WORKSHOP MANUAL

TROOPER
(UX)

FOREWORD

This manual includes special notes, important points, service data, precautions, etc. that are needed for the maintenance, adjustments, service, removal and installation of vehicle components.

All information, illustrations and specifications contained in this manual are based on the latest product information available at the time of publication.

All rights are reserved to make changes at any time without notice.

Arrangement of the material is shown in the table of contents on the right-hand side of this page. A black spot on the first page of each section can be seen on the edge of the book below each section title. These point to a more detailed table of contents preceding each section.

This manual applies to 2000 models.

SECTION	TABLE OF CONTENTS
	GENERAL INFORMATION
0A	General Information
0B	Maintenance and Lubrication
	HEATING, VENTILATION AND AIR CONDITIONING
1A	HVAC Systems
	STEERING
2A	Power Assisted System
	SUSPENSION
3C	Front Suspension
3D	Rear Suspension
3E	Wheel and Tire System
	DRIVELINE/AXLE
4A1	Differential (Front)
4A2	Differential (Rear)
4B1	Driveline Control System (SHIFT ON THE FLY)
4B2	Driveline Control System (TOD)
4C	Drive Shaft System
4D1	Transfer Case (Standard Type)
4D2	Transfer Case (TOD)
	BRAKE
5A	Brake Control System
5B	Anti-Lock Brake System
5C	Power-Assisted Brake System
5D	Parking Brake System
	ENGINE
6A	Engine Mechanical
6B	Engine Cooling
6C	Engine Fuel
6D1	Engine Electrical
6D2	Ignition System
6D3	Starting and Charging System
6E	Driveability and Emissions
6F	Engine Exhaust
6G	Engine Lubrication
6H	Engine Speed Control System
6J	Induction
	TRANSMISSION
7A	Automatic Transmission
7A1	Transmission Control System
7B	Manual Transmission
7C	Clutch
	BODY AND ACCESSORIES
8A	Lighting System
8B	Wiper/Washer System
8C	Entertainment
8D	Wiring System
8E	Meter and Gauge
8F	Body Structure
8G	Seats
8H	Security and Locks
8I	Sun Roof/Convertible Top
8J	Exterior/Interior Trim
	RESTRAINTS
9A	Seat Belt System
9J	Supplemental Restraint System (SRS)
9J1	Restraint Control System
	CONTROL SYSTEM
10A	Cruise Control System

Downloaded from www.Manualslib.com manuals search engine

TROOPER

GENERAL INFORMATION

CONTENTS

General Information 0A
Maintenance and Lubrication 0B

GENERAL INFORMATION

CONTENTS

General Repair Instruction 0A–1
Illustration Arrows 0A–2
Identification 0A–3
Theft Prevention Standard 0A–5
Lifting Instructions 0A–10
Standard Bolts Torque Specifications 0A–13
Abbreviations Charts 0A–14
Service Parts Identification Plate 0A–15

General Repair Instruction

1. If a floor jack is used, the following precautions are recommended.

   Park vehicle on level ground, “block” front or rear wheels, set jack against the recommended lifting points (see “Lifting Instructions” in this section), raise vehicle and support with chassis stands and then perform the service operations.
2. Before performing service operations, disconnect ground cable from the battery to reduce the chance of cable damage and burning due to short circuiting.
3. Use a cover on body, seats and floor to protect them against damage and contamination.
4. Brake fluid and anti–freeze solution must be handled with reasonable care, as they can cause paint damage.
5. The use of proper tools and recommended essential and available tools, where specified, is important for efficient and reliable performance of service repairs.
6. Use genuine Isuzu parts.
7. Used cotter pins, plastic clips, gaskets, O–rings, oil seals, lock washers and self–locking nuts should be discarded and new ones should be installed, as normal function of the parts cannot be maintained if these parts are reused.
8. To facilitate proper and smooth reassembly operation, keep disassembled parts neatly in groups. Keeping fixing bolts and nuts separate is very important, as they vary in hardness and design depending on position of installation.
9. Clean the parts before inspection or reassembly. Also clean oil ports, etc. using compressed air, and make certain they are free from restrictions.
10. Lubricate rotating and sliding faces of the parts with oil or grease before installation.
11. When necessary, use a sealer on gaskets to prevent leakage.
12. Carefully observe all specifications for bolt and nut torques.
13. When removing or replacing parts that require refrigerant to be discharged from the air conditioning system, be sure to use the Vehicle Refrigerant Recovery and Recycling Equipment (VRRRE) to recover and recycle Refrigerant–134a.
14. When a service operation is completed, make a final check to be sure the service has been done properly and the problem has been corrected.
15. SUPPLEMENTAL RESTRAINT SYSTEM

    The vehicle is equipped with a Supplemental Restraint System. (SRS)—Air Bag.

    This system is not to be serviced without consulting the appropriate service information.

    Consult Sections 9J1 and 9J “SRS System” if work is to be done on the front of the vehicle such as bumper, sheet metal, seats, wiring, steering wheel or column.

    Also review SRS system information if any arc welding is to be done on the vehicle.

    The SRS system equipped vehicle can be identified by:

    1. “AIR BAG” warning light on the instrument panel.
    2. A Code “J” or “K” for fifth digit of vehicle Identification Number.

Downloaded from www.Manualslib.com manuals search engine

Illustration Arrows

Arrows are designed for specific purposes to aid your understanding of technical illustrations.

Arrow Type	Application
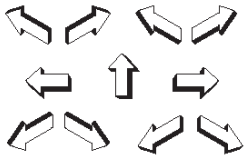	Front of vehicle
	Up Side
	Task Related
	View Detall
	View Angle
	Dimension (1:2)
	Sectioning (1:3)

Arrow Type	Application
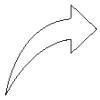	• Ambient/Clean air flow • Cool air flow
	• Gas other than ambient air • Hot air flow
	• Ambient air mixed with another gas • Can indicate temperature change
	Motion or direction
	Lubrication point oil or fluid
	Lubrication point grease
	Lubrication point jelly

Downloaded from www.Manualslib.com manuals search engine

Identification

Vehicle Identification Number (VIN)

This is the legal identification of the vehicle. it is located on the left bottom of the windshield. It can be easily seen through the windshield from outside the vehicle.

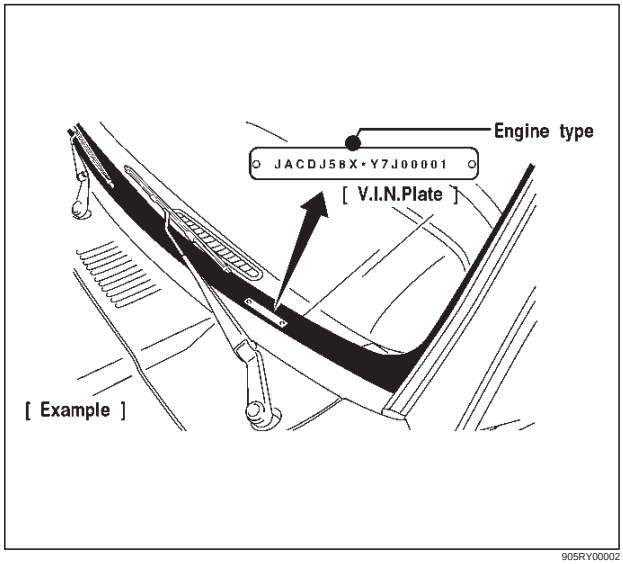

905RY00002

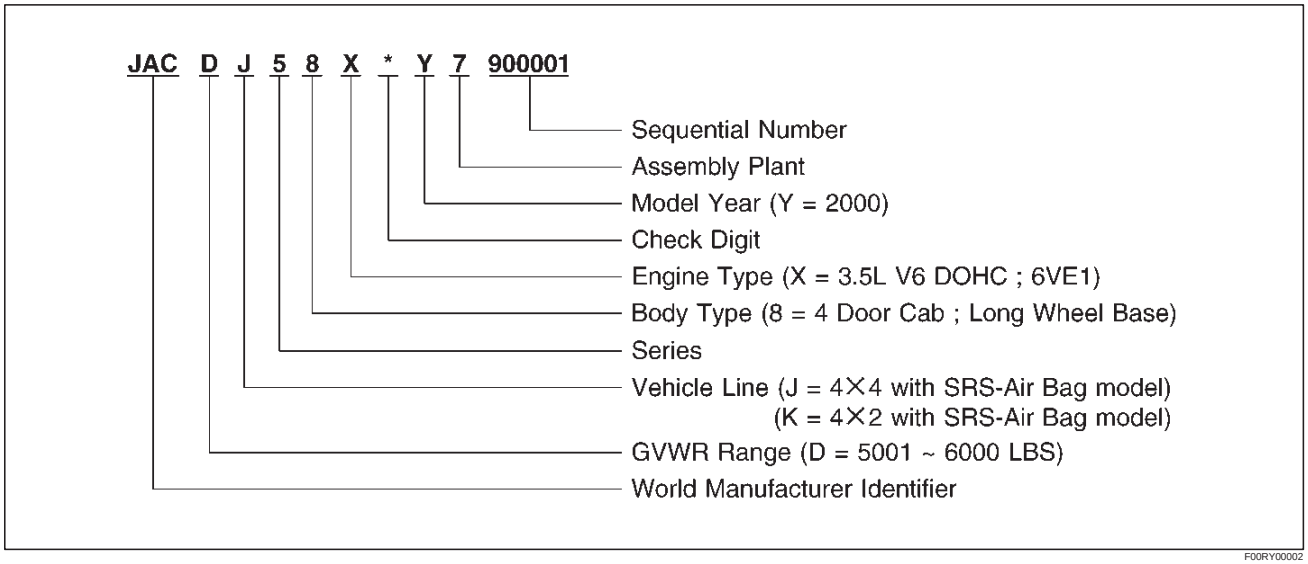

F00RY00002

Downloaded from www.Manualslib.com manuals search engine

Engine Serial Number

The gasoline engine serial number is stamped on the left rear lower area of the cylinder block above the starter.

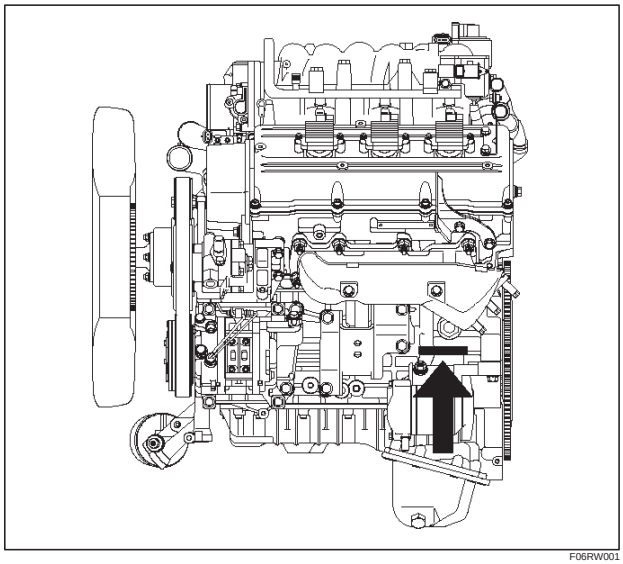

F06RW001

Transmission Serial Number

Manual : Stamped on the left side of the transmission intermediate plate.

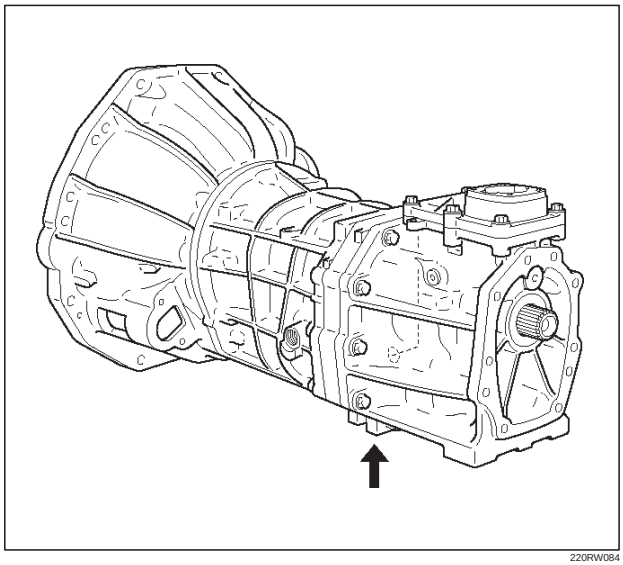

220RW084

Automatic : Stamped on the identification plate, located on the left side of the transmission above the mode switch.

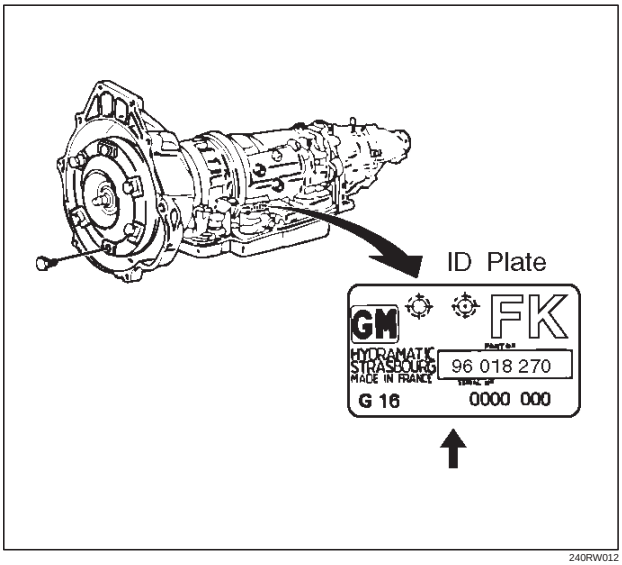

240RW012

Downloaded from www.Manualslib.com manuals search engine

Theft Prevention Standard

The 11 major components listed below will be marked with 17 digit V.I.N. at the stage of production. In addition its service parts will be marked with manufacturer's trade mark, "R" mark and "DOT" mark.

Reference Figure No.	COMPONENT		INDICATION	
			PRODUCTION	SERVICE PARTS
0A-10	ENGINE	1– 6VE1	V.I.N. plate	"R DOT" Mark stamping
0A-11	TRANSMISSION	2– Manual transmission – Automatic transmission	V.I.N. plate	"R DOT" Mark stamping
0A-11	BODY	3– Engine hood 4– Front door 5– Rear door 6– Fender 7– Rear Quarter panel 8– Front bumper 9– Back door left side 10– Back door right side 11– Rear bumper	V.I.N. label	"R DOT" Mark label

Anti Theft Stamping/Plate/Label

	STAMPING/PLATE	LABEL
PRODUCTION	Example JACDJ58X*Y7900001	Example JACDJ58X*Y7900001
SERVICE PARTS	R DOT	R DOT

Downloaded from www.Manualslib.com manuals search engine

Anti Theft Stamping/Label/Plate Location

The stamping, label and plate locations are indicated by arrows in the illustration below.

NOTE:

A. VIN plate locations for production.

B. Stamping locations for service parts.

Engine

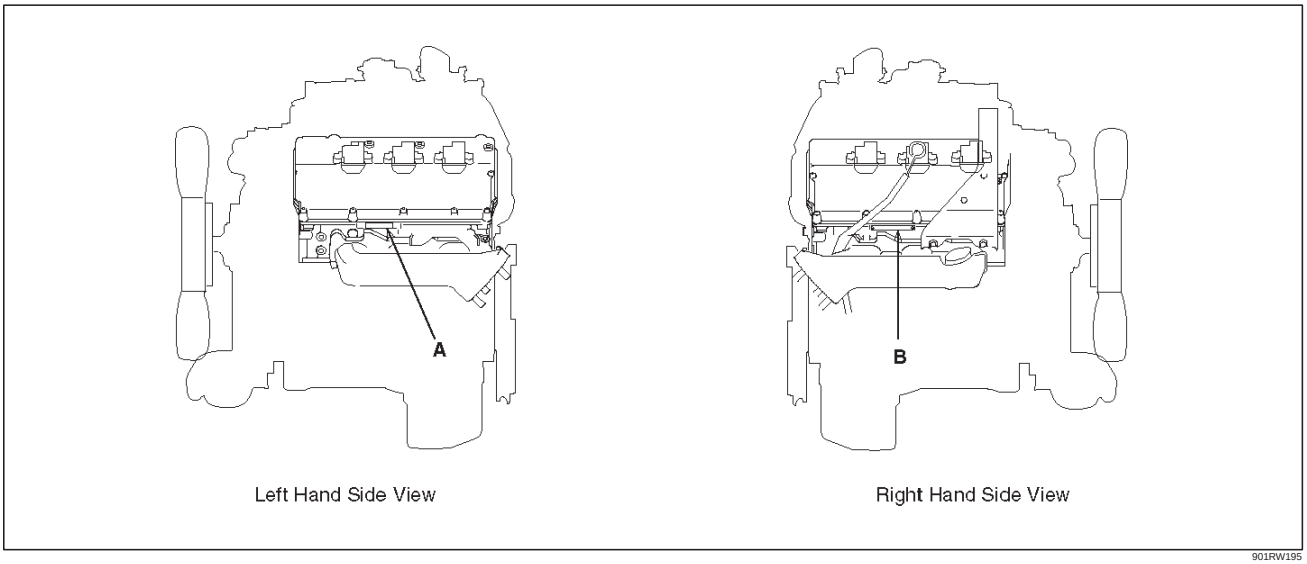

901RW195

Manual Transmission (AR–5)

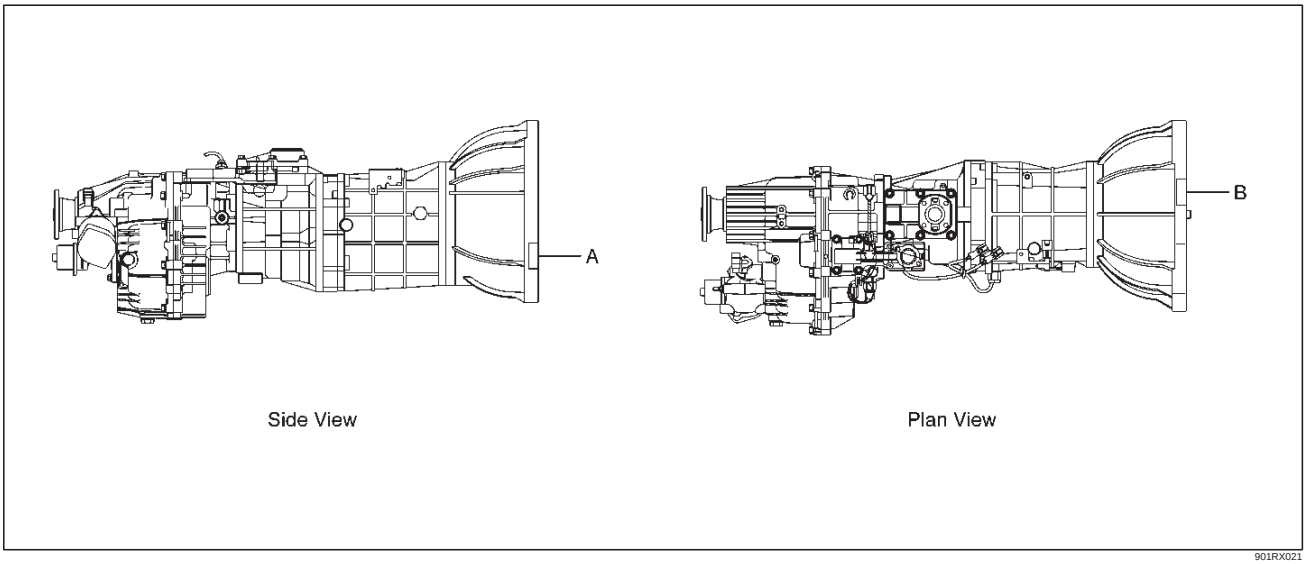

901RX021

Downloaded from www.Manualslib.com manuals search engine

Automatic Transmission (THM)

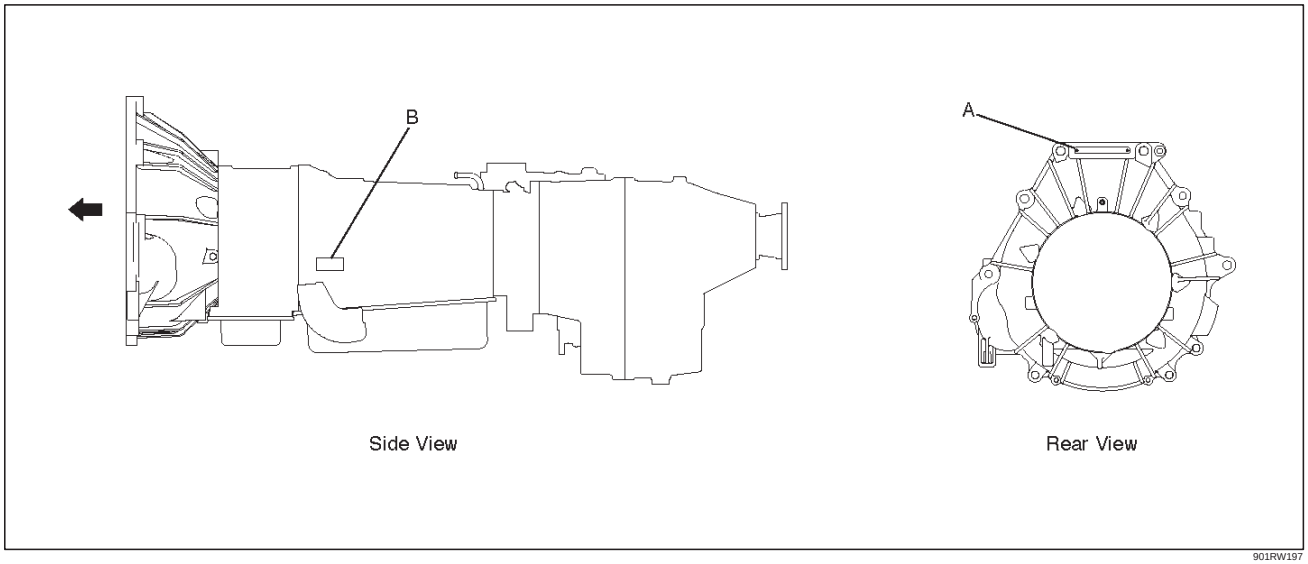

901RW197

Body

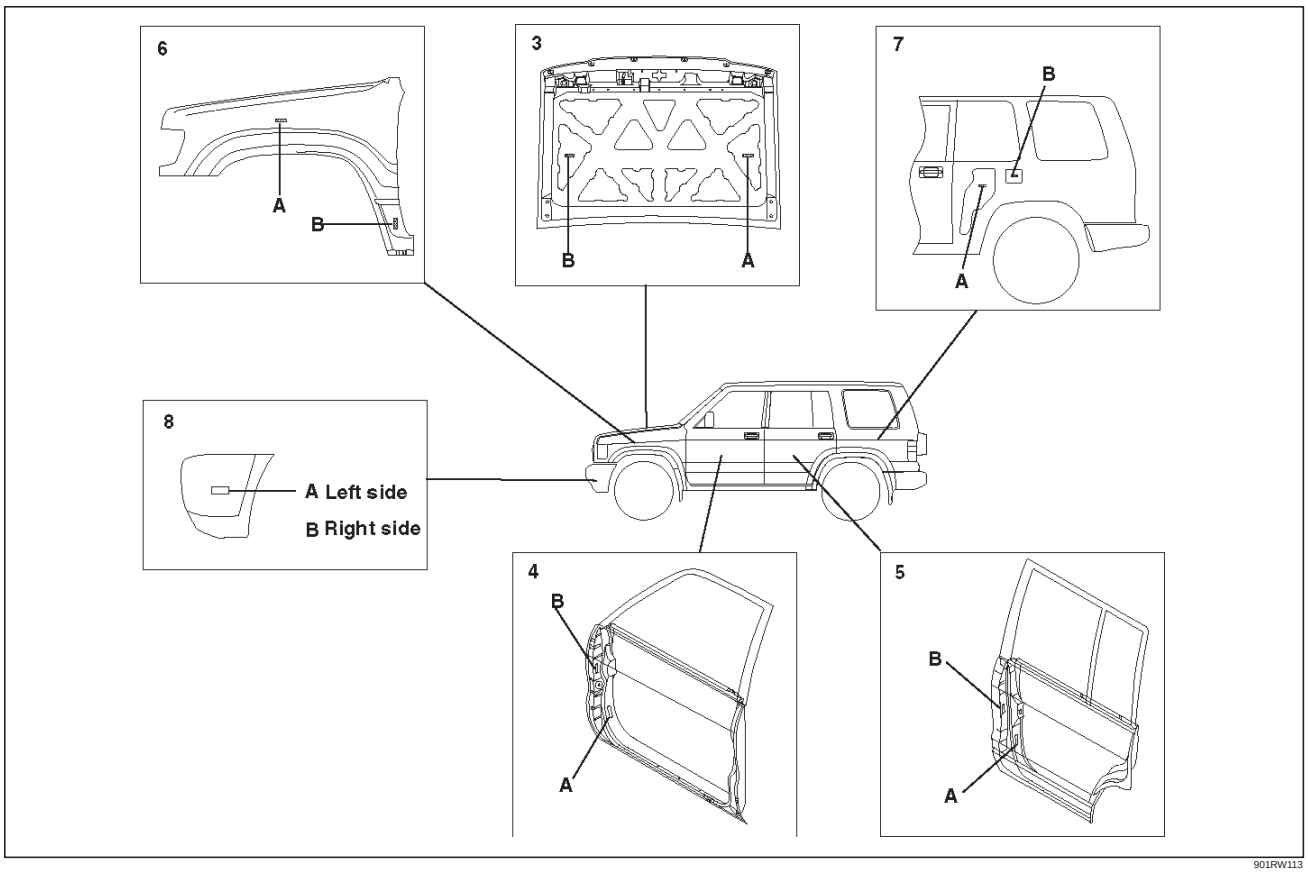

901RW113

Legend

(3) Engine Hood
(4) Front Door
(5) Rear Door
(6) Fender
(7) Rear Quarfer Panel
(8) Front Bumper

Downloaded from www.Manualslib.com manuals search engine

Body

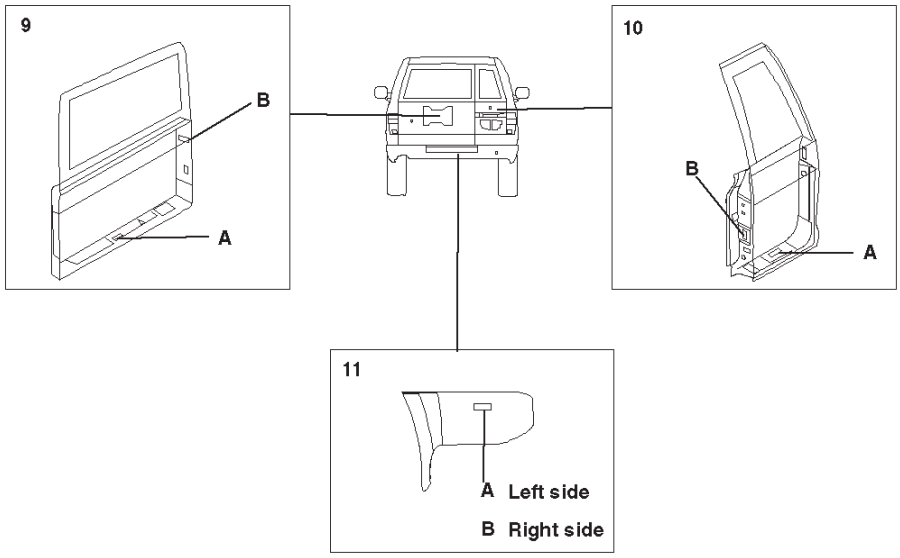

901RW114

Legend

(9) Back Door Left Side
(10) Back Door Right Side
(11) Rear Bumper

Downloaded from www.Manualslib.com manuals search engine

Body Label Instructions

Do not peel off the masking tape until completion of paint work when replacing these parts, as the tape is affixed on the label attached to service parts for body of the anti–theft component.

NOTE: Be sure to pull off the masking tape after paint work has been completed.

Do not attempt to remove this label for any reason.

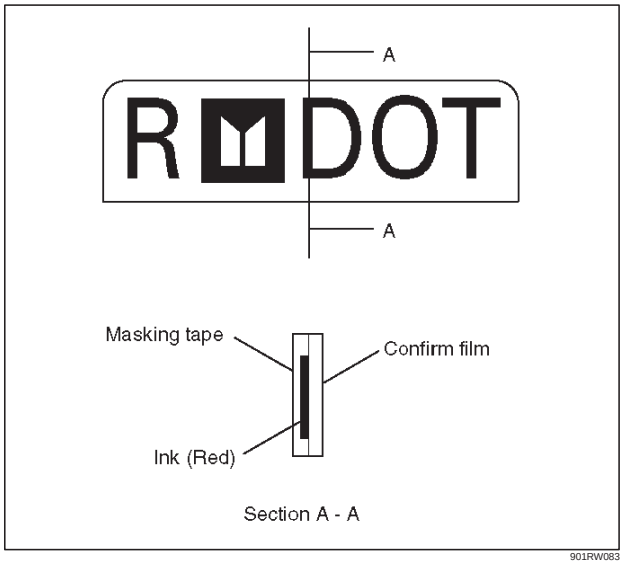

901RW083

Precautions in pulling off the masking tape

1. Use only your finger nail or a similar blunt instrument to peel off the masking tape. Use of a sharp object will damage the underlying anti–theft label.
2. Be careful not to damage the paint around the label.

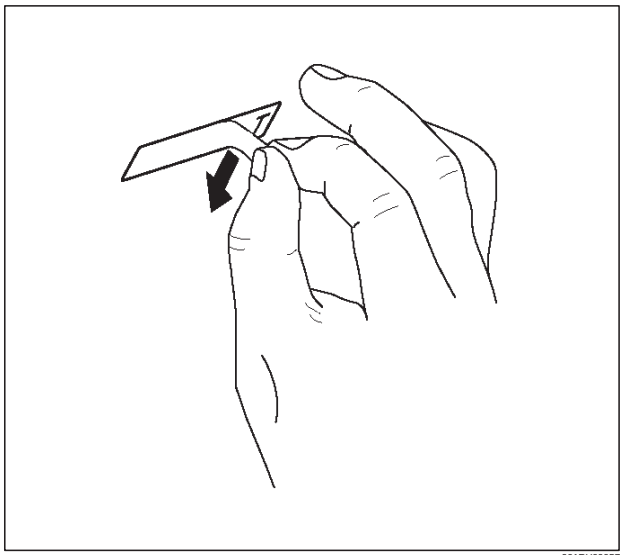

901RY00057

Downloaded from www.Manualslib.com manuals search engine

Lifting Instructions

CAUTION:

- If a lifting device other than the original jack is used, it is most important that the device be applied only to the correct lifting points. Raising the vehicle from any other point may result in serious damage.
- When jacking or lifting a vehicle at the frame side rail or other prescribed lift points, be certain that lift pads do not contact the catalytic converter, brake pipes or cables, or fuel lines. Such contact may result in damage or unsatisfactory vehicle performance.

Lifting Points and Supportable Point Locations

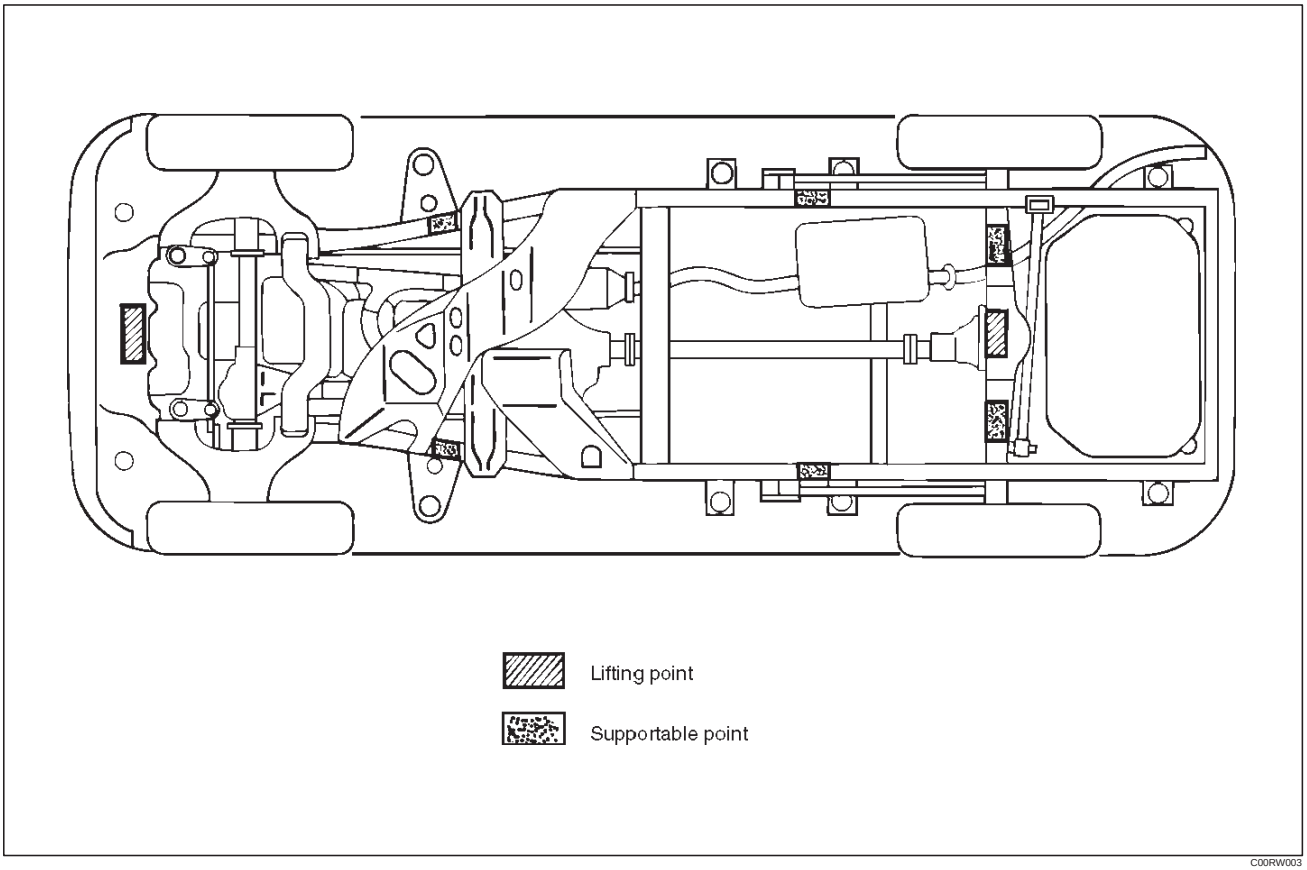

C00RW003

Downloaded from www.Manualslib.com manuals search engine

Lifting Point; Front

- When using a floor jack, lift on the center of the skid plate.

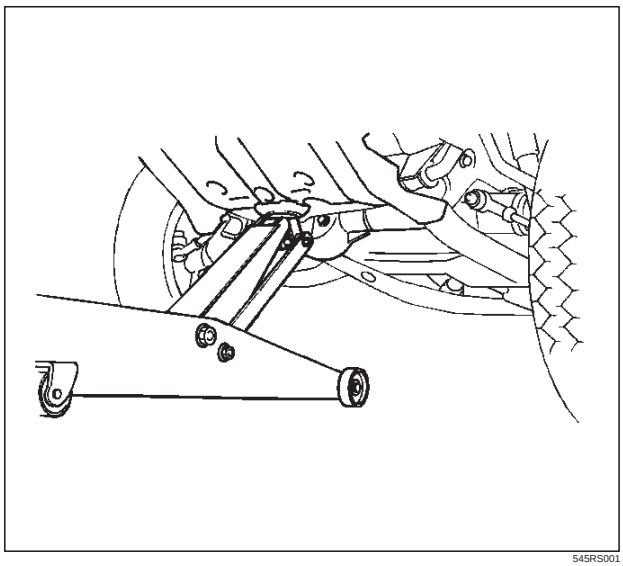

545RS001

Supportable Point; Front

- Position the chassis stands at the bottom of the frame sidemember, behind the front wheel.

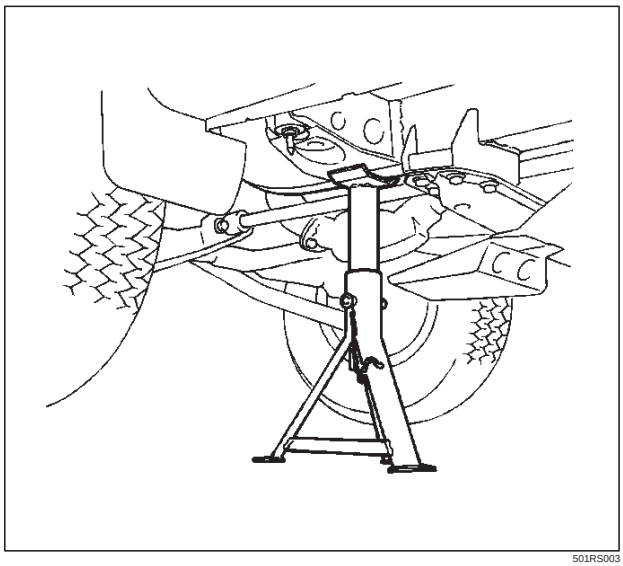

501RS003

Lifting Point; Rear

- Position the floor jack at the center of the rear axle case when lifting the vehicle.

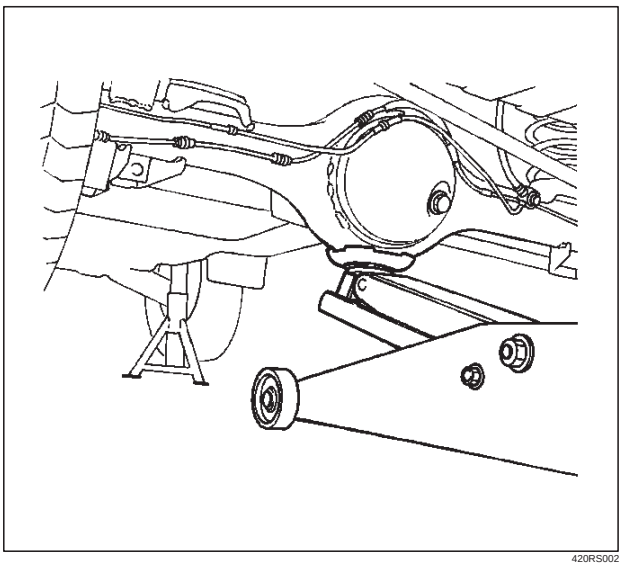

420RS002

Supportable Point; Rear

- Position the chassis stands at the bottom of the frame sidemember, just behind the trailing link bracket.

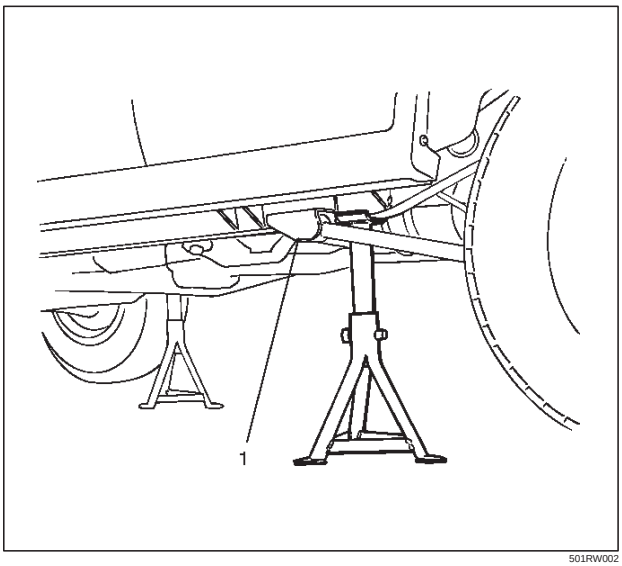

501RW002

Legend

(1) Trailing Link Bracket

Downloaded from www.Manualslib.com manuals search engine

Supportable Point; Rear

- Position the chassis stands at the bottom of the rear axle case.

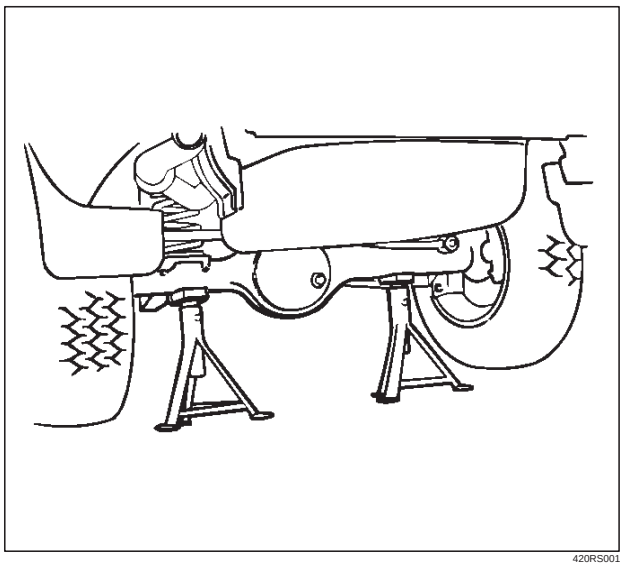

420RS001

Downloaded from www.Manualslib.com manuals search engine

Standard Bolts Torque Specifications

The torque values given in the following table should be applied where a particular torque is not specified.

Strength Class	4.8	8.8		9.8
		Refined	Non-Refined	
Bolt Identification				
	No mark			
Bolt Diameter × Pitch (mm)				
M 6X1.0	4—8 (3—6)	5—10 N·m (4—7 lb ft)		—
M 8X1.25	8—18 N·m (6—13 lb ft)	12—23 N·m (9—17 lb ft)		17—30 N·m (12—22 lb ft)
M 10X1.25	21—34 N·m (15—25 lb ft)	28—46 N·m (20—34 lb ft)		37—63 N·m (27—46 lb ft)
* M10X1.5	20—33 N·m (14—25 lb ft)	28—45 N·m (20—33 lb ft)		36—60 N·m (27—44 lb ft)
M12X1.25	49—74 N·m (36—54 lb ft)	61—91 N·m (45—67 lb ft)		76—114 N·m (56—84 lb ft)
* M12X1.75	45—69 N·m (33—51 lb ft)	57—84 N·m (42—62 lb ft)		72—107 N·m (53—79 lb ft)
M14X1.5	77—115 N·m (56—85 lb ft)	93—139 N·m (69—103 lb ft)		114—171 N·m (84—126 lb ft)
* M14X2.0	72—107 N·m (53—79 lb ft)	88—131 N·m (65—97 lb ft)		107—160 N·m (79—118 lb ft)
M16X1.5	104—157 N·m (77—116 lb ft)	135—204 N·m (100—150 lb ft)		160—240 N·m (118—177 lb ft)
* M16X2.0	100—149 N·m (74—110 lb ft)	130—194 N·m (95—143 lb ft)		153—230 N·m (113—169 lb ft)
M18X1.5	151—226 N·m (111—166 lb ft)	195—293 N·m (144—216 lb ft)		230—345 N·m (169—255 lb ft)
M20X1.5	206—310 N·m (152—229 lb ft)	270—405 N·m (199—299 lb ft)		317—476 N·m (234—351 lb ft)
M22X1.5	251—414 N·m (185—305 lb ft)	363—544 N·m (268—401 lb ft)		425—637 N·m (313—469 lb ft)
M24X2.0	359—539 N·m (265—398 lb ft)	431—711 N·m (318—524 lb ft)		554—831 N·m (409—613 lb ft)

The asterisk * indicates that the bolts are used for female–threaded parts that are made of soft materials such as casting, etc.

Downloaded from www.Manualslib.com manuals search engine

Abbreviations Charts

List of automotive abbreviations which may be used in this manual

A — Ampere(s)
ABS — Antilock Brake System
AC — Alternating Current
A/C — Air Conditioning
ACCEL — Accelerator
ACC — Accessory
ACL — Air Cleaner
Adj — Adjust
A/F — Air Fuel Ratio
AIR — Secondary Air Injection System
Alt — Altitude
AMP — Ampere(s)
ANT — Antenna
ASM — Assembly
A/T — Automatic Transmission/Transaxle
ATDC — After Top Dead Center
ATF — Automatic Transmission Fluid
Auth — Authority
Auto — Automatic
BARO — Barometric Pressure
Bat — Battery
B+ — Battery Positive Voltage
Bbl — Barrel
BHP — Brake Horsepower
BPT — Backpressure Transducer
BTDC — Before Top Dead Center
° C — Degrees Celsius
CAC — Charge Air Cooler
Calif — California
cc — Cubic Centimeter
CID — Cubic Inch Displacement
CKP — Crankshaft Position
CL — Closed Loop
CLCC — Closed Loop Carburetor Control
CMP — Camshaft Position
CO — Carbon Monoxide
Coax — Coaxial
Conn — Connector
Conv — Converter
Crank — Crankshaft
Cu. In. — Cubic Inch
CV — Constant Velocity
Cyl — Cylinder(s)
DI — Distributor Ignition
Diff — Differential
Dist — Distributor
DLC — Data Link Connector
DOHC — Double Overhead Camshaft
DTC — Diagnostic Trouble Code
DTM — Diagnostic Test Mode
DTT — Diagnostic Test Terminal
DVM — Digital Voltmeter (10 meg.)
DVOM — Digital Volt Ohmmeter
EBCM — Electronic Brake Control Module
ECM — Engine Control Module
ECT — Engine Coolant Temperature
EEPROM — Electronically Erasable Programmable Read Only Memory
EGR — Exhaust Gas Recirculation
EI — Electronic Ignition
ETR — Electronically Tuned Receiver
EVAP — Evaporation Emission
Exh — Exhaust
° F — Degrees Fahrenheit
Fed — Federal (All States Except Calif.)
FF — Front Drive Front Engine
FL — Fusible Link
FLW — Fusible Link Wire
FP — Fuel Pump
FRT — Front
ft — Foot
FWD — Front Wheel Drive
4WD — Four Wheel Drive
4 x 4 — Four Wheel Drive
4 A/T — Four Speed Automatic Transmission/Transaxle
Gal — Gallon
GEN — Generator
GND — Ground
Gov — Governor
g — Gram
Harn — Harness
HC — Hydrocarbons
HD — Heavy Duty
Hg — Hydrargyrum (Mercury)
HiAlt — High Altitude
HO2S — Heated Oxygen Sensor
HVAC — Heater–Vent–Air–Conditioning
IAC — Idle Air Control
IAT — Intake Air Temperature
IC — Integrated Circuit / Ignition Control
ID — Identification / Inside Diameter
IGN — Ignition
INJ — Injection
IP — Instrument Panel
IPC — Instrument Panel Cluster
Int — Intake
ISC — Idle Speed Control
J/B — Junction Block
kg — Kilograms
km — Kilometers
km/h — Kilometer per Hour
kPa — Kilopascals
kV — Kilovolts (thousands of volts)
kW — Kilowatts
KS — Knock Sensor
L — Liter
lb ft — Foot Pounds
lb in — Inch Pounds
LF — Left Front
LH — Left Hand
LR —Left Rear
LS — Left Side
LWB — Long Wheel Base
L–4 — In–Line Four Cylinder Engine
MAF — Mass Air Flow
MAN — Manual
MAP — Manifold Absolute Pressure
Max — Maximum
MC — Mixture Control
MFI — Multiport Fuel Injection
MIL — Malfunction Indicator Lamp
Min — Minimum
mm — Millimeter
MPG — Miles Per Gallon
MPH — Miles Per Hour
M/T — Manual Transmission/Transaxle
MV — Millivolt

Downloaded from www.Manualslib.com manuals search engine

N — Newtons
NA — Natural Aspirated
NC — Normally Closed
N·M — Newton Meters
NO — Normally Open
NOX — Nitrogen, Oxides of
OBD — On-Board Diagnostic
OD — Outside Diameter
O/D — Over Drive
OHC — Overhead Camshaft
OL — Open Loop
O2 — Oxygen
O2S — Oxygen Sensor
PAIR — Pulsed Secondary Air Injection System
P/B — Power Brakes
PCM — Powertrain Control Module
PCV — Positive Crankcase Ventilation
PRESS — Pressure
PROM — Programmable Read Only Memory
PNP — Park/Neutral Position
P/S — Power Steering
PSI — Pounds per Square Inch
PSP — Power Steering Pressure
Pt. — Pint
Pri — Primary
PWM — Pulse Width Modulate
Qt. — Quart
REF — Reference
RF — Right Front
RFI — Radio Frequency Interference
RH — Right Hand
RPM — Revolutions Per Minute
RPM Sensor — Engine Speed Sensor
RPO — Regular Production Option
RR — Right Rear
RS — Right Side
RTV — Room Temperature Vulcanizing
RWAL — Rear Wheel Antilock Brake
RWD — Rear Wheel Drive
SAE — Society of Automotive Engineers
Sec — Secondary
SFI — Sequential Multiport Fuel Injection
SI — System International
SIR — Supplemental Inflatable Restraint System
SOHC — Single Overhead Camshaft
Sol — Solenoid
SPEC — Specification
Speedo — Speedometer
SRS — Supplemental Restraint System
ST — Start / Scan Tool
Sw — Switch
SWB — Short Wheel Base
SYN — Synchronize
Tach — Tachometer
TB — Throttle Body
TBI — Throttle Body Fuel Injection
TCC — Torque Converter Clutch
TCM — Transmission Control Module
TDC — Top Dead Center
Term — Terminal
TEMP — Temperature
TOD— Torque On Demand
TP — Throttle Position
TRANS — Transmission/Transaxle
TURBO — Turbocharger
TVRS — Television & Radio Suppression
TVV — Thermal Vacuum Valve
TWC — Three Way Catalytic Converter
3 A/T — Three Speed Automatic Transmission/Transaxle
2WD — Two Wheel Drive
4 x 2 — Two Wheel Drive
U–joint — Universal Joint
V — Volt(s)
VAC — Vacuum
VIN — Vehicle Identification Number
VRRRE — Vehicle Refrigerant Recovery and Recycling Equipment
V–ref — ECM Reference Voltage
VSS — Vehicle Speed Sensor
VSV — Vacuum Switch Valve
V–6 — Six Cylinder “V” Engine
V–8 — Eight Cylinder ”V” Engine
W — Watt(s)
w/ — With
w/b — Wheel Base
w/o — Without
WOT — Wide Open Throttle

Service Parts Identification Plate

The Vehicle Information Plate (Service Parts ID plate) is provided on all vehicle models.
It is located on the center dash wall inside the engine compartment. The plate lists the VIN (Vehicle Identification Number), paint information and all production options and special equipment on the vehicle when it was shipped from the factory.

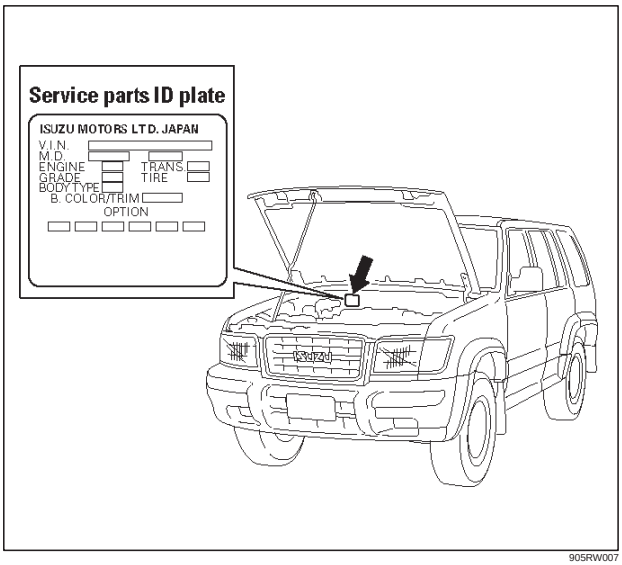

905RW007

Downloaded from www.Manualslib.com manuals search engine

TROOPER

GENERAL INFORMATION

MAINTENANCE AND LUBRICATION

CONTENTS

Maintenance Schedule List 0B–1
Explanation of Complete Vehicle Maintenance Schedule 0B–5
Recommended Fluids and Lubricants 0B–8
Lubricant Viscosity Chart 0B–9
Recommended Liquid Gasket 0B–11
Recommended Thread Locking Agents . . . 0B–12
Maintenance Service Data 0B–13

Maintenance Schedule List

Normal Vehicle Use

The maintenance instructions in this Maintenance Schedule are based on the assumption that the vehicle will be used as designed:

- to carry passengers and cargo within the limitations specified on the tire placard located on the inside of the glove compartment door;
- to be driven on reasonable road surfaces within legal operating limits;
- to be driven on a daily basis, as a general rule, for at least several miles/kilometers;
- to be driven on unleaded fuel

Unusual or severe operating conditions will require more frequent vehicle maintenance, as specified in the following sections.

Severe Driving Conditions

If the vehicle is usually operated under any of the severe driving conditions listed below, it is recommended that the applicable maintenance services be performed at the specified interval shown in the chart below.

Severe driving conditions:

- Towing a trailer, using a camper or car top carrier.
- Repeated short trips of less than 8 km (5 miles) with outside temperature remaining below freezing.
- Extensive idling and/or low speed driving for long distances, such as police, taxi or door-to-door delivery use.
- Operating on dusty, rough, muddy or salt spread roads.

ITEMS	INTERVAL
REPLACE TIMING BELT	Every 75,000 miles (120,000 km)
CHANGE ENGINE OIL AND OIL FILTER	Every 3,000 miles (4,800 km) or 3 months
CHANGE AUTOMATIC TRANSMISSION FLUID	Every 20,000 miles (32,000 km)
CHANGE FRONT AND REAR AXLE OIL	Every 15,000 miles (24,000 km)
CHANGE POWER STEERING FLUID	Every 30,000 miles (48,000 km)

Downloaded from www.Manualslib.com manuals search engine

Mileage Only Items

	MILEAGE ONLY ITEMS	7.5	15	22.5	30	37.5	45	52.5	60	67.5	75	82.5	90	97.5	105	112.5	120	DESCRIPTION
1	CHANGE FRONT AND REAR AXLE OIL		▒		▒				▒				▒				▒	
2	CHANGE MANUAL TRANSMISSION OIL		▒		▒				▒				▒				▒	
3	• CHECK AND ADJUST OR CHANGE AUTOMATIC TRANSMISSION FLUID (IF NECESSARY)																▒	
4	CHECK AUTOMATIC TRANSMISSION FLUID LEAKAGE		▒		▒		▒		▒		▒		▒		▒		▒	
5	CHANGE TRANSFER CASE OIL		▒		▒				▒				▒				▒	
6	CHECK EXTENSION OIL LEVEL (2WD ONLY)		▒		▒				▒				▒				▒	
7	• REPLACE AIR CLEANER FILTER				▒				▒				▒				▒	
8	REPLACE SPARK PLUGS	Replace every 100,000 miles																
9	CHANGE ENGINE COOLANT				▒				▒				▒				▒	
10	*(1) REPLACE TIMING BELT	Replace every 100,000 miles																
11	CHECK AND ADJUST VALVE CLEARANCE (IF NECESSARY)	If noisy																
12	ROTATE TIRES	▒	▒	▒	▒	▒	▒	▒	▒	▒	▒	▒	▒	▒	▒	▒	▒	
13	REPACK FRONT WHEEL BEARINGS				▒				▒				▒				▒	
14	CLEAN RADIATOR CORE AND A/C CONDENSER								▒								▒	

*(1) : Replacement of the timing belt is recommended at every 100,000 miles (160,000 km).

• : UNDER SEVERE DRIVING CONDITIONS, MORE FREQUENT MAINTENANCE IS REQUIRED. REFER TO "SCHEDULED MAINTENANCE UNDER SEVERE DRIVING CONDITIONS".

SHADED AREA INDICATES SERVICE TO BE PERFORMED.

Downloaded from www.Manualslib.com manuals search engine

Mileage/Months

	MILEAGE/MONTHS whichever comes first	EVERY MONTHS	IN THOUSANDS OF MILES (USE ODOMETER READING) (x 1000 miles)																DESCRIPTION
			7.5	15	22.5	30	37.5	45	52.5	60	67.5	75	82.5	90	97.5	105	112.5	120	
1	CHECK BATTERY FLUID LEVEL	12	■	■	■	■	■	■	■	■	■	■	■	■	■	■	■	■	
2	CHECK ENGINE COOLANT LEVEL	12	■	■	■	■	■	■	■	■	■	■	■	■	■	■	■	■	
3	CHECK BRAKE AND CLUTCH FLUID LEVEL	12	■	■	■	■	■	■	■	■	■	■	■	■	■	■	■	■	
4	CHECK FLUID LEAKS	12	■	■	■	■	■	■	■	■	■	■	■	■	■	■	■	■	
5	• CHANGE ENGINE OIL	12	■	■	■	■	■	■	■	■	■	■	■	■	■	■	■	■	
6	• REPLACE ENGINE OIL FILTER	12	■	■	■	■	■	■	■	■	■	■	■	■	■	■	■	■	
7	CHECK COOLING AND HEATER HOSES	12		■		■		■		■		■		■		■		■	
8	*(2) CHECK EXHAUST SYSTEM	12	■	■	■	■	■	■	■	■	■	■	■	■	■	■	■	■	
9	*(2) CHECK FUEL LINE AND FUEL TANK/CAP	12								■								■	
10	CHECK ENGINE DRIVE BELT	24				■				■				■				■	
11	CHECK TIRES AND WHEELS	12	■	■	■	■	■	■	■	■	■	■	■	■	■	■	■	■	
12	CHECK STEERING OPERATION	12	■	■	■	■	■	■	■	■	■	■	■	■	■	■	■	■	
13	CHECK BRAKE LINES AND HOSE	12	■	■	■	■	■	■	■	■	■	■	■	■	■	■	■	■	
14	CHECK DISC BRAKES	12		■		■		■		■		■		■		■		■	
15	CHECK BRAKE PEDAL PLAY	12		■		■		■		■		■		■		■		■	
16	CHECK PARKING BRAKE	12		■		■		■		■		■		■		■		■	
17	LUBE ACCELERATOR LINKAGE	6	■	■	■	■	■	■	■	■	■	■	■	■	■	■	■	■	
18	CHECK SUSPENSION AND STEERING	12		■		■		■		■		■		■		■		■	
19	• CHECK POWER STEERING FLUID LEVEL	6	■	■	■	■	■	■	■	■	■	■	■	■	■	■	■	■	

*(2); This service is recommended for vehicles sold in California, and it is required for vehicles sold in other areas.

• UNDER SEVERE DRIVING CONDITIONS, ADDITIONAL MAINTENANCE IS REQUIRED. REFER TO "MAINTENANCE SCHEDULE UNDER SEVERE DRIVING CONDITIONS" LATER IN THIS SECTION

SHADED AREA INDICATES SERVICE TO BE PERFORMED.

Downloaded from www.Manualslib.com manuals search engine

	MILEAGE/MONTHS whichever comes first	EVERY MONTHS	IN THOUSANDS OF MILES (USE ODOMETER READING) (x 1000 miles)																
			7.5	15	22.5	30	37.5	45	52.5	60	67.5	75	82.5	90	97.5	105	112.5	120	DESCRIPTION
20	LUBE BODY AND CHASSIS	6																	
21	*LUBE FRONT PROPELLER SHAFT	6																	
22	LUBE REAR PROPELLER SHAFT	6																	
23	CHECK PROPELLER SHAFT FLANGE TORQUE	12																	
24	CHECK SHIFT ON THE FLY SYSTEM GEAR OIL	12																	
25	CHECK AUTO CRUISE CONTROL LINKAGE AND HOSES	12																	
26	CHECK CLUTCH LINES AND HOSE	12																	
27	LUBE CLUTCH PEDAL SPRING, BUSHING AND CLEVIS PIN	6																	
28	CHECK CLUTCH PEDAL FREE PLAY	12																	
29	CHECK STARTER SAFETY SWITCH	12																	
30	CHECK ACCELERATOR LINKAGE	12																	
31	LUBE KEY LOCK CYLINDER	12																	

* Except TOD system model

- UNDER SEVERE DRIVING CONDITIONS, ADDITIONAL MAINTENANCE IS REQUIRED. REFER TO "MAINTENANCE SCHEDULE UNDER SEVERE DRIVING CONDITIONS" LATER IN THIS SECTION

SHADED AREA INDICATES SERVICE TO BE PERFORMED.

Downloaded from www.Manualslib.com manuals search engine

Explanation of Complete Vehicle Maintenance Schedule

Brief explanations of the services listed in the preceding Maintenance Scheduled are presented below.
Replace all questionable parts and note any necessary repairs as you perform these maintenance procedures.

Front and Rear Axle Lubricant Replacement

Replace the front and rear axle lubricant at 15,000 miles (24,000 km) and 30,000 miles (48,000 km) and after every 30,000 miles (48,000 km) or operation thereafter.

Manual Transmission Lubricant Replacement

Replace the transmission lubricant at 15,000 miles (24,000 km) and 30,000 miles (48,000 km) and after every 30,000 miles (48,000 km) of operation thereafter.

Automatic Transmission Fluid Replacement

Check the fluid leakage at 15,000 miles (24,000 km) and 30,000 miles (48,000 km) and after every 15,000 miles (24,000 km) or operation thereafter.
Replace the transmission fluid at 120,000 miles (192,000 km) of operation thereafter.

Transfer Case Lubricant Replacement

Replace the transfer case lubricant at 15,000 miles (24,000 km) and 30,000 miles (48,000 km) and after every 30,000 miles (48,000 km) of operation thereafter.

Extension Lubricant Level Check (2WD only)

Check oil level at 15,000 miles (24,000 km) and 30,000 miles (48,000 km) and after every 30,000 miles (48,000 km) or operation thereafter.

Air Cleaner Element Replacement

Replace the air cleaner under normal operating conditions every 30,000 miles (48,000 km).
Operation of the vehicle in dusty areas will necessitate more frequent replacement.

Spark Plug Replacement

Replace the plugs at 100,000 miles (160,000 km) intervals with the type specified at the end of this section.

Cooling System Service

Drain, flush and refill system with new engine coolant. Refer to “Recommended Fluids and Lubricants” in this section, or ENGINE COOLING (SEC.6B).

Timing Belt Replacement

Replacement of the timing belt is recommended at every 100,000 miles (160,000 km).
Failure to replace the timing belt may result in serious damage to the engine.

Valve Clearance Adjustment

Incorrect valve clearance will result in increased engine noise and reduced engine output.
Retorque the camshaft bearing cap bolts before checking and adjusting the valve clearance.
Check and adjust the valve clearance if noise occurs.

Tire Rotation

Rotate tires every 7,500 miles (12,000 km).

Front Wheel Bearings Lubricant Replacement

Clean and repack the front wheel bearings at 30,000 miles (48,000 km) intervals.
Refer to FRONT DRIVING AXLE (SEC. 4C).

Radiator Core and Air Conditioning Condenser Cleaning

Clean the front of the radiator core and air conditioning condenser, at 60,000 miles (96,000 km) intervals.

Fluid Level Check

A fluid loss in any system (except windshield washer) may indicate a problem. Repair the system at once.

Engine oil level

Check level and add if necessary. The best time to check the engine oil level is when the oil is warm. After stopping the engine with the vehicle on a level surface, wait a few minutes for the oil to drain back to the oil pan. Pull out the oil level indicator (dipstick). Wipe it clean and push the oil level indicator back down all the way. Pull out the oil level indicator, keeping the tip down, and look at the oil level on it.

Add oil, if needed, to keep the oil level above the “ADD” mark and between the “ADD” and “FULL” marks in the operating range area. Avoid overfilling the engine since this may cause engine damage. Push the oil level indicator back down all the way after taking the reading.
If you check the oil level when the oil is cold, do not run the engine first. The cold oil will not drain back to the pan fast enough to give a true oil level.

Engine coolant level and condition

Check engine coolant level in the coolant reservoir and add engine coolant if necessary. Inspect the engine coolant and replace it if dirty or rusty.

Windshield washer fluid level

Check washer fluid level in the reservoir and add if necessary.

Power steering system reservoir level

Check and keep at the proper level.

Brake master cylinder reservoir level

Check fluid. Keep fluid at proper level. A low fluid level can indicate worn disc brake pads which may need to be serviced.

Hydraulic clutch system

Check fluid level in the reservoir. Add fluid as required.

Downloaded from www.Manualslib.com manuals search engine

Battery fluid level

Check fluid level in the battery.

Fluid Leak Check

Check for fuel, water, oil or other fluid leaks by looking at the surface beneath the vehicle after it has been parked for a while. Water dripping from the air conditioning system after use is normal. If you notice gasoline fumes or fluid at any time, locate the source and correct it at once.

Engine Oil and Oil Filter Replacement

Always use API SE, SF, SG, SH or ILSAC GF–1 quality oils of the proper viscosity.

When choosing an oil, consider the range of temperatures the car will be operated in before the next oil change. Then, select the recommended oil viscosity from the chart.

Always change the oil and the oil filter as soon as possible after driving in a dust storm.

Engine Cooling System Inspection

Inspect the coolant/anti–freeze. If the coolant is dirty or rusty, drain, flush and refill with new coolant. Keep coolant at the proper mixture for proper freeze protection, corrosion inhibitor level and best engine operating temperature. Inspect hoses and replace if cracked, swollen or deteriorated. Tighten the hose clamps if equipped with screw–type clamps. Clean outside of radiator and air conditioning condenser. Wash filler cap and neck. To help ensure proper operation, a pressure test of both the cooling system and the cap is also recommended.

Exhaust System Inspection

Visually inspect the exhaust pipes, muffler, heat shields and hangers for cracks, deterioration, or damage.

Be alert to any changes in the sound of the exhaust system or any smell of fumes. These are signs the system may be leaking or overheating. Repair the system at once, if these conditions exist. (See also “Engine Exhaust Gas Safety” and “Three Way Catalytic Converter” in the Owner’s manual.)

Fuel Cap, Fuel Lines, and Fuel Tank Inspection

Inspect the fuel tank, the fuel cap and the fuel lines every 60,000 miles (96,000 km) for damage which could cause leakage.

Inspect the fuel cap and the gasket for correct sealing and physical damage. Replace any damaged parts.

Drive Belt Inspection

Check the serpentine belt driving for cracks, fraying, wear, and correct tension every 30,000 miles (48,000 km). Replace as necessary.

Wheel Alignment, Balance and Tires Operation

Uneven or abnormal tire wear, or a pull right or left on a straight and level road may show the need for a wheel alignment. A vibration of the steering wheel or seat at normal highway speeds means a wheel balancing is needed. Check tire pressure when the tires are “cold” (include the spare).

Maintain pressure as shown in the tire placard, which is located on the driver’s door lock pillar.

Steering System Operation

Be alert for any changes in steering action. An inspection or service is needed when the steering wheel is harder to turn or has too much free play, or if there are unusual sounds when turning or parking.

Brake Systems Operation

Watch for the “BRAKE” light coming on. Other signs of possible brake trouble are such things as repeated pulling to one side when braking, unusual sounds when braking or between brake applications, or increased brake pedal travel. If you note one of these conditions, repair the system at once.

For convenience, the following should be done when wheels are removed for rotation: Inspect lines and hoses for proper hookup, bindings, leaks, crack, chafing etc. Inspect disc brake pads for wear and rotors for surface condition.

Inspect other brake parts, including parking brake drums, linings etc., at the same time. Check parking brake adjustment.

Inspect the brakes more often if habit or conditions result in frequent braking.

Parking Brake and Transmission Park Mechanism Operation

Park on a fairly steep hill and hold the vehicle with the parking brake only. This checks holding ability. On automatic transmission vehicles, shifting from “P” position to the other positions cannot be made unless the brake pedal is depressed when the key switch is in the “ON” position or the engine is running.

WARNING: BEFORE CHECKING THE STARTER SAFETY SWITCH OPERATION BELOW, BE SURE TO HAVE ENOUGH ROOM AROUND THE VEHICLE. THEN FIRMLY APPLY BOTH THE PARKING BRAKE AND THE REGULAR BRAKE. DO NOT USE THE ACCELERATOR PEDAL. IF THE ENGINE STARTS, BE READY TO TURN OFF THE KEY PROMPTLY. TAKE THESE PRECAUTIONS BECAUSE THE VEHICLE COULD MOVE WITHOUT WARNING AND POSSIBLY CAUSE PERSONAL INJURY OR PROPERTY DAMAGE.

Starter Safety Switch Operation (Automatic Transmission)

Check by trying to start the engine in each gear while setting the parking brake and the foot brake. The starter should crank only in “P” (Park) or “N” (Neutral).

Starter Safety Switch Operation (Manual Transmission)

To check, place the shift lever in “Neutral”, push the clutch pedal halfway and try to start. The starter should not

Downloaded from www.Manualslib.com manuals search engine

crank. The starter should crank only when the clutch pedal is fully depressed.

Accelerator Linkage Lubrication

Lubricate the accelerator pedal fulcrum pin with chassis grease.

Steering and Suspension Inspection

Inspect the front and rear suspension and steering system for damaged, loose or missing parts or signs of wear. Inspect power steering lines and hoses for proper hookup, binding, leaks, cracks, chafing, etc.

Body and Chassis Lubrication

Lubricate the key lock cylinders, the hood latch, the hood and door hinges, the door check link, the parking cable guides, the underbody contact points, and the linkage.

Propeller Shaft Inspection and Lubrication

Except TOD model : yoke and universal joints with grease containing MOS2 (disulfide molybdenum type grease) at the interval shown in the Maintenance Schedule.
All models : check for play in normal direction of rotation of sliding yoke and universal joints. Also check the propeller shaft flange–to–pinion bolts for proper torque to 63 N•m (46 lb ft) for front and rear propeller shaft.

Auto Cruise Control Inspection

Check to see if the clearance between cruise link and accelerator link is normal. Also check that the connected properly.

Clutch Lines and Hoses Inspection

Check lines and hoses for proper attachment, binding, leaks, cracks, chafing, deterioration, etc. Any questionable parts should be replaced or repaired at once. When abrasion or wear is evident on lines or hoses, the cause must be corrected.

Clutch Control Lubrication

Lubricate the clutch pedal bushing, the clevis pin, and pedal spring every 15,000 miles (24,000 km) or 6 months. If a squeaking noise arises from around the bushing or the clevis pin at the clutch pedal arm when the clutch pedal is depressed, lubricate them.

Clutch Pedal Free Play Inspection

Note the clutch pedal free play. It should be 5 – 15 mm (0.2 – 0.6 in). Adjust clutch control when there is little or no free play.

Accelerator Linkage Inspection

Inspect for interference, binding, and damaged or missing parts. Check accelerator pedal for smooth operation and even pedal effort. Replace parts as needed.

Downloaded from www.Manualslib.com manuals search engine

Recommended Fluids and Lubricants

USAGE	FLUID/LUBRICANT
Engine	API SE, SF, SG, SH or ILSAC GF-1 Engine oil (See oil chart on the following page for proper viscosity)
Engine coolant	Mixture of water and good quality ethylene glycol base type antifreeze.
Brake system	DOT-3 hydraulic brake fluid.
Power steering system	DEXRON® -III Automatic transmission fluid.
Automatic transmission	DEXRON® -III Automatic transmission fluid.
Manual transmission	Engine oil (See oil chart on following page for proper viscosity)
Rear axle and front axle	GL-5 gear lubricant (Standard differential) GL-5 Limited slip differential gear lubricant together with limited slip differential lubricant additive (Part No. 8-01052-358-0) or equivalent (If equipped with optional limited slip diferential) (See oil chart in this section for proper viscosity)
Clutch system a. Pivot points b. Clutch fork joint c. Master cylinder	 Engine oil Chassis grease DOT-3 hydraulic brake fluid
Hood latch assembly a. Pivots and spring anchor b. Release pawl	 Engine oil Chassis grease
Hood and door hinges	Engine oil
Chassis lubrication	Chassis grease
Parking brake cables	Chassis grease
Front wheel bearings	Wheel bearing grease
Shift on the fly system	GL-5 gear lubricant
Transfer Case (Except TOD and 2WD model)	SAE40 (Areas where ambient temperatures of 32˚C (90˚F) and higher are regularly encountered.) SAE5W–30SF (Other areas)
TOD system	DEXRON® -III Automatic transmission fluid.
Extension assembly	DEXRON® -III Automatic transmission fluid.
Propeller shafts (Except TOD model) Sliding yoke and Univeral joint	Grease containing MoS_2 or multipurpose type grease NLGI No.2
Body door hinge pins and linkage, fuel door hinge, rear compartment lid hinges	Engine oil
Windshield washer solvent	Washer fluid
Key lock cylinder	Synthetic light weight engine oil (SAE 5W-30)
Accelerator linkage	Chassis grease

Downloaded from www.Manualslib.com manuals search engine

Lubricant Viscosity Chart

Lubricants should be carefully selected according to the lubrication chart. It is also important to select viscosity of lubricants according to the ambient temperature by referring to the following table.

Oil Viscosity Chart for Gasoline Engine

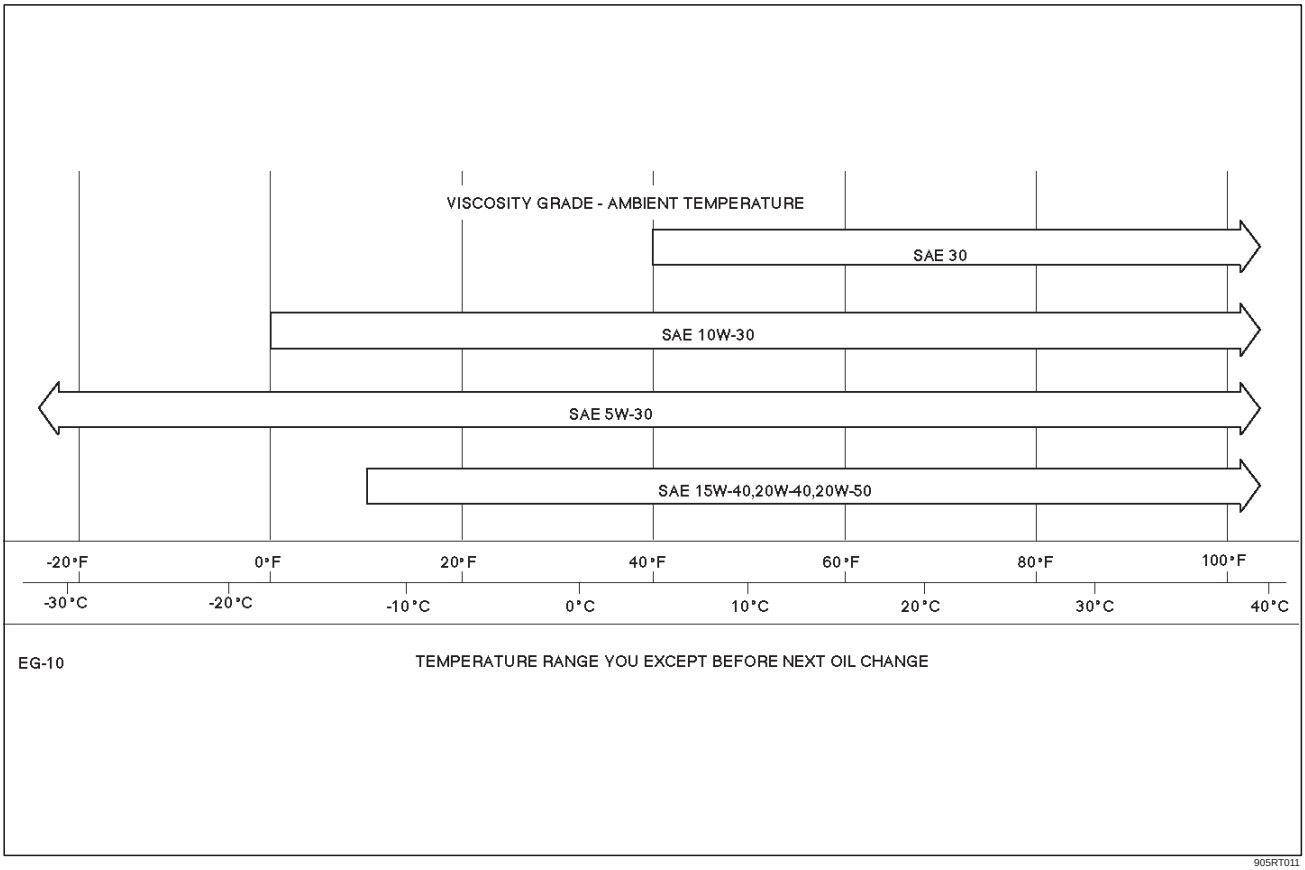

905RT011

Downloaded from www.Manualslib.com manuals search engine

Oil Viscosity Chart for Manual Transmission and Transfer Case

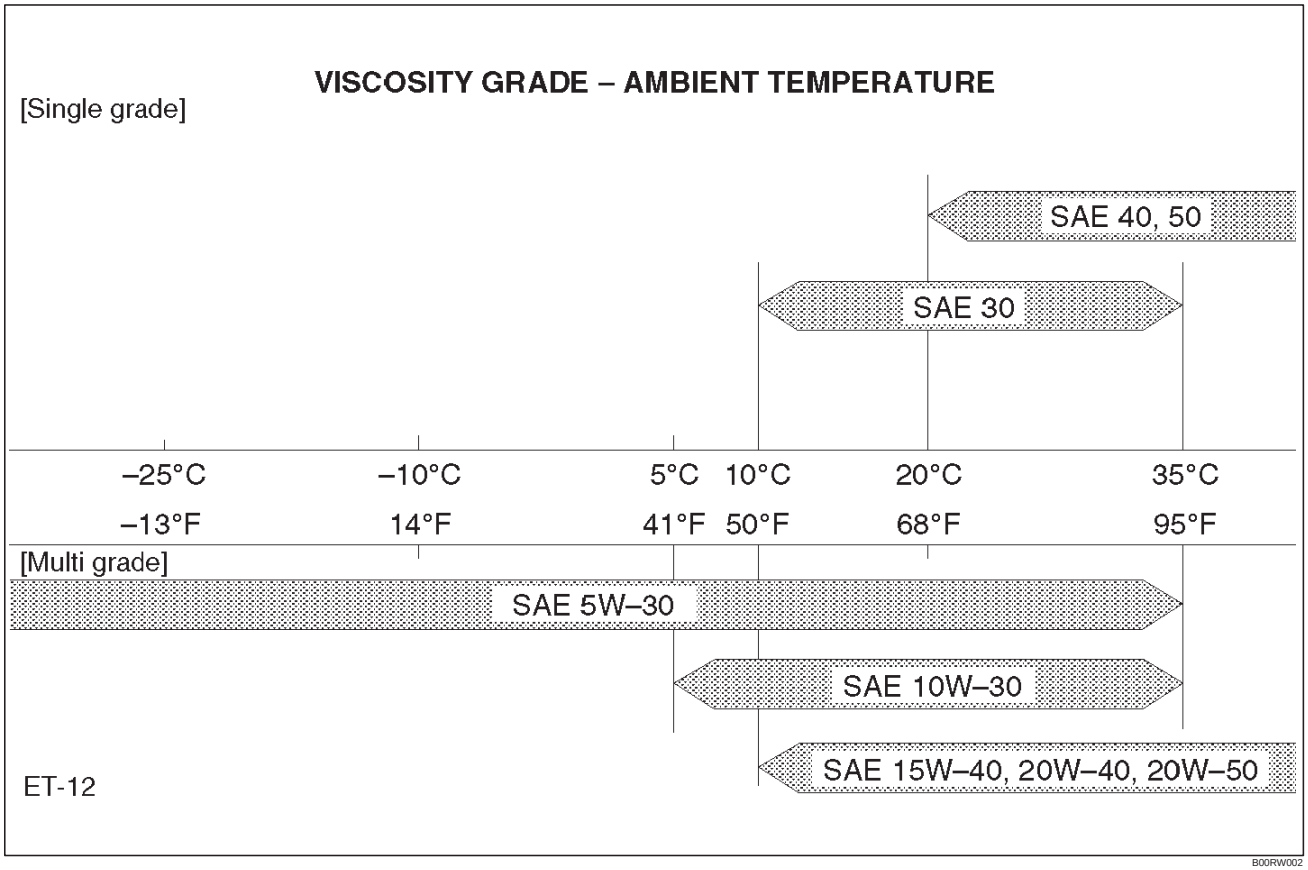

B00RW002

Oil Viscosity Chart for Front Axle

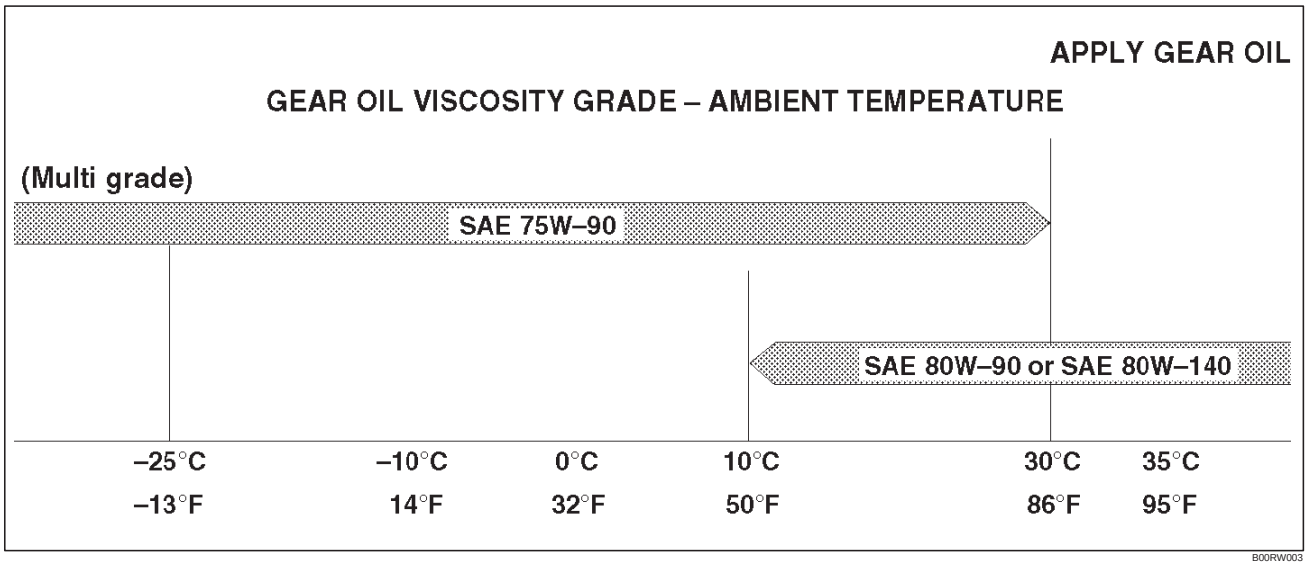

B00RW003

Downloaded from www.Manualslib.com manuals search engine

Oil Viscosty Chart for Rear Axle

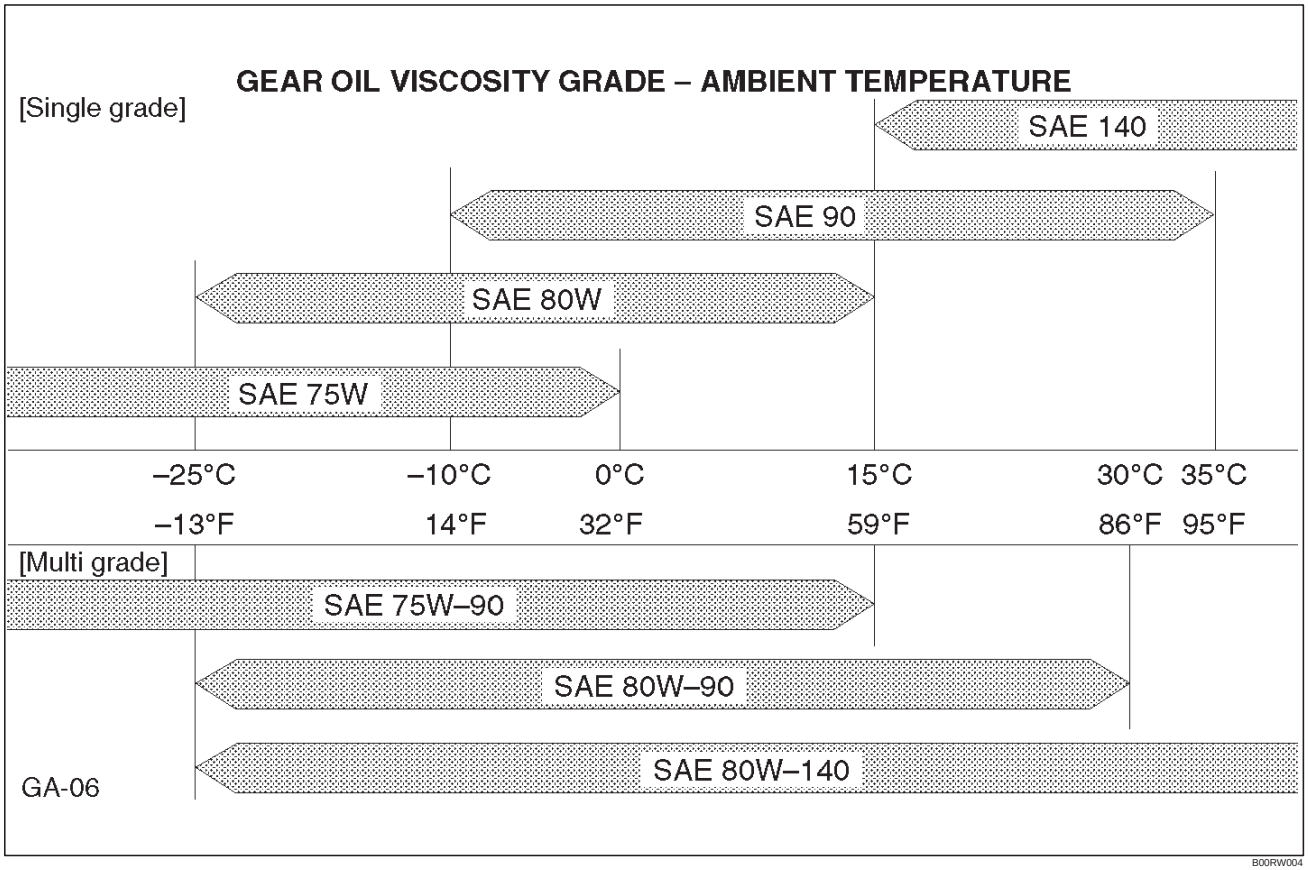

B00RW004

Recommended Liquid Gasket

Type	Brand Name	Manufacturer	Remarks
RTV* Silicon Base	Three Bond 1207B Three Bond 1207C Three Bond 1215 Three Bond 1280 Three Bond 1281	Three Bond Three Bond Three Bond Three Bond Three Bond	For Engine Repairs For Axle Case Repairs. T/M Repairs. T/M
Water Base	Three Bond 1141E	Three Bond	For Engine Repairs
Solvent	Three Bond 1104 Belco Bond 4 Belco Bond 401 Belco Bond 402	Three Bond Isuzu Isuzu Isuzu	For Engine Repairs
Anaerobic	LOCTITE 515 LOCTITE 518 LOCTITE 17430	Loctite Loctite Loctite	All

* RTV: Room Temperature Vulcanizer

NOTE:

1. It is very important that the liquid gaskets listed above or their exact equivalent be used on the vehicle.
2. Be careful to use the specified amount of liquid gasket.
   Follow the manufacturer's instructions at all times.
3. Be absolutely sure to remove all lubricants and moisture from the connecting surfaces before applying the liquid gasket.
   The connecting surfaces must be perfectly dry.
4. Do not apply LOCTITE 17430, LOCTITE 515 and LOCTITE 518 between two metal surfaces having a clearance of greater than 0.25 mm (0.01 in). Poor adhesion will result.

Downloaded from www.Manualslib.com manuals search engine

Recommended Thread Locking Agents

LOCTITE Type	LOCTITE Color
LOCTITE 242	Blue
LOCTITE 262	Red
LOCTITE 271	Red

Application Steps

1. Completely remove all lubricant and moisture from the bolts and the female-threaded surfaces of the parts to be joined.
   The surfaces must be perfectly dry.
2. Apply LOCTITE to the bolts.

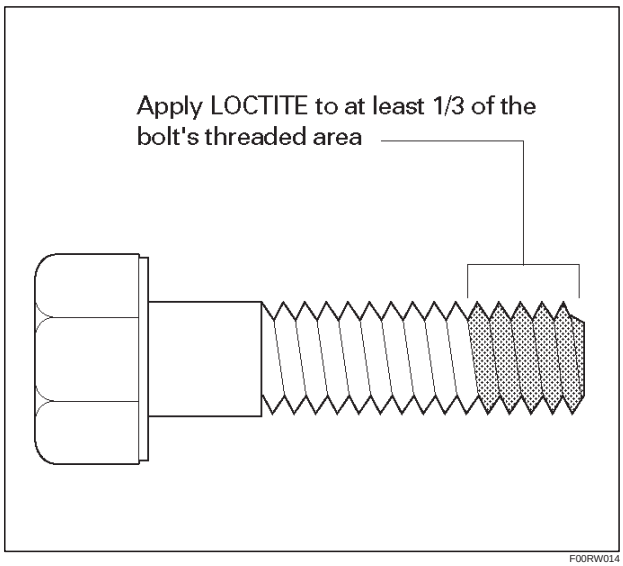

3. Tighten the bolts to the specified torque.
   After tightening, be sure to keep the bolts free from vibration and torque for at least an hour until LOCTITE hardens.

NOTE: When the application procedures are specified in this manual, follow them.

Downloaded from www.Manualslib.com manuals search engine

Maintenance Service Data

Service Data and Specifications

ENGINE	Valve clearance (cold)	Intake 0.28±0.05 mm (0.011 in) Exhaust 0.3±0.05 mm (0.015 in)
	Spark plug type	K16PR-P11/PK16PR11/RC10PYP4
	Spark plug gap	1.05 mm (0.04 in)
CLUTCH	Clutch pedal free play	5-15 mm (0.197-0.591 in)
BRAKE	Brake pedal free play	6-10 mm (0.24-0.39 in)
	Parking brake travel	6-7 notches
WHEEL ALIGNMENT	Toe-in	0±2 mm (0±0.08 in)
	Camber	0˚±30’
	Caster	2˚ 10’±45’
PROPELLER SHAFT	Flange torque	63 N•m (46 lb ft) (Except TOD model) 43 N•m (32 lb ft) (TOD model)
WHEEL AND TIRES	Wheel nut torque	118 N•m (87 lb ft)
	Tire inflation pressure (Front)	210 kPa (30 psi)
	* Tire inflation pressure (Rear)	240 kPa (35 psi)

* Unless otherwise specified on tire information label on the vehicle.

Approximate Capacities

	Items	Metric Measure	U.S. Measure
Fuel tank		85 L	22.5 Gal.
* Crankcase	Oil Change with Filter	4.7 L	5.0 Qt
	Oil Change without Filter	4.0 L	4.3 Qt
Coolant	M/T	8.5 L	9.0 Qt
	A/T	8.8 L	9.3 Qt
Transmission	Manual	2.7 L	2.86 Qt
	Automatic	8.6 L	9.1 Qt
Transfer		1.45 L	1.5 Qt
Transfer with TOD		1.9 L	2.0 Qt
Extention		0.185 L	0.195 Qt
Axle	Rear	3.0 L	3.2 Qt
	Front (4WD vehicle only)	1.4 L	1.5 Qt
Shift on the fly system		0.12 L	0.13 Qt
Power steering		1.0 L	1.1 Qt
Air conditioning (R-134a)		0.6 Kg	1.32 lbs

*Crankcase capacities shown are approximate refill capacities. After refill, recheck oil level.

Downloaded from www.Manualslib.com manuals search engine

TROOPER

HEATING, VENTILATION AND AIR CONDITIONING (HVAC)

HVAC SYSTEMS

CONTENTS

Service Precaution 1A–3
Heating and Ventilation System 1A–3
General Description 1A–3
Wiring Diagram 1A–8
Diagnosis 1A–9
Individual Inspection 1A–12
Heater Unit 1A–14
Heater Unit and Associated Parts 1A–14
Removal 1A–14
Installation 1A–15
Heater Core and / or Mode Door 1A–16
Disassembled View 1A–16
Removal 1A–16
Inspection 1A–17
Installation 1A–17
Heater Mode Control Link Unit 1A–18
Disassembled View 1A–18
Removal 1A–18
Installation 1A–19
Heater Temperature Control Link Unit 1A–19
Disassembled View 1A–19
Removal 1A–19
Installation 1A–19
Blower Assembly 1A–20
Blower Assembly and Associated Parts . . 1A–20
Removal 1A–20
Installation 1A–21
Blower Link Unit and / or Mode door 1A–21
Disassembled View 1A–21
Removal 1A–21
Installation 1A–22
Blower Motor 1A–23
Blower Motor and Associated Parts 1A–23
Removal 1A–23
Installation 1A–23
Rear Heater Duct, Defroster Nozzle and Ventilation Duct 1A–24
Rear Heater Duct, Defroster Nozzle, Ventilation Duct and Associated Parts . . . 1A–24
Removal 1A–24
Installation 1A–25
Center and / or Drive Side Vent 1A–25
Center Vent, Drive Side Vent and Associated Parts 1A–25
Removal 1A–25
Installation 1A–25
Control Lever Assembly and / or Control Cable 1A–26
Control Lever Assembly, Control Cable and Associated Parts 1A–26
Removal 1A–26
Installation 1A–27
Control Panel Illumination Bulb 1A–28
Control Panel Illumination Bulb and Associated Parts 1A–28
Removal 1A–28
Installation 1A–28
Resistor 1A–29
Resistor and Associated Parts 1A–29
Removal 1A–29
Installation 1A–29
Air Conditioning System 1A–30
General Description 1A–30
Diagnosis 1A–39
Individual Inspection 1A–47
General Repair Procedure 1A–48
Compressor Assembly 1A–55
Compressor Assembly and Associated Parts 1A–55
Removal 1A–55
Installation 1A–56
Condenser Assembly 1A–57
Condenser Assembly and Associated Parts 1A–57
Removal 1A–57
Installation 1A–57
Receiver / Drier 1A–58
Receiver / Drier and Associated Parts 1A–58
Removal 1A–58
Installation 1A–58
Pressure Switch 1A–59
Pressure Switch and Associated Parts . . . 1A–59
Removal 1A–59
Installation 1A–59
Evaporator Assembly 1A–60
Evaporator Assembly and Associated Parts 1A–60

Downloaded from www.Manualslib.com manuals search engine

Removal 1A–60
Installation 1A–61
Electronic Thermostat, Evaporator Core and/or Expansion Valve 1A–61
Disassembled View 1A–61
Removal 1A–61
Installation 1A–62
Air Conditioning Switch and Illumination Bulb 1A–63
Air Conditioning Switch, Illumination Bulb and Associated Parts 1A–63
Removal 1A–63
Installation 1A–63
Refrigerant Line 1A–64
Refrigerant Line and Associated Parts 1A–64
Removal 1A–64
Installation 1A–65
Main Data And Specifications 1A–66
Compressor 1A–68
Service Precaution 1A–68
General Description 1A–68
Metric Thread Size Information 1A–70
Compressor Clutch Plate and Hub Assembly 1A–70
Removal 1A–70
Installation 1A–70
Compressor Clutch Rotor and/or Bearing . . . 1A–71
Removal 1A–71
Installation 1A–71
Compressor Clutch Coil 1A–72
Removal 1A–72
Installation 1A–73
Compressor Shaft Seal 1A–74
Service Precaution 1A–74
Seal Leak Detection 1A–74
Removal 1A–74
Cleaning 1A–75
Installation 1A–75
Compressor Pressure Relief Valve 1A–76
Removal 1A–76
Installation 1A–76
Compressor Oil 1A–76
Compressor Oil Check 1A–76
Checking and Adjusting Oil Quantity for Used Compressor 1A–76
Checking and Adjusting for Compressor Replacement 1A–76
Contamination of Compressor Oil 1A–77
Oil Return Operation 1A–77
Replacement of Component Parts 1A–77
Compressor Leak Testing (External and Internal) 1A–77
Special Tools 1A–79
Automatic Air Conditioning System 1A–81
General Description 1A–81
Full Automatic Air Conditioner Parts Configuration 1A–81
Refrigerant Line and Associated Parts 1A–82
Circuit Diagram 1A–83
Functions and Features 1A–88
Automatic Air Conditioner Block Diagram . . . 1A–89
Control Panel Layout 1A–90
Air Control Functions 1A–91
Operation and Functions of Control Panel Switches 1A–92
Overview of Construction, Movement and Control of Major Parts of Automatic Air Conditioner System 1A–94
Overview of Automatic Control of Automatic Air Conditioner 1A–98
Troubleshooting 1A–102
Troubleshooting, Its Overview and Procedures 1A–102
Auto Air Conditioner Control Unit Power Supply Diagnosis 1A–103
Performance and Movement checklist for Automatic Air Conditioner Related Parts . 1A–105
Troubleshooting With Self-Diagnosis Function 1A–107
Inspection By Failed Location 1A–111
Inspection of the Sensors 1A–111
Inspection of the Intake Actuator System . 1A–115
Inspection of the Mix Actuator System 1A–118
Inspection of the Mode Actuator System . . 1A–121
Inspection of the Fan Motor System 1A–124
Inspection of the Magnetic Clutch System 1A–129
Individual Inspection 1A–132
On-Vehicle Service 1A–135
Power Transistor 1A–135
Removal 1A–135
Installation 1A–135
Automatic Heater/Air Conditioner Control Unit 1A–135
Removal 1A–135
Installation 1A–135
In Car Sensor 1A–136
Removal 1A–136
Installation 1A–136
Ambient Sensor 1A–136
Removal 1A–136
Installation 1A–136
Sun Sensor 1A–137
Removal 1A–137
Installation 1A–137
Electronic Thermostat 1A–137
Removal 1A–137
Installation 1A–137
Mode Actuator 1A–138
Removal 1A–138

Downloaded from www.Manualslib.com manuals search engine

Installation 1A–138
Mix Actuator 1A–138
Removal 1A–138
Installation 1A–138
Intake Actuator 1A–139
Removal 1A–139
Installation 1A–139

Service Precaution

WARNING: THIS VEHICLE HAS A SUPPLEMENTAL RESTRAINT SYSTEM (SRS). REFER TO THE SRS COMPONENT AND WIRING LOCATION VIEW IN ORDER TO DETERMINE WHETHER YOU ARE PERFORMING SERVICE ON OR NEAR THE SRS COMPONENTS OR THE SRS WIRING. WHEN YOU ARE PERFORMING SERVICE ON OR NEAR THE SRS COMPONENTS OR THE SRS WIRING, REFER TO THE SRS SERVICE INFORMATION. FAILURE TO FOLLOW WARNINGS COULD RESULT IN POSSIBLE AIR BAG DEPLOYMENT, PERSONAL INJURY, OR OTHERWISE UNNEEDED SRS SYSTEM REPAIRS.

CAUTION: Always use the correct fastener in the proper location. When you replace a fastener, use ONLY the exact part number for that application. ISUZU will call out those fasteners that require a replacement after removal. ISUZU will also call out the fasteners that require thread lockers or thread sealant. UNLESS OTHERWISE SPECIFIED, do not use supplemental coatings (Paints, greases, or other corrosion inhibitors) on threaded fasteners or fastener joint interfaces. Generally, such coatings adversely affect the fastener torque and the joint clamping force, and may damage the fastener. When you install fasteners, use the correct tightening sequence and specifications. Following these instructions can help you avoid damage to parts and systems.

Heating and Ventilation System

General Description

Heater

When the engine is warming up, the warmed engine coolant is sent out into the heater core. The heater system supplies warm air into the passenger compartment to warm it up.

Outside air is circulated through the heater core of the heater unit and then back into the passenger compartment. By controlling the mixture of outside air and heater core air, the most comfortable passenger compartment temperature can be selected and maintained.

The temperature of warm air sent to the passenger compartment is controlled by the temperature control knob. This knob acts to open and close the air mix door, thus controlling the amount of air passed through the heater core.

The air selector knob, with its different modes, also allows you to select and maintain the most comfortable passenger compartment temperature.

The air source select lever is used to select either “FRESH” for the introduction of the outside air, or “RECIRC” for the circulation of the inside air. When the lever is set to “FRESH”, the outside air is always taken into the passenger compartment. When setting the lever to “RECIRC” position, the circulation of air is restricted only to the inside air with no introduction of the outside air and the air in the passenger compartment gets warm quickly. However, the lever is normally set to “FRESH” to prevent the windshield from clouding.

Downloaded from www.Manualslib.com manuals search engine

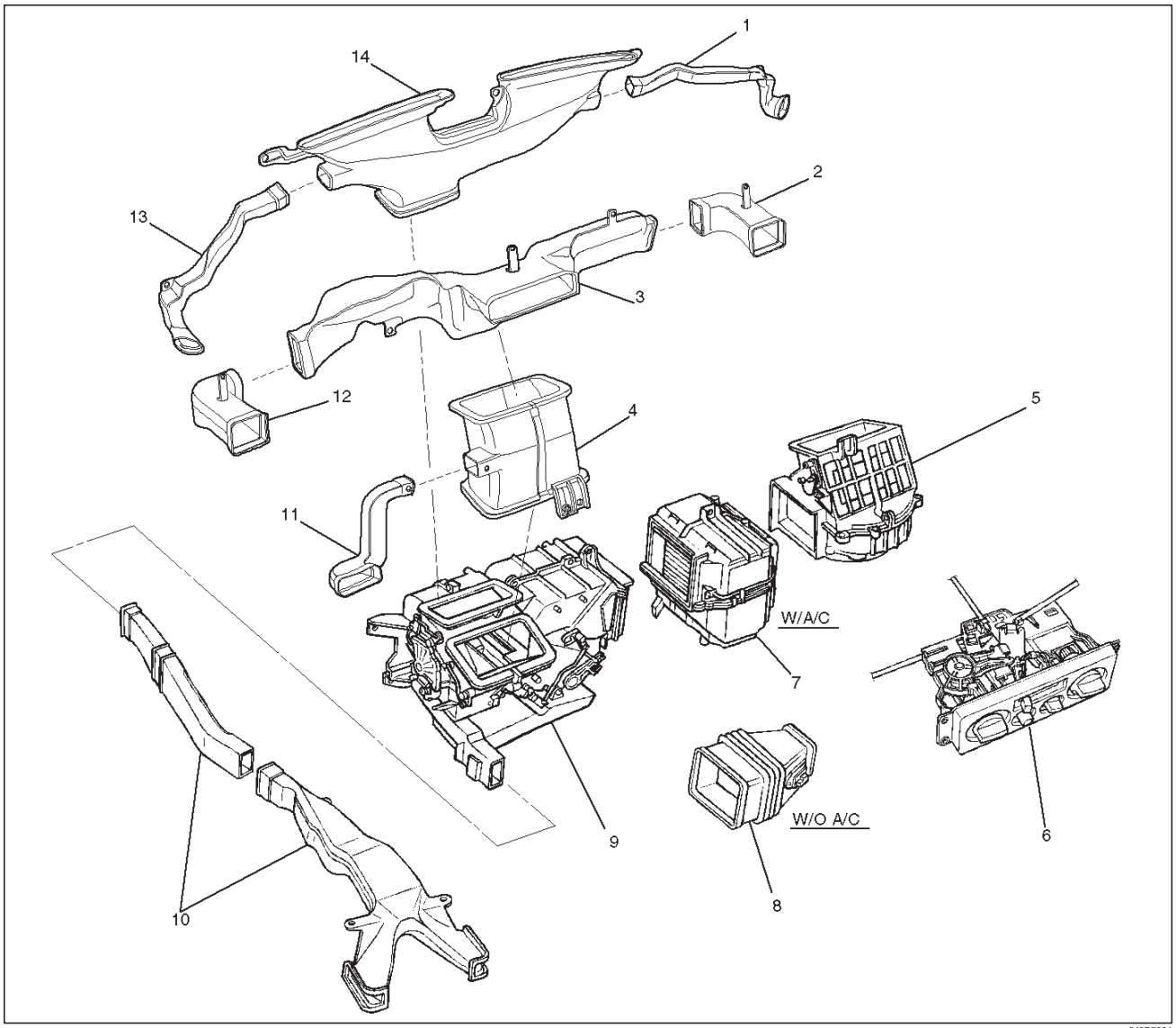

840RS004

Legend

(1) Side Defroster Hose
(2) Vent Box
(3) Upper Center Vent Box
(4) Lower Center Vent Box
(5) Blower Assembly
(6) Control Lever Assembly
(7) Evaporator Assembly
(8) Duct
(9) Heater Unit
(10) Rear Heater Duct
(11) Lap Vent Nozzle
(12) Vent Box
(13) Side Defroster Hose
(14) Defroster Nozzle

Downloaded from www.Manualslib.com manuals search engine

Control Lever Assembly

The vehicle has cable-type-control to control the mode and temperature of the heater unit and the mode door for the air source of the blower assembly.

The fan control is used to control the amount of air sent out by the resistor at four levels from “LOW” to “HIGH”.

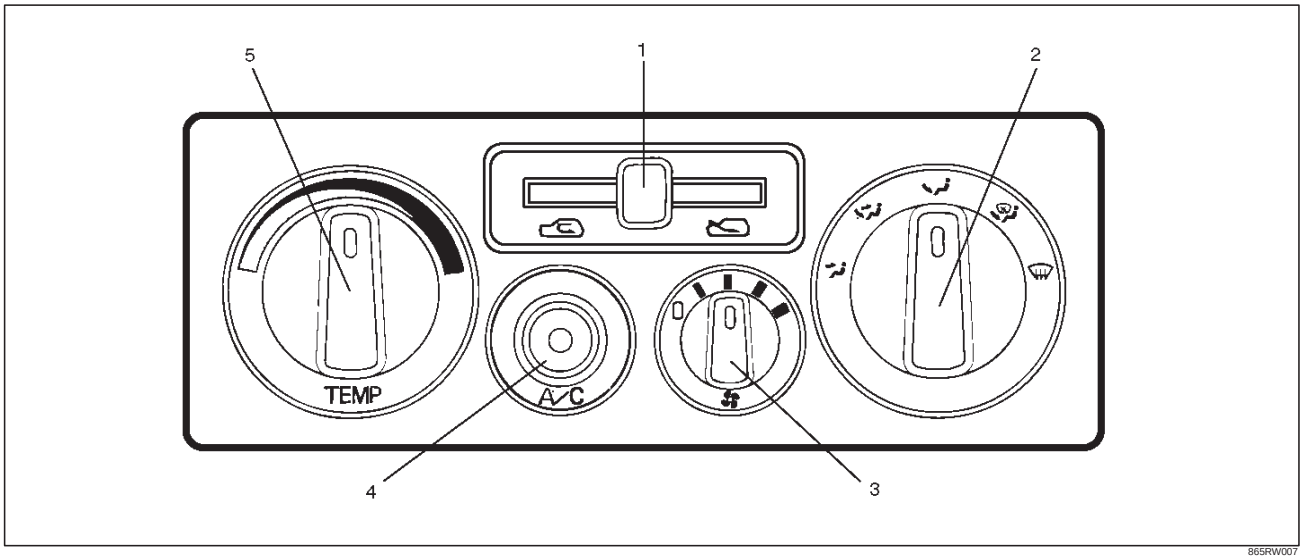

Legend

(1) Air Source Select Lever
(2) Air Select Knob
(3) Fan Control Knob (Fan Switch)
(4) Air Conditioning (A/C) Switch (W/ A/C)
(5) Temperature Control Knob

Downloaded from www.Manualslib.com manuals search engine

Ventilation

Set “AIR SOURCE SELECT LEVER” to “FRESH” position and turn on the blower fan. Heating can be done in this lever position, sending in fresh air from outside.

The blower fan also serves to deliver fresh outside air to the vehicle interior to assure adequate ventilation.

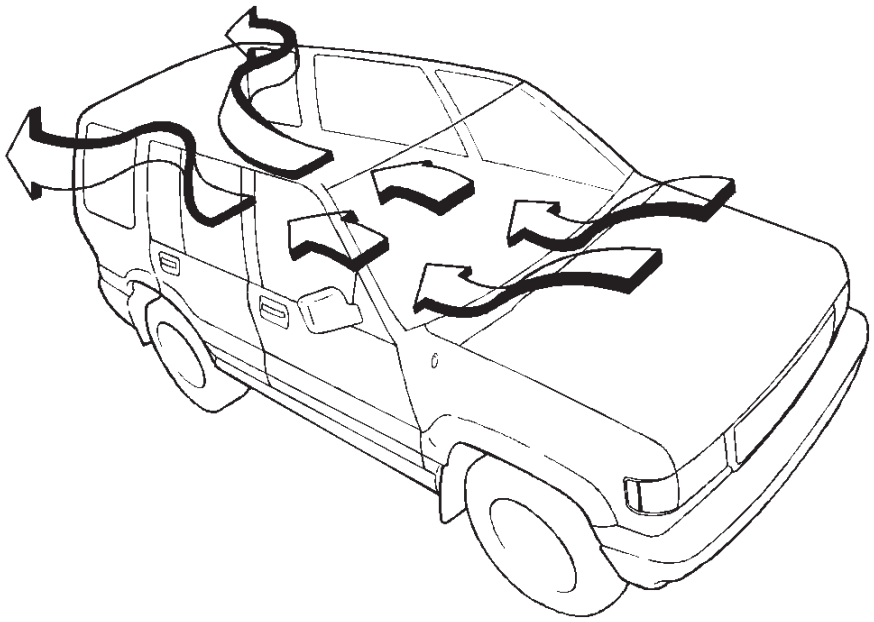

C01RS001

Downloaded from www.Manualslib.com manuals search engine

Air Select Knob

The air select knob allows you to direct heated air into the passenger compartment through different outlets.

1. **Vent** – In this position, air is discharged from the upper air outlet. Air quantity is controlled by the fan control knob.
2. **Bi-Level** – In this position, air flow is divided between the upper air outlets and the floor air outlets, with warmer air delivered to the floor outlets than the air delivered to the upper air outlets.
3. **Foot** – In this position, air flow is delivered to the foot while sending approx 30% op total amount air to the wind shield.
4. **Def/Foot** – In this position, air flow is delivered to the foot, while sending approx. 40% of total amount of air to the windshield.
   Selecting this mode allows air conditioning system to work when the fan switch is turned to on position, even if the A/C switch is off.
5. **Defrost** – In this position, most of the air is delivered to the windshield and a small amount is delivered to the side windows.

Moving the air source select lever to the “CIRC” position provides quickest heat delivery by closing the blower assembly mode door. In this position, outside air is not delivered to the passenger compartment.
Selecting this mode allows air conditioning system to work when the fan switch is turned to on position, even if the A/C switch is off.

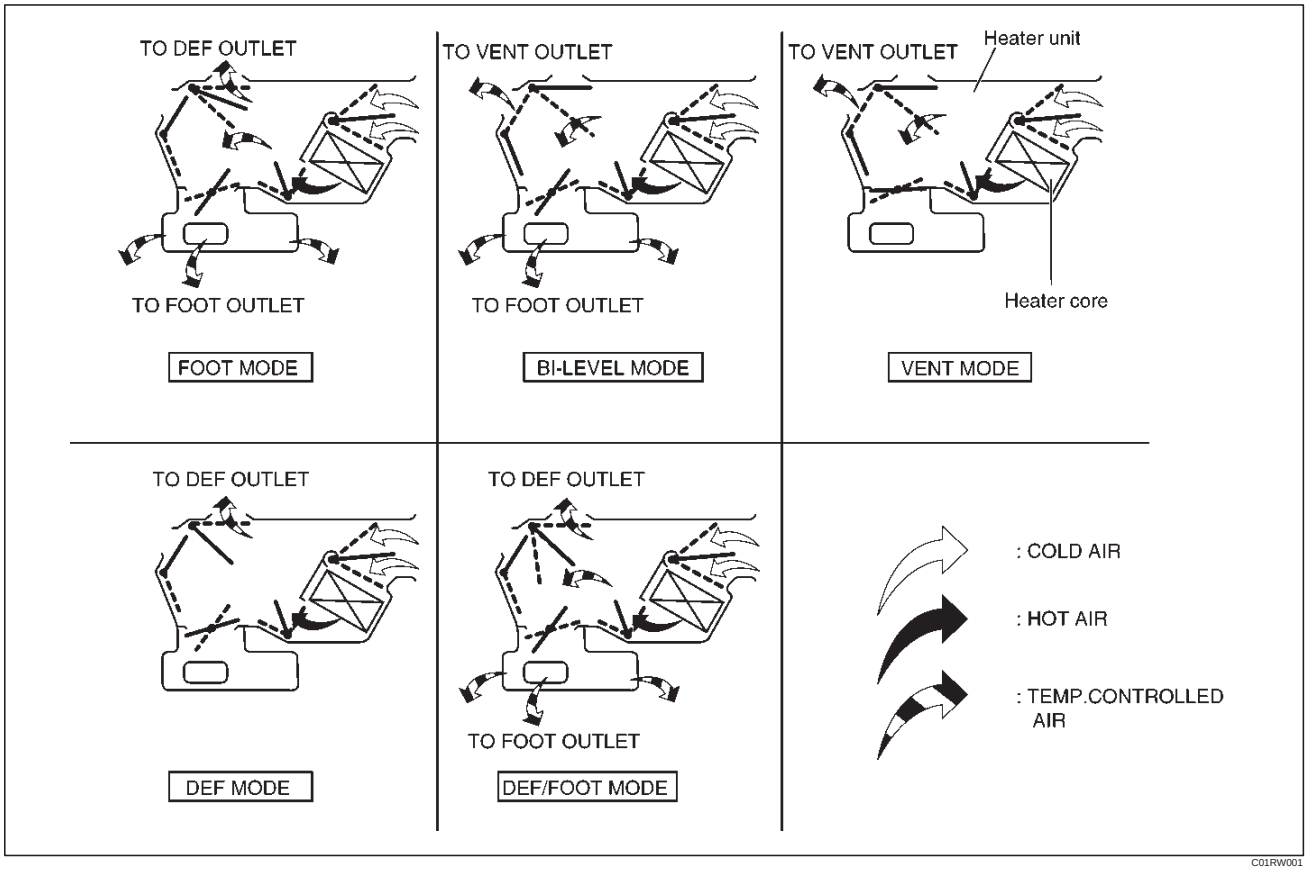

C01RW001

Air Source Select Lever

The intake of outside air and the circulation of inside air are controlled by sliding this lever left or right.

Fan Control Knob

This knob controls the blower motor speed to regulate the amount of air delivered to the defrost, foot, and ventilation ducts:

1. Low
2. Medium Low
3. Medium High
4. High

Temperature Control Knob

When the temperature control knob is in the “COLD” position, the air mix door closes to block the air flow to the heater core.
When the temperature control knob is in the “HOT” position, the air mix door opens to allow air to pass through the heater core and heat the passenger compartment
Placing the knob in a intermediate position will cause a lesser or greater amount air to reach the heater core. In this mode the passenger compartment temperature can be regulated

Downloaded from www.Manualslib.com manuals search engine

Wiring Diagram

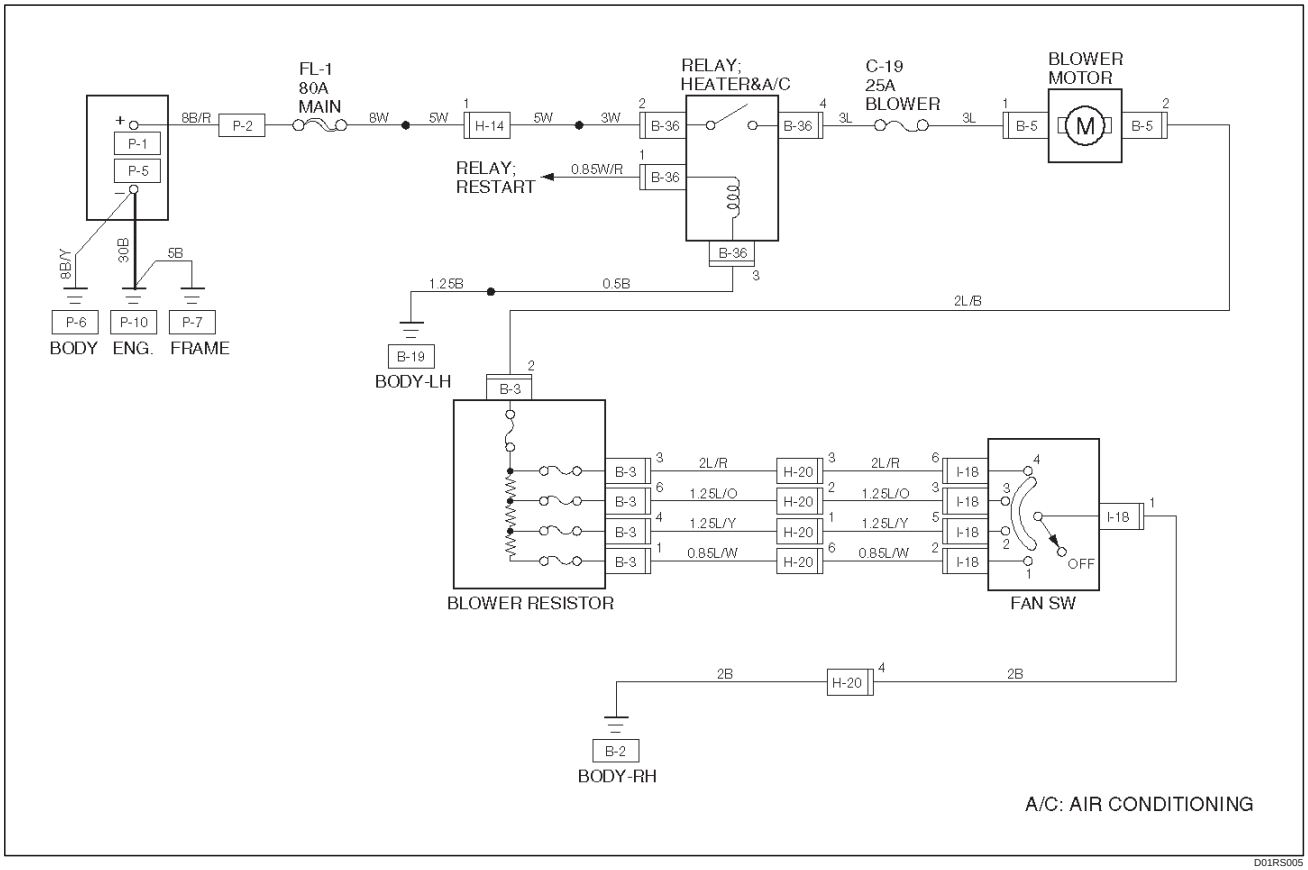

D01RS005

Downloaded from www.Manualslib.com manuals search engine

Diagnosis

Heating Cycle diagnosis

Condition	Possible cause	Correction
No heating or insufficient heating.	Blower motor does not run or runs improperly.	Refer to “FAN CONTROL LEVER (FAN SWITCH) DIAGNOSIS”.
	Engine coolant temperature is low.	Check the engine coolant temperature after warming up the engine and check the thermostat. Replace as necessary.
	Insufficient engine coolant.	Add engine coolant as required.
	Circulation volume of engine coolant is insufficient.	Check if the water hose to the heater core is clogged, collapsed or twisted. Repair or replace as necessary.
	Heater core clogged or collapsed.	Clean or replace as necessary.
	The heater cores is not provided with air sent from the blower motor.	Repair the temperature control link unit or mode doors.
	Duct connections defective or unsealing.	Repair or replace as necessary.
Control lever moves but mode door does not operate.	Cable attaching clip is not correct.	Repair
	Link unit of heater or blower assembly defective.	Repair
The mode door cannot be set to the mode selected.	Link unit of heater unit or blower assembly defective.	Repair.
	Control cable is not adjusted.	Adjust.

Downloaded from www.Manualslib.com manuals search engine

Fan Control Lever (Fan Switch) Diagnosis

Current flows to the blower motor through the heater and the A/C relay (B-36) to activate the rotation of the blower motor by turning “ON” the fan control knob (fan switch). Blower motor speed is controlled in stages by the resistor, by operating the switch from “LOW” to “HIGH”.

For the inspection of the relays, switches and units in each table, refer to “INDIVIDUAL INSPECTION” in this section.

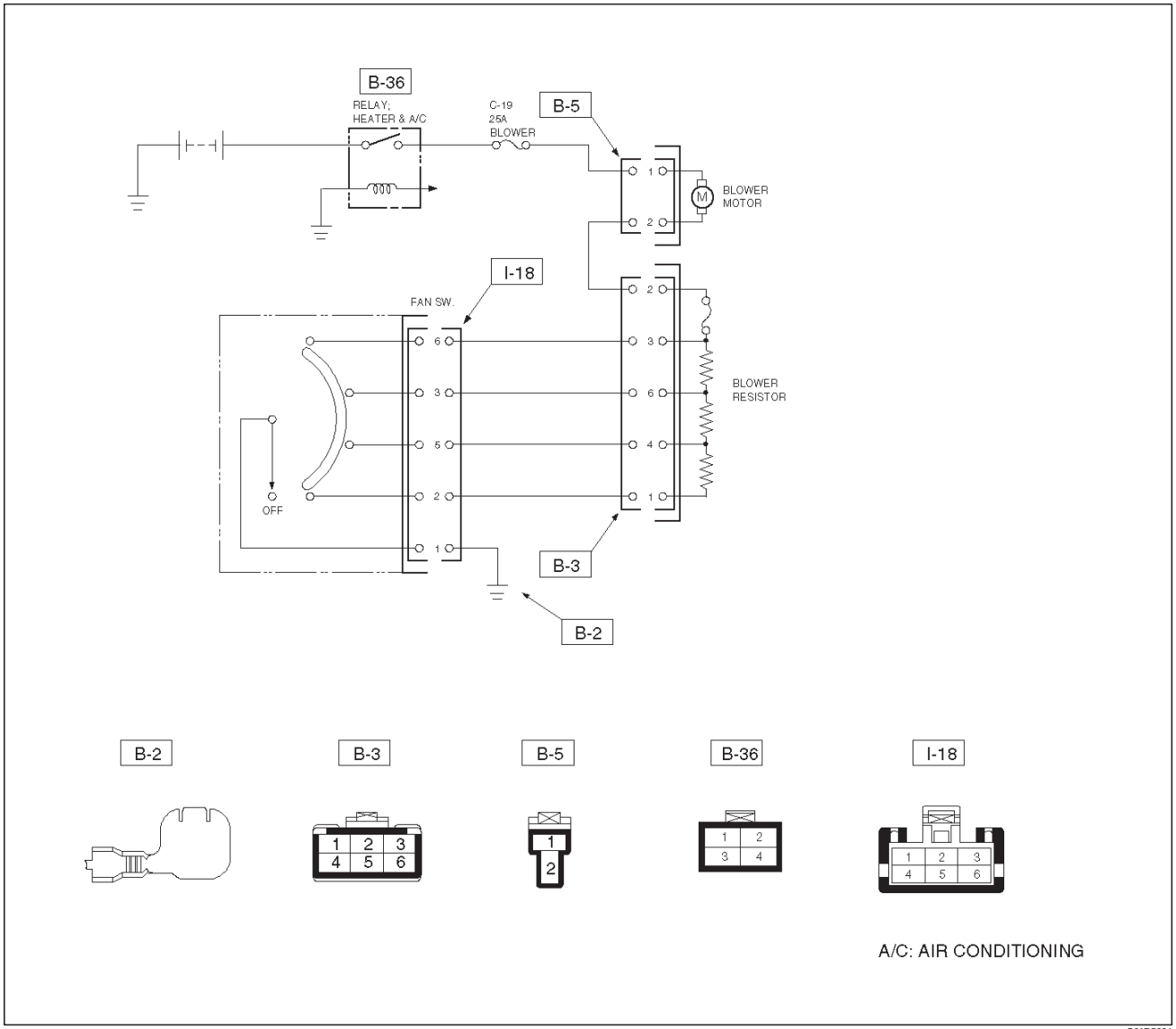

D01RS004

Condition	Possible cause	Correction
Blower motor does not run.	—	Refer to Chart A
Blower motor does not run in certain position (s).	—	Refer to Chart B, C, D and E
Blower motor does not stop at “OFF” position.	—	Refer to Chart F

Downloaded from www.Manualslib.com manuals search engine

Chart “A” Blower Motor Dose Not Run

Step	Action	Yes	No
1	Is relay (B-36) OK?	Go to Step 2	Replace
2	Is fuse C-19 (25A) OK?	Go to Step 3	Replace
3	Is resistor OK?	Go to Step 4	Replace
4	Is fan control knob OK?	Go to Step 5	Replace control lever assembly.
5	Is blower motor OK?	Go to Step 6	Replace
6	1. Turn the ignition switch “ON”. 2. Turn fan control knob “ON”. 3. Check to see if battery voltage is present at chassis side connector terminal No. B5-1 Is there a battery voltage?	Poor ground or open circuit either between chassis side connector terminal No. B5-2 and No. B3-2 or No. I18-1 and body ground (No. B-2).	Open circuit between No. C-19 (25A) fuse and No. B5-1.

Chart “B” Blower Motor Does Not Run At Low Position

Step	Action	Yes	No
1	Is resistor OK?	Go to Step 2	Replace
2	Is fan control knob (Fan Switch) OK?	Open circuit between chassis side connector terminal No. B3-1 and No.I18-2.	Replace control lever assembly.

Chart “C” Blower Motor Dose Not Run At Medium Low Position

Step	Action	Yes	No
1	Is resistor OK?	Go to Step 2	Replace
2	Is fan control knob (Fan Switch) OK?	Open circuit between the chassis side connector terminal No. B3-4 and No. I18-5.	Replace control lever assembly.

Chart “D” Blower Motor Dose Not Run At Medium High Position

Step	Action	Yes	No
1	Is resistor OK?	Go to Step 2	Replace
2	Is fan control knob (Fan Switch) OK?	Open circuit between chassis side connector terminal No. B3-6 and No. I18-3.	Replace control lever assembly.

Downloaded from www.Manualslib.com manuals search engine

Chart “E” Blower Motor Dose Not Run At High Position

Step	Action	Yes	No
1	Is resistor OK?	Go to Step 2	Replace
2	Is fan control knob (Fan Switch) OK?	Open circuit between Chassis side connector terminal No. B3-3 and No. I18-6.	Replace control lever assembly.

Chart “F” Blower Motor Does Not Stop In The “OFF” Position

Step	Action	Yes	No
1	Is the fan control knob (Fan Switch) OK?	Short circuit between chassis side connector terminal No. B5-2 and No. B3-2,No. B3-3 and No. I18-6, No. B3-6 and No. I18-3, No. B3-4 and No. I18-5 or No. B3-1 and No. I18-2	Replace control lever assembly.

Individual Inspection

Blower Motor

1. Disconnect the blower motor (B-5) connector from the blower motor.
2. Connect the battery positive terminal to the No. 1 terminal of the blower motor and the negative to the No. 2.
3. Be sure to check to see if the blower motor operates correctly.

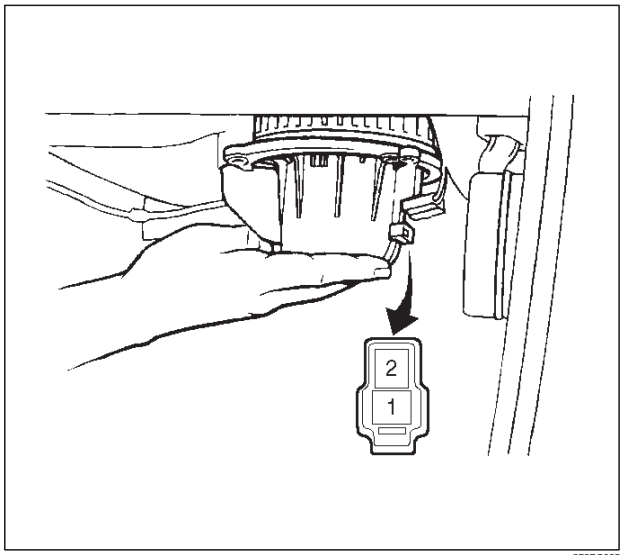

873RS005

Resistor

1. Disconnect the resistor (B-3) connector.
2. Check for continuity and resistance between the terminals of the resistor.

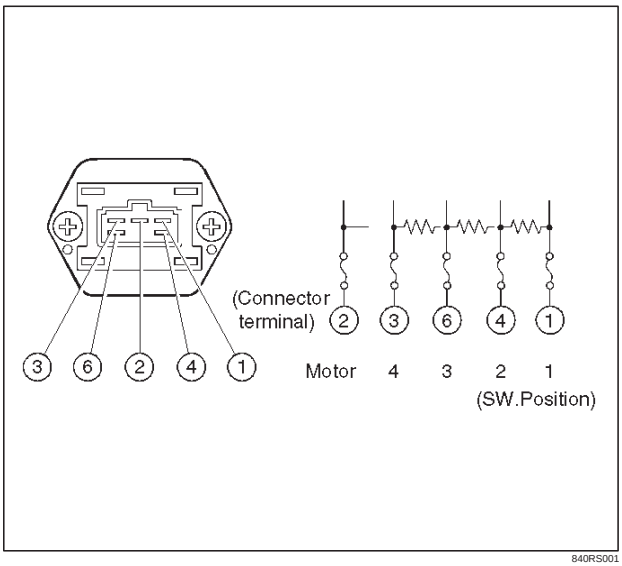

840RS001

Downloaded from www.Manualslib.com manuals search engine

Fan switch position	Resistor terminals with continuity	Resistance
1	1 — 2	2.4 μ
2	2 — 4	0.90 μ
3	2 — 6	0.28 μ
4	2 — 3	—

Fan Control Knob (Fan Switch)

1. Check for continuity between the terminals of the fan switch.

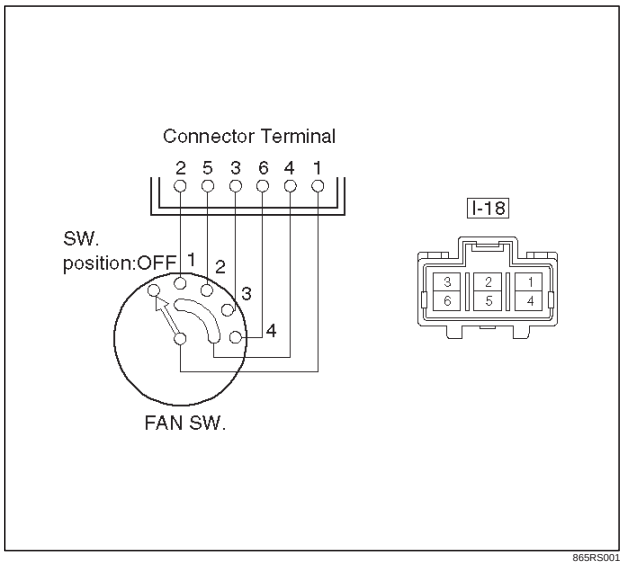

865RS001

Fan switch position	Switch connector terminals with continuity
OFF	No continuity
1	1 – 2 – 4
2	1 – 4 – 5
3	1 – 3 – 4
4	1 – 4 – 6

Heater & A/C Relay

1. Disconnect the heater and the A/C relay (B-36).
   - When removing the connector for relay, unfasten the tang lock of the connector by using a screwdriver, then pull the relay (1) out.

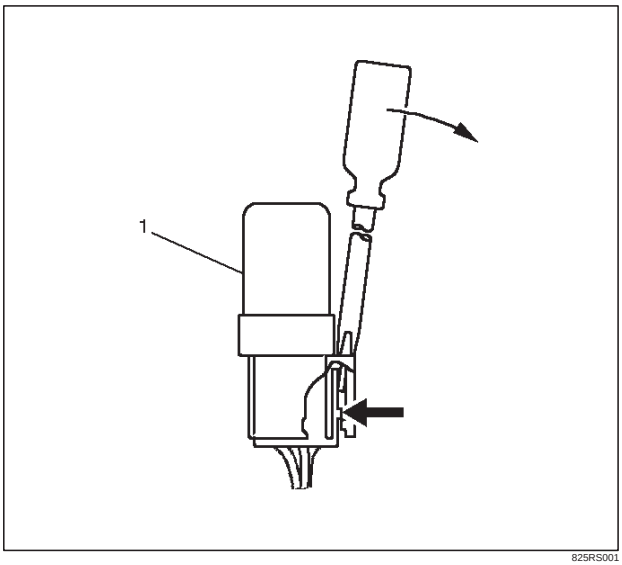

825RS001

2. Check for continuity between the heater and the A/C relay (B-36) terminals.

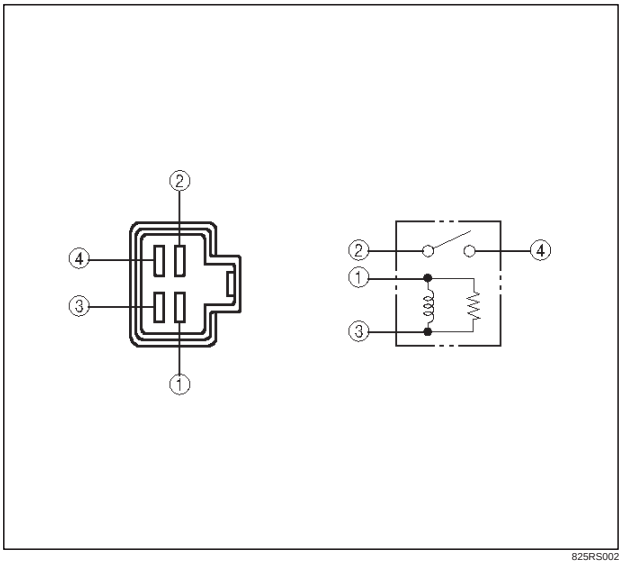

825RS002

Condition	Relay terminals with continuity
Normal	1 – 3 (Approx 85–105μ)
When battery voltage is applied between 1 – 3	2 – 4

Downloaded from www.Manualslib.com manuals search engine

Heater Unit

Heater Unit and Associated Parts

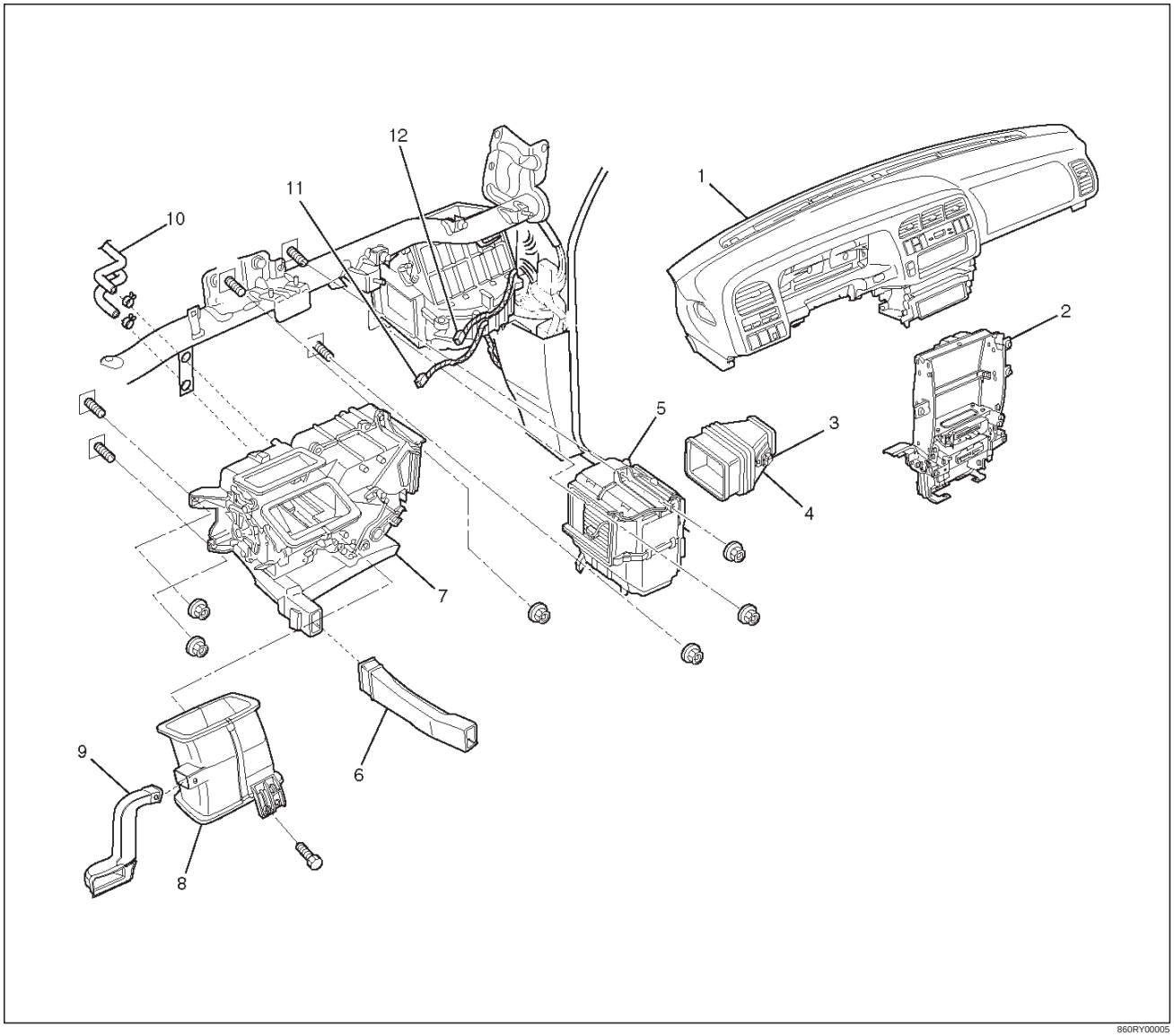

860RY00005

Legend

(1) Instrument Panel Assembly
(2) Instrument Panel Center Bracket
(3) Resistor
(4) Duct
(5) Evaporator Assembly (A/C only)
(6) Rear Heater Duct
(7) Heater Unit Assembly
(8) Center Ventilation Lower Duct
(9) Driver Lap Vent Nozzle
(10) Water Hose
(11) Electro Thermo Connector (With A/C)
(12) Resistor Connector

Removal

1. Disconnect the battery ground cable.
2. Drain the engine coolant.
3. Discharge and recover refrigerant (with air conditioning)
   - Refer to Refrigerant Recovery in this section.
4. Remove the Instrument panel assembly.
   - Refer to Instrument Panel Assembly in Body and Accessories section.
5. Disconnect the water hoses at the heater unit.
6. Disconnect resistor connector.
7. Remove duct.

Downloaded from www.Manualslib.com manuals search engine

8. Remove evaporator assembly (A/C only).
   - Refer to Evaporator Assembly in this section.
9. Remove instrument panel center bracket.
   - Refer to Cross Beam Assembly in Body and Accessories section.
10. Remove rear heater duct.
11. Remove heater unit assembly.
12. Remove driver lap vent nozzle.
13. Remove center ventilation lower duct.

Installation

To install, follow the removal steps in the reverse order, noting the following points:

1. When handling the PCM and the control unit, be careful not to make any improper connection of the connectors.
2. Adjust the control lever assembly cables.
   - Refer to Control Lever Assembly in this section.
3. When installing the heater unit, defroster nozzle and center vent duct, be sure that the proper seal is made, without any gap between them.

Downloaded from www.Manualslib.com manuals search engine

Heater Core and / or Mode Door

Disassembled View

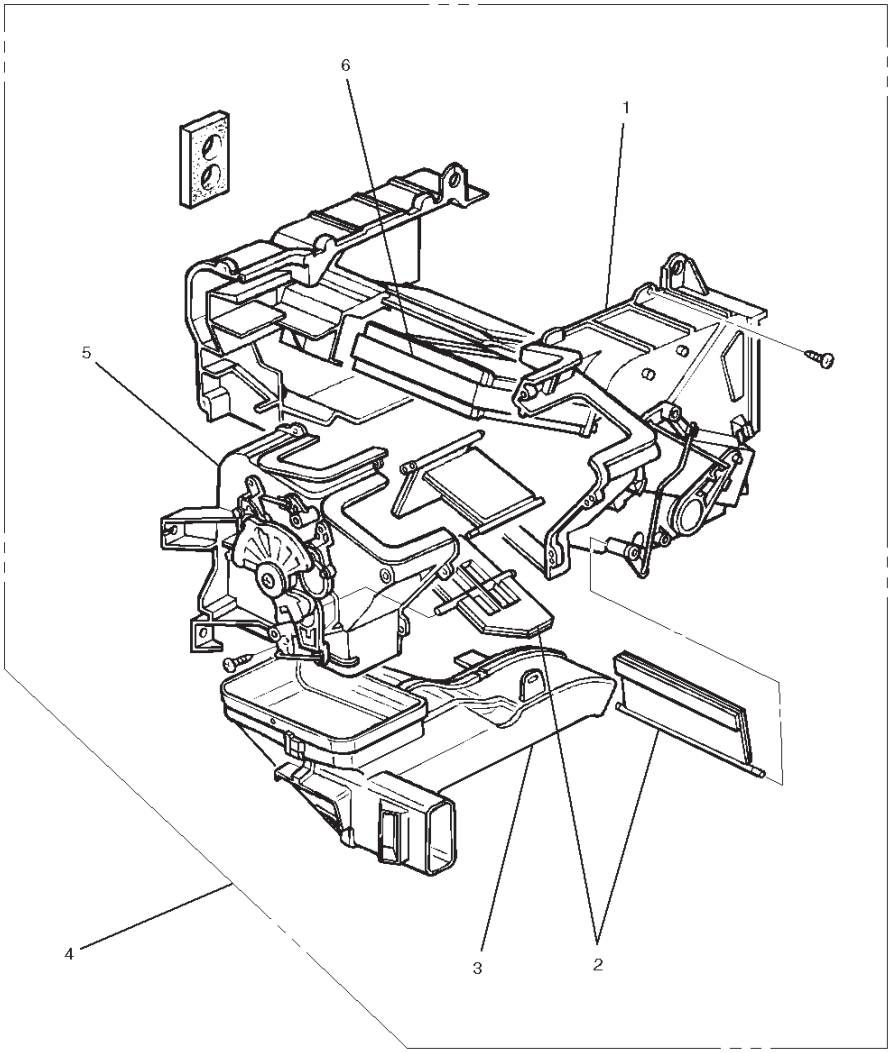

860RS001

Legend

(1) Case (Temperature Control)
(2) Mode Door
(3) Duct
(4) Heater Unit
(5) Case (Mode Control)
(6) Heater Core

Removal

1. Disconnect the battery ground cable.
2. Drain the engine coolant.
3. Discharge and recover refrigerant (with air conditioning).
   - Refer to Refrigerant Recovery in this section.
4. Remove heater unit.
   - Refer to Heater Unit in this section.
5. Remove duct.
6. Remove case (Mode control) and do not remove link unit at this step.

Downloaded from www.Manualslib.com manuals search engine

7. Remove case (Temperature control). Separate two halves of core case.

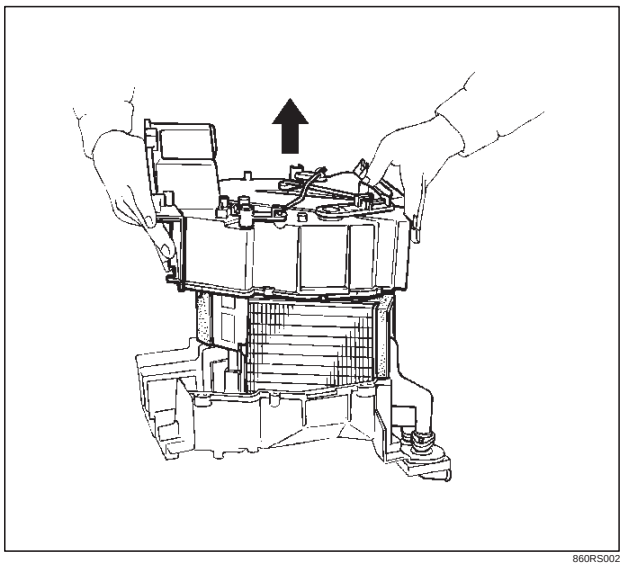

860RS002

8. Remove heater core (1).

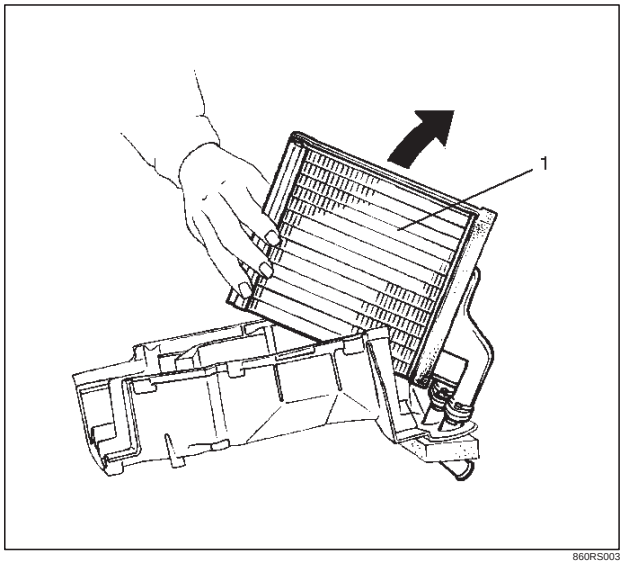

860RS003

9. Pull out the mode door while raising up the catch of the door lever.

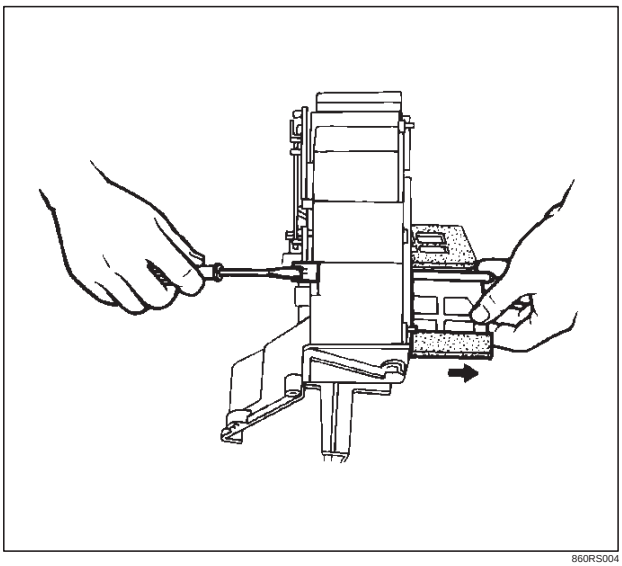

860RS004

Inspection

Check for foreign matter in the heater core, stains or core fin damage.

Installation

To install, follow the removal steps in the reverse order, noting the following point:

1. Check that each mode door operates properly.

Downloaded from www.Manualslib.com manuals search engine

Heater Mode Control Link Unit

Disassembled View

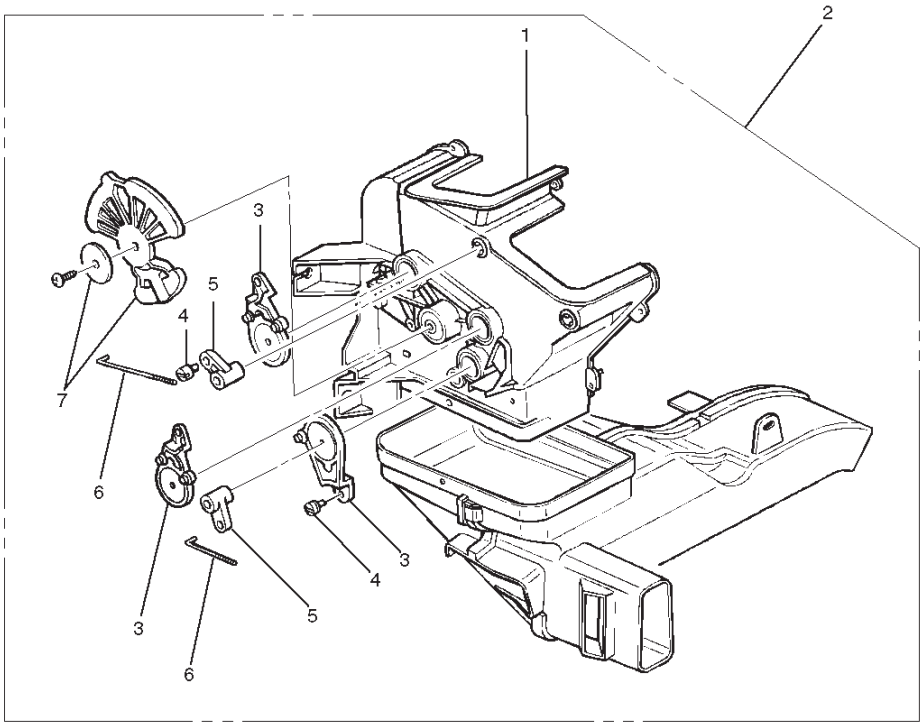

860RS005

Legend

(1) Case (Mode Control)
(2) Heater Unit
(3) Mode Sub-lever
(4) Clip
(5) Door Lever
(6) Rod
(7) Washer and Mode Main Lever

Removal

1. Disconnect the battery ground cable.
2. Drain engine coolant.
3. Discharge and recover refrigerant (with air conditioning).
   - Refer to Refrigerant Recovery in this section.
4. Remove heater unit.
   - Refer to Heater Unit in this section.
5. Remove the case (Mode control) from heater unit.
6. Remove washer and the mode main lever.
7. Remove rod.
8. Press the tab of the sub-lever inward, and take out the sub-lever.
9. Pull out the door lever while raising up the catch of the door lever.

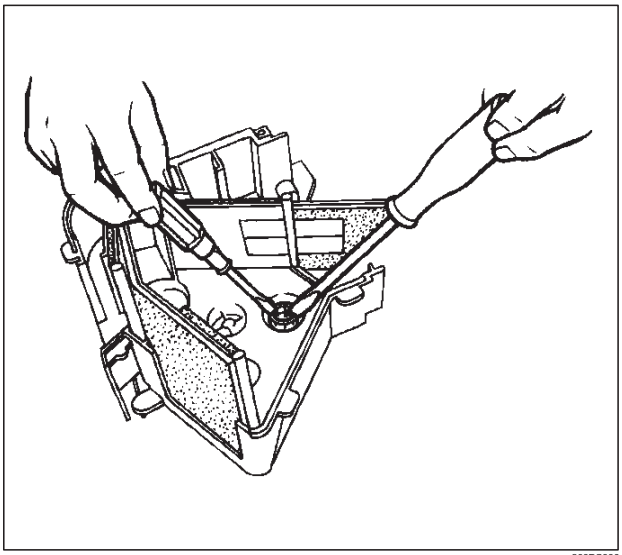

860RS006

10. Remove clip.

Downloaded from www.Manualslib.com manuals search engine

Installation

To install, follow the remove steps in the reverse order, noting the following points:

1. Apply grease to the mode sub-lever and to the abrasive surface of the heater unit.
2. After installing the link unit, check to see if the link unit operates correctly.

Heater Temperature Control Link Unit

Disassembled View

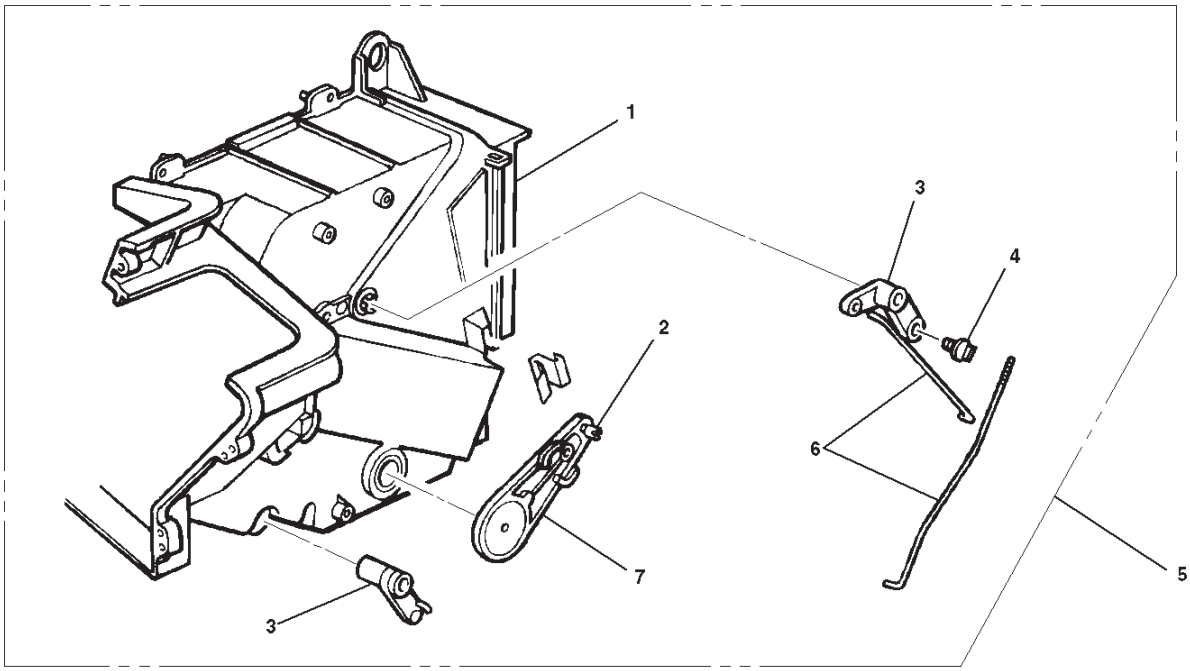

860RS007

Legend

(1) Case (Temperature control)
(2) Clip
(3) Door Lever
(4) Clip
(5) Heater Unit
(6) Rod
(7) Sub-lever

Removal

1. Disconnect the battery ground cable.
2. Drain engine coolant.
3. Discharge and recover refrigerant (with air conditioning).
   - Refer to Refrigerant Recovery in this section.
4. Remove heater unit.
   - Refer to Heater Unit in this section.
5. Remove the case (Temperature control) from the heater unit.
6. Remove rod.
7. Remove sub-lever.
8. Pull out the door lever while raising up the catch of the door lever.
9. Remove clip.

Installation

To install, follow the removal steps in the reverse order, noting the following points:

1. Apply grease to the sub-lever and to the abrasive surface of the heater unit.
2. After installing the link unit, check to see if the link unit operates correctly.

Downloaded from www.Manualslib.com manuals search engine

Blower Assembly

Blower Assembly and Associated Parts

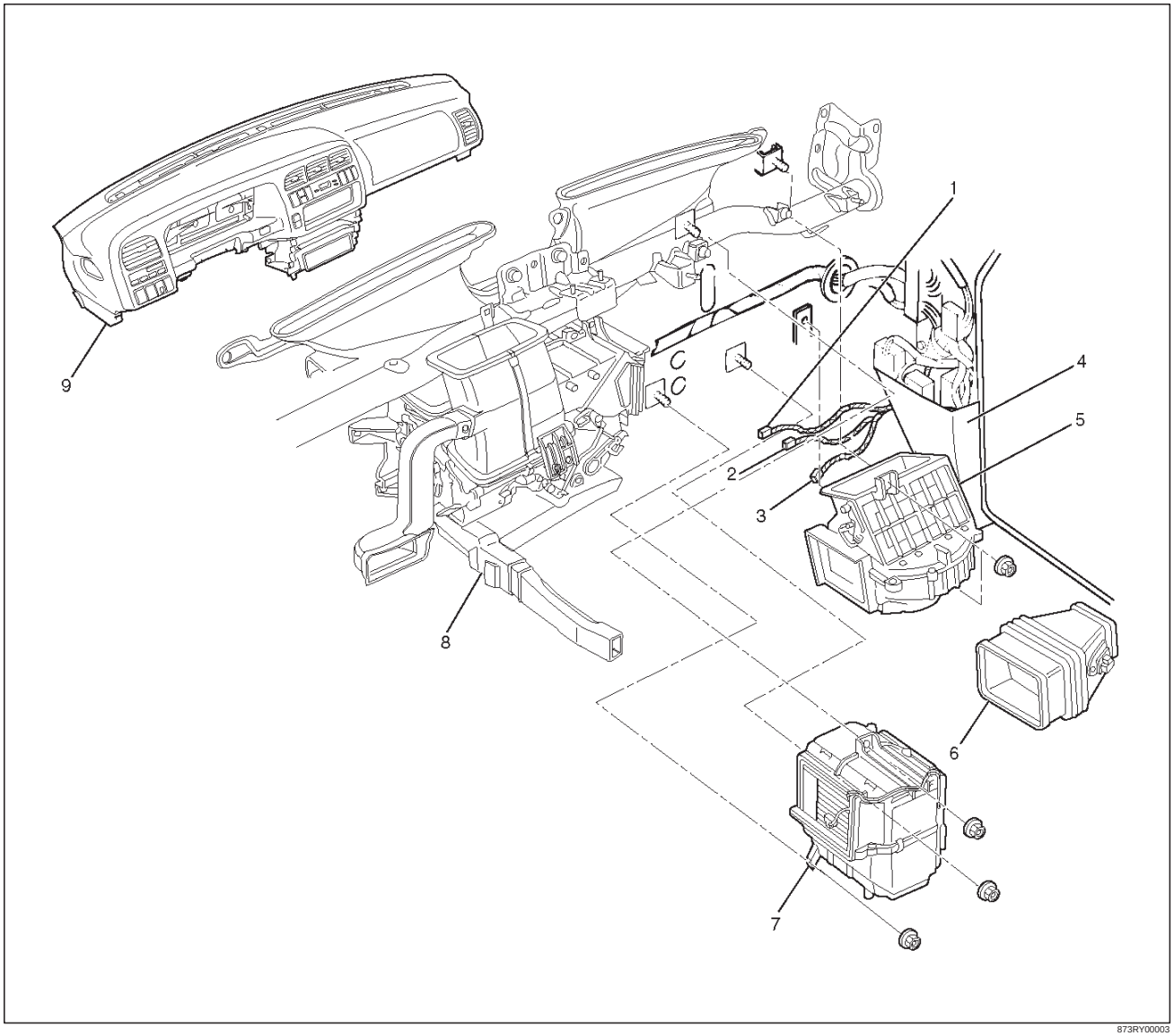

873RY00003

Legend

(1) Electro Thermo Connector
(2) Blower Motor Connector
(3) Resistor Connector
(4) Dash Side Trim Panel (RH)
(5) Blower Assembly
(6) Duct
(7) Evaporator Assembly (A/C only)
(8) Heater Unit
(9) Instrument Panel Assembly

Removal

1. Disconnect the battery ground cable.
2. Discharge and recover refrigerant (with air conditioning).
   - Refer to Refrigerant Recovery in this section.
3. Remove instrument panel assembly.
   - Refer to Instrument Panel Assembly in Body and Accessories section.
4. Disconnect resistor connector.
5. Remove duct.
6. Remove evaporator assembly (A/C only).
   - Refer to Evaporator Assembly in this section.
7. Remove dash side trim panel (RH).
8. Disconnect blower motor connector.
9. Remove blower assembly.

Downloaded from www.Manualslib.com manuals search engine

Installation

To install, follow the removal steps in the reverse order, noting the following point:

1. Adjust the control lever assembly cables.
   - Refer to Control Lever Assembly in this section.

Blower Link Unit and / or Mode door

Disassembled View

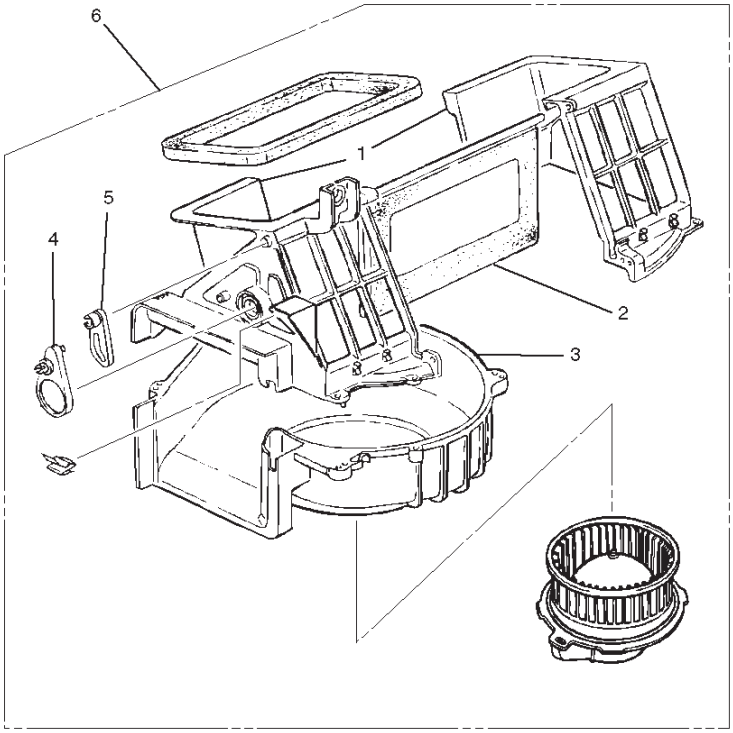

873RS001

Legend

(1) Upper Case
(2) Mode Door
(3) Lower Case
(4) Sub Lever
(5) Door Lever
(6) Blower Assembly

Removal

1. Disconnect the battery ground cable.
2. Discharge and recover refrigerant (with air conditioning).
   - Refer to Refrigerant Recovery in this section.
3. Remove blower assembly.
   - Refer to Blower Assembly in this section.

Downloaded from www.Manualslib.com manuals search engine

4. Remove lower case.
5. Separate the upper case and slit the lining parting face with a knife.

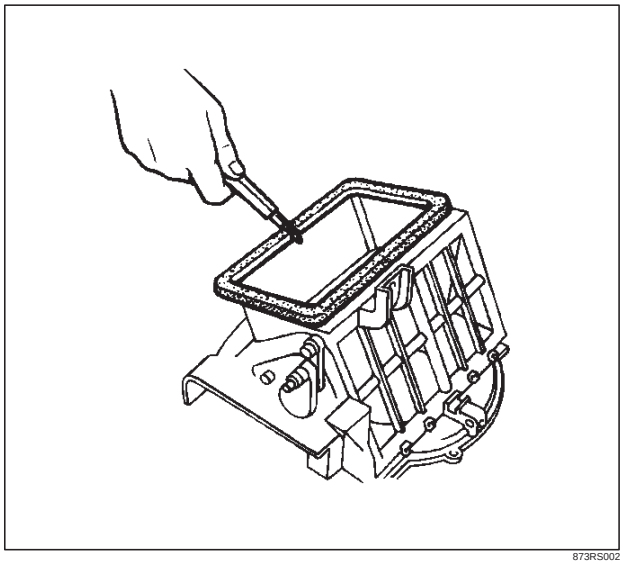

873RS002

6. Pull out the mode door while lifting up the catch of door lever.
7. Remove sub-lever.
8. Remove door lever.

Installation

To install, follow the removal steps in the reverse order, noting the following points:

1. Apply grease to the door lever and to the abrasive surface of the upper case.
2. Apply an adhesive to the parting face of the lining when assembling the upper case.

Downloaded from www.Manualslib.com manuals search engine

Blower Motor

Blower Motor and Associated Parts

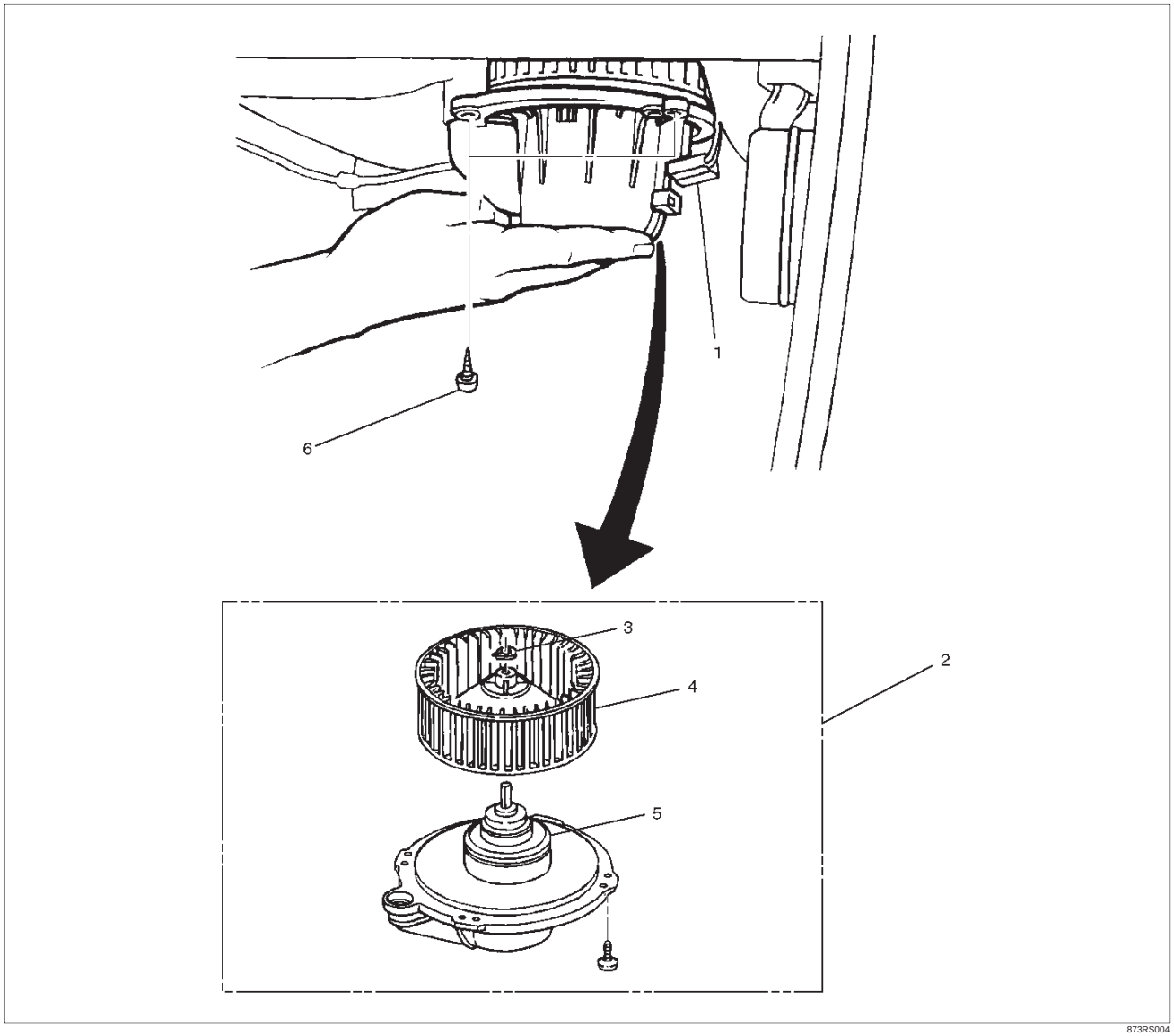

873RS004

Legend

(1) Blower Motor Connector
(2) Blower Motor Assembly
(3) Clip
(4) Fan
(5) Blower Motor
(6) Attaching Screw

Removal

1. Disconnect the battery ground cable.
2. Remove blower motor connector.
3. Remove attaching screw.
4. Remove blower motor assembly.
5. Remove clip.
6. Remove fan.
7. Remove blower motor.

Installation

To install, follow the removal steps in the reverse order.

Downloaded from www.Manualslib.com manuals search engine

Rear Heater Duct, Defroster Nozzle and Ventilation Duct

Rear Heater Duct, Defroster Nozzle, Ventilation Duct and Associated Parts

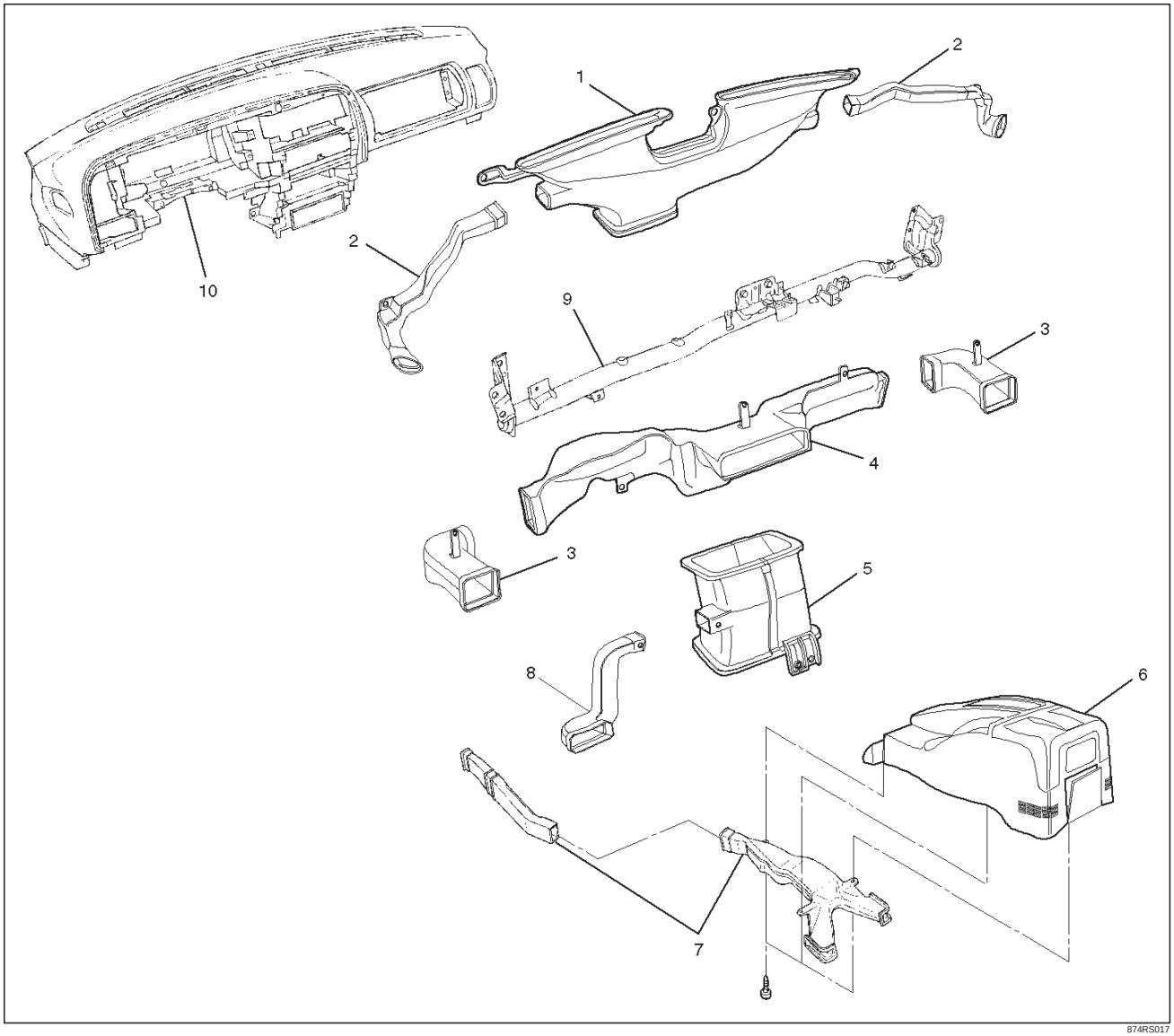

874RS017

Legend

(1) Center Defroster Nozzle
(2) Side Defroster Nozzle
(3) Side Ventilation Duct
(4) Center Ventilation Upper Duct
(5) Center Ventilation Lower Duct
(6) Center Console
(7) Rear Heater Duct
(8) Driver Lap Duct
(9) Cross Beam Assembly
(10) Instrument Panel Assembly

Removal

1. Disconnect the battery ground cable.
2. Remove instrument panel assembly.
   - Refer to Instrument Panel Assembly in Body and Accessories section.
3. Remove center ventilation upper duct.
4. Remove side ventilation duct.
5. Remove center ventilation lower duct.
6. Remove driver lap duct.
7. Remove center console.
8. Remove rear heater duct.
   - Refer to Consoles in Body and Accessories section.
9. Remove cross beam assembly.
   - Refer to Cross Beam Assembly in Body and Accessories section.

Downloaded from www.Manualslib.com manuals search engine

10. Remove side defroster nozzle.
11. Remove center defroster nozzle.

Installation

To install, follow the removal steps in the reverse order, noting the following point:

1. Connect each duct and nozzle securely leaving no clearance between them and making no improper matching.

Center and / or Drive Side Vent

Center Vent, Drive Side Vent and Associated Parts

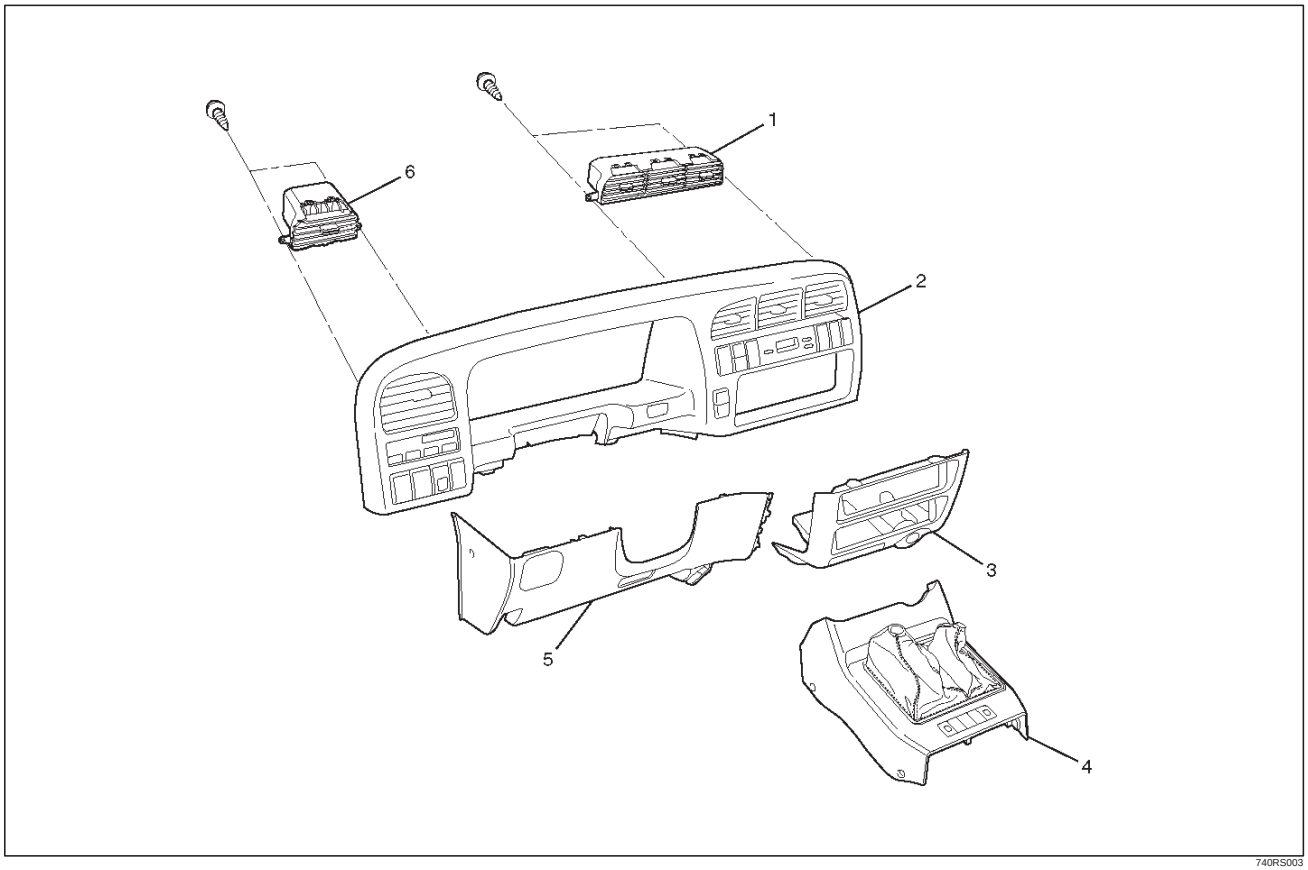

Legend

(1) Center Vent
(2) Meter Cluster Assembly
(3) Lower Cluster Assembly
(4) Front Console Assembly
(5) Instrument Panel Driver Lower Cover Assembly
(6) Side Vent

Removal

1. Disconnect the battery ground cable.
2. Remove front console assembly.
3. Remove lower cluster assembly.
4. Remove instrument panel driver lower cover assembly.
5. Remove meter cluster assembly.
   - Refer to Instrument Panel Assembly in Body and Accessories section.
6. Remove screws and the center vent from center cluster while prying up the center vent catch portions.
7. Remove screws and the side vent from the center cluster while prying up the vent catch portions.

Installation

To install, follow the removal steps in the reverse order.

Downloaded from www.Manualslib.com manuals search engine

Control Lever Assembly and / or Control Cable

Control Lever Assembly, Control Cable and Associated Parts

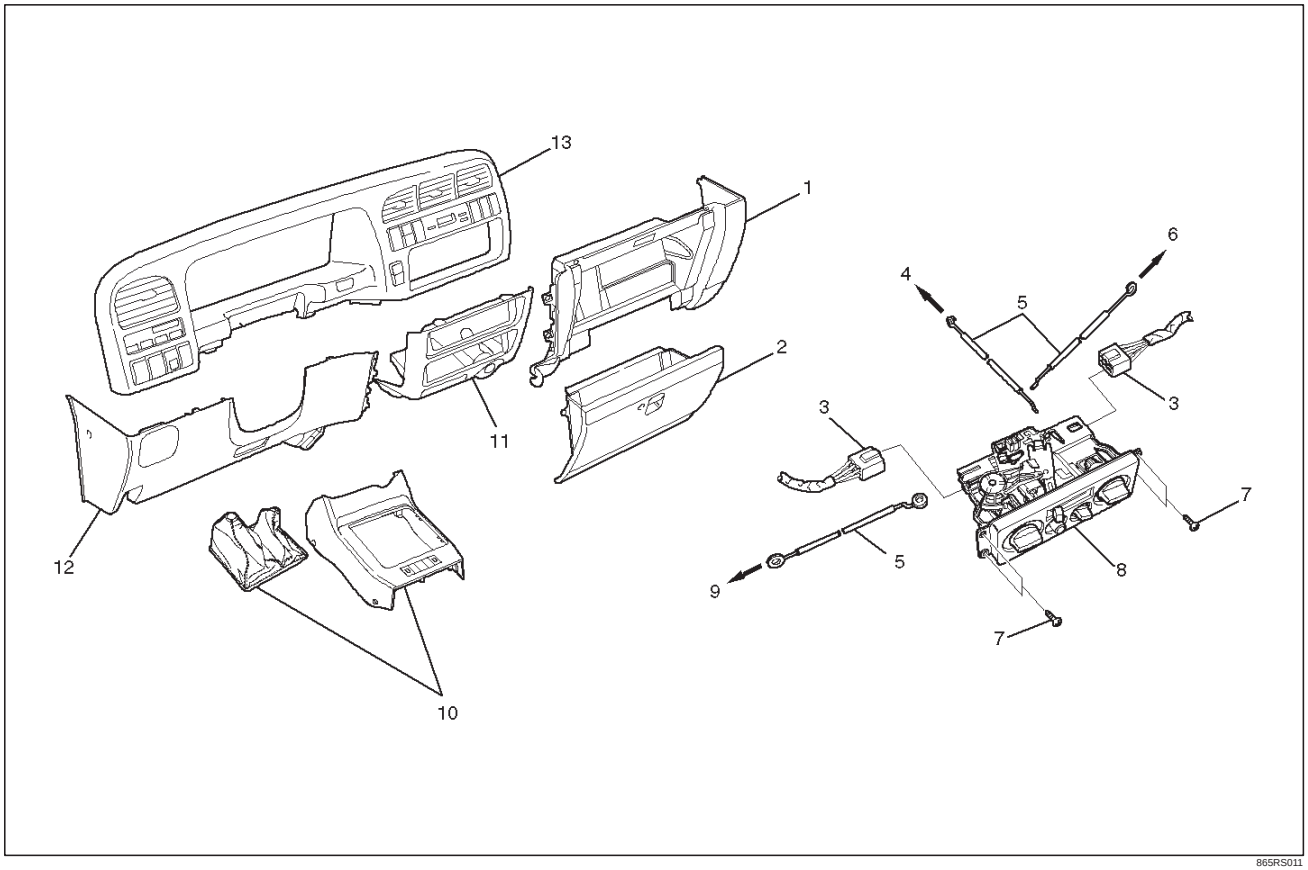

865RS011

Legend

(1) Instrument Panel Passenger Lower Cover Assembly
(2) Glove Box
(3) Fan Switch and Air Conditioning Switch Connector
(4) Temp Control Link Connection
(5) Control Cable
(6) Blower Assembly Connection
(7) Attaching Screws
(8) Control Lever Assembly
(9) Mode Control Link Connection
(10) Front Console Assembly
(11) Lower Cluster Assembly
(12) Instrument Panel Driver Lower Cover Assembly
(13) Meter Cluster Assembly

Removal

1. Disconnect the battery ground cable.
2. Remove front console assembly.
3. Remove lower cluster assembly.
4. Remove glove box.
5. Remove instrument panel passenger lower cover assembly.
6. Remove instrument panel driver lower cover assembly.
7. Remove meter cluster assembly.
   - Refer to Instrument Panel Assembly in Body and Accessories section.

Downloaded from www.Manualslib.com manuals search engine

8. Remove attaching screws.
   - Remove the four attaching screws.

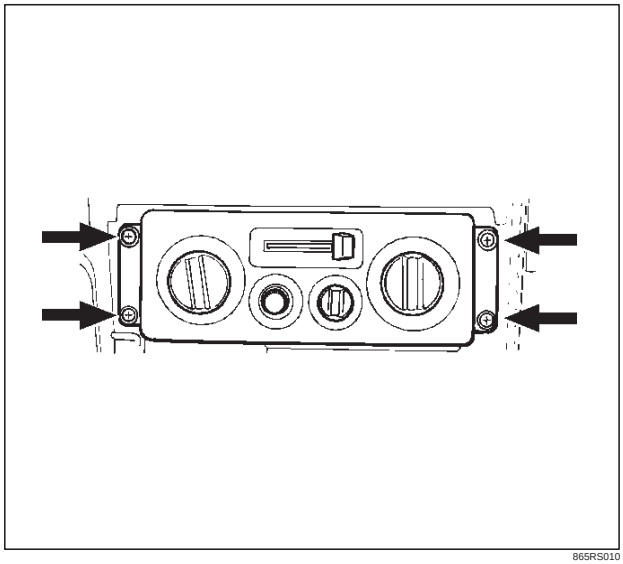

865RS010

9. Pull the control lever assembly out and disconnect the fan switch and air conditioning switch connectors.

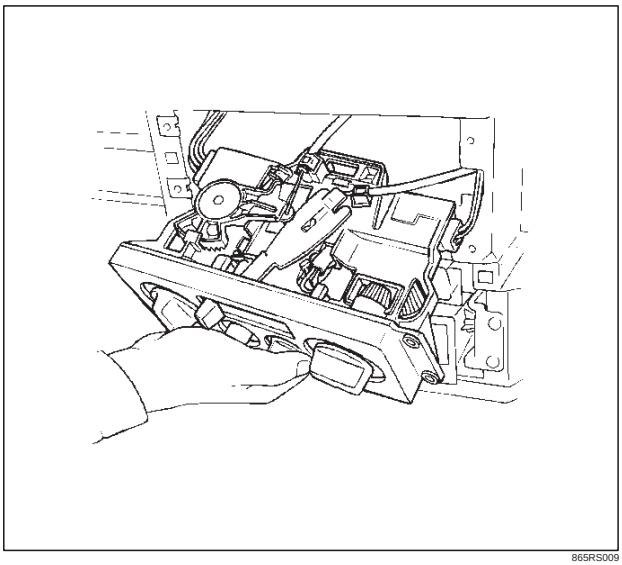

865RS009

10. Remove control lever assembly.
11. Remove control cable.

Installation

To install, follow the removal steps in the reverse order, noting the following points:

1. Adjust the control cable.

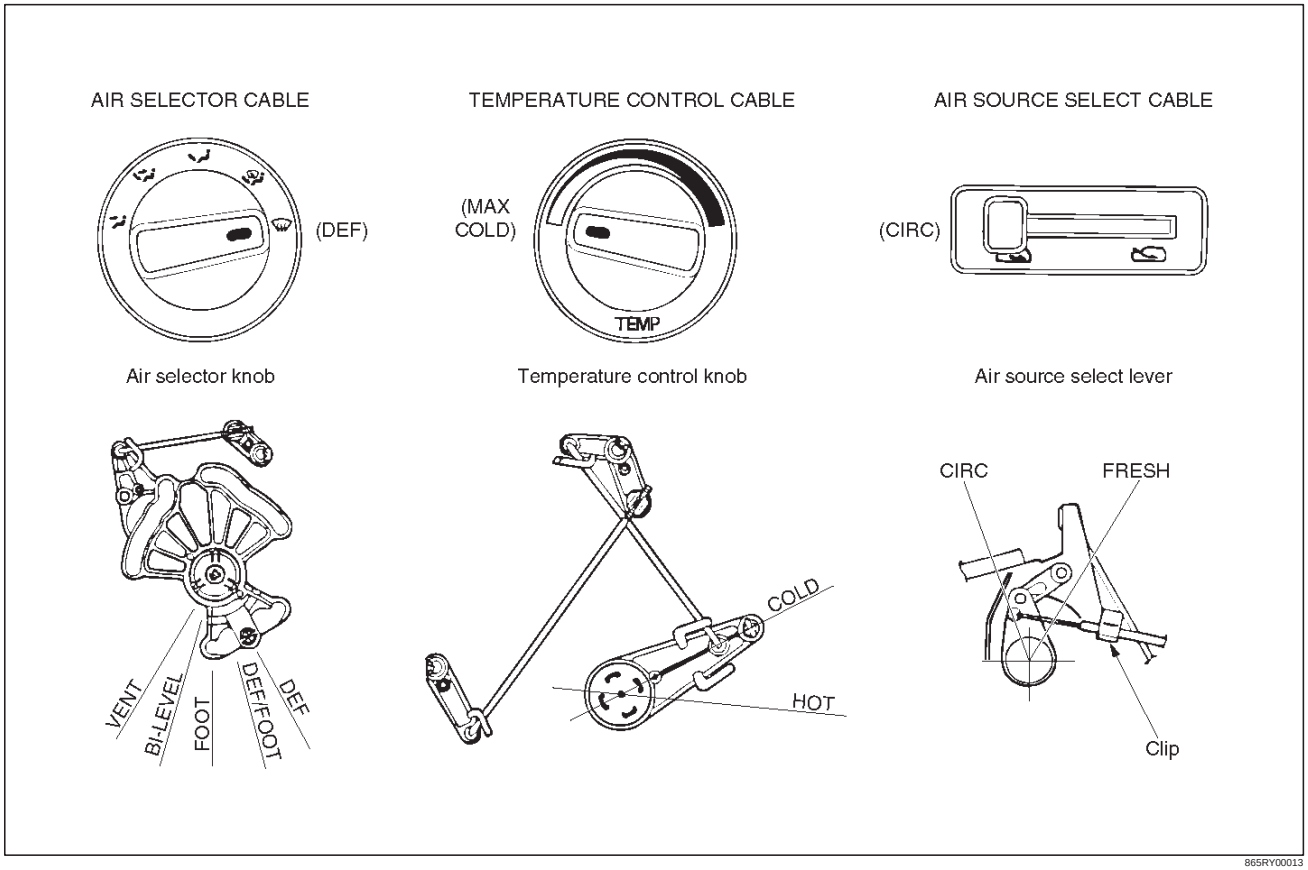

865RY00013

Downloaded from www.Manualslib.com manuals search engine

- Air source control cable.
  1. Slide the control lever to the left (“CIRC” position).
  2. Connect the control cable at the “CIRC” position of the link unit of the blower assembly and secure it with the clip.
- Temperature control cable.
  1. Turn the control knob to the left (“MAX COLD” position).
  2. Connect the control cable at the “COLD” position of the temperature control link of the heater unit and secure it with the clip.
- Air select control cable
  1. Turn the control knob to the right (“DEFROST” position).
  2. Connect the control cable at the “DEFROST” position of the mode control link of the heater unit and secure it with the clip.

2. Check the control cable operation.

Control Panel Illumination Bulb

Control Panel Illumination Bulb and Associated Parts

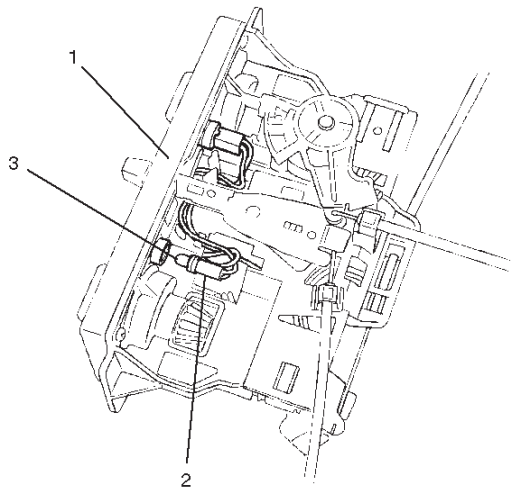

865RS007

Legend

(1) Control Lever Assembly
(2) Bulb Socket
(3) Illumination Bulb

Removal

1. Disconnect the battery ground cable.
2. Remove control lever assembly.
   - Refer to Control Lever Assembly in this section.
3. Pull out the bulb socket from the panel by turning it counterclockwise.
4. Pull the illumination bulb from the socket.

Installation

To install, follow the removal steps in the reverse order.

Downloaded from www.Manualslib.com manuals search engine

Resistor

Resistor and Associated Parts

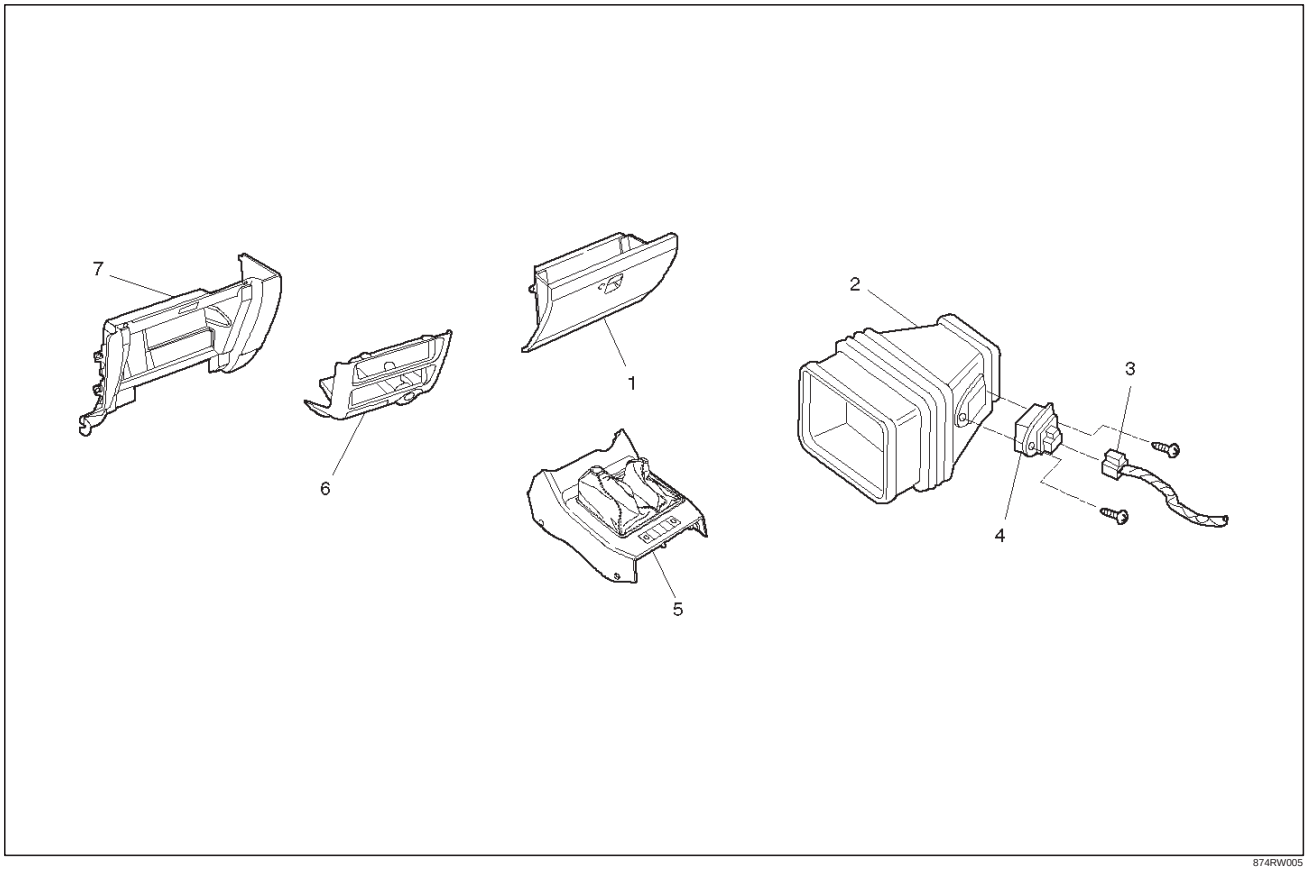

Legend

(1) Glove Box
(2) Duct (Heater only)
(3) Resistor Connector
(4) Resistor
(5) Front Console
(6) Lower Cluster
(7) Instrument Panel Passenger Lower Cover Assembly

Removal

1. Disconnect the battery ground cable.
2. Remove front console.
3. Remove lower cluster.
4. Remove glove box.
5. Remove instrument panel passenger lower cover assembly.
   - Refer to Instrument Panel Assembly in Body and Accessories section.
6. Remove resistor connector.
7. Remove duct (heater only).
8. Remove resistor.

Installation

To install, follow the removal steps in the reverse order.

Downloaded from www.Manualslib.com manuals search engine

Air Conditioning System

General Description

Air Conditioning Refrigerant Cycle Construction

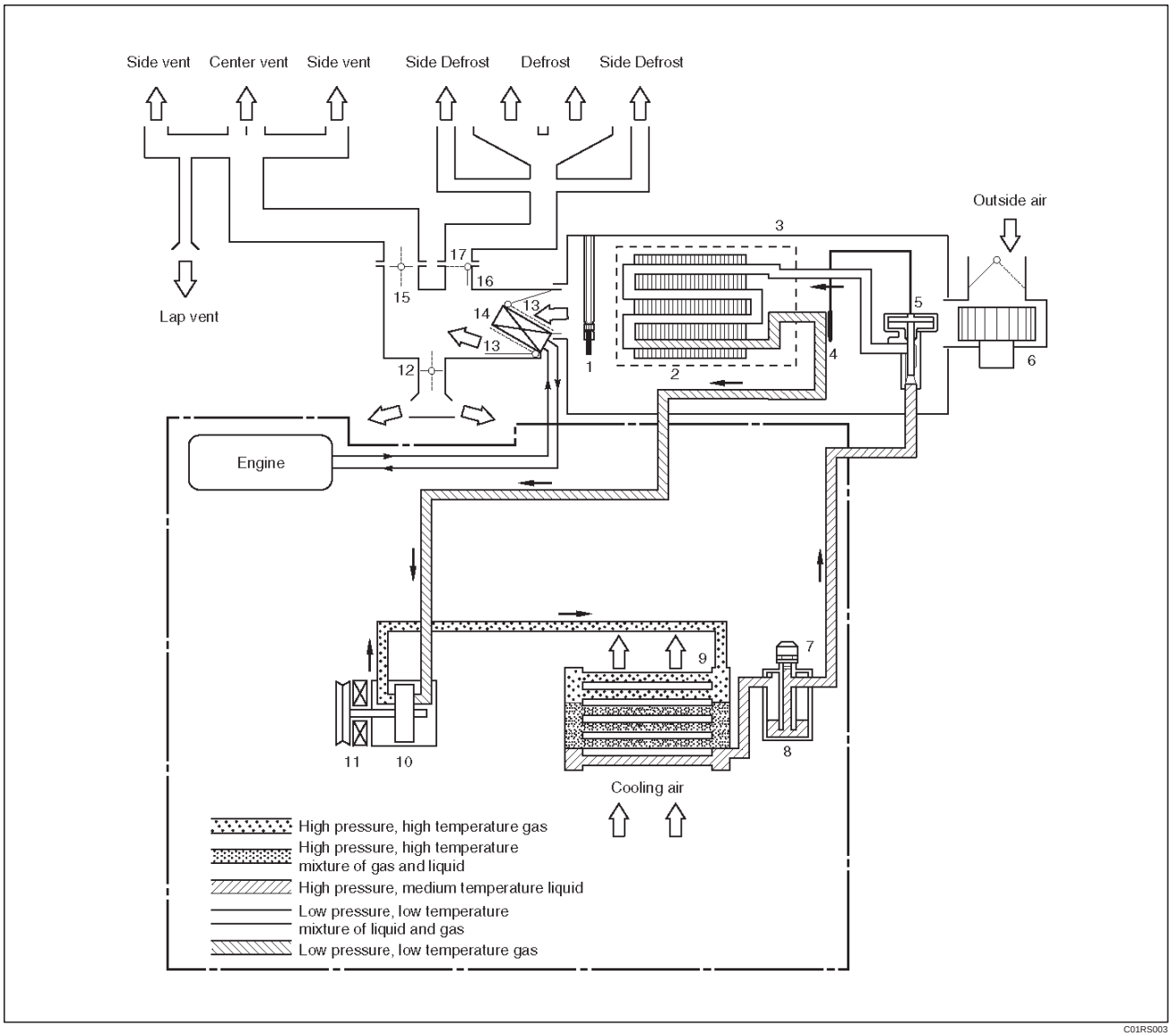

C01RS003

Legend

(1) Electronic Thermostat
(2) Evaporator Core
(3) Evaporator Assembly
(4) Temperature Sensor
(5) Expansion Valve
(6) Blower Motor
(7) Dual Pressure Switch
(8) Receiver/Drier
(9) Condenser
(10) Compressor
(11) Magnetic Clutch
(12) Mode (HEAT) Control Door
(13) Temp. Control Door (Air Mix Door)
(14) Heater Core
(15) Mode (VENT) Control Door
(16) Heater Unit
(17) Mode (DEF) Control Door

The refrigeration cycle includes the following four processes as the refrigerant changes repeatedly from liquid to gas and back to liquid while circulating.

Evaporation

The refrigerant is changed from a liquid to a gas inside the evaporator. The refrigerant mist that enters the

Downloaded from www.Manualslib.com manuals search engine

evaporator vaporizes readily. The liquid refrigerant removes the required quantity of heat (latent heat of vaporization) from the air around the evaporator core cooling fins and rapidly vaporizes. Removing the heat cools the air, which is then radiated from the fins and lowers the temperature of the air inside the vehicle.
The refrigerant liquid sent from the expansion valve and the vaporized refrigerant gas are both present inside the evaporator as the liquid is converted to gas.
With this change from liquid to gas, the pressure inside the evaporator must be kept low enough for vaporization to occur at a lower temperature. Because of that, the vaporized refrigerant is sucked into the compressor.

Compression

The refrigerant is compressed by the compressor until it is easily liquefied at normal temperature.
The vaporized refrigerant in the evaporator is sucked into the compressor. This action maintains the refrigerant inside the evaporator at a low pressure so that it can easily vaporize, even at low temperatures close to 0˚C(32˚F).
Also, the refrigerant sucked into the compressor is compressed inside the cylinder to increase the pressure and temperature to values such that the refrigerant can easily liquefy at normal ambient temperatures.

Condensation

The refrigerant inside the condenser is cooled by the outside air and changes from gas to liquid.
The high temperature, high pressure gas coming from the compressor is cooled and liquefied by the condenser with outside air and accumulated in the receiver/drier. The heat radiated to the outside air by the high temperature, high pressure gas in the compressor is called heat of condensation. This is the total quantity of heat (heat of vaporization) the refrigerant removes from the vehicle interior via the evaporator and the work (calculated as the quantity of heat) performed for compression.

Expansion

The expansion valve lowers the pressure of the refrigerant liquid so that it can easily vaporize.
The process of lowering the pressure to encourage vaporization before the liquefied refrigerant is sent to the evaporator is called expansion. In addition, the expansion valve controls the flow rate of the refrigerant liquid while decreasing the pressure.
That is, the quantity of refrigerant liquid vaporized inside the evaporator is determined by the quantity of heat which must be removed at a prescribed vaporization temperature. It is important that the quantity of refrigerant be controlled to exactly the right value.

Compressor

The compressor performs two main functions:
It compresses low-pressure and low-temperature refrigerant vapor from the evaporator into high-pressure and high-temperature refrigerant vapor to the condenser.
It pumps refrigerant and refrigerant oil through the air conditioning system.
This vehicle is equipped with six-cylinder axle plate compressor (1).
The specified amount of the compressor oil is 240cc (8.0 fl. oz.).
The oil used in the HFC-134a system compressor differs from that used in R-12 systems.
Also, compressor oil to be used varies according to the compressor model. Be sure to avoid mixing two or more different types of oil.
If the wrong oil is used, lubrication will be poor and the compressor will seize or malfunction.
The magnetic clutch connector is a waterproof type.

Magnetic Clutch

The compressor is driven by the drive belt from the crank pulley of the engine. If the compressor is activated each time the engine is started, this causes too much load to the engine. The magnetic clutch (3) transmits the power from the engine to the compressor and activates it when the air conditioning is ON. Also, it cuts off the power from the engine to the compressor when the air conditioning is OFF. Refer to Compressor in this section for magnetic clutch repair procedure.

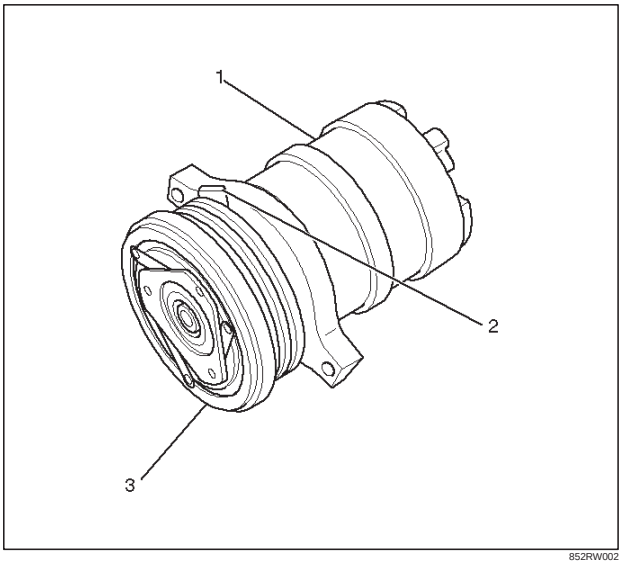

852RW002

Condenser

Also, it functions to cool and liquefy the high-pressure and high-temperature vapor sent from the compressor by the radiator fan or outside air.
A condenser may malfunction in two ways: it may leak, or it may be restricted. A condenser restriction will result in excessive compressor discharge pressure. If a partial restriction is present, the refrigerant expands after passing through the restriction.
Thus, ice or frost may form immediately after the restriction. If air flow through the condenser or radiator is blocked, high discharge pressures will result. During normal condenser operation, the refrigerant outlet line will be slightly cooler than the inlet line.
The vehicle is equipped with the parallel flow type condenser. A larger thermal transmission area on the inner surface of the tube allows the radiant heat to increase and the ventilation resistance to decrease.

Downloaded from www.Manualslib.com manuals search engine

The refrigerant line connection has a bolt at the block joint, for easy servicing.
The condenser assembly (6) is located in front of the radiator. It provides rapid heat transfer from the refrigerant to the cooling fins.

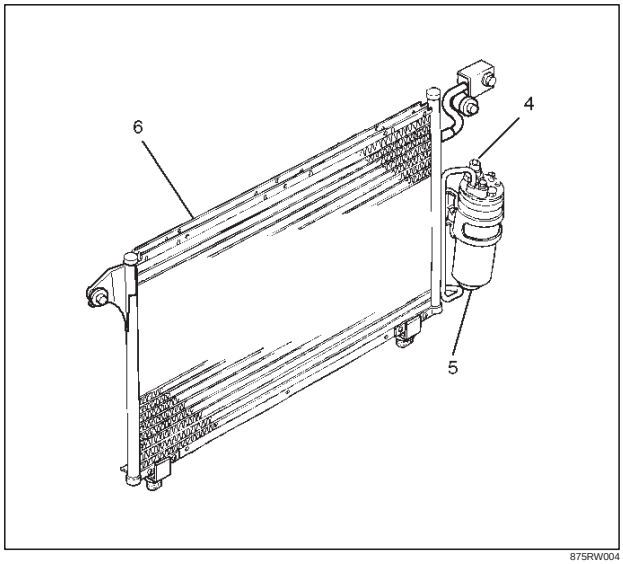

875RW004

Receiver / Drier

The receiver/drier (5) performs four functions:

- As the quantity of refrigerant circulated varies depending on the refrigeration cycle conditions, sufficient refrigerant is stored for the refrigeration cycle to operate smoothly in accordance with fluctuations in the quantity circulated.
- The liquefied refrigerant from the condenser is mixed with refrigerant gas containing air bubbles. If refrigerant containing air bubbles. Is sent to the expansion valve, the cooling capacity will decrease considerably. Therefore, the liquid and air bubbles are separated and only the liquid is sent to the expansion valve.
- The receiver/drier utilizes a filter and drier to remove the dirt and water mixed in the cycling refrigerant.
- The sight glass, installed on top of the receiver/drier, shows the state of the refrigerant.

A receiver/drier may fail due to a restriction inside the body of the unit. A restriction at the inlet to the receiver/drier will cause high pressure.
Outlet restrictions will be indicated by low pressure and little or no cooling. An excessively cold receiver/drier outlet may indicate a restriction.
The receiver/drier of this vehicle is made of aluminum with a smaller tank. It has a 300cc refrigerant capacity.
The refrigerant line connection has a bolt at the block joint, for easy servicing.

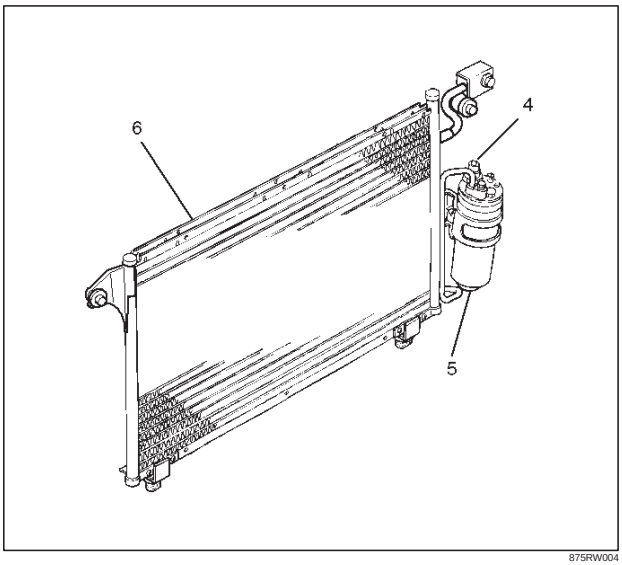

875RW004

Pressure Switch

The pressure switch (Dual pressure switch) (4) is installed on the upper part of the receiver/drier, to detect excessively high pressure (high pressure switch) and prevent compressor seizure due to the refrigerant leaking (low pressure switch), so that the compressor is able to be turned “ON” or “OFF”.
The pressure characteristics of HFC-134a refrigerant differ from those of R-12. Thus, the pressure switch operation for HFC-134a systems has been changed from R-12.

Compressor	ON (kPa/psi)	OFF (kPa/psi)
Low-pressure control	186.3±29.4 (27.0±4.3)	176.5±19.6 (25.6±2.8)
High-pressure control	2353.6±196.1 (341.3±28.4)	2942.0±196.1 (426.6±28.4)

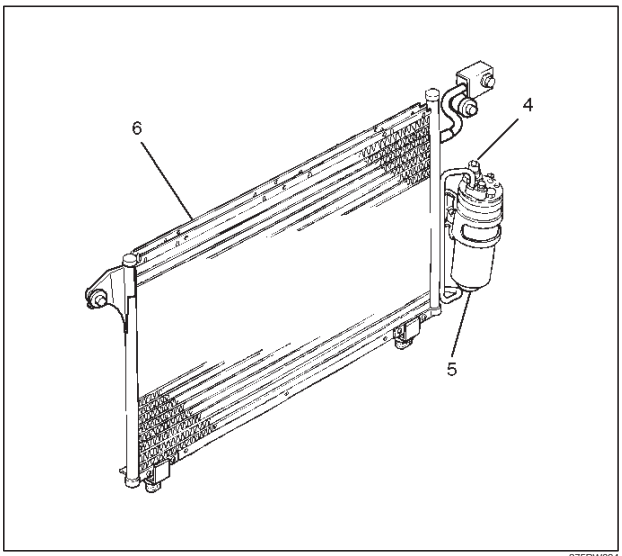

875RW004

Downloaded from www.Manualslib.com manuals search engine

Expansion Valve

This expansion valve (1) is an external pressure type and it is installed at the evaporator intake port.
The expansion valve converts the high pressure liquid refrigerant sent from the receiver/drier to a low pressure liquid refrigerant by forcing it through a tiny port before sending it to the evaporator (2).
This type of expansion valve consists of a temperature sensor, diaphragm, ball valve, ball seat, spring adjustment screw, etc.
The temperature sensor contacts the evaporator outlet pipe, and converts changes in temperature to pressure. It then transmits these to the top chamber of the diaphragm.
The refrigerant pressure is transmitted to the diaphragm's bottom chamber through the external equalizing pressure tube.
The ball valve is connected to the diaphragm. The opening angle of the expansion valve is determined by the force acting on the diaphragm and the spring pressure.
The expansion valve regulates the flow rate of the refrigerant. Accordingly, when a malfunction occurs to this expansion valve, both discharge and suction pressure get low, resulting in insufficient cooling capacity of the evaporator.
The calibration has been changed to match the characteristics of HFC-134a.

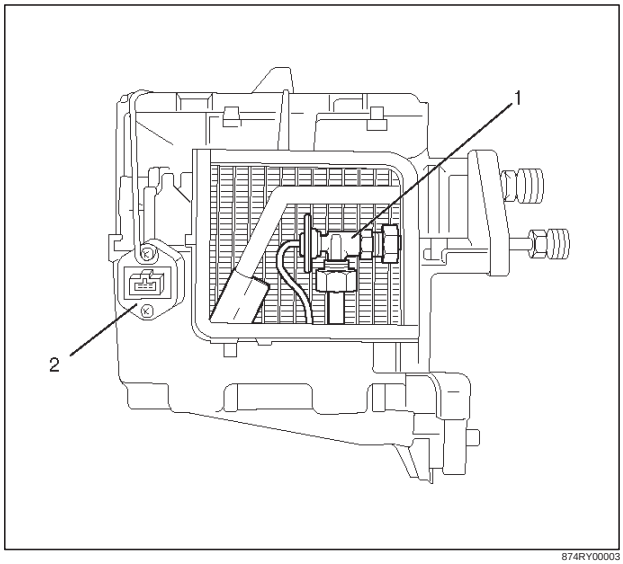

874RY00003

Evaporator

The evaporator cools and dehumidifies the air before the air enters the passenger compartment. High-pressure liquid refrigerant flows through the expansion valve (2) into the low-pressure area of the evaporator. The heat in the air passing through the evaporator core (1) is lost to the cooler surface of the core, thereby cooling the air.
As heat is lost between the air and the evaporator core surface, moisture in the vehicle condenses on the outside surface of the evaporator core and is drained off as water.
When the evaporator malfunctions, the trouble will show up as an inadequate supply of cool air. The cause is typically a partially plugged core due to dirt, or a malfunctioning blower motor.
The evaporator core with a laminate louver fin is a single-sided tank type where only one tank is provided under the core.

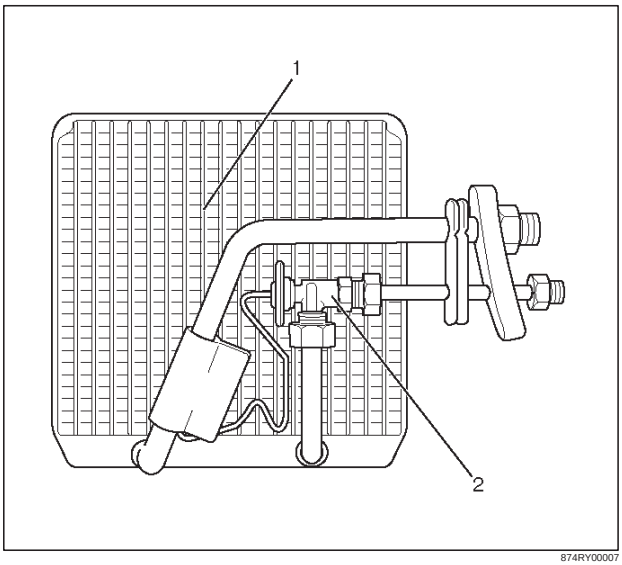

874RY00007

Electronic Thermostat

The thermostat consists of the thermo sensor (1) and thermostat unit (4) which functions electrically to reduce the noises being generated while the system is in operation.
The electronic thermo sensor (1) is mounted at the evaporator core (2) outlet and senses the temperature of the cool air from the evaporator (3). Temperature signals are input to the thermostat unit. This information is compared by the thermo unit and results in the output to operate the A/C thermostat relay and turn the magnetic clutch ON or OFF to prevent evaporator freeze-up.

Downloaded from www.Manualslib.com manuals search engine

A characteristic of the sensor is that the resistance decreases as the temperature increases and the resistance increases as the temperature decreases.

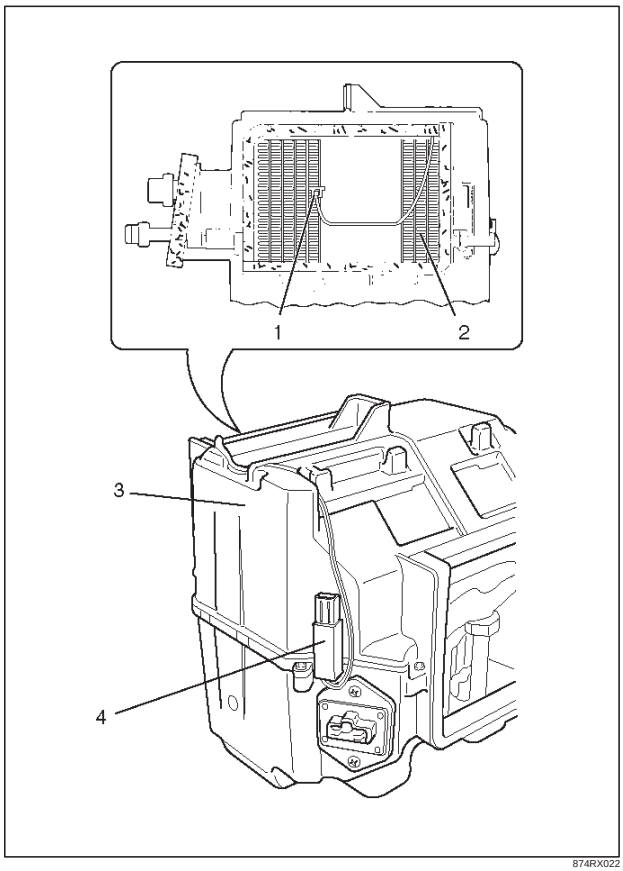

Refrigerant Line

Restriction in the refrigerant line will be indicated by:

1. Suction line — A restricted suction line will cause low suction pressure at the compressor, low discharge pressure and little or no cooling.
2. Discharge line — A restriction in the discharge line generally will cause the discharge line to leak.
3. Liquid line — A liquid line restriction will be evidenced by low discharge and suction pressure and insufficient cooling.

Refrigerant flexible hoses that have a low permeability to refrigerant and moisture are used. These low permeability hoses have a special nylon layer on the inside.

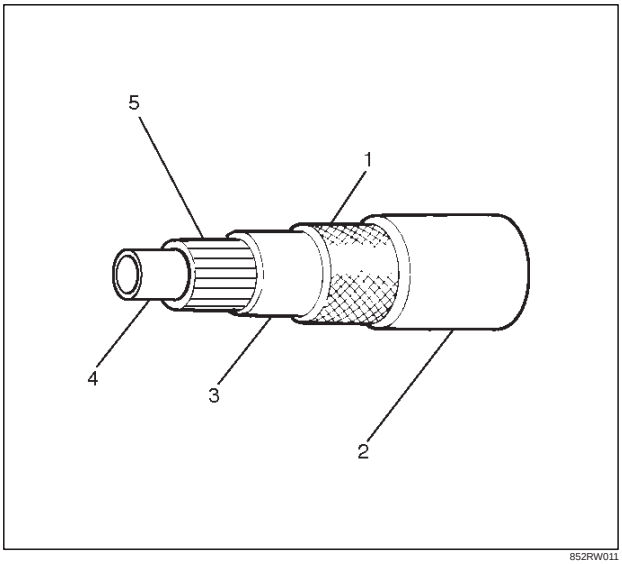

Legend

(1) Pressure Resistance Layer (Polyester Braid)
(2) Moisture Resistance AND Outer Protector Layer
(3) Heat Resistance Layer
(4) Heat Resistance Core Layer (Neoprene)
(5) Low Permeation Layer (Nylon Barner)

Downloaded from www.Manualslib.com manuals search engine

Air Conditioning Parts

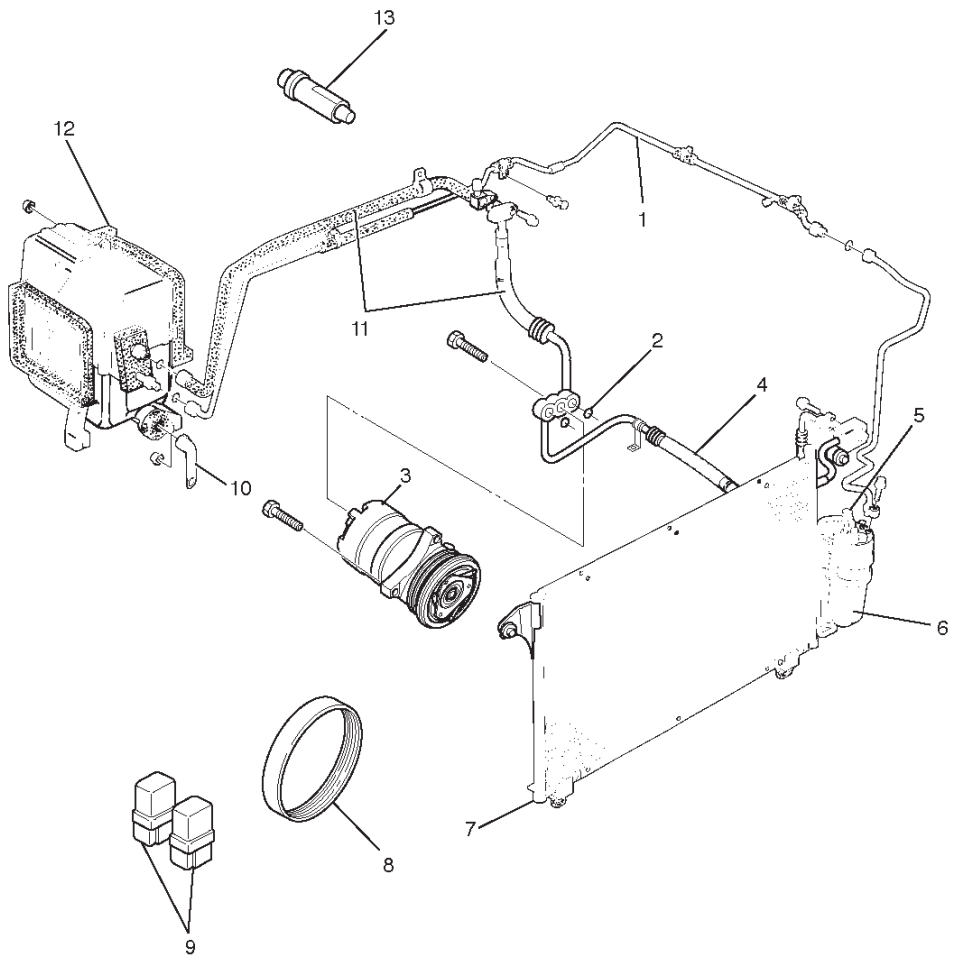

852RW009

Legend

(1) Liquid Line (High-Pressure Pipe)
(2) O-ring
(3) Compressor
(4) Discharge Line (High-Pressure Hose)
(5) Pressure Switch
(6) Receiver Drier
(7) Condenser Assembly
(8) Drive Belt
(9) Relay
(10) Drain Hose
(11) Suction Line (Low-Pressure Hose)
(12) Evaporator Assembly
(13) A/C Switch

Downloaded from www.Manualslib.com manuals search engine

Wiring Diagram

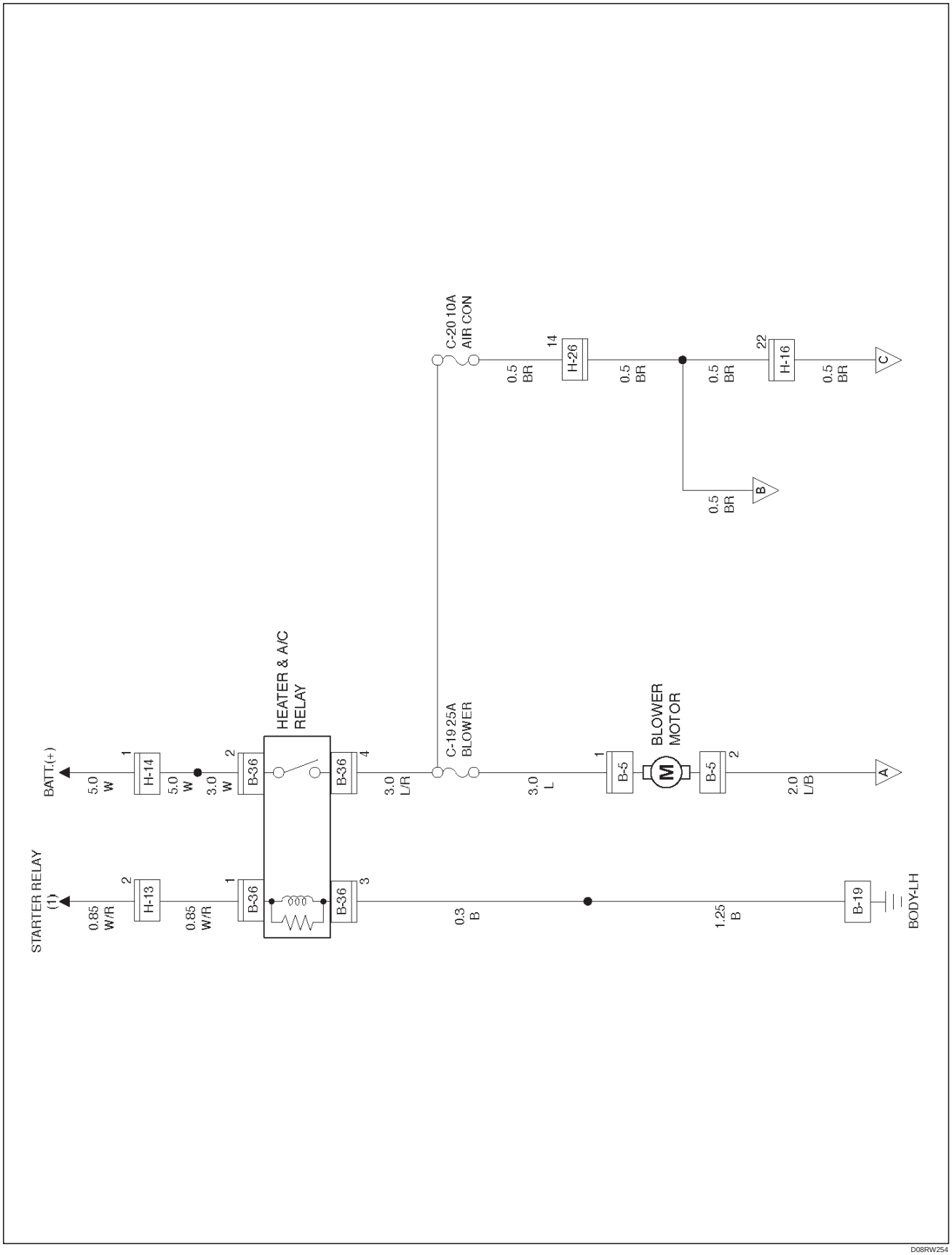

D08RW254

Downloaded from www.Manualslib.com manuals search engine

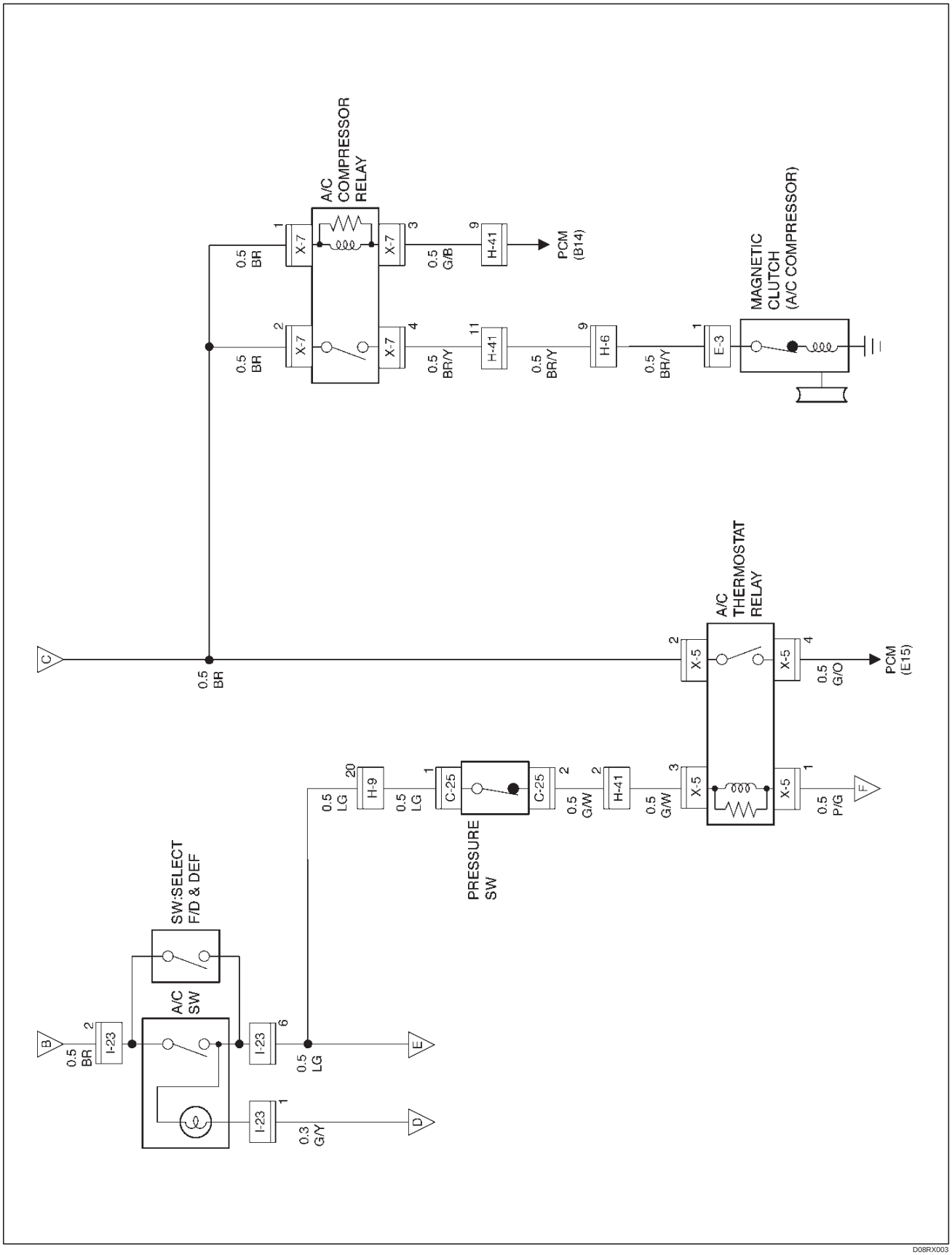

D08RX003

Downloaded from www.Manualslib.com manuals search engine

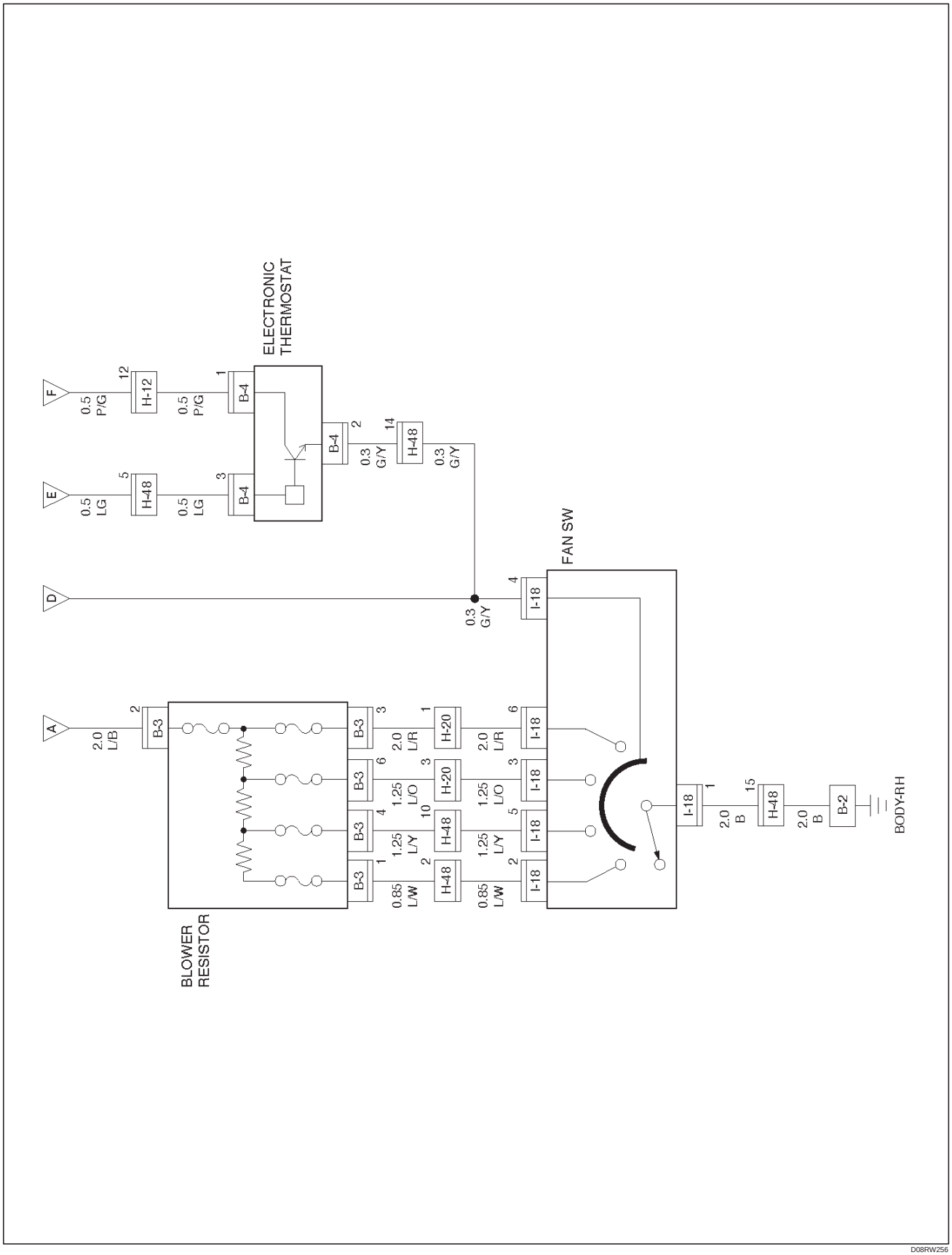

D08RW256

Downloaded from www.Manualslib.com manuals search engine

Diagnosis

Air Conditioning Cycle Diagnosis

Condition	Possible cause	Correction
No cooling or insufficient cooling.	Magnetic clutch does not run.	Refer to “Magnetic Clutch Diagnosis” in this section.
	Compressor is not rotating properly. Drive belt is loose or broken.	Adjust the drive belt to the specified tension or replace the drive belt.
	Compressor is not rotating properly. Magnetic clutch face is not clean and slips.	Clean the magnetic clutch face or replace.
	Compressor is not rotating properly. Incorrect clearance between magnetic drive plate and pulley.	Adjust the clearance. Refer to Compressor in this section.
	Compressor is not rotating properly. Compressor oil leaks from the shaft seal or shell.	Replace the compressor
	Compressor is not rotating properly. Compressor is seized.	Replace the compressor
	Insufficient or excessive charge of refrigerant.	Discharge and recover the refrigerant. Recharge to the specified amount.
	Leaks in the refrigerant system.	Check the refrigerant system for leaks and repair as necessary. Discharge and recover the refrigerant. Recharge to the specified amount.
	Condenser is clogged or insufficient radiation.	Clean the condenser or replace as necessary.
	Temperature control link unit of the heat unit is defective.	Repair the link unit.
	Unsteady operation due to a foreign substance in the expansion valve.	Replace the expansion valve.
	Poor operation of the electronic thermostat.	Check the electronic thermostat and replace as necessary.
Insufficient velocity of cooling air.	Evaporator clogged or frosted.	Check the evaporator core and replace or clean the core.
	Air leaking from the cooling unit or air duct.	Check the evaporator and duct connection, then repair as necessary.
	Blower motor does not rotate properly.	Refer to Fan Control Knob (Fan Switch) Diagnosis in this section.

*For the execution of the charging and discharging operation in the table above, refer to Recovery, Recycling, Evacuating and Charging in this section.

Downloaded from www.Manualslib.com manuals search engine

Checking The Refrigerant System With Manifold Gauge

Since Refrigerant-134a (HFC-134a) is used in the air conditioning system in this vehicle, be sure to use manifold gauges, charging hoses and other air conditioning service tools for HFC-134a when checking the refrigerant system.

Conditions:

- Run the engine at idling
- Air conditioning switch is “ON”
- Run the blower motor at “HIGH” position
- Temperature control lever set to “MAX COLD”
- Air source selector lever at “CIRC”
- Open the engine hood
- Close all the doors

Normal Pressure:

- At ambient temperature: approx. 25–30˚C (77–86˚F).
- At low-pressure side: approx. 147.1–294.2 kPa (21.3–42.7 psi).
- At high-pressure side: approx. 1372.9–1863.3 kPa (199.1–270.2 psi).

Refer to the table on the refrigerant pressure-temperature relationship in this section.

HFC-134a Pressure-Temperature Relationship			
Pressure		Temperature	
(kPa)	(psi)	(˚C)	(˚F)
36	5.3	–20	–4.4
67	9.7	–15	5
104	15	–10	14
147	21	–5	23
196	28	0	32
255	37	5	41
314	45	10	50
392	57	15	59
471	68	20	68
569	82	25	77
677	98	30	86
785	114	35	95
912	132	40	104
1059	154	45	113
1216	176	50	122

Downloaded from www.Manualslib.com manuals search engine

Connect The Manifold Gauge

Low-pressure hose (LOW) — Suction side
High pressure hose (HI) — Discharge side

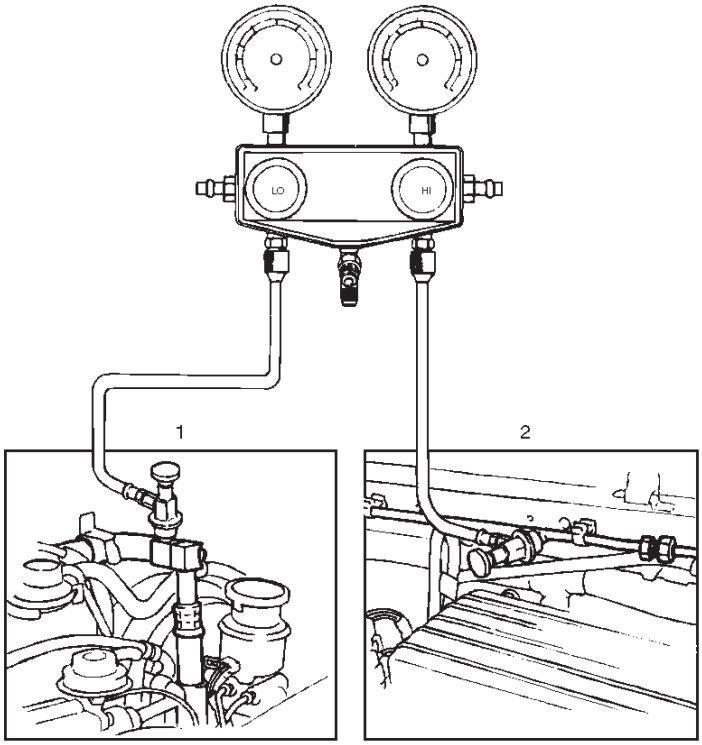

901RS137

Legend

(1) Low Side
(2) High Side

Condition	Possible cause	Correction
Discharge (High Gauge) Pressure Abnormally High	Condenser clogged or dirty.	Clean the condenser fins
	Cooling fan does not operate properly.	Check the cooling fan operation.
Discharge (High Gauge) Pressure Abnormally High. Insufficient cooling.	Excessive refrigerant in system.	Discharge and recover refrigerant. Recharge to specified amount.
Discharge (High Gauge) Pressure Abnormally High. High pressure gauge drop. (After stopping A/C, the pressure drops approx. 196 kPa (28 psi) quickly)	Air in system.	Evacuate and charge refrigerant system.
Discharge (High Gauge) Pressure Abnormally Low. Insufficient cooling	Insufficient refrigerant in system.	Check for leaks. Discharge and recover the refrigerant. Recharge to the specified amount.
Discharge (High Gauge) Pressure Abnormally Low. Low pressure gauge indicates vacuum.	Clogged or defective expansion valve.	Replace the expansion valve.

Downloaded from www.Manualslib.com manuals search engine

Condition	Possible cause	Correction
Discharge (High Gauge) Pressure Abnormally Low. Frost or dew on refrigerant line before and after the receiver/drier or expansion valve, and low pressure gauge indicates vacuum.	Restriction caused by debris or moisture in the receiver/drier.	Check system for restriction and replace the receiver/drier.
Discharge (High Gauge) Pressure Abnormally Low. High and low pressure gauge balanced quickly. (After turned off A/C)	Compressor seal defective	Repair or replace the compressor.
	Poor compression due to a defective compressor gasket.	Repair or replace the compressor.
Suction (Low Gauge) Pressure Abnormally High. Low pressure gauge (Low pressure gauge is lowered after condenser is cooled by water.)	Excessive refrigerant in system.	Discharge and recover refrigerant Recharge to specified amount.
Suction (Low Gauge) Pressure Abnormally High. Low pressure hose temperature. (Low pressure hose temperature around the compressor refrigerant line connector is lower than around evaporator.)	Unsatisfactory valve operation due to defective temperature sensor of expansion valve.	Replace the expansion valve.
	Expansion valve opens too long.	Replace the expansion valve.
Suction (Low Gauge) Pressure Abnormally High. High and low pressure gauge balanced quickly. (After turned off A/C)	Compressor gasket is defective.	Repair or replace the compressor.
Suction (Low Gauge) Pressure Abnormally Low. Insufficient cooling.	Insufficient refrigerant in system.	Check for leaks. Discharge and recover the refrigerant. Recharge to specified amount.
Suction (Low Gauge) Pressure Abnormally Low. Frost on the expansion valve inlet line	Expansion valve clogged.	Replace the expansion valve.
Suction (Low Gauge) Pressure Abnormally Low Receiver/drier inlet and outlet refrigerant line temperature. (A distinct difference in temperature develops.)	Receiver/Drier clogged.	Replace the receiver/drier.
Suction (Low Gauge) Pressure Abnormally Low. Expansion valve outlet refrigerant line. (Not cold and low pressure gauge indicates vacuum.)	Expansion valve temperature sensor is defective.	Replace the expansion valve.
Suction (Low Gauge) Pressure Abnormally Low. When the refrigerant line is clogged or blocked, the low pressure gauge reading will decrease, or a vacuum reading may be shown.	Clogged or blocked refrigerant line.	Replace refrigerant line.
Suction (Low Gauge) Pressure Abnormally Low. Evaporator core is frozen.	Thermo switch defective.	Replace thermo switch.

Downloaded from www.Manualslib.com manuals search engine

Condition	Possible cause	Correction
Suction (Low Gauge) and Discharge (High Gauge) Pressure Abnormally High. Insufficient cooling.	Excessive refrigerant in system.	Discharge and recover the refrigerant, the Recharge to the specified amount.
	Condenser clogged or dirty.	Clean the condenser fins.
Suction (Low Gauge) and Discharge (High Gauge) Pressure Abnormally High. Suction (Low) pressure hose (Not cold).	Air in system.	Evacuate and charge refrigerant.
Suction (Low Gauge) and Discharge (High Gauge) Pressure Abnormally Low. Insufficient cooling	Insufficient refrigerant in system.	Check for leaks. Discharge and recover refrigerant. Recharge to specified amount.

A/C — Air Conditioning

Downloaded from www.Manualslib.com manuals search engine

Magnetic Clutch Diagnosis

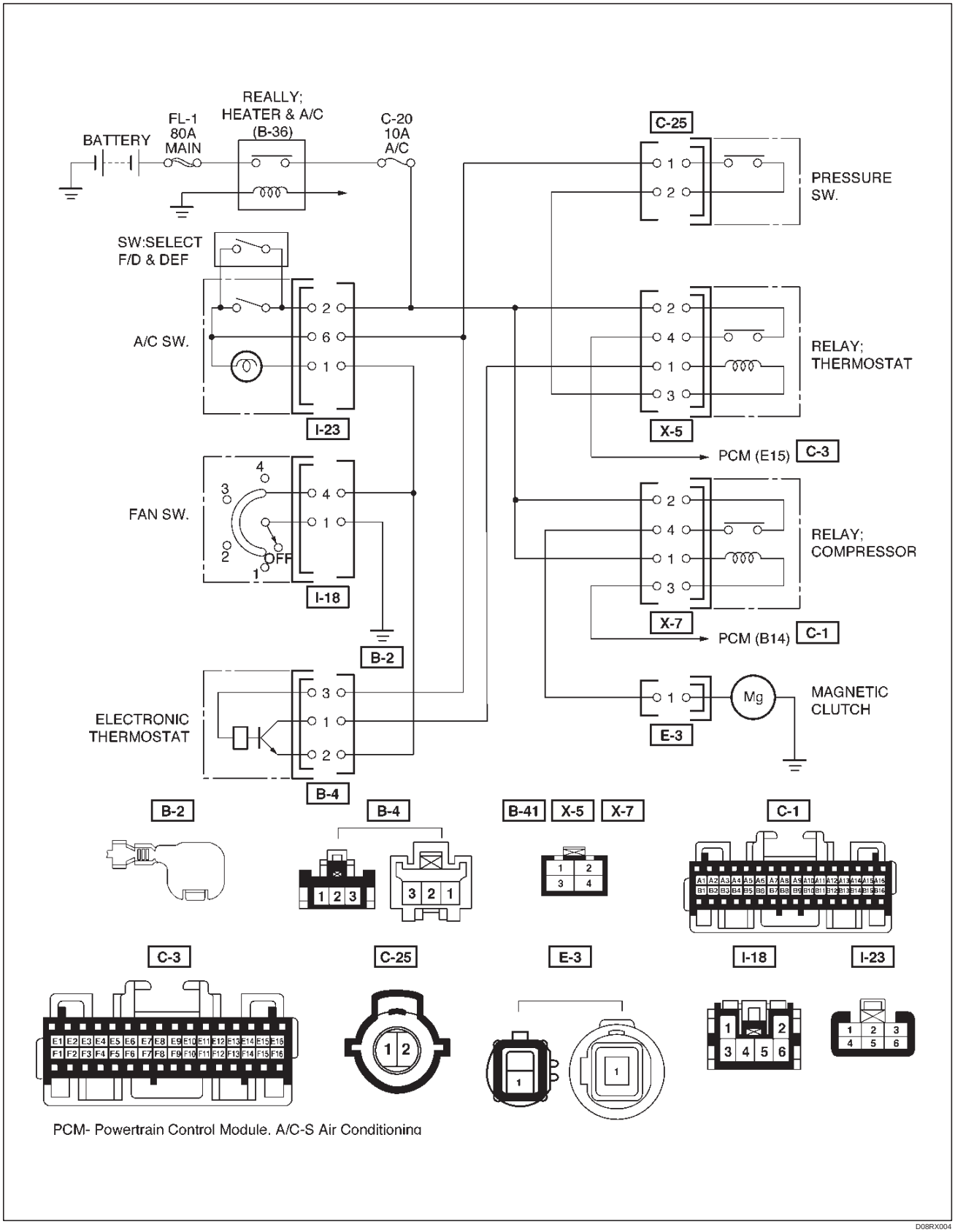

D08RX004

When the air conditioning switch and the fan control knob (fan switch) are turned on with the engine running, current flows through the thermostat and the compressor relay to activate the magnetic clutch.

Downloaded from www.Manualslib.com manuals search engine

The air conditioning can be stopped by turning off the air conditioning switch or the fan control knob (fan switch). However, even when the air conditioning is in operation, the electronic thermostat, the pressure switch or the Powertrain Control Module (PCM) is used to stop the air conditioning temporarily by turning off the magnetic clutch in the prearranged conditions to reduce the engine load which is being caused by the rise in the engine coolant temperature, and the acceleration of the vehicle, etc.
For the inspection of the relays, switches and units in the table, refer to “Individual Inspection” in this section.

Magnetic Clutch Does Not Run

Step	Action	Yes	No
1	Are No. C-20 (10A) fuse and No. C-19 (25A) fuse OK?	Go to Step 2	Replace
2	Are heater and A/C (B-36), thermostat (X-5), and compressor (X-7) relays OK?	Go to Step 3	Replace
3	Is pressure switch (dual pressure switch) OK?	Go to Step 4	Switch defective or insufficient refrigerant.
4	Are air conditioning switch and fan control knob (Fan Switch) OK?	Go to Step 5	Replace
5	1. Turn the ignition switch “ON” (Engine is running). 2. Air conditioning switch and fan control knob (Fan Switch) “ON”. 3. Check to see if battery voltage is present at chassis side connector terminal No. E3-1. Is there a battery voltage?	Go to Step 6	Go to Step 7
6	Check to see if continuity between compressor side connector terminal No. E3-1 and the magnetic clutch side connector terminal. Is there a continuity?	Magnetic clutch defective.	Compressor defective.
7	Check to see if battery voltage is present at chassis side connector terminal No. C25-1 Is there a battery voltage?	Go to Step 8	Open circuit between No.C-20 (10A) fuse and No. C25-1.
8	1. Disconnect thermostat relay (X-5). 2. Check to see if battery voltage is present at the chassis side relay terminal NO. X5-2 Is there a battery voltage?	Go to Step 9	Open circuit between No. C25-2 and No.X5-2.
9	Check to see if voltage (approx. 10V) is present between chassis side relay terminal No. X5-1 and No. X5-3. Is there a battery voltage?	Go to Step 10	Go to Step 16
10	1. Reconnect thermostat relay and disconnect compressor relay (X-7). 2. Check to see if battery voltage is present at the chassis side relay terminal No. X7-2. Is there a battery voltage?	Go to Step 11	Open circuit between No. X5-4 and No. X7-2.
11	Check to see if continuity between chassis side relay terminal No. X7-4 and the chassis side connector terminal No. E3-1. Is there a continuity?	Go to Step 12	Open circuit.
12	Check to see if battery voltage is present between chassis side relay terminal No. X7-1 and No. X7-3. Is there a battery voltage?	Go to Step 13	Go to Step 14
13	Check to see if battery voltage is present at chassis side relay terminal No. X7-1. Is there a battery voltage?	Go to Step 15	Open circuit between No. C-20 (10A) fuse and No. X7-1.

Downloaded from www.Manualslib.com manuals search engine

Magnetic Clutch Does Not Run (Cont'd)

Step	Action	Yes	No
14	Check to see if battery voltage is present at chassis side connector terminal No. C1-B14. Is there a battery voltage?	Power train control module (PCM) defective. Refer to Driveability and Emissions in Engine section.	Open circuit between No. X7-3 and No. C1-B14.
15	Check to see if continuity between chassis side relay terminal No. X-54 and chassis side connector terminal No. C3-E15. Is there a continuity?	Power train control module (PCM) defective. Refer to Driveability and Emissions in Engine section.	Open circuit
16	Check to see if battery voltage is present at chassis side relay terminal No. X5-1. Is there a battery voltage?	Go to Step 17	Go to Step 20
17	1. Reconnect thermostat relay. 2. Check to see if battery voltage is present at chassis side connector terminal No. B4-3. Is there a battery voltage?	Go to Step 18	Open circuit between No.I23-6 and No.B4-3.
18	Check to see if battery voltage (appox 10V) is present at chassis side connector terminal No. B4-1. Is there a battery voltage?	Go to Step 19	Open circuit between No. X5-3 and No. B4-1.
19	Check to see if continuity between chassis side connector terminal No. B4-2 and No. I18-4. Is there a continuity?	Electronic thermostat defective.	Open circuit between No. B4-2 and No. I18-4 or poor ground (Fan Switch Ground Circuit).
20	Check to see if battery voltage is present at chassis side connector terminal No. I23-2. Is there a battery voltage?	Open circuit between X5-1 and No.I23-6.	Open circuit between No. C-20 (10A) fuse and No.I23-2.

Downloaded from www.Manualslib.com manuals search engine

Individual Inspection

Fan Control Knob (Fan Switch) And Air Conditioning (A/C) Switch

1. Check for continuity between the fan switch and the A/C switch side connector terminals.

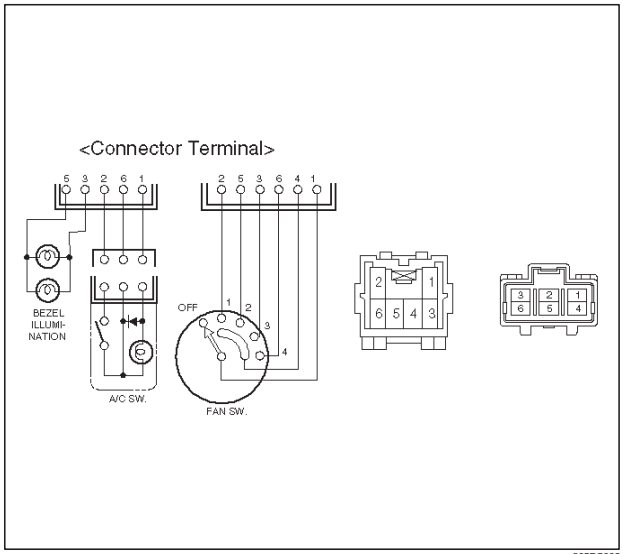

865RS002

Fan swtich position	Fan switch connector terminals with continuity
OFF	No continuity
1	1 – 2 – 4
2	1 – 4 – 5
3	1 – 3 – 4
4	1 – 4 – 6

A/C switch position	A/C switch connector terminals with continuity
OFF	1 – 6
ON	1 – 2 – 6

Heater And A/C (B-36), Thermostat (X-5) And Compressor (X-7) Relay

1. Disconnect relays and check for continuity and resistance between relay terminals.
   - For handling of these relays, refer to Heater &A/C Relay in this section.

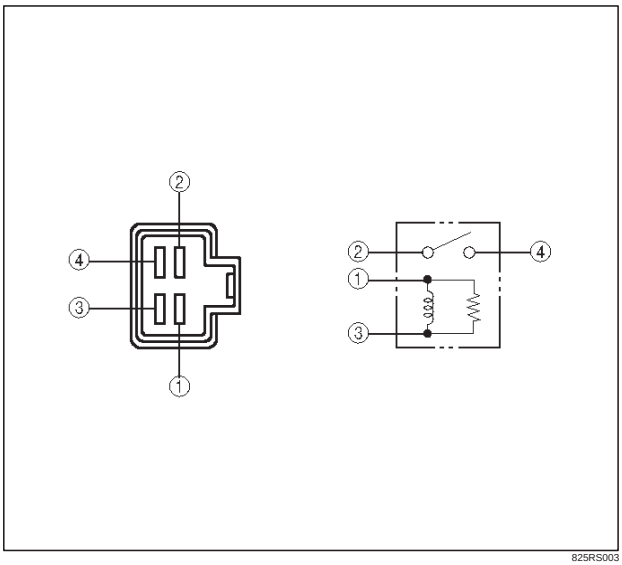

825RS003

Condition	Relay terminals with continuity
Normal	1 – 3 (Approx 85–105μ)
When battery voltage is applied between 1 – 3	2 – 4

Downloaded from www.Manualslib.com manuals search engine

Pressure Switch

1. Disconnect pressure switch connector and check for continuity between pressure switch side connector terminals (1) and (2).

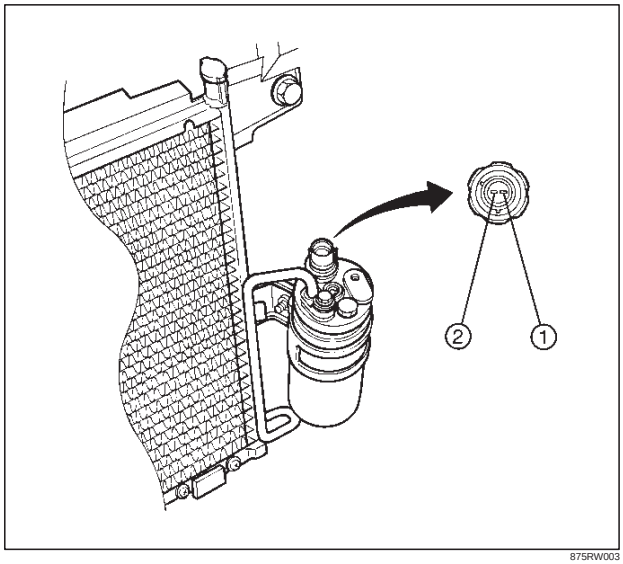

875RW003

General Repair Procedure

Precautions For Replacement or Repair of Air Conditioning Parts

There are certain procedures, practices and precautions that should be followed when servicing air conditioning systems:

- Keep your work area clean.
- Always wear safety goggles and protective gloves when working on refrigerant systems.
- Beware of the danger of carbon monoxide fumes caused by running the engine.
- Beware of discharged refrigerant in enclosed or improperly ventilated garages.
- Always disconnect the negative battery cable and discharge and recover the refrigerant whenever repairing the air conditioning system.
- When discharging and recovering the refrigerant, do not allow refrigerant to discharge too fast; it will draw compressor oil out of the system.
- Keep moisture and contaminants out of the system. When disconnecting or removing any lines or parts, use plugs or caps to close the fittings immediately.

  Never remove the caps or plugs until the lines or parts are reconnected or installed.
- When disconnecting or reconnecting the lines, use two wrenches to support the line fitting, to prevent from twisting or other damage.
- Always install new O-rings whenever a connection is disassembled.
- Before connecting any hoses or lines, apply new specified compressor oil to the O-rings.
- When removing and replacing any parts which require discharging the refrigerant circuit, the operations described in this section must be performed in the following sequence:

1. Use the J-39500 (ACR^4: HFC-134a Refrigerant Recovery / Recycling / Recharging / System) or equivalent to thoroughly discharge and recover the refrigerant.
2. Remove and replace the defective part.
3. After evacuation, charge the air conditioning system and check for leaks.

Repair Of Refrigerant Leaks

Refrigerant Line Connections

Install new O-rings, if required. When disconnecting or connecting lines, use two wrenches to prevent the connecting portion from twisting or becoming damaged.

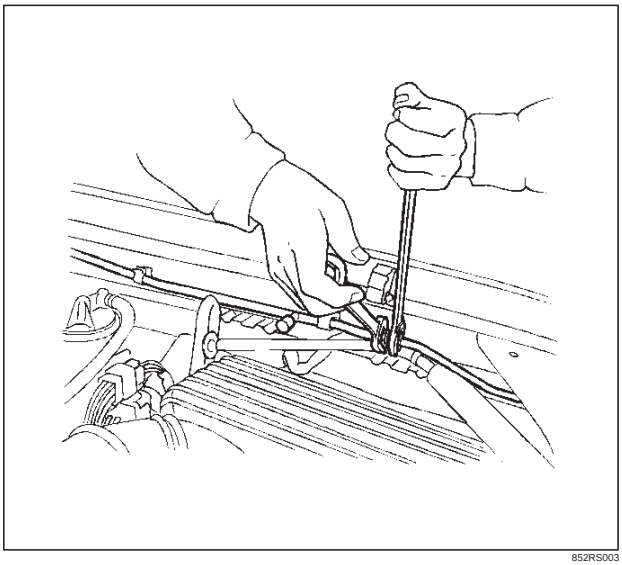

852RS003

When connecting the refrigerant line at a block joint, securely insert the projecting portion of the joint portion into the connecting hole on the unit side and secure with a bolt. Apply the specified compressor oil to the O-rings prior to connecting.

Downloaded from www.Manualslib.com manuals search engine

CAUTION: Compressor (PAG) oil to be used varies according to the compressor model. Be sure to apply oil specified for the model of compressor.

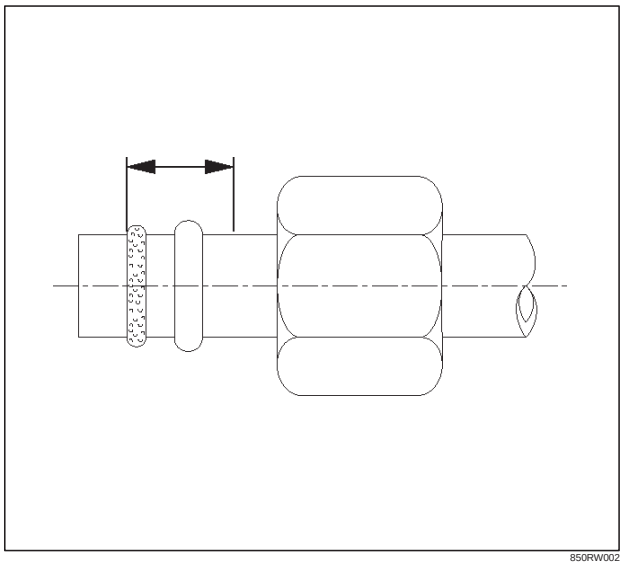

850RW002

O-rings (2) must be closely aligned with the raised portion (1) of refrigerant line.

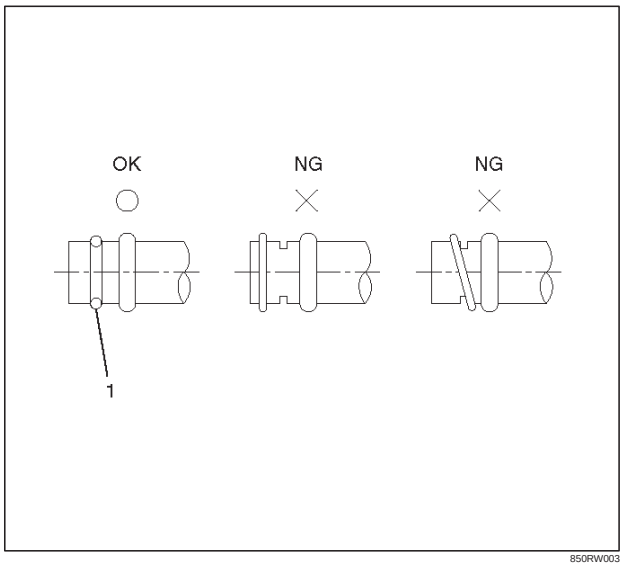

850RW003

Insert the nut into the union.
First, tighten the nut by hand as much as possible, then tighten the nut to the specified torque.

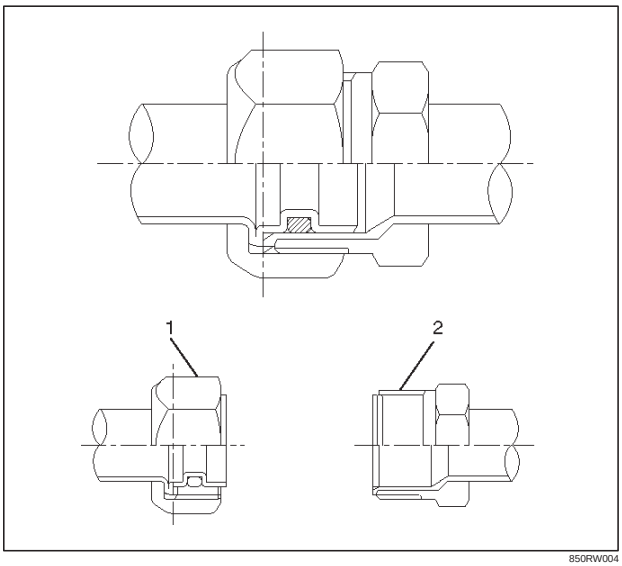

850RW004

Downloaded from www.Manualslib.com manuals search engine

Leak Check

Inspection of refrigerant leak

Refrigerant leak may cause an adverse effect not only on the performance and durability of each component of the air-conditioner, but also on the global atmosphere.

Therefore, it is most important to repair refrigerant leak when there is any leak found.

Inspection flow of refrigerant leak

Step	Action	Yes	No
1	1. Evacuate the refrigerant system. 2. Charge the refrigerant. Is there any refrigerant leak?	Repair refrigerant system	Go To Step 2
2	1. Operate the compressor for more than 5 minutes to raise the pressure on the high pressure side. Is there any refrigerant leak at high pressure components?	Repair refrigerant system	Compressor operation to be confirmed

Inspection steps

Check the components of the air conditioner to see if there occurs any refrigerant leak along the flow of refrigerant.

NOTE:

- To avoid an error in the detection of refrigerant leak, make sure there is no refrigerant vapor or cigarette smoke around the vehicle before conducting the inspection.
  Also, select a location where the refrigerant vapor will not be blown off by wind.
- Inspection should be conducted chiefly on the pipe connections and sections where a marked oil contamination is found.
  When refrigerant is leaking, oil inside is also leaking at the same time.
- It is not possible to visually check the leak from inside the cooling unit. Follow the method below when checking.
  Remove the drain hose or resistor of the cooling unit, and insert a leak detector to see if there occurs any leak.

High pressure side

1. Discharger section of compressor
2. Inlet/outlet section of condenser
3. Inlet/outlet section of receiver driver
4. Inlet section of cooling unit

Low pressure side

1. Outlet section of cooling unit
2. Intake section of compressor

Major checking points of refrigerant leak

Compressor

- Pipe connection
- Sealing section of shaft
- Mating section of cylinder

Condenser

- Pipe connection
- Welds of condenser body

Receiver drier

- Pipe connection
- Attaching section of pressure switch
- Section around the sight glass

Evaporator unit (cooling unit)

- Pipe connection
- Connections of expansion valve
- Brazed sections of evaporator

NOTE:

- The evaporator and expansion valve are contained in the case. Remove the drain hose or the resistor of the cooling unit and insert a leak detector when checking for any leak.

Flexible hose

- Pipe connection
- Caulking section of the hose
- Hose (cracks, pinholes, flaws)

Pipe

- Pipe connection
- Pipe (cracks, flaws)

Charge Valve

NOTE:

- The charge valve, which is used to connect the gauge manifold, is normally provided with a resin cap. When the valve inside gets deteriorated, refrigerant will leak out.

Leak at Refrigerant Line Connections

1. Check the torque on the refrigerant line fitting and, if too loose, tighten to the specified torque.
   - Use two wrenches to prevent twisting and damage to the line.
   - Do not over tighten.
2. Perform a leak test on the refrigerant line fitting.

Downloaded from www.Manualslib.com manuals search engine

3. If the leak is still present, discharge and recover the refrigerant from the system.
4. Replace the O-rings.
   - O-rings cannot be reused. Always replace with new ones.
   - Be sure to apply the specified compressor oil to the new O-rings.
5. Retighten the refrigerant line fitting to the specified torque.
   - Use two wrenches to prevent twisting and damage to the line.
6. Evacuate, charge and retest the system.

Leaks In The Hose

If the compressor inlet or outlet hose is leaking, the entire hose must be replaced. The refrigerant hose must not be cut or spliced for repair.

1. Locate the leak.
2. Discharge and recover the refrigerant.
3. Remove the hose assembly.
   - Cap the open connections at once.
4. Connect the new hose assembly.
   - Use two wrenches to prevent twisting or damage to the hose fitting.
   - Tighten the hose fitting to the specified torque.
5. Evacuate, charge and test the system.

Compressor Leaks

If leaks are located around the compressor shaft seal or shell, replace or repair the compressor.

Recovery, Recycling, Evacuation and Charging of HFC-134a

Air conditioning systems contain HFC-134a. This is a chemical mixture which requires special handling procedures to avoid personal injury.

- Always wear safety goggles and protective gloves.
- Always work in a well-ventilated area. Do not weld or steam clean on or near any vehicle-installed air conditioning lines or components.
- If HFC-134a should come in contact with any part of the body, flush the exposed area with cold water and immediately seek medical help.
- If it is necessary to transport or carry any container of HFC-134a in a vehicle, do not carry it in the passenger compartment.
- If it is necessary to fill a small HFC-134a container from a large one,never fill the container completely. Space should always be allowed above the liquid for expansion.
- HFC-134a and R-12 should never be mixed as their compositions are not the same.
- HFC-134a PAG oil tends to absorb moisture more quickly than R-12 mineral oil and, therefore, should be handled more carefully.
- Keep HFC-134a containers stored below 40˚C (100˚F).

WARNING:

- **SHOULD HFC-134A CONTACT YOUR EYE(S), CONSULT A DOCTOR IMMEDIATELY.**
- **DO NOT RUB THE AFFECTED EYE(S). INSTEAD, SPLASH QUANTITIES OF FRESH COLD WATER OVER THE AFFECTED AREA TO GRADUALLY RAISE THE TEMPERATURE OF THE REFRIGERANT ABOVE THE FREEZING POINT.**
- **OBTAIN PROPER MEDICAL TREATMENT AS SOON AS POSSIBLE. SHOULD THE HFC-134A TOUCH THE SKIN, THE INJURY MUST BE TREATED THE SAME AS SKIN WHICH HAS BEEN FROSTBITTEN OR FROZEN.**

Refrigerant Recovery

The refrigerant must be discharged and recovered by using the J-39500 (ACR^4:HFC-134a Refrigerant Recovery/Recycling/Recharging/System) or equivalent before removing or mounting air conditioning parts.

1. Connect the high and low charging hoses of the ACR^4(or equivalent) as shown below.

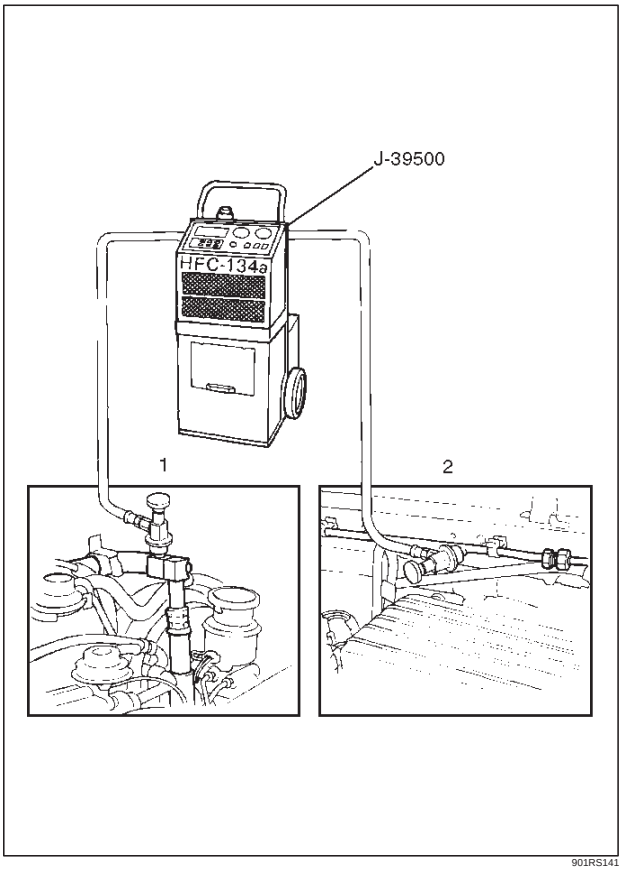

Legend

(1) Low Side
(2) High Side

2. Recover the refrigerant by following the Manufacturer's Instructions.
3. When a part is removed, put a cap or a plug on the connecting portion so that dust, dirt or moisture cannot get into it.

Downloaded from www.Manualslib.com manuals search engine

Refrigerant Recycling

Recycle the refrigerant recovered by J-39500 (ACR4:HFC-134a Refrigerant Recovery / Recycling / Recharging / System) or equivalent.
For the details of the actual operation, follow the steps in the ACR4(or equivalent) Manufacturer's Instructions.

Evacuation of The Refrigerant System

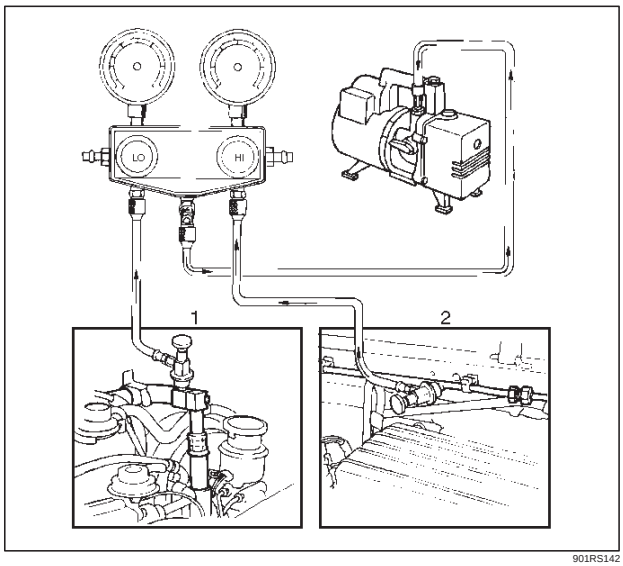

901RS142

Legend
(1) Low Side
(2) High Side

NOTE: Explained below is a method using a vacuum pump. Refer to the ACR4(or equivalent) manufacturer's instructions when evacuating the system with a ACR4(or equivalent).

Air and moisture in the refrigerant will cause problems in the air conditioning system. Therefore, before charging the refrigerant, be sure to evacuate air and moisture thoroughly from the system.

1. Connect the gauge manifold.
   - High-pressure valve (HI) — Discharge-side.
   - Low-pressure valve (LOW) — Suction-side.
2. Discharge and recover the refrigerant.
3. Connect the center hose of the gauge manifold set to the vacuum pump inlet.
4. Operate the vacuum pump, open shutoff valve and then open both hand valves.
5. When the low-pressure gauge indicates approximately 750 mmHg (30 inHg), continue the evacuation for 5 minutes or more.
6. Close both hand valves and stop the vacuum pump.
7. Check to ensure that the pressure does not change after 10 minutes or more.
   - If the pressure changes, check the system for leaks.
   - If leaks occur, retighten the refrigerant line connections and repeat the evacuation steps.
8. If no leaks are found, again operate the vacuum pump for 20 minutes or more. After confirming that the gauge manifold pressure is at 750 mmHg (30 inHg), close both hand valves.
9. Close positive shutoff valve. Stop the vacuum pump and disconnect the center hose from the vacuum pump.

Charging The Refrigerant System

There are various methods of charging refrigerant into the air conditioning system.
These include using J-39500 (ACR4:HFC-134a Refrigerant Recovery/Recycling/Recharging/System) or equivalent and direct charging with a weight scale charging station.

Charging Procedure

- **ACR4(or equivalent) Method**
  For the charging of refrigerant recovered by ACR4(or equivalent), follow the manufacturer's instruction.

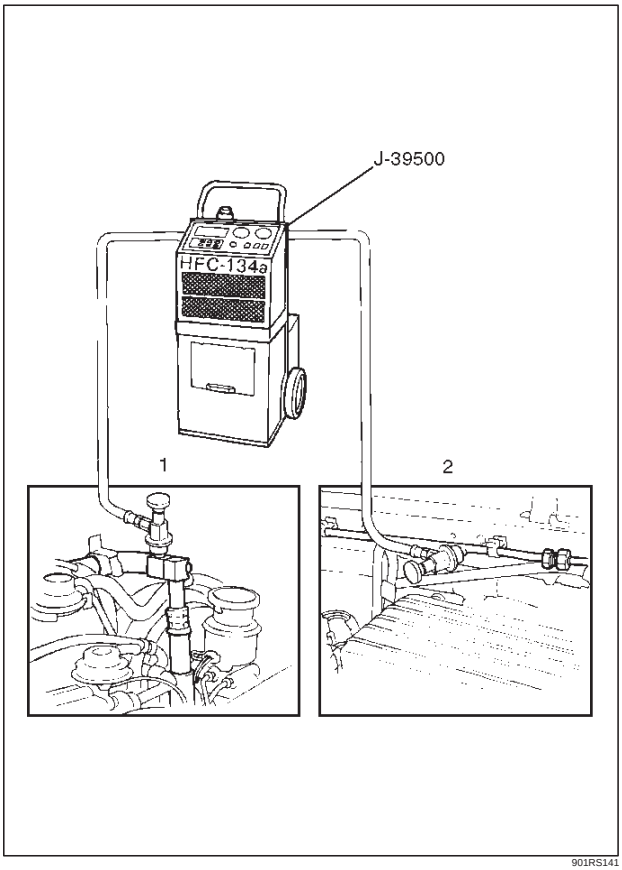

901RS141

Legend
(1) Low Side
(2) High Side

- **Direct charging with a weight scale charging station method**

1. Make sure the evacuation process is correctly completed.
2. Connect the center hose of the manifold gauge to the weight scale.

Downloaded from www.Manualslib.com manuals search engine

3. Connect the low pressure charging hose of the manifold gauge to the low pressure side service valve of the vehicle.
4. Connect the high pressure charging hose of the manifold gauge to the high pressure side service valve of the vehicle.

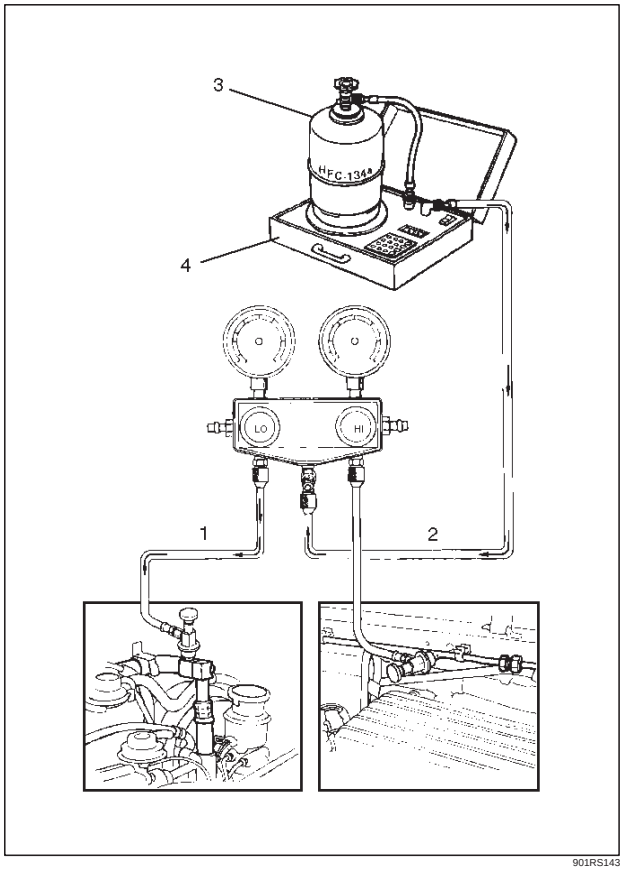

901RS143

Legend

(1) Low Side
(2) High Side
(3) Refrigerant Container
(4) Weight Scale

5. Place the refrigerant container(3) up right on a weight scale(4).
   Note the total weight before charging the refrigerant.
   a. Open the refrigerant container valve.
   b. Open the low side vale on the manifold gauge set. Refer to the manufacturer's instructions for a weight scale charging station.

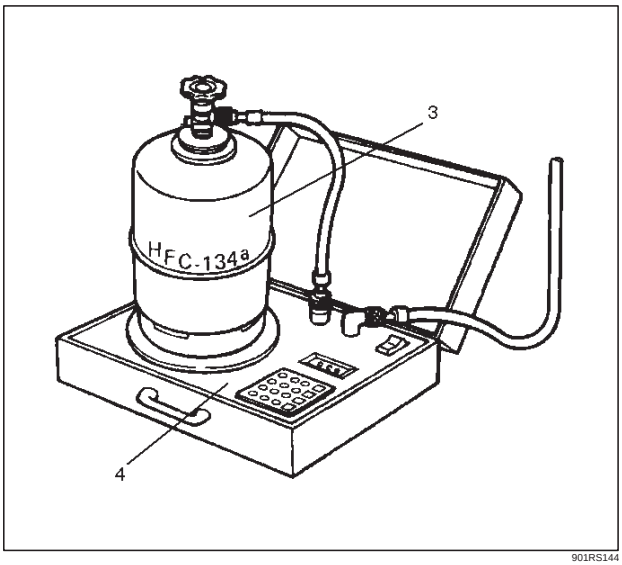

901RS144

6. Perform a system leak test:
   - Charge the system with approximately 200 g (0.44 lbs) of HFC-134a.
   - Make sure the high pressure valve of the manifold gauge is closed.
   - Check to ensure that the degree of pressure does not change.
   - Check for refrigerant leaks by using a HFC-134a leak detector.
   - If a leak occurs, recover the refrigerant. Repair the leak and start all over again from the first step of evacuation.
7. If no leaks are found, continue charging refrigerant to the air conditioning system.
   - Charge the refrigerant until the scale reading decreases by the amount of the charge specified.

   Specified amount: 600 g (1.32 lbs)

   - If charging the system becomes difficult:

1. Run the engine at idle and close all the vehicle doors.
2. Turn A/C switch "ON".
3. Set the fan switch to its highest position.
4. Set the air source selector lever to "CIRC".
5. Slowly open the low side valve on the manifold gauge set.

WARNING: BE ABSOLUTELY SURE NOT TO OPEN THE HIGH PRESSURE VALVE OF THE MANIFOLD GAUGE. SHOULD THE HIGH PRESSURE VALVE BE OPENED, THE HIGH PRESSURE REFRIGERANT WOULD FLOW BACKWARD, AND THIS MAY CAUSE THE REFRIGERANT CONTAINER TO BURST.

8. When finished with the refrigerant charging, close the low pressure valve of the manifold gauge and container valve.
9. Check for refrigerant leaks.

Downloaded from www.Manualslib.com manuals search engine

Checking The A/C System

1. Run the engine and close all the vehicle doors.
2. Turn A/C switch “ON”, set the fan switch to its highest position.
3. Set the air source lever to “CIRC”, set the temperature lever to the full cool position.
4. Check the high and low pressure of the manifold gauge.
   - Immediately after charging refrigerant, both high and low pressures might be slightly high, but they settle down to the pressure guidelines shown below:
   - The ambient temperature should be between 25–30˚C (77–86˚F).
   - The pressure guideline for the high-pressure side is approximately 1372.9–1863.3 kPa (199.1–270.2 psi).
   - The pressure guideline for the low-pressure side is approximately 147.1–294.2 kPa (21.3–42.7 psi).
   - If an abnormal pressure is found, refer to Checking The Refrigerant System With Manifold Gauge in this section.
5. Put your hand in front of the air outlet and move the temperature control lever of the control panel to different positions. Check if the outlet temperature changes as selected by the control knob.

Downloaded from www.Manualslib.com manuals search engine

Compressor Assembly

Compressor Assembly and Associated Parts

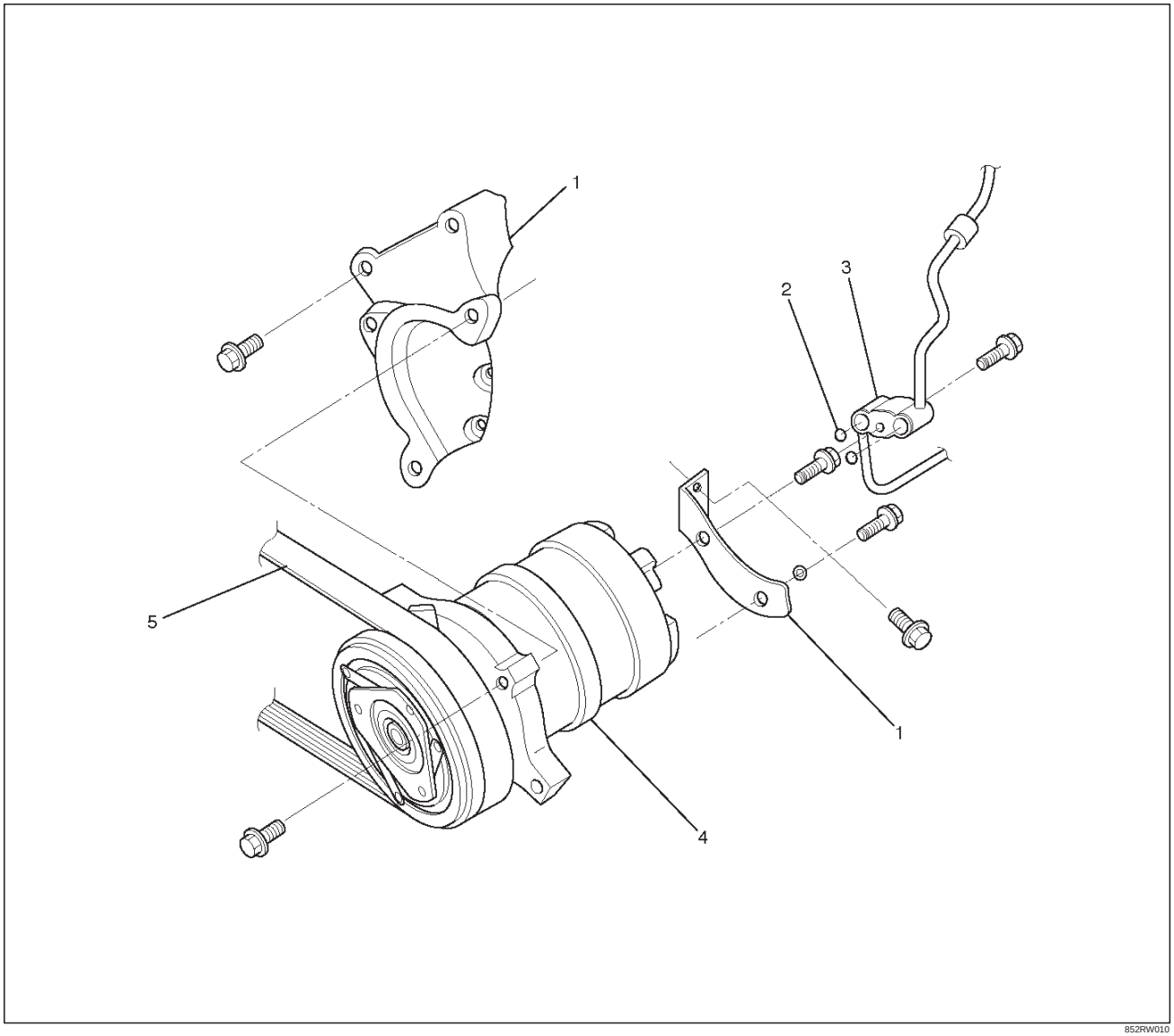

Legend

(1) Compressor Bracket
(2) Seal Washer
(3) Refrigerant Line Connector
(4) Compressor
(5) Drive Belt

Removal

1. Disconnect the battery ground cable.
2. Discharge and recover refrigerant
   - Refer to Refrigerant Recovery in this section.
3. Disconnect magnetic clutch harness connector.

Downloaded from www.Manualslib.com manuals search engine

4. Remove drive belt.
   - Move drive belt tensioner to loose side using wrench then remove drive belt.

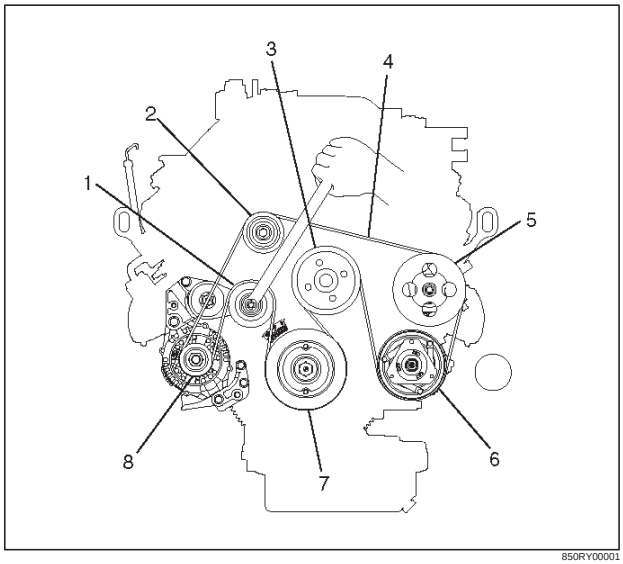

Legend

(1) Auto Tensioner
(2) Idle Pulley
(3) Cooling Fan Pulley
(4) Drive Belt
(5) Power Steering Oil Pump
(6) Air Conditioner Compressor
(7) Crankshaft Pulley
(8) Generator

5. Disconnect refrigerant line connector.
   - When removing the line connector, the connecting part should immediately be plugged or capped to prevent foreign matter from being mixed into the line.
6. Remove compressor.

Installation

1. Install compressor.
   - Tighten the compressor fixing bolts to the specified torque.

   Torque: 19 N•m (14 lb•ft)
2. Connect refrigerant line connector.
   - Tighten the refrigerant line connector fixing bolts to the specified torque.

   Torque: 15 N•m (11 lb•ft)
   - O-rings cannot be reused. Always replace with new ones.
   - Be sure to apply new compressor oil to the O-rings when connecting refrigerant lines.
3. Install drive belt.
   - Move serpentine belt tensioner to loose side using wrench, then install serpentine belt to normal position.
4. Connect magnetic clutch harness connector.

Downloaded from www.Manualslib.com manuals search engine

Condenser Assembly

Condenser Assembly and Associated Parts

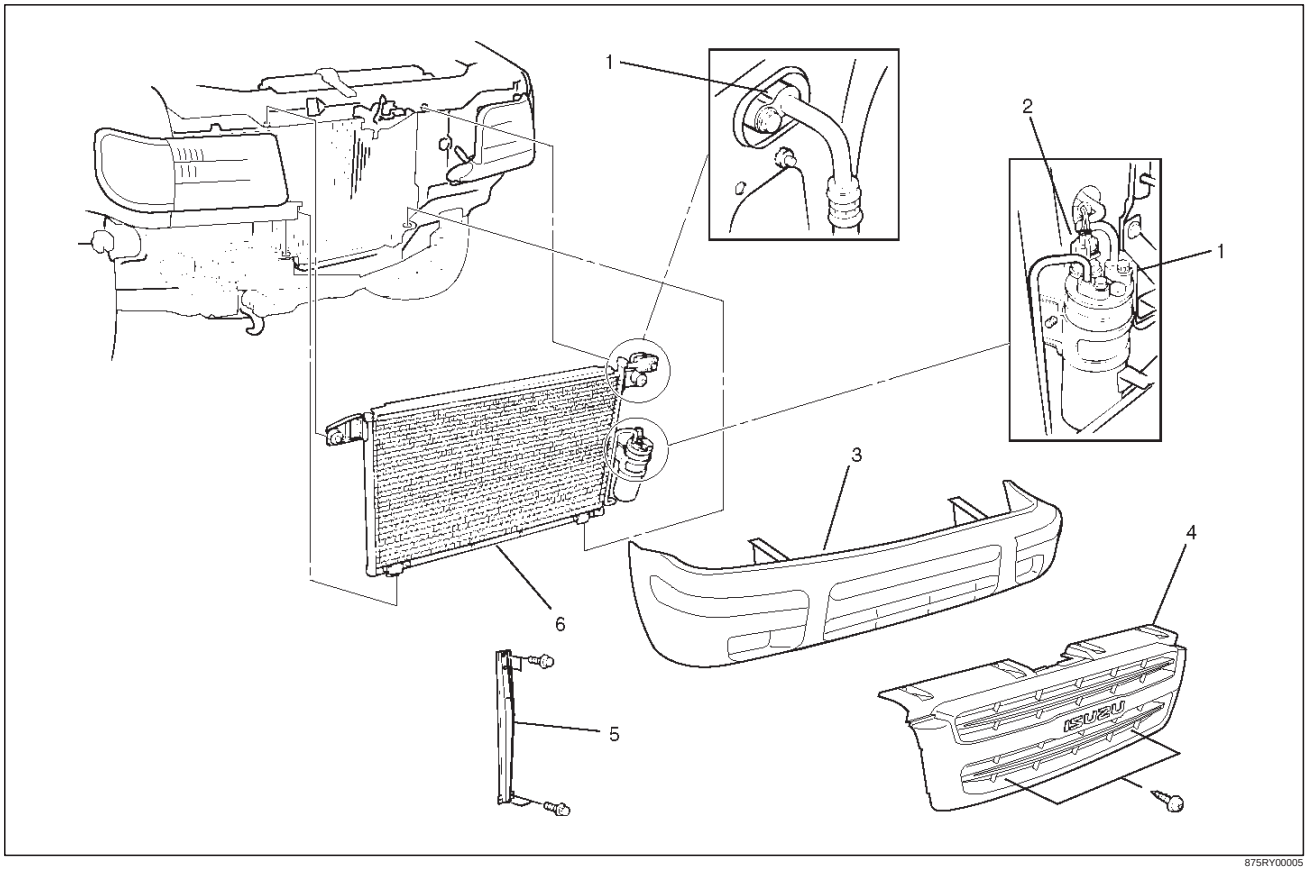

875RY00005

Legend

(1) Refrigerant Line
(2) Pressure Switch Connector
(3) Front Bumper Assembly
(4) Radiator Grille
(5) Engine Hood Front End Stay
(6) Condenser Assembly

Removal

1. Disconnect the battery ground cable.
2. Discharge and recover refrigerant.
   - Refer to Refrigerant Recovery in this section.
3. Remove radiator grille.
4. Remove front bumper assembly.
   - Refer to Bumpers in Body and Accessories section.
5. Remove engine hood front end stay.
6. Disconnect pressure switch connector.
7. Disconnect refrigerant line.
   - When removing the line connector, the connecting part should immediately be plugged or capped to prevent foreign matter from being mixed into the line.
8. Remove condenser assembly.
   - Handle with care to prevent damaging the condenser or radiator fin.

Installation

1. Install condenser assembly.
   - If installing a new condenser, be sure to add 30cc (1.0 fl. oz.) of new compressor oil to a new one.
   - Tighten the condenser fixing bolts to the specified torque.

   Torque: 6 N•m (52 lb•in)
2. Connect refrigerant line.
   - Tighten the inlet line connector fixing bolt to the specified torque.

   Torque: 15 N•m (11 lb•ft)
   - Tighten the outlet line connector fixing bolt to the specified torque.

   Torque: 6 N•m (52 lb•in)
   - O-rings cannot be reused. Always replace with new ones.

Downloaded from www.Manualslib.com manuals search engine

- Be sure to apply new compressor oil to the O-rings when connecting the refrigerant line.

3. Connect pressure switch connector.
4. Install engine hood front end stay.
5. Install front bumper assembly.
6. Install radiator grille.

Receiver / Drier

Receiver / Drier and Associated Parts

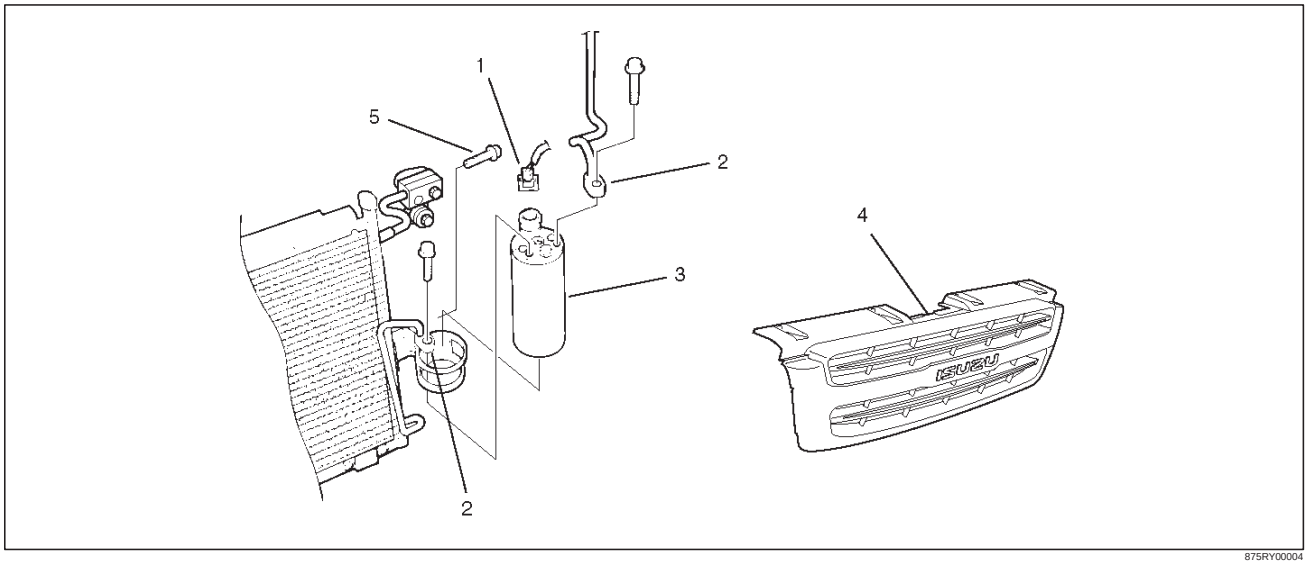

875RY00004

Legend

(1) Pressure Switch Connector
(2) Refrigerant Line
(3) Receiver / Drier
(4) Radiator Grille
(5) Bracket Bolt

Removal

1. Disconnect the battery ground cable.
2. Discharge and recover refrigerant.
   - Refer to Refrigerant Recovery in this section.
3. Remove radiator grille.
4. Disconnect pressure switch connector.
5. Disconnect refrigerant line.
   - When removing the line connected part, the connecting part should immediately be plugged or capped to prevent foreign matter from being mixed into the line.
6. Remove bracket bolt.
7. Remove receiver/drier.
   - Loosen the bolt, then, using care not to touch or bend the refrigerant line, carefully pull out the receiver/drier.

Installation

To install, follow the removal steps in the reverse order, noting the following points:

1. If installing a new receiver/drier, be sure to add 30cc (1.0 fl. oz.) of new compressor oil to a new one.
2. Put the receiver/drier in the bracket and connect with the refrigerant line. Check that no excessive force is imposed on the line. Fasten the bracket bolt to the receiver/drier.
3. Tighten the refrigerant line to the specified torque.

   Torque: 6 N•m (52 lb•in)
4. O-rings cannot be reused. Always replace with new ones.
5. Be sure to apply new compressor oil to the O-rings when connecting the refrigerant line.

Downloaded from www.Manualslib.com manuals search engine

Pressure Switch

Pressure Switch and Associated Parts

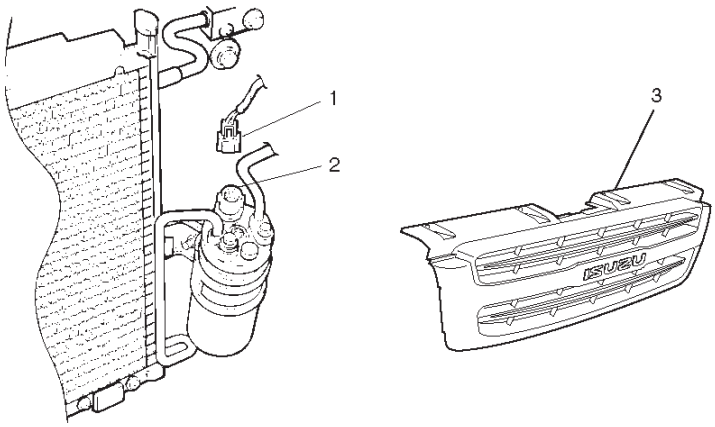

875RY00006

Legend

(1) Pressure Switch Connector
(2) Pressure Switch
(3) Radiator Grille

Removal

1. Disconnect the battery ground cable.
2. Discharge and recover refrigerant.
   - Refer to “Refrigerant Recovery in this section.
3. Remove radiator grille.
4. Disconnect pressure switch connector.
5. Disconnect pressure switch.
   - When removing the switch connected part, the connecting part should immediately be plugged or capped to prevent foreign matter from being mixed into the line.

Installation

To install, follow the removal steps in the reverse order, noting the following point:

1. O-ring cannot be reused. Always replace with a new one.
2. Be sure to apply new compressor oil to the O-ring when connecting pressure switch.
3. Tighten the pressure switch to the specified torque.

   Torque: 13 N•m (113 lb•in)

Downloaded from www.Manualslib.com manuals search engine

Evaporator Assembly

Evaporator Assembly and Associated Parts

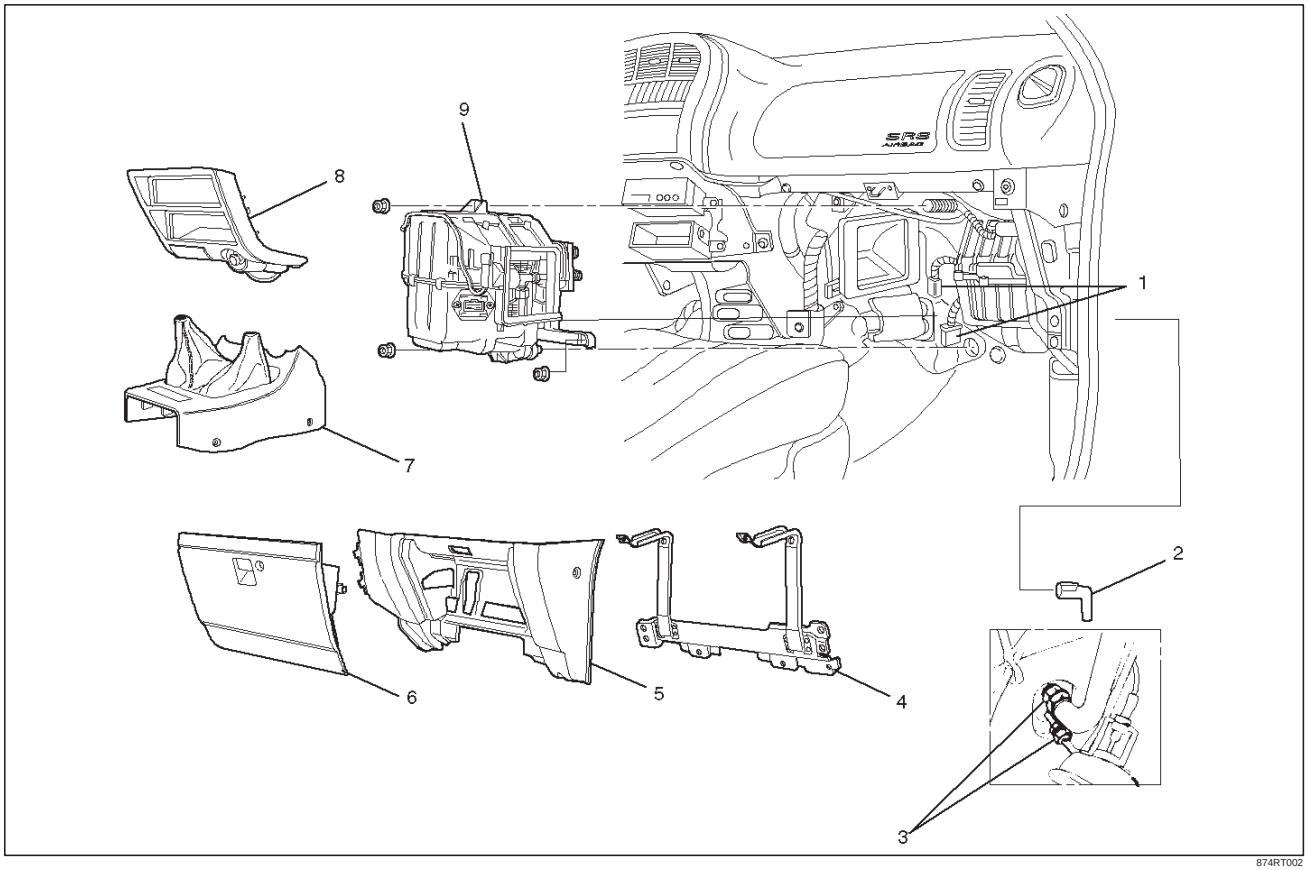

874RT002

Legend

(1) Resistor and Electronic Thermostat Connector
(2) Drain Hose
(3) Refrigerant Line
(4) Passenger Knee Bolster Reinforcement Assembly
(5) Instrument Panel Passenger Lower Cover Assembly
(6) Glove Box
(7) Front Console Assembly
(8) Lower Cluster Assembly
(9) Evaporator Assembly

Removal

1. Disconnect the battery ground cable.
2. Discharge and recover refrigerant.
   - Refer to Refrigerant Recovery in this section.
3. Remove front console assembly.
4. Remove lower cluster assembly.
5. Remove glove box.
6. Remove instrument panel passenger lower cover assembly.
7. Remove passenger knee bolster reinforcement assembly.
   - Refer to Instrument Panel Assembly in Body and Accessories section.
8. Disconnect resistor (2) and electronic thermostat connector (1).

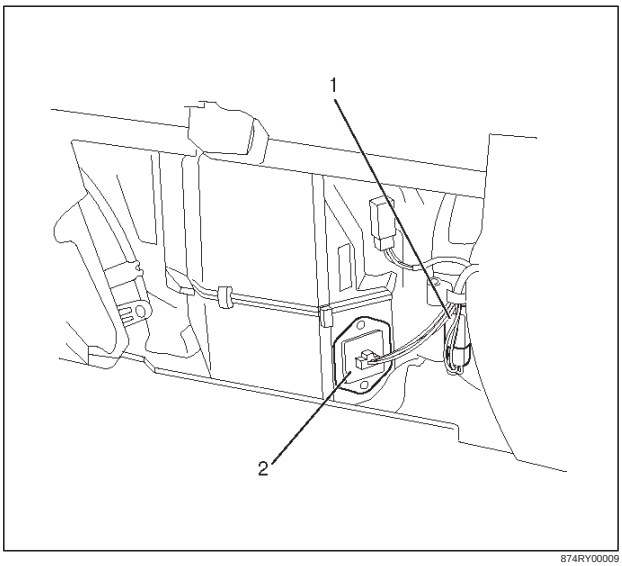

874RY00009

Downloaded from www.Manualslib.com manuals search engine

9. Disconnect drain hose.
10. Disconnect refrigerant line.
    - Use a back-up wrench when disconnecting and reconnecting the refrigerant lines.
    - When removing the refrigerant line connected part, the connecting part should immediately be plugged or capped to prevent foreign matter from being mixed into the line.
11. Remove evaporator assembly.

Installation

To install, follow the removal steps in the reverse order, noting the following points:

1. To install a new evaporator assembly, add 50cc (1.7 fl. oz.) of new compressor oil to the new core.
2. Tighten the refrigerant outlet line to the specified torque.

   Torque: 25 N•m (18 lb•ft)
3. Tighten the refrigerant inlet line to the specified torque.

   Torque: 15 N•m (11 lb•ft)
4. O-rings cannot be reused. Always replace with new ones.
5. Be sure to apply new compressor oil to the O-rings when connecting lines.

Electronic Thermostat, Evaporator Core and/or Expansion Valve

Disassembled View

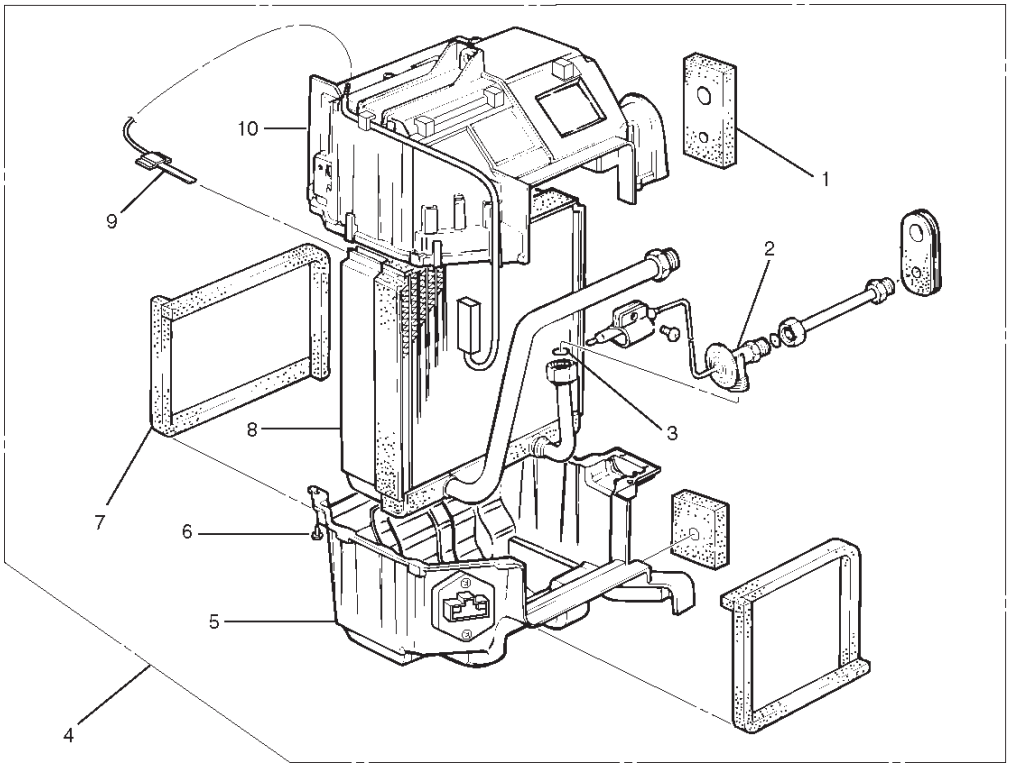

874RX017

Legend

(1) Lining
(2) Expansion Valve
(3) O-ring
(4) Evaporator Assembly
(5) Lower Case
(6) Attaching Screw
(7) Lining
(8) Evaporator Core
(9) Electronic Thermostat
(10) Upper Case

Removal

1. Disconnect the battery ground cable.
2. Discharge and recover refrigerant.
   - Refer to Refrigerant Recovery in this section.

Downloaded from www.Manualslib.com manuals search engine

3. Remove evaporator assembly.
   - Refer to Evaporator Assembly in this section.
4. Remove the electronic thermostat sensor fixing clip. Pull the sensor from the evaporator assembly.
5. Remove clip.
6. Remove attaching screw.
7. Remove upper case.
8. Remove lower case.
   - Slit the case parting face with a knife since the lining is separated when removing the evaporator.

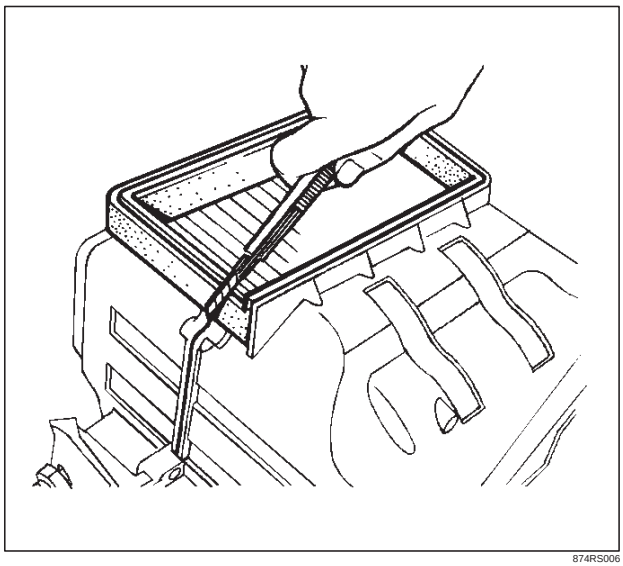

874RS006

- Lift to remove the upper case.

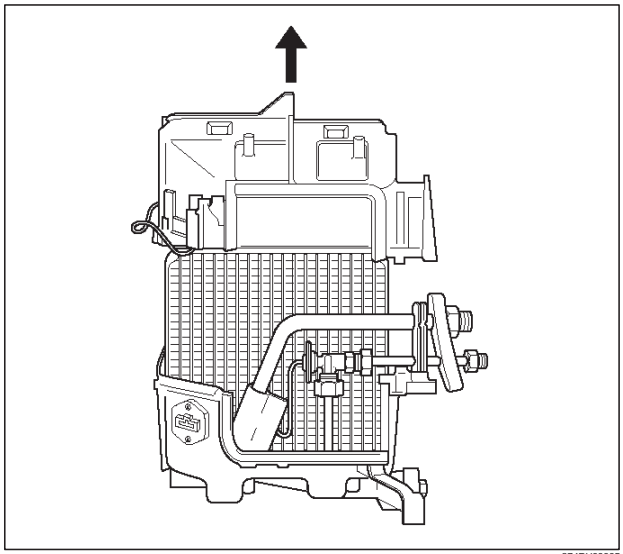

874RY00005

9. Remove evaporator core.

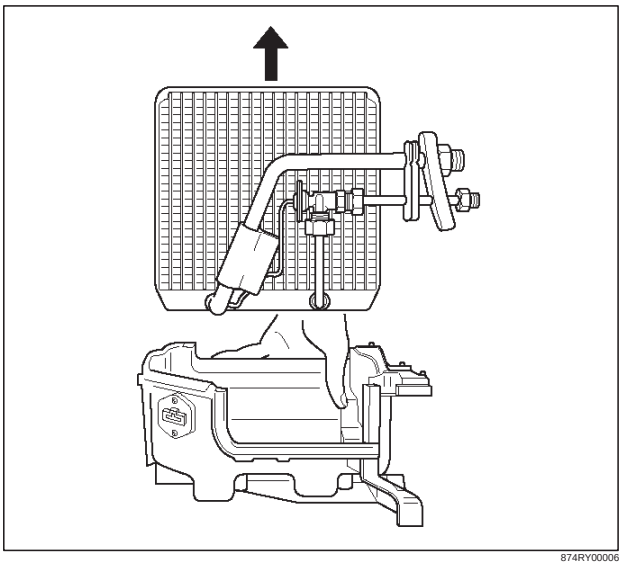

874RY00006

10. Remove expansion valve.
    - Tear off the insulator carefully.
    - Remove the sensor fixing clip.
    - Use a back-up wrench when disconnecting all refrigerant pipes.

Installation

To install, follow the removal steps in the reverse order, noting the following points:

1. The sensor is installed on the core with the clip.
2. The sensor must not interfere with the evaporator core.
3. When installing the new evaporator core, install the thermo sensor (2) to the evaporator core (1) specified position with the clip in the illustration.

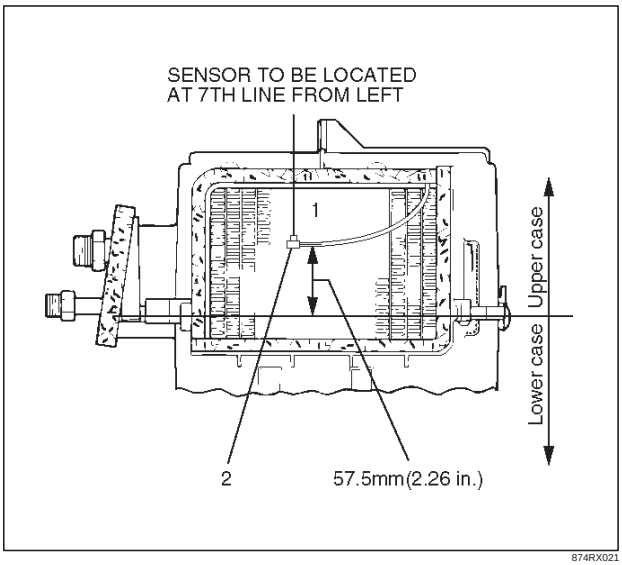

874RX021

4. O-rings cannot be reused. Always replace with new ones.
5. Be sure to apply new compressor oil to the O-rings when connecting lines.

Downloaded from www.Manualslib.com manuals search engine

6. Be sure to install the sensor and the insulator on the place where they were before.
7. To install a new evaporator core, add 50cc (1.7 fl. oz.) of new compressor oil to the new core.
8. Tighten the refrigerant lines to the specified torque. Refer to Main Data and Specifications for Torque Specifications in this section.
9. Apply an adhesive to the parting face of the lining when assembling the evaporator assembly.

Air Conditioning Switch and Illumination Bulb

Air Conditioning Switch, Illumination Bulb and Associated Parts

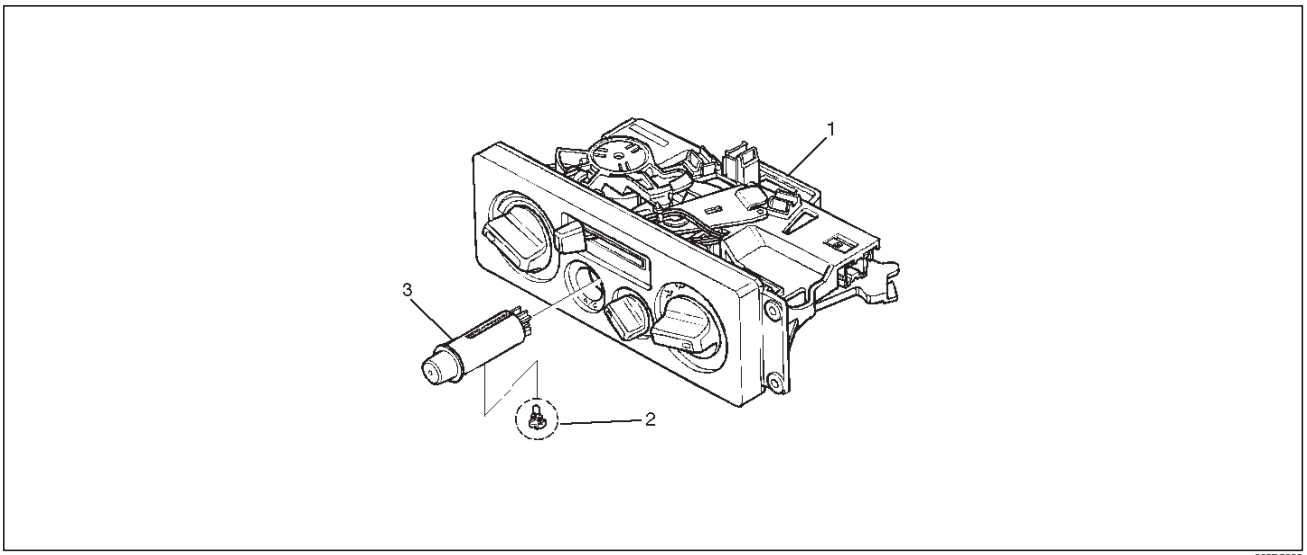

865RS003

Legend
(1) Control Lever Assembly
(2) Illumination Bulb
(3) A/C Switch

Removal

1. Disconnect the battery ground cable.
2. Remove control lever assembly.
   - Refer to Control Lever Assembly in this section.
3. Lift up the catch portion (1) of the switch and remove the air conditioning switch (2) while pushing it toward the outside.

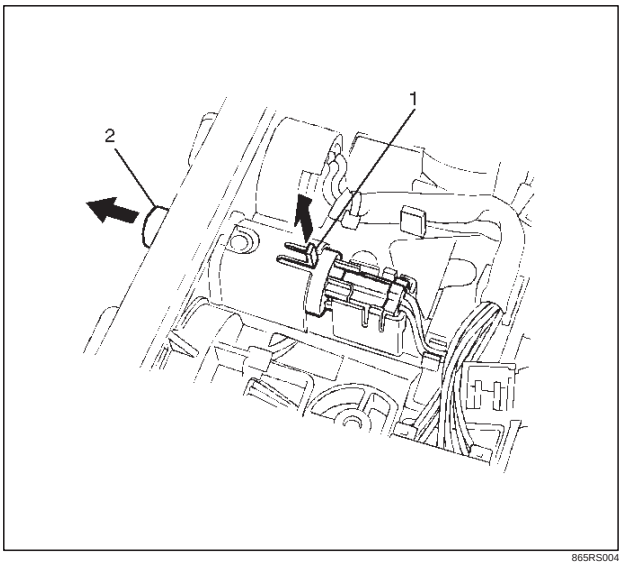

865RS004

4. Turn the illumination bulb counterclockwise to remove.

Installation

To install, follow the removal steps in the reverse order.

Downloaded from www.Manualslib.com manuals search engine

Refrigerant Line

Refrigerant Line and Associated Parts

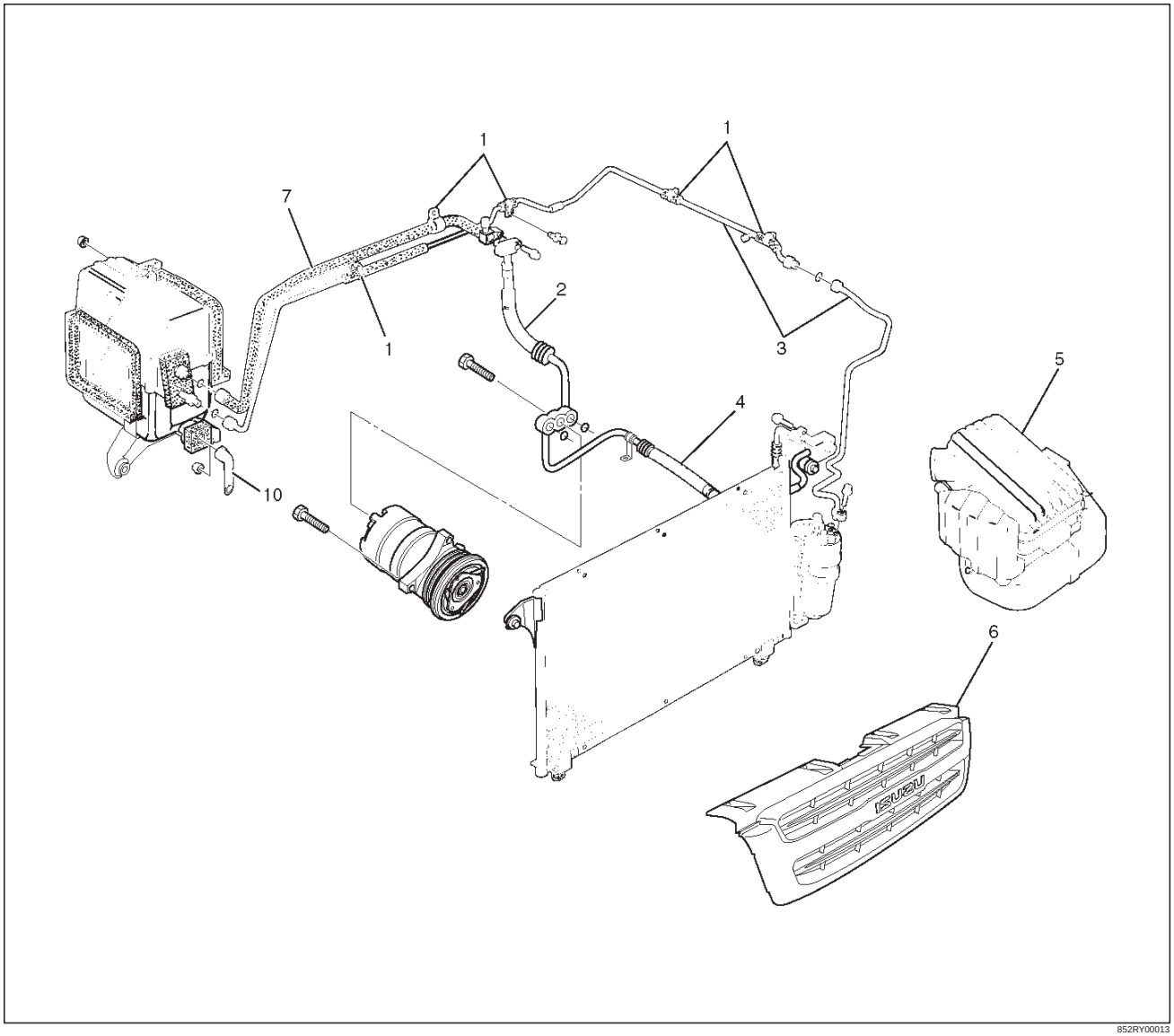

852RY00013

Legend

(1) Clip and Clamp
(2) Suction Line (Low Pressure Hose)
(3) Liquid Line (High-Pressure Pipe)
(4) Discharge Line (High Pressure Hose)
(5) Air Cleaner
(6) Radiator Grille
(7) Suction Line (Low-Pressure Pipe)

Removal

1. Disconnect the battery ground cable.
2. Discharge and recover refrigerant.
   - Refer to Refrigerant Recovery in this section.
3. Remove radiator grille.
4. Remove air cleaner.
5. Remove clip and clamp.
6. Disconnect liquid line (High-pressure pipe).
7. Disconnect suction line (Low-pressure pipe) using a back-up wrench.
8. Disconnect suction line (Low-pressure hose) using a back-up wrench.
9. Disconnect discharge line (High-pressure hose) using a back-up wrench.
   - Use a backup wrench when disconnecting and reconnecting the refrigerant lines.

Downloaded from www.Manualslib.com manuals search engine

- When removing the refrigerant line connecting part, the connecting part should immediately be plugged or capped to prevent foreign matter from being mixed into the line.

Installation

To install, follow the removal steps in the reverse order, noting the following points:

1. O-rings cannot be reused. Always replace with new ones.
2. Be sure to apply new compressor oil to the O-rings when connecting lines.
3. Tighten the refrigerant line to the specified torque.
   Refer to Main Data and Specifications for Torque Specifications in this section.

Downloaded from www.Manualslib.com manuals search engine

Main Data And Specifications

General Specifications

HEATER UNIT	
Temperature control	Reheat air mix system
Capacity	4.3 kw (3,700 Kcal./hr.)
Air flow	280 m^3/hr
HEATER CORE	
Type	Plate and corrugate fin type
Element dimension	171 mm (6.7 in.) × 161 mm (6.3 in.) × 25 mm (0.98 in.)
Radiating area	Approx. 0.75 m^2
EVAPORATOR ASSEMBLY	
Capacity	4.9 kw (4,200 Kcal./hr.)
Air flow	470 m^3/hr
EVAPORATOR CORE	
Type	Al-laminate louver fin type
Element dimension	235 mm (9.3 in.) × 225.3 mm (8.9 in.) × 60 mm (2.4 in.)
EXPANSION VALVE	
Type	Internal pressure equalizer type
THERMOSTAT SWITCH	
Type	Electronic thermostat OFF: Below 3.5 ± 0.5 ˚C (38.3 ± 0.9 ˚F) ON: Above 5.0 ± 0.5 ˚C (41.0 ± 0.9 ˚F)
CONDENSER	
Type	Parallel flow
Radiation performance	15.9 kw (13,700 Kcal./hr.)
RECEIVER/DRIER	
Type	Assembly includes sight glass with dual pressure switch
Internal volume	300 cc (10 fl.oz.)
PRESSURE SWITCH	
Type	Dual pressure switch
	Low pressure control ON: 186.3±29.4 kPa (27.0±4.3 psi) OFF: 176.5±19.6 kPa (25.6±2.8 psi)
	High pressure control DIFF: 2353.6±196.1 kPa (341.3±28.4 psi) OFF: 2942.0±196.1 kPa (426.6±28.4 psi)
REFRIGERANT	
Type	HFC-134a
Specified amount	600 g (1.32 lbs.)

Downloaded from www.Manualslib.com manuals search engine

Torque Specifications

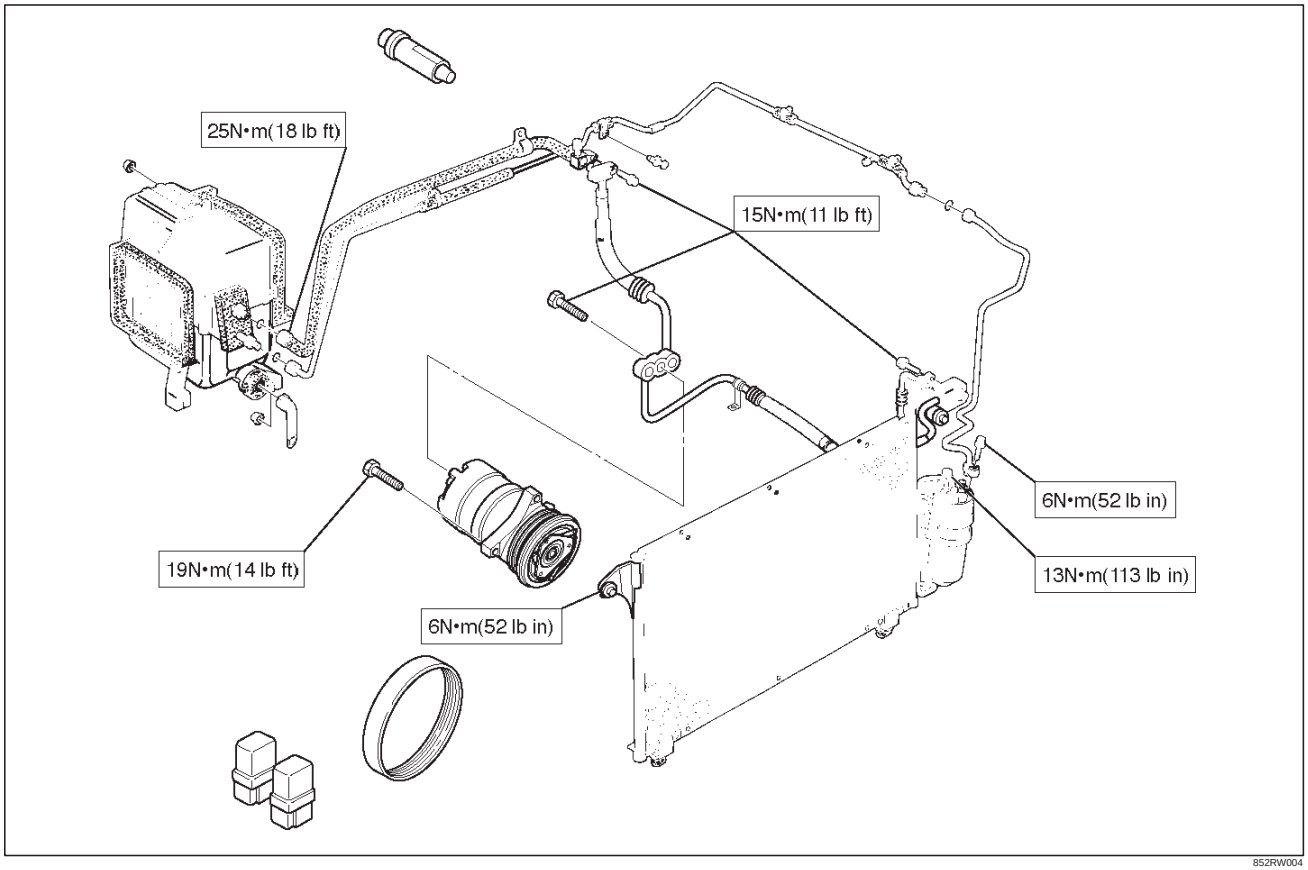

852RW004

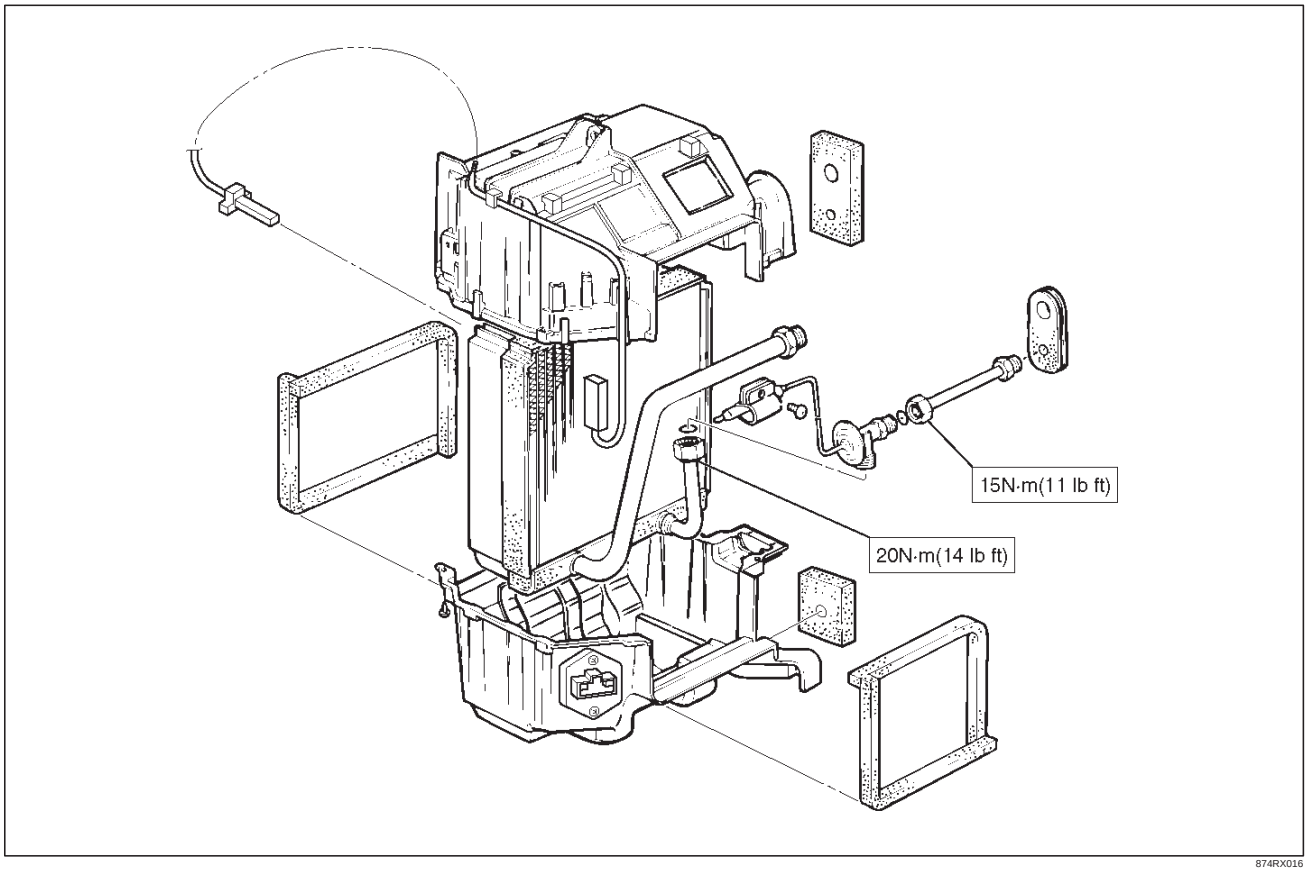

874RX016

Downloaded from www.Manualslib.com manuals search engine

Compressor

Service Precaution

WARNING: THIS VEHICLE HAS A SUPPLEMENTAL RESTRAINT SYSTEM (SRS). REFER TO THE SRS COMPONENT LOCATION VIEW IN ORDER TO DETERMINE WHETHER YOU ARE PERFORMING SERVICE ON OR NEAR THE SRS COMPONENTS OR THE SRS WIRING. WHEN YOU ARE PERFORMING SERVICE ON OR NEAR THE SRS COMPONENTS OR THE SRS WIRING, REFER TO THE SRS ON-VEHICLE SERVICE INFORMATION. FAILURE TO FOLLOW CAUTIONS COULD RESULT IN POSSIBLE AIR BAG DEPLOYMENT, PERSONAL INJURY, OR OTHERWISE UNNEEDED SRS SYSTEM REPAIRS.

CAUTION: Always use the correct fastener in the proper location. When you replace a fastener, use ONLY the exact part number for that application. ISUZU will call out those fasteners that require a replacement after removal. ISUZU will also call out the fasteners that require thread lockers or thread sealant. UNLESS OTHERWISE SPECIFIED, do not use supplemental coatings (paints, greases, or other corrosion inhibitors) on threaded fasteners or fastener joint interfaces. Generally, such coatings adversely affect the fastener torque and the joint clamping force, and may damage the fastener. When you install fasteners, use the correct tightening sequence and specifications. Following these instructions can help you avoid damage to parts and systems.

General Description

The HD6/HT6 Automotive Conditioning Compressor and Clutch Assembly is a light weight, six cylinder axial design consisting of three double ended pistons and weighs 5.8 kg (12.7 lbs.)

Although this compressor is the same for all vehicle applications, there are differences in installations, mounting brackets, pulleys, torque cushions and switches, none of which will affect the following overhaul procedures.

This compressor has a clutch driver design without torque cushion (1).

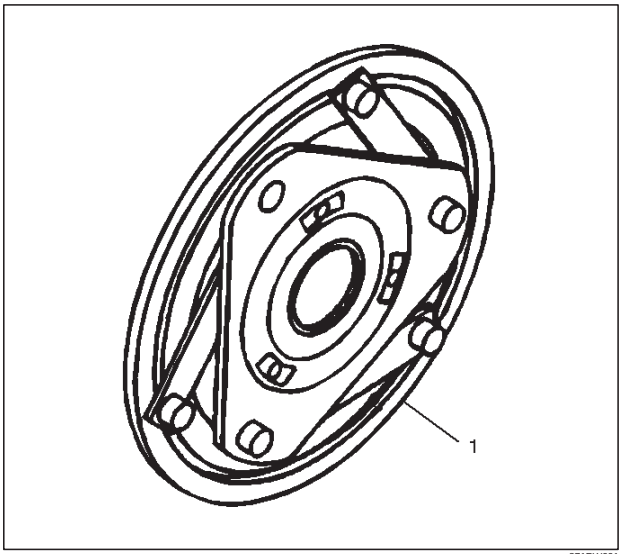

871RW001

Service compressors are supplied with either the control switches assembled in the rear head or a plug may be found where a control switch is required. If the service compressor requires control switches, the plug may be removed from the appropriate rear head switch cavity of the replaced compressor and assembled as prescribed in this manual.

When servicing the compressor, keep dirt or foreign material from getting on or into the compressor parts and system. Clean tools and a clean work area are important for proper service. The compressor connections and the outside of the compressor should be cleaned before any “on vehicle” repairs, or before removal of the compressor. The parts must be kept clean at all times and any parts to be reassembled should be cleaned with solvent, and dried with dry air. When necessary to use a cloth on any part, it should be of a non-lint producing type

Downloaded from www.Manualslib.com manuals search engine

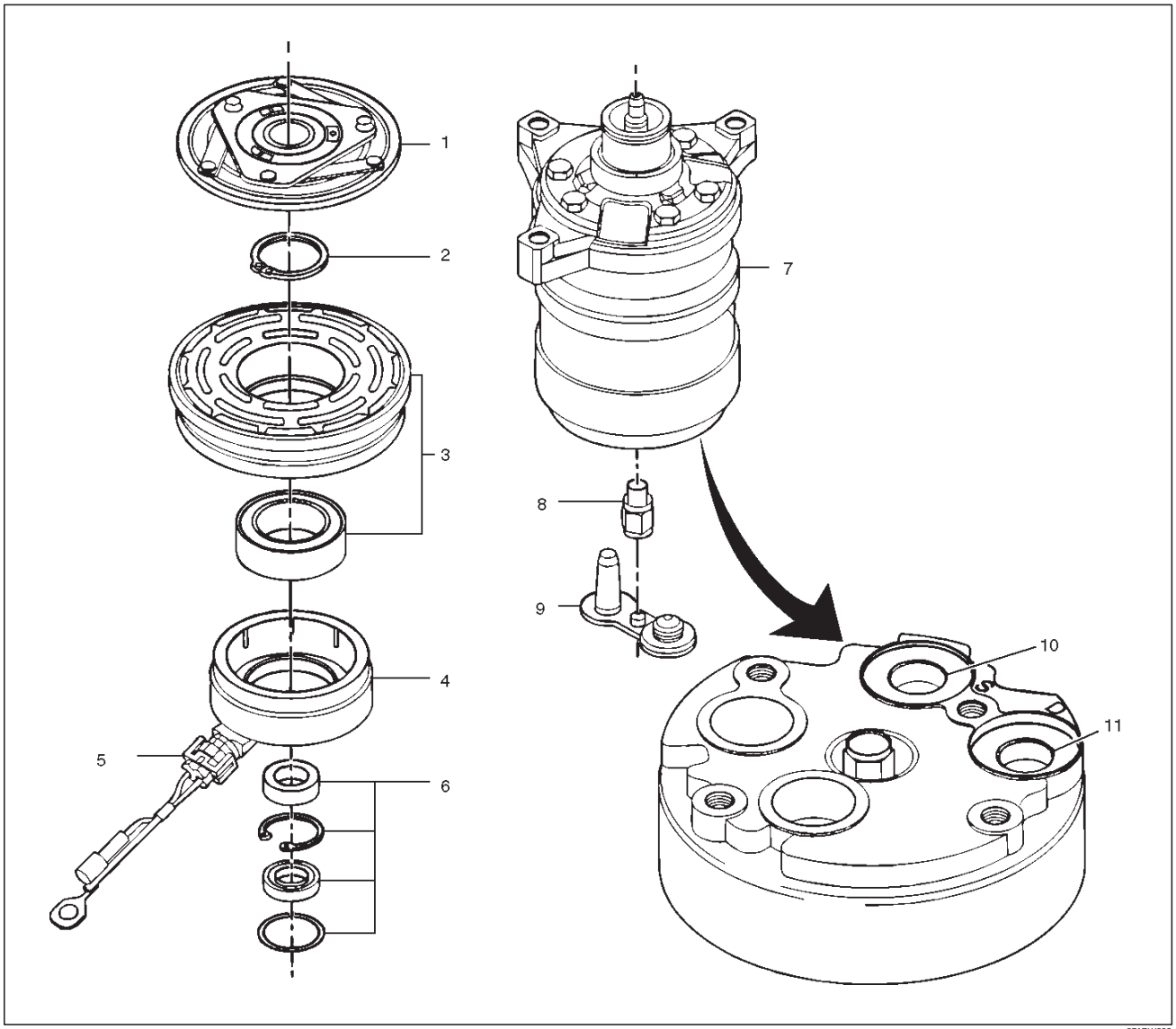

871RW002

Legend

(1) Clutch Driver
(2) Rotor Bearing Retainer
(3) Pulley Rotor and Bearing Assembly
(4) Clutch Coil Assembly
(5) Connector
(6) Shaft Seal Parts
(7) Pump Assembly
(8) High Pressure Relief Valve
(9) Shipping Cap
(10) Special 134a Suction Port
(11) Special 134a Discharge Port

The operations described below are based on bench overhaul with the compressor removed from the vehicle, except as noted. They have been prepared in order of accessibility of the components. When a compressor is removed from the vehicle for servicing, the amount of PAG lubricant remaining in the compressor should be drained, measured and recorded. This PAG lubricant should then be discarded and an equal amount of new PAG lubricant added to the compressor.
The service compressor is shipped without PAG oil. When service procedures require, use only Isuzu approved PAG oil.

Downloaded from www.Manualslib.com manuals search engine

Metric Thread Size Information

Compressor to mounting bracket bolts (Front)

M10 × 1.5 – 6H

Compressor to mounting bracket bolts (Rear)

M8 × 1.25 – 6H

Suction-discharge port screw

M10 × 1.5 – 6H

Compressor shaft

M9 × 1.25 – 6H

Internal hub-clutch drive assembly

M22 × 1.5 – 6H

Compressor Clutch Plate and Hub Assembly

Removal

1. Clamp the holding fixture J-33026 in a vise and attach compressor to holding fixture with thumb screws J-33026-1.
2. With center screw forcing tip in place to thrust against the end of the shaft, thread the Clutch Plate and Hub Assembly Installer-Remover J-33013-B into the hub. Hold the body of the remover with a wrench and turn the center screw into the remover body to remove the clutch plate and hub assembly (1).

CAUTION: Do not drive or pound on the clutch hub or shaft. Internal damage to compressor may result. The forcing tip on J-33013-B remover-installer center screw must be flat or the end of the shaft/axial plate assembly will be damaged.

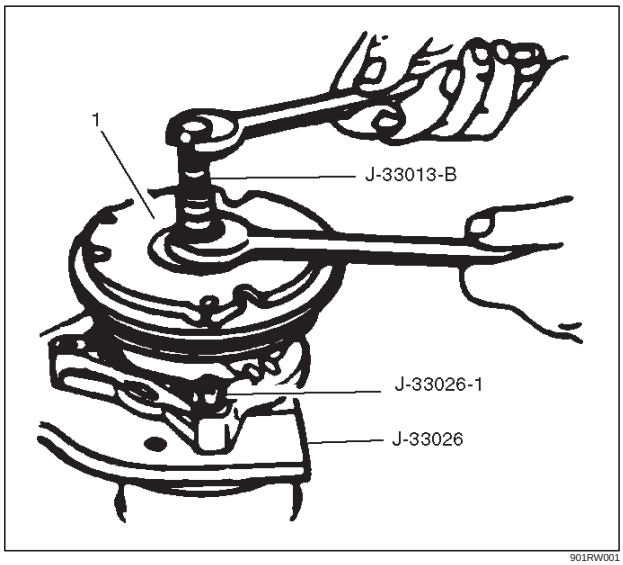

901RW001

3. Remove the shaft key and retain for reassembly.

Installation

1. Install the shaft key into the hub key groove. Allow the key to project approximately 3.2 mm (1/8 in) out of the keyway. The shaft key is curved slightly to provide an interference fit in the hub key groove.
2. Be sure the frictional surface of the clutch plate and the clutch rotor (2) are clean before installing the clutch plate and hub assembly (1).
3. Align the shaft key (4) with the shaft keyway (3) and place the clutch plate and the hub assembly onto the compressor shaft.

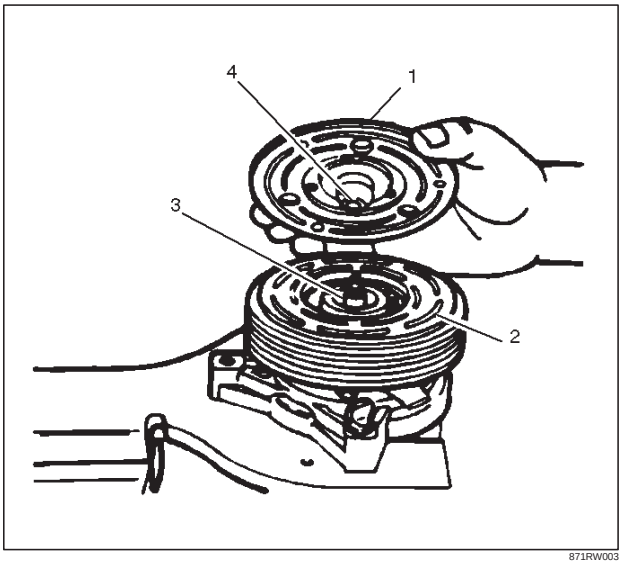

871RW003

4. Remove the forcing tip on J-33013-B clutch plate and hub assembly installer-remover center screw and reverse the body direction on the center screw, as shown in Figure.
5. Install the clutch plate and hub installer-remover J-33013-B with bearing as shown in Figure.

   The body of the J-33013-B installer-remover should be backed off sufficiently to allow the center screw to be threaded onto the end of the compressor shaft.
6. Hold the center screw with a wrench. Tighten the hex portion of the installer-remover J-33013-B body to press the hub onto the shaft. Tighten the body several turns, remove the installer and **check to see that the shaft key is still in place in the keyway before installing the clutch plate and hub assembly to its finial position**. The air gap (2) between frictional surfaces of the clutch plate and clutch rotor should be 0.50–0.76 mm (.020–.030 in).

CAUTION: If the center screw is threaded fully onto the end of the compressor shaft. or if the body of the

Downloaded from www.Manualslib.com manuals search engine

installer is held and the center screw is rotated, the key will wedge and will break the clutch hub.

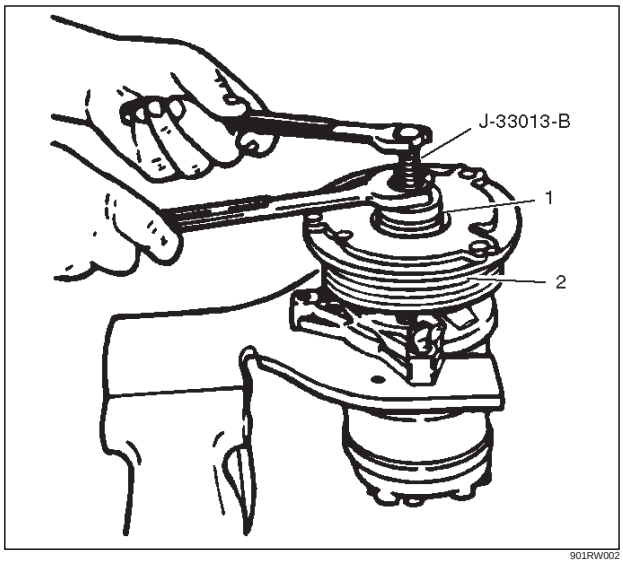

901RW002

7. Remove installer J-33013-B, check for proper positioning of the shaft key (even or slightly above the clutch hub).
8. Spin the pulley rotor by hand to see that the rotor is not rubbing the clutch drive plate.

Compressor Clutch Rotor and/or Bearing

Removal

1. Remove the clutch plate and hub assembly as described previously.
2. Remove rotor (1) and bearing assembly retaining ring (2), using snap ring pliers.

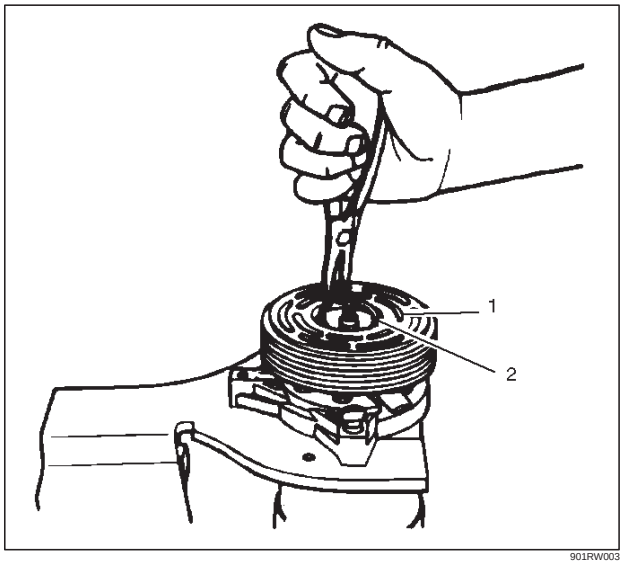

901RW003

3. Install pulley rotor and bearing puller guide J-33023-A to the front head and install J-41552 pulley rotor and bearing puller down into the inner circle of slots (1) in the rotor. Turn the J-41552 puller clockwise in the slots in the rotor.
4. Hold the J-41552 puller in place and tighten the puller screw against the puller guide to remove the pulley rotor and bearing assembly.

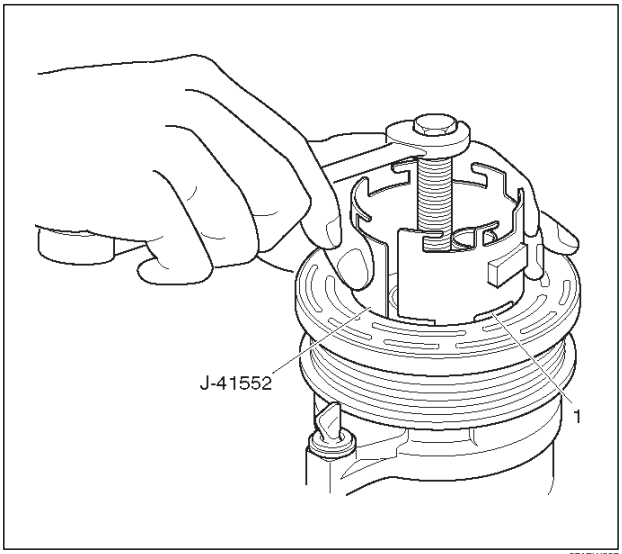

871RW007

Installation

1. With the compressor mounted to the J-34992 holding fixture, position the rotor and bearing assembly on the front head.
2. Position the J-33017 pulley, rotor and bearing installer and J-33023-A puller pilot directly over the inner race of the bearing.

Downloaded from www.Manualslib.com manuals search engine

3. Position puller crossbar J-8433-1 on the puller pilot J-33023-A and assemble the two J-33026 through bolts and washers through the puller bar slots and thread them into the J-33026 holding fixture. The thread of the through bolts should engage the full thickness of the holding fixture.
4. Tighten the center screw in the J-8433-1 puller crossbar to force the pulley rotor (1) and bearing assembly onto the compressor front head. Should the J-33017 pulley rotor and bearing installer slip off direct in-line contact with the inner race of the bearing, loosen the J- 8433-1 center forcing screw and realign the installer and pilot so that the J-33017 installer will properly clear the front head.

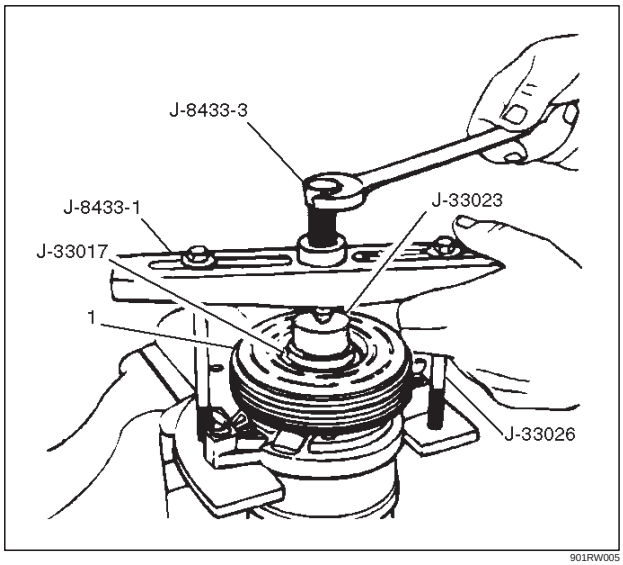

901RW005

5. Install rotor and bearing assembly retainer ring, using snap ring pliers .
6. Reinstall clutch plate and hub assembly as described previously.

Compressor Clutch Coil

Removal

1. Perform Steps 1 through 4 of “Clutch Rotor and/or Bearings” removal procedure. **Mark clutch coil terminal location (1) on compressor front head.**
2. Install J-33023-A puller pilot on front head of compressor. Also install J-8433-1 puller crossbar with J-33025 puller legs as shown in figure.
3. Tighten J-8433-3 forcing screw against the puller pilot to remove the clutch coil (2).

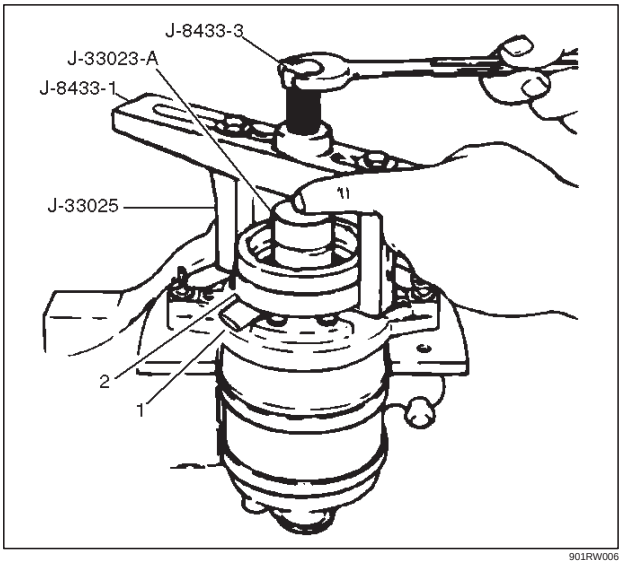

901RW006

Downloaded from www.Manualslib.com manuals search engine

Installation

1. Place the clutch coil assembly (1) on the front head with the terminals positioned at the “marked” location.
2. Place the J-33024 clutch coil installer over the internal opening of the clutch coil housing and align installer with the compressor front head.
3. Center the J-8433-1 puller crossbar in the counter-sunk center hole of the J-33024 clutch coil installer. Install the J-33026 through bolts and washers through the crossbar slots and thread them into the holding fixture J-33026 to full fixture thickness.

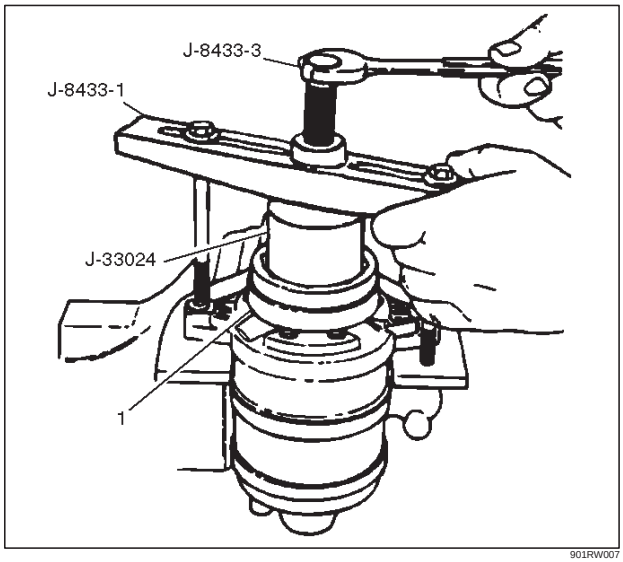

901RW007

4. Turn the center forcing screw of J-8433-1 puller crossbar to force the clutch coil onto the front head. Be sure clutch coil and J-33024 installer stay “in-line” during installation.
5. When coil is fully seated on the front head, use a 1/8 in diameter drift punch (2) and stake the front head at three places 120 degrees apart, to ensure clutch coil (3) remains in position.

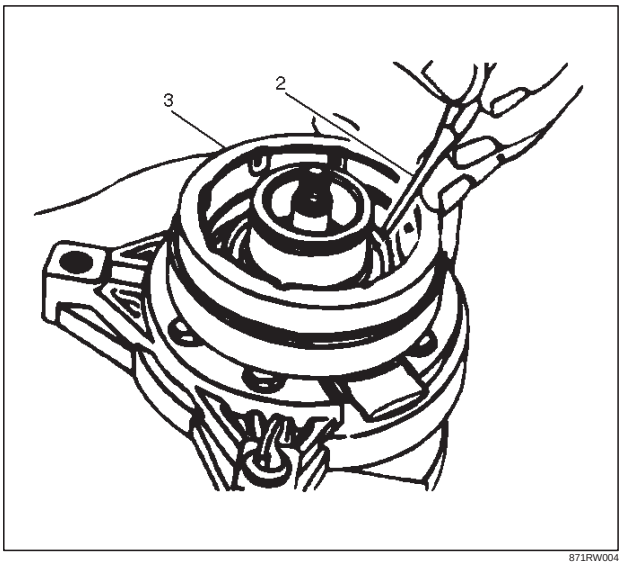

871RW004

- Stake size should be only one-half the area of the punch tip and be only approximately 0.28–0.35 mm (.010–.015 in) deep.

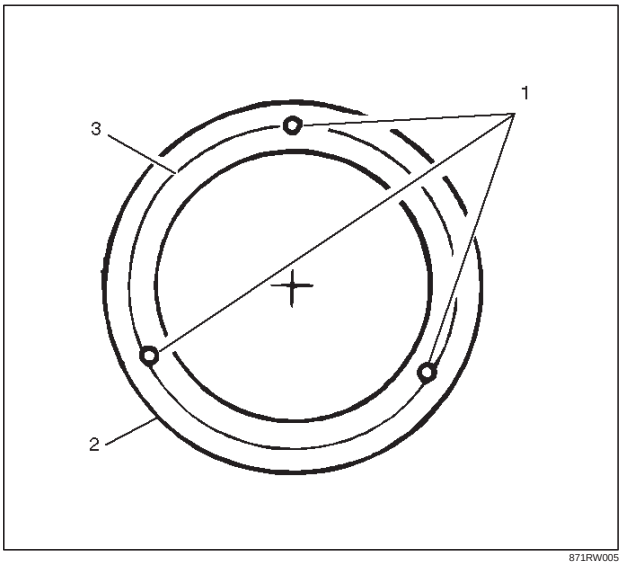

871RW005

Legend

(1) Stake Front Head 0.28–0.35 mm Deep (0.10–015 in)
(2) Clutch Coil Housing
(3) Front Head Surface

6. Install rotor and bearing assembly and the clutch plate and hub assembly as described previously.

Downloaded from www.Manualslib.com manuals search engine

Compressor Shaft Seal

Service Precaution

When replacing the shaft seal assembly, pressure relief valve or control switches, it will be necessary to recover the refrigerant. Other than clutch repair procedures, the same holds true for any disassembly of the compressor. A clean workbench covered with a sheet of clean paper, and a place (clean trays, etc) for all parts being removed and replaced is important, as is the use of proper clean service tools.

CAUTION: Any attempt to use makeshift or inadequate service tools or equipment may result in damage and/or improper compressor operation.

All parts required for servicing the internal compressor are protected by a preservative process and packaged in a manner which will eliminate the necessity of cleaning, washing or flushing of the parts. The parts can be used in the internal assembly just as they are removed from the service package. **Seals and protective packaging should be left intact until just prior to installation**.

If the compressor rear head, front head or cylinder and shaft assembly is to be serviced or replaced, the oil in the compressor must be drained, measured, recorded and replaced.

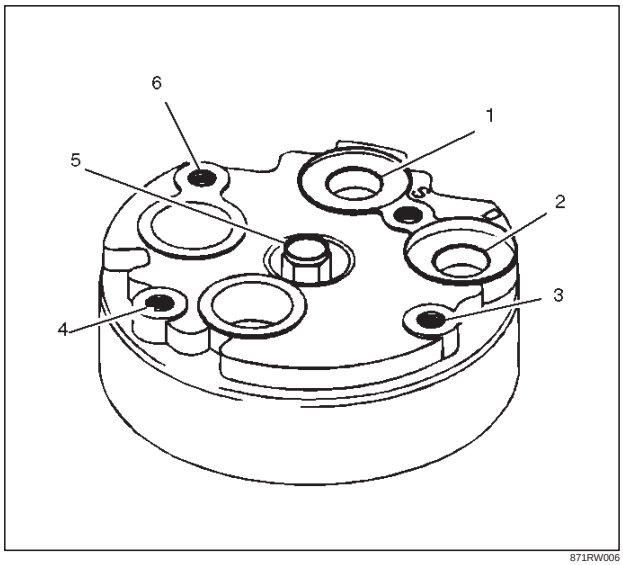

871RW006

Legend

(1) Suction Port
(2) Discharge Port
(3) Mounting Boss
(4) Mounting Boss
(5) Pressure Relief Valve
(6) Mounting Boss

Seal Leak Detection

A shaft seal should not be changed because of small amounts of oil found on an adjacent surface but only after actual refrigerant leakage is found using an approved leak detector.

CAUTION: Handling and care of seal protector is important. If seal protector is nicked or the bottom flared, the new seal may be damaged during installation.

Removal

1. Recover the refrigerant using Refrigerant Recovery System.
2. Loosen and reposition compressor in mounting brackets, if necessary.
3. Remove clutch plate and hub assembly from compressor as described previously.
4. Remove the shaft seal retainer ring, using snap ring pliers.
5. Thoroughly clean inside of compressor neck area surrounding the shaft, the exposed portion of the seal, the retainer ring groove and the shaft itself. Any dirt or foreign material getting into compressor may cause damage.
6. Fully engage the knurled tangs of Seal Remover-Installer J-23128-A into the recessed portion of the Seal (1) by turning the handle clockwise. Remove the Seal from the compressor with a rotary-pulling motion.

   Discard the seal. The handle must be hand-tightened securely. Do not use a wrench or pliers.

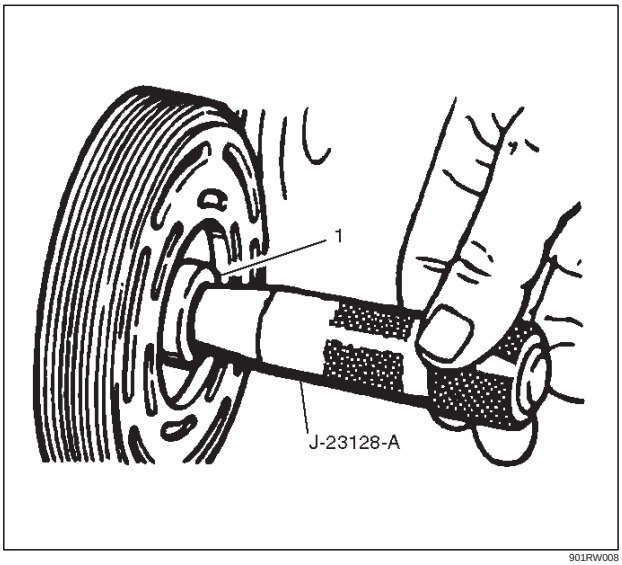

901RW008

Downloaded from www.Manualslib.com manuals search engine

7. Remove and discard the seal seat O-ring (2) from the compressor neck using O-ring remover J-9553-01.

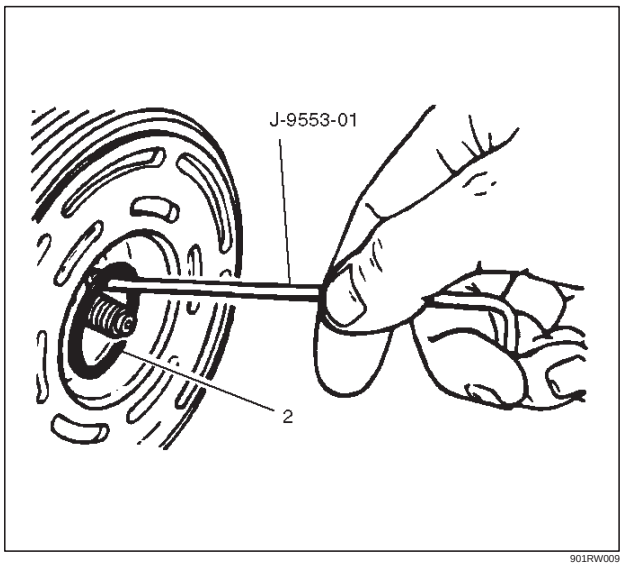

901RW009

8. Recheck the shaft and inside of the compressor neck for dirt or foreign material and be sure these areas are perfectly clean before installing new parts.

Cleaning

Thoroughly clean O-ring seal groove in front head.

CAUTION: Seals should not be re-used. Always use a new specification service seal on rebuild. Be sure that the seal to be installed is not scratched or damaged in anyway. Make sure that the seal seat and seal are free of lint and dirt that could damage the seal surface or prevent sealing.

Installation

1. Dip the new seal seat O-ring (1) in clean 525 viscosity refrigerant oil and assemble onto O-ring installer J-33011.

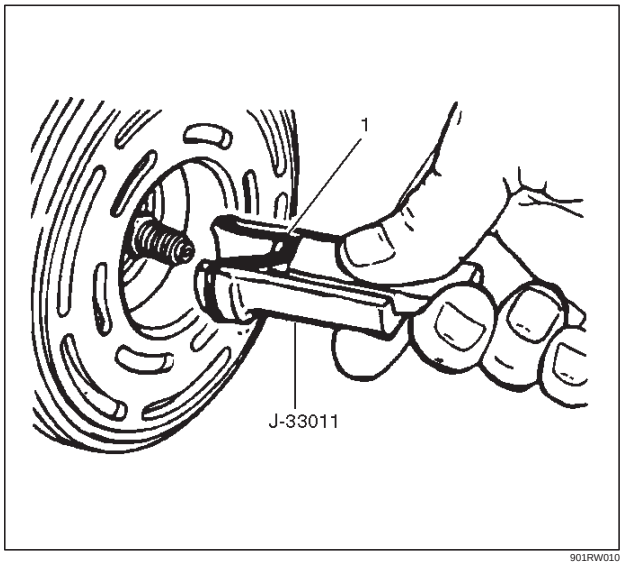

901RW010

2. Insert the O-ring installer J-33011 into the compressor neck until the installer “bottoms”. Lower the moveable slide of the O-ring installer to release the O-ring into the seal O-ring lower groove (The compressor neck top groove is for the shaft seal retainer ring.) Rotate the installer to seat the O-ring and remove the installer.
3. Dip the new seal in clean 525 viscosity refrigerant oil and assemble seal to Seal Installer J-23128-A, by turning handle clockwise. The stamped steel case side of the lip seal must be engaged with knurled tangs of installer so that flared-out side of lip seal is facing and installed towards the compressor. Install seal protector J-34614, in the seal lip and place over the compressor shaft, and push the seal in place with a rotary motion or place the seal protector J-34614 over end of compressor shaft, and slide the new seal onto the shaft with a rotary motion until it stops. Take care not to dislodge the O-ring. Be sure the seal (2) makes good contact with the O-ring. Disengage the installer from the seal and remove the installer J-23128-A and the seal protector J-34614.

CAUTION: Handling and care of seal protector is important. If seal protector is nicked or the bottom flared, the new seal may be damaged during installation.

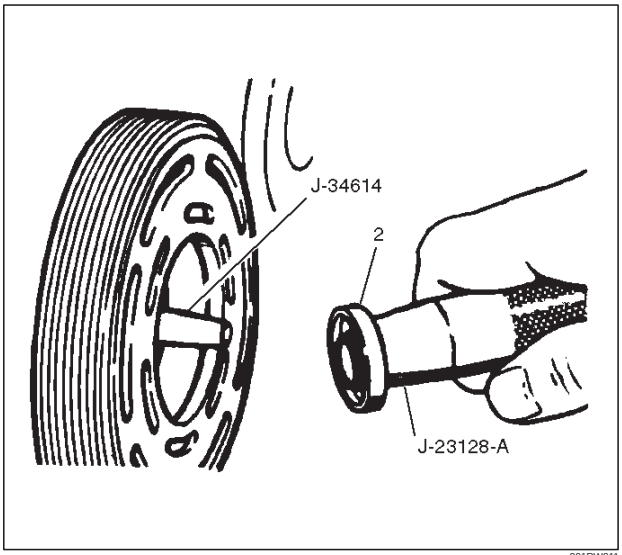

901RW011

4. Install the new seal retainer ring with its flat side against the Seal, using Snap-Ring Pliers. Use the sleeve from O-ring installer J-33011 to press in on the seal retainer ring so that it snaps into its groove.
5. To leak test, install compressor leak test fixture J-39893 on rear head of compressor and connect gage charging lines and Refrigerant Recovery System. Pressurize suction and high-side of compressor with R-134a Refrigerant. Temporarily install (M9 × 1.25 thread on shaft) nut and, with the compressor in horizontal position, rotate the compressor shaft in normal direction of rotation several times by hand. Leak test the seal area and correct and leak found. Recover the refrigerant. Remove shaft nut.

Downloaded from www.Manualslib.com manuals search engine

6. Remove any excess oil resulting from installing the new seal parts from the shaft and inside the compressor neck.
7. Install the clutch plate and hub assembly as described previously.
8. Reinstall compressor belt and tighten bracket.
9. Evacuate and charge the refrigerant system.

Compressor Pressure Relief Valve

Removal

1. Recover the refrigerant using Refrigerant Recovery System.
2. Remove old pressure relief valve.

Installation

1. Clean valve seat area on rear head.
2. Lubricate O-ring of new pressure relief valve and O-ring assembly with new 525 viscosity refrigerant oil. Install new valve and torque in place, 9.0 N·m (6.1 ft lbs)
3. Evacuate and recharge the system.
4. Leak test system.

Compressor Oil

Compressor Oil Check

The oil used to lubricate the compressor is circulating with the refrigerant.
Whenever replacing any component of the system or a large amount of gas leakage occurs, add oil to maintain the original amount of oil.

(Oil Capacity)	
Capacity total in system	150 cc (5.0 fl.oz)
Compressor (Service parts) charging amount	150 cc (5.0 fl.oz)

Checking and Adjusting Oil Quantity for Used Compressor

1. Perform oil return operation. Refer to Oil Return Operation in this section.
2. Discharge and recover refrigerant and remove the compressor.
3. Drain the compressor oil and measure the extracted oil with a measuring cylinder.
4. If the amount of oil drained is much less than 90 cc (3.0 fl. oz.), some refrigerant may have leaked out. Conduct a leak tests on the connections of each system, and if necessary, repair or replace faulty parts.
5. Check the compressor oil contamination. (Refer to Contamination of Compressor Oil in this section.)
6. Adjust the oil level following the next procedure below.

(Collected Amount)	(Charging Amount)
more than 90 cc (3.0 fl.oz)	same as collected amount
less than 90 cc (3.0 fl.oz)	90 cc (3.0 fl.oz)

7. Install the compressor, then evacuate, charge and perform the oil return operation.
8. Check system operation.

When it is impossible to preform oil return operation, the compressor oil should be checked in the following order:

1. Discharge and recover refrigerant and remove the compressor.
2. Drain the compressor oil and measure the extracted oil with a measuring cylinder.
3. Check the oil for contamination.
4. If more than 90 cc (3.0 fl. oz.) of oil is extracted from the compressor, supply the same amount of oil to the compressor to be installed. If the amount of oil extracted is less than 90 cc (3.0 fl. oz.), recheck the compressor oil in the following order:
5. Supply 90 cc (3.0 fl. oz.) of oil to the compressor and install it onto the vehicle.
6. Evacuate and recharge with the proper amount of refrigerant.
7. Perform the oil return operation.
8. Remove the compressor and recheck the amount of oil.
9. Adjust the compressor oil, if necessary.

(Collected Amount)	(Charging Amount)
more than 90 cc (3.0 fl.oz)	same as collected amount
less than 90 cc (3.0 fl.oz)	90 cc (3.0 fl.oz)

Checking and Adjusting for Compressor Replacement

The oil is not charged in compressor (service parts). So it is necessary to charge the proper amount of oil to the new compressor.

Downloaded from www.Manualslib.com manuals search engine

1. Perform oil return operation.
2. Discharge and recover the refrigerant and remove the compressor.
3. Drain the compressor oil and measure the extracted oil.
4. Check the compressor oil for contamination.
5. Adjust the oil level as required.

(Amount of oil drained from used compressor)	(Charging amount of oil to new compressor)
more than 90 cc (3.0 fl.oz)	same as drained amount
less than 90 cc (3.0 fl.oz)	90 cc (3.0 fl.oz)

6. Evacuate, charge and perform the oil return operation.
7. Check the system operation.

Contamination of Compressor Oil

Unlike engine oil, no cleaning agent is added to the compressor oil. Even if the compressor runs for a long period of time (approximately one season), the oil never becomes contaminated as long as there is nothing wrong with the compressor or its method of use.

Inspect the extracted oil for any of the following conditions:

- The capacity of the oil has increased.
- The oil has changed to red.
- Foreign substances, metal powder, etc., are present in the oil.

If any of these conditions exists, the compressor oil is contaminated. Whenever contaminated compressor oil is discovered, the receiver/drier must be replaced.

Oil Return Operation

There is close affinity between the oil and the refrigerant. During normal operation, part of the oil recirculates with the refrigerant in the system. When checking the amount of oil in the system, or replacing any component of the system, the compressor must be run in advance for oil return operation. The procedure is as follows:

1. Open all the doors and the engine hood.
2. Start the engine and air conditioning switch to “ON” and set the fan control knob at its highest position.
3. Run the compressor for more than 20 minutes between 800 and 1,000 rpm in order to operate the system.
4. Stop the engine.

Replacement of Component Parts

When replacing the system component parts, supply the following amount of oil to the component parts to be installed.

(Component parts to be installed)	(Amount of Oil)
Evaporator	50 cc (1.7 fl. oz.)
Condenser	30 cc (1.0 fl. oz.)
Receiver/dryer	30 cc (1.0 fl. oz.)
Refrigerant line (one piece)	10 cc (0.3 fl. oz.)

Compressor Leak Testing (External and Internal)

Bench-Check Procedure

1. Install test plate J-39893 on rear head of compressor.
2. Using Refrigerant Recovery System, attach center hose of manifold gage set on charging station to a refrigerant drum standing in an upright drum.
3. Connect charging station high and low pressure lines to corresponding fittings on test plate J-39893. Suction port (low-side) of compressor has large internal opening. Discharge port (high-side) has smaller internal opening into compressor and deeper recess.
4. Open low pressure control, high pressure control and refrigerant control on charging station to allow refrigerant vapor to flow into compressor.
5. Using a leak detector, check for leaks at pressure relief valve, rear head switch location, compressor front and rear head seals, center cylinder seal, through bolt head gaskets and compressor shaft seal. After checking, shut off low pressure control and high-pressure control on charging station.
6. If an external leak is present, perform the necessary corrective measures and recheck for leaks to make certain the leak has been connected.
7. Recover the refrigerant.
8. Disconnect both hoses from the test plate J-39893.
9. Add 90 ml (3 oz.) new PAG lubricant to the compressor assembly. Rotate the complete compressor assembly (not the crankshaft or drive plate hub) slowly several turns to distribute oil to all cylinder and piston areas.
10. Install a M9 × 1.25 threaded nut on the compressor crankshaft if the drive plate and clutch assembly are not installed.
11. Using a box-end wrench or socket and handle, rotate the compressor crankshaft or clutch drive plate on the crankshaft several turns to insure piston assembly to cylinder wall lubrication.
12. Using Refrigerant Recovery System, connect the charging station high-pressure line to the test plate J-39893 high-side connector.
13. Using Refrigerant Recovery System, connect the charging station low-pressure line to the low pressure port of the test plate J-39893. Oil will drain out of the compressor suction port if the compressor is positioned with the suction port downward.

Downloaded from www.Manualslib.com manuals search engine

14. Attach the compressor to the J-34992 holding fixture and mount the compressor in a vise so that the compressor will be in a horizontal position and the shaft can be turned with a wrench.
15. Using a wrench, rotate the compressor crankshaft or drive plate hub ten complete revolutions at a speed of approximately one-revolution per second turning the compressor at less than one-revolution per second can result in a lower pump-up pressure and disqualify a good pumping compressor.
16. Observe the reading on high-pressure gauge at the completion of the tenth revolution of the compressor. The pressure reading for a good pumping compressor should be 690 kPa (100 psi) or above. A pressure reading of less than 620 kPa (90 psi) would indicate one or more suction and/or discharge valves leaking an internal leak, or an inoperative valve, and the refrigerant must be recovered and the compressor disassembled and checked for cause of leak. Repair as needed, reassemble and repeat the pump-up test. Externally leak test.
17. When the pressure pump-up test is completed, recover the refrigerant from the high-side and remove the test plate J-39893.
18. Tilt the compressor so that the compressor suction and discharge ports are down. Drain the PAG lubricant from the compressor.
19. Allow the compressor to drain for 10 minutes, then refill with the proper amount of PAG lubricant, per oil balance procedure described previously. The PAG lubricant may be poured into the suction port. If further assembly or processing is required, a shipping plate or test plate J-39893 should be installed to keep out air, dirt and moisture until the compressor is installed.

Downloaded from www.Manualslib.com manuals search engine

Special Tools

ILLUSTRATION	**TOOL NO.** TOOL NAME
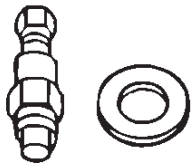 901RW012	**J-33013-B** Hub and Clutch Drive Plate Asm. remover
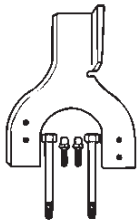 901RW013	**J-33026** Compressor Holding Fixture
901RW015	**J-33023-A** Puller Pilot
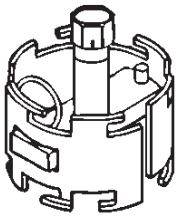 901RW016	**J-41552** Pulley Puller
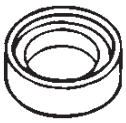 901RW017	**J-33017** Pulley and Bearing Assembly Installer
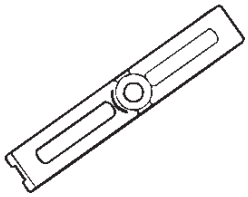 901RW018	**J-8433-1** Puller Bar

ILLUSTRATION	**TOOL NO.** TOOL NAME
901RW019	**J-8433-3** Forcing Screw
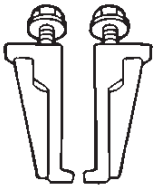 90RW020	**J-33025** Clutch Coil Installer Adapter
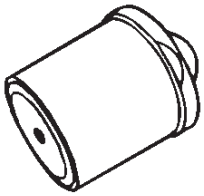 901RW021	**J-33024** Clutch Coil Installer Adapter
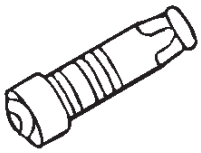 901RW024	**J-23128-A** Seal Seat Remover and Installer
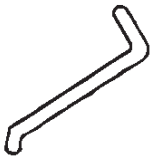 901RW025	**J-9553-01** O-Ring Remover
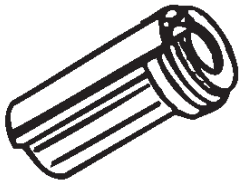 901RW026	**J-33011** O-Ring Installer

Downloaded from www.Manualslib.com manuals search engine

ILLUSTRATION	**TOOL NO.** TOOL NAME
 901RW027	**J-34614** Shaft Seal Protector
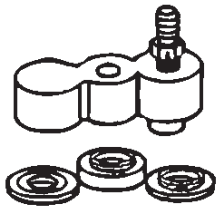 901RW032	**J-39893** Pressure Testing Connector

Downloaded from www.Manualslib.com manuals search engine

Automatic Air Conditioning System

General Description

Using a variety of sensors, this automatic heater and air conditioner accurately senses outside air temperature, solar radiation quantity, evaporator's blowing temperature, and interior temperature, then enters these data to the automatic heater/air conditioner control unit (equipped with the built-in micro-computer). The data provided to the control unit enables to automatically control blow temperature and blow air quantity, turn on or off the compressor and switch the blow port as well as switching between the fresh air intake and interior air circulation.

Resetting the automatic function allows you to switch to the manual control mode.

The self-diagnoisis function of the automatic heater and air conditioner control unit (with the built–in micro–computer) allows the unit to access and diagnose a failed part easier and quicker.

Full Automatic Air Conditioner Parts Configuration

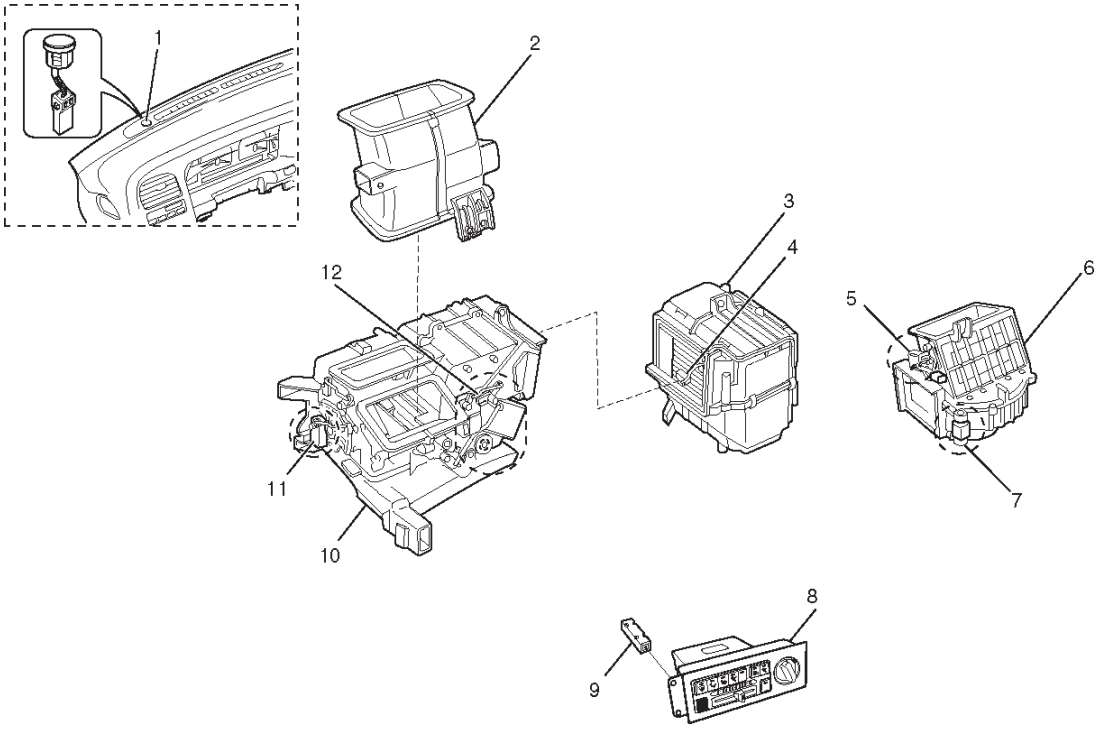

865RY00008

Legend

(1) Sun Sensor
(2) Lower Center Vent Box
(3) Evaporator Assembly
(4) Duct Sensor
(5) Intake Actuator
(6) Blower Unit
(7) Max – High Relay
(8) Automatic Air Conditioner Control Unit
(9) In Car Sensor
(10) Heater Unit
(11) Mode Actuator
(12) Mix Actuator

Downloaded from www.Manualslib.com manuals search engine

Refrigerant Line and Associated Parts

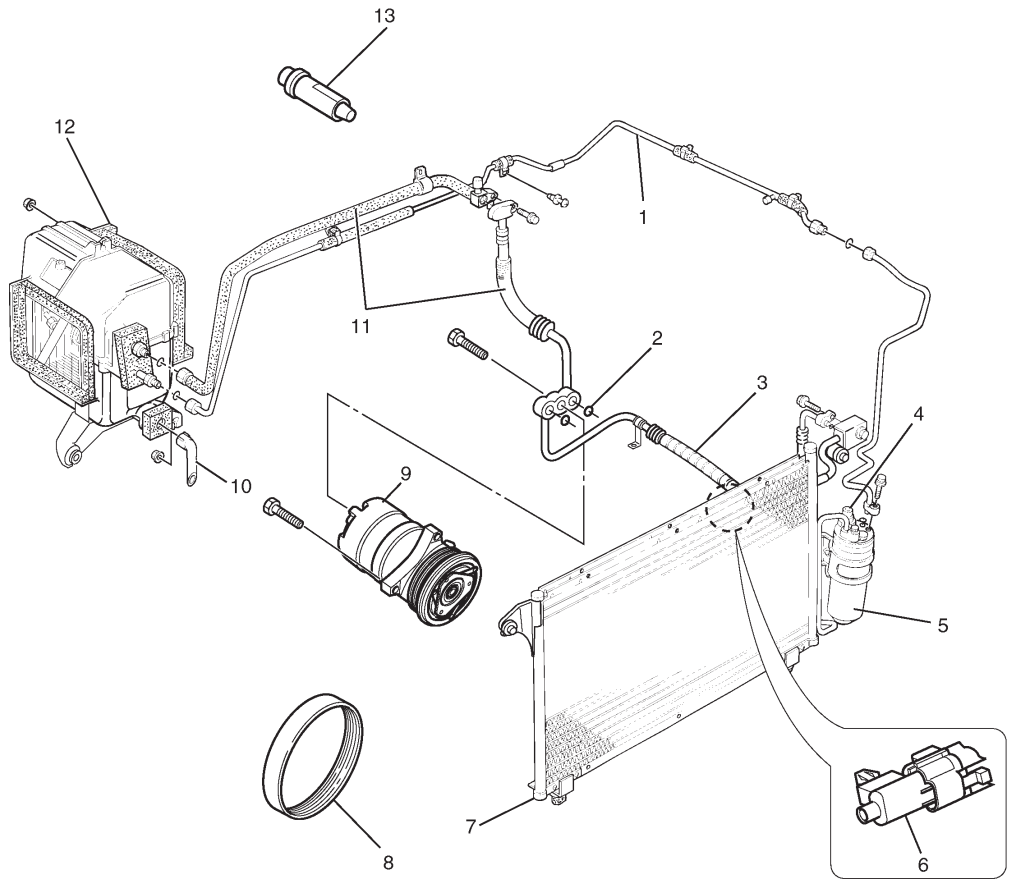

852RY00002

Legend

(1) Liquid Line (High Pressure Pipe)
(2) O – Ring
(3) Discharge Line (High Pressure Hose)
(4) Pressure Switch
(5) Receiver Drier
(6) Ambient Sensor
(7) Condenser Assembly
(8) Drive Belt
(9) Compressor
(10) Drain Hose
(11) Suction Line (Low-Pressure Hose)
(12) Evaporator Assembly
(13) A/C Switch

Downloaded from www.Manualslib.com manuals search engine

Circuit Diagram

6VE1 Engine

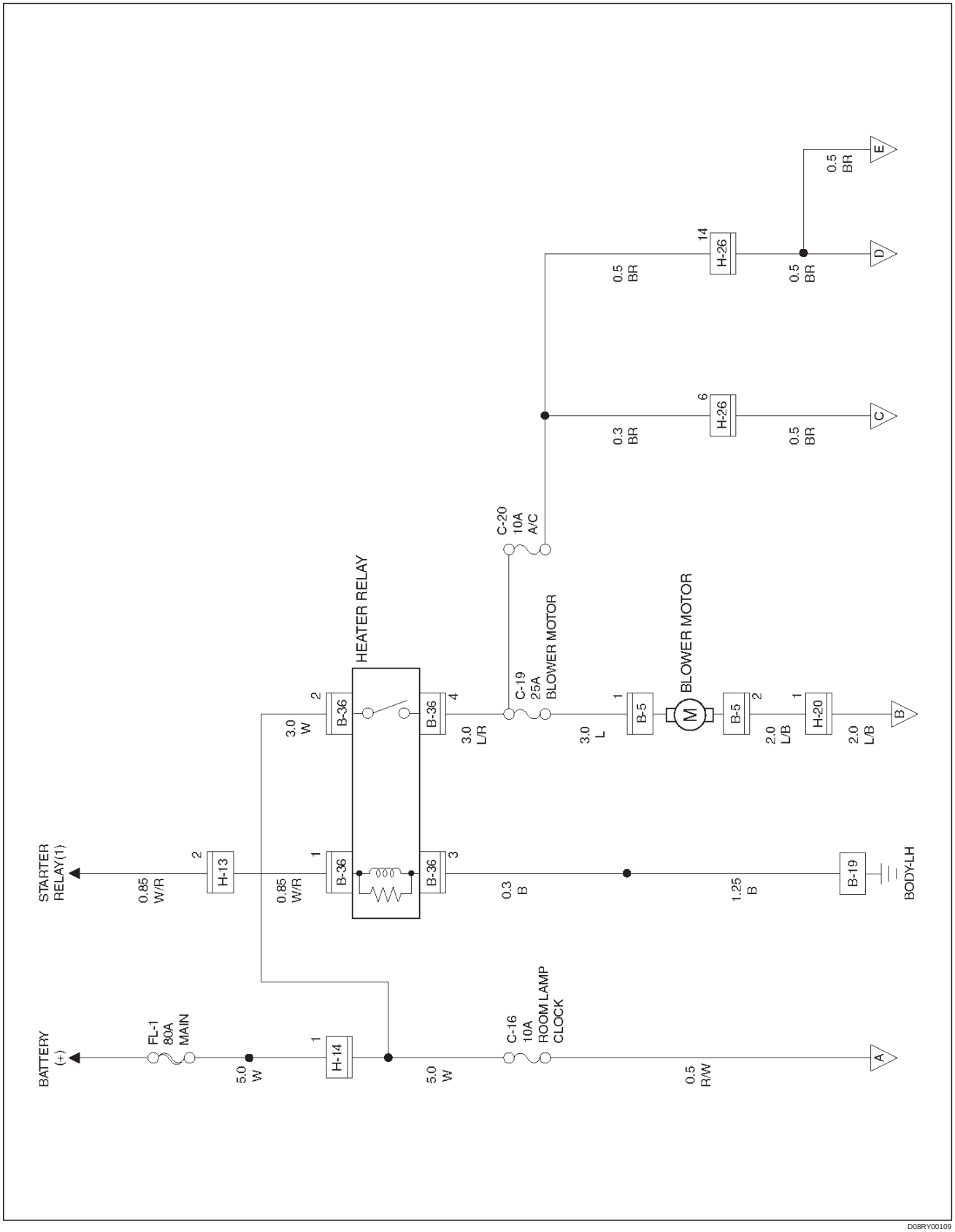

D08RY00109

Downloaded from www.Manualslib.com manuals search engine

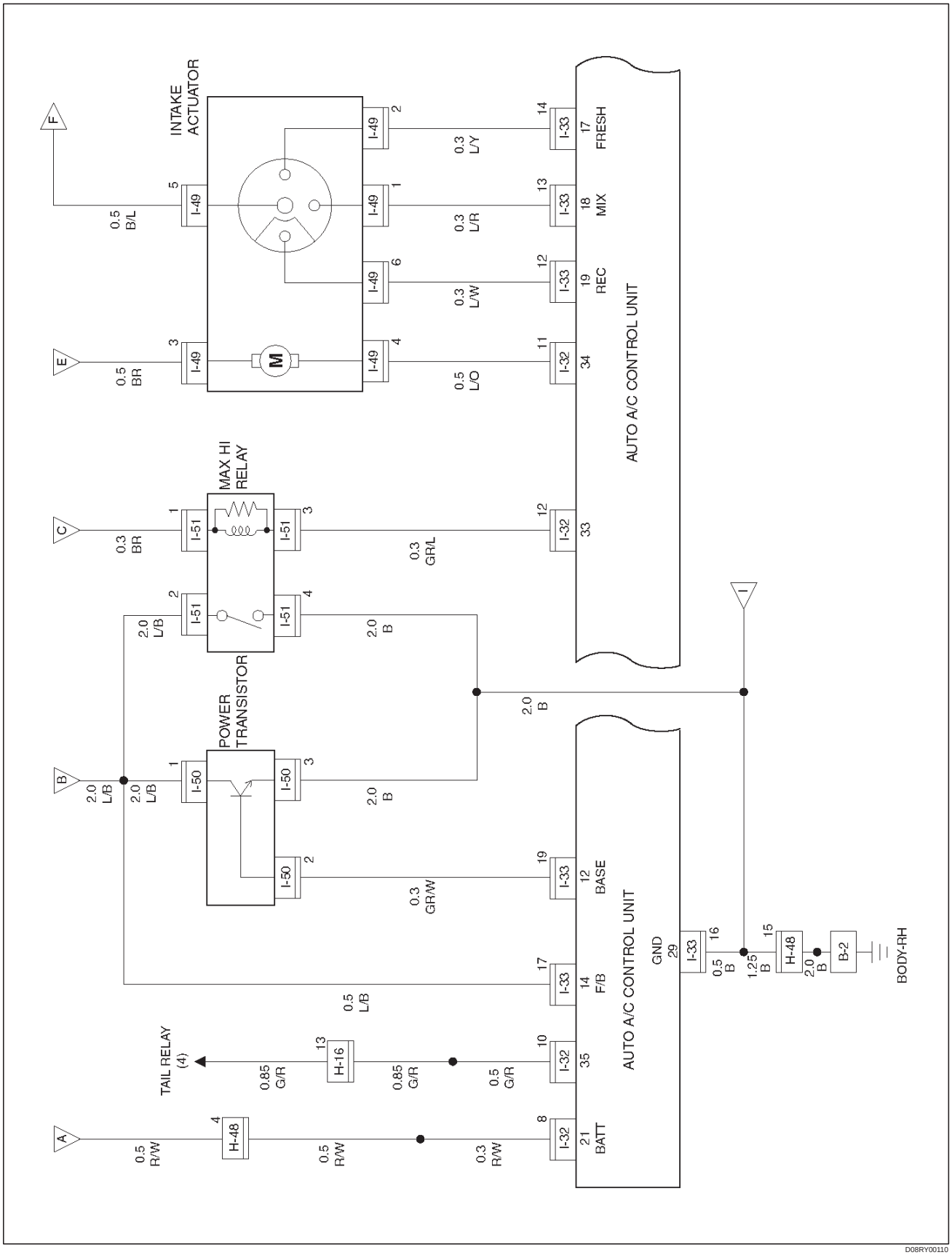

Downloaded from www.Manualslib.com manuals search engine

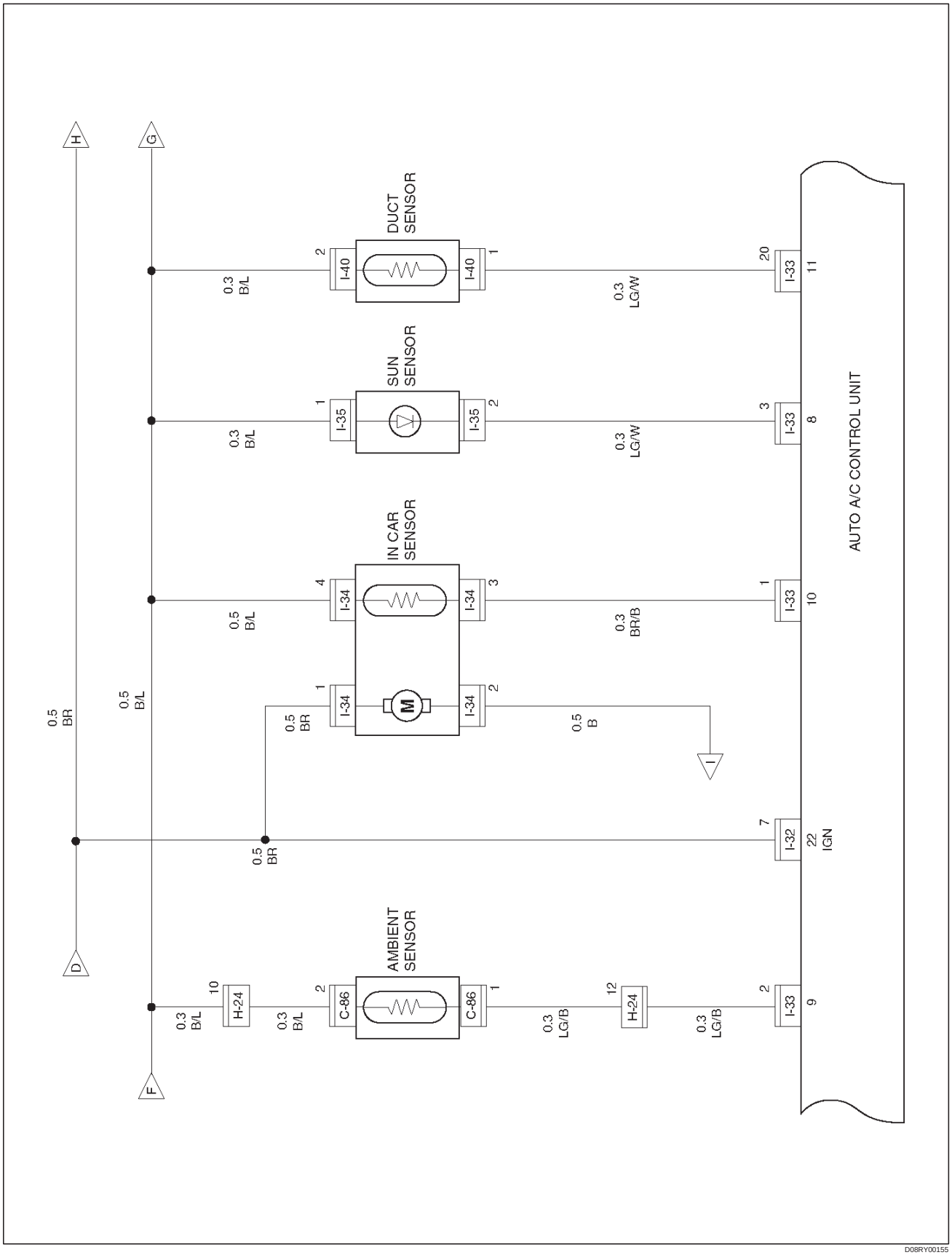

Downloaded from www.Manualslib.com manuals search engine

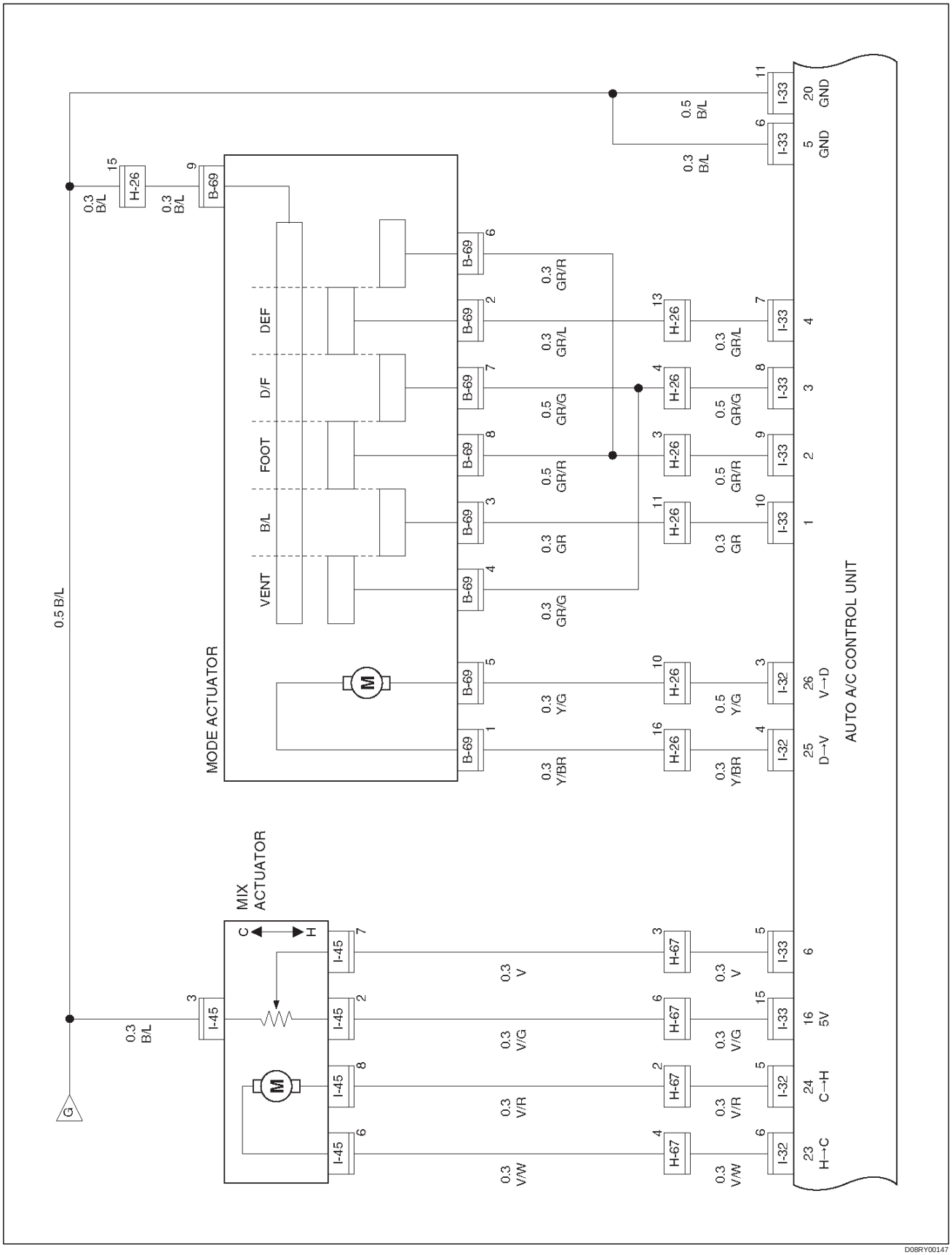

Downloaded from www.Manualslib.com manuals search engine

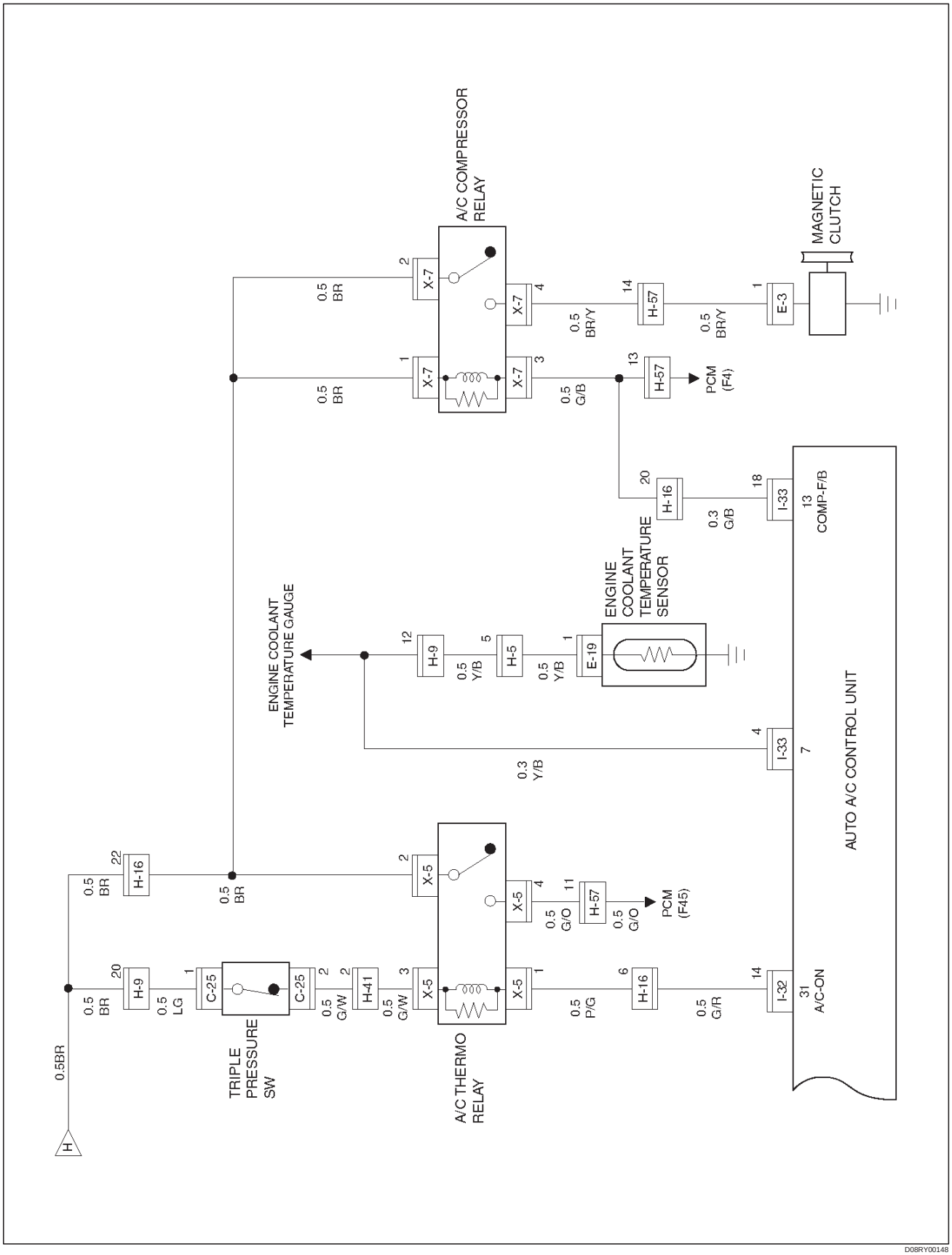

D08RY00148

Downloaded from www.Manualslib.com manuals search engine

Functions and Features

Automatic interior temperature control

This function enables to maintain the interior temperature at the level specified from the temperature control switch despite of changes in factors such as vehicle speeds, outside air temperature and number of passengers.

Maximum cooling and heating function

You can select FC (Full cool, namely maximum cooling temperature) or FH (Full heat, maximum heating temperature) from the temperature control lever.

Automatic air flow control

Air flow is automatically and consecutively fine tuned according to the specified interior temperature and changes in aperture of the heater unit mix door.

Mode (blow port) control

This function automatically selects either one of the VENT, BI-LEVEL, FOOT or DEF mode for the blow port according to changes of temperature on the blow port. Using the mode switch allows you to select a desired blow port manually.

Intake (switching between the fresh air intake and circulation of interior air) control

The intake (switching between fresh air intake and circulation of interior air) mode automatically selects either FRESH (fresh air intake), MIX or RECIRC (interior air circulation) according to changes of the blow port temperature. Using the intake switch allows you to select a desired intake port manually (in the manual operation, FRESH and RECIRC modes alone are available). Pressing the DEF (defrost) mode switch selects the FRESH (fresh air intake).

Cooler start-up timing control

This function is used for maintaining the air flow at “LOW” level until the evaporator is sufficiently cooled down. It is intended to prevent a large volume of hot air being blowing into inside of a vehicle when the cooler is turned on in hot summer season.

Heater start-up timing control

This function is used for maintained the air flow at “LOW” level and also for maintaining the defrost mode until temperature of coolant in the heater core is sufficiently heated. It is intended to prevent a large volume of cool air being blown into inside of a vehicle when the heater is turned on in cold winter season.

Solar radiation quantity offset control

The photodiode on the sun sensor determines solar radiation quantity accurately to offset interior temperature quickly.

Switch position storing function

This function is used for storing switch positions being selected in the immediately preceding operation, namely the last time the ignition has been turned off. It simplifies the setup procedures when restarting the system.

Self-diagnosis function

The self-diagnosis function turned on from the panel switch makes your troubleshooting easier (for detail of this function, refer to the section titled “Self-Diagnosis”).

Downloaded from www.Manualslib.com manuals search engine

Automatic Air Conditioner Block Diagram

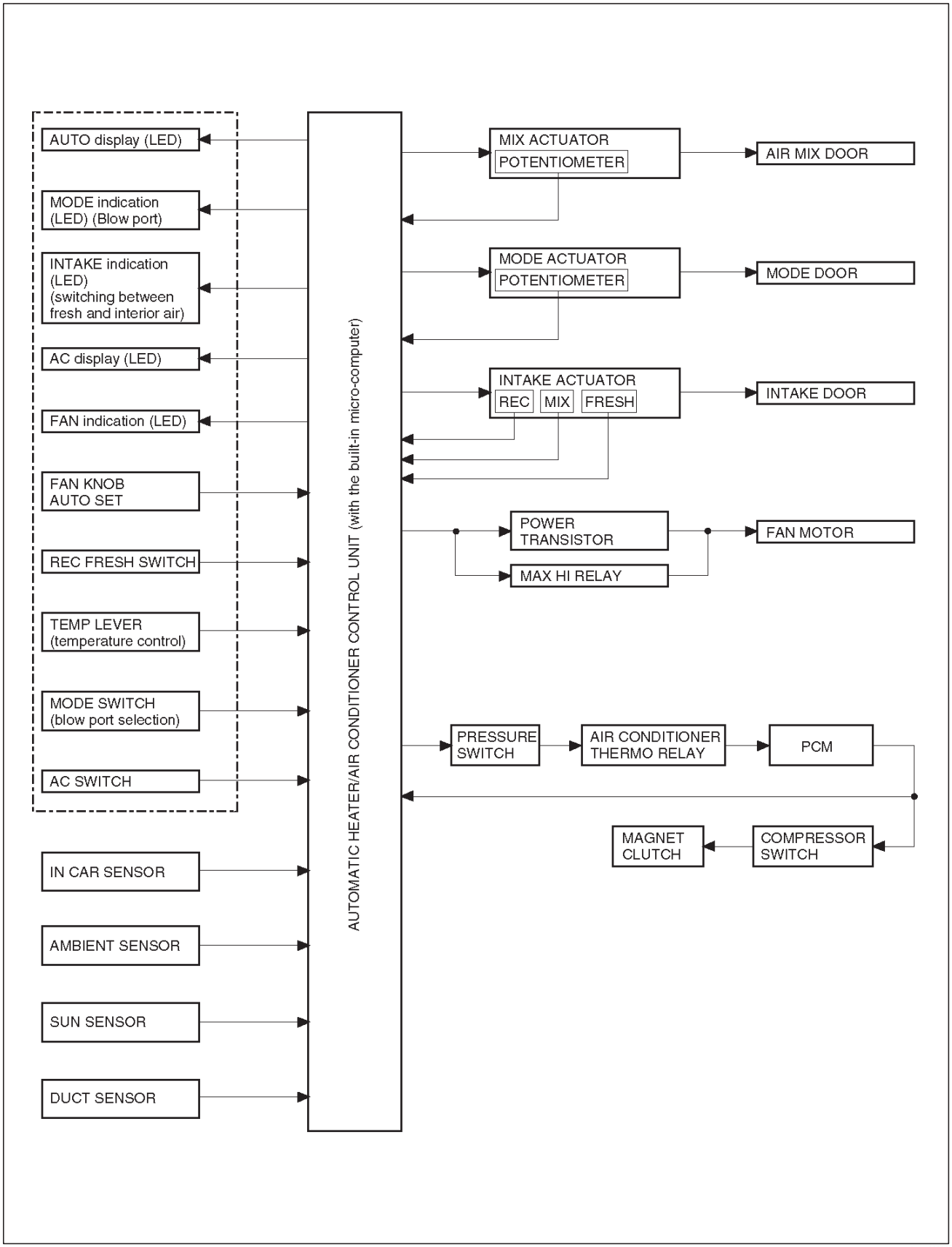

F01RY00006

Downloaded from www.Manualslib.com manuals search engine

Control Panel Layout

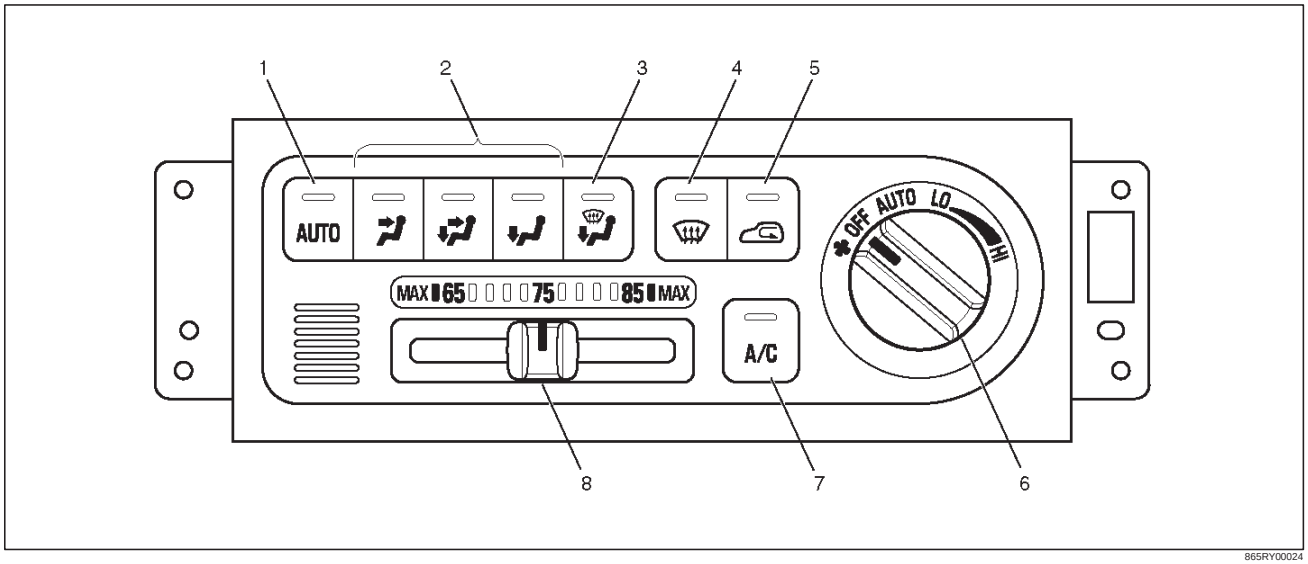

Legend

(1) Auto Switch
(2) Mode Switch
(3) DEF/FOOT Switch
(4) DEF Switch
(5) Intake Switch
(6) Fan Switch
(7) Air Conditioning Switch
(8) Temperature Control Knob

Downloaded from www.Manualslib.com manuals search engine

Air Control Functions

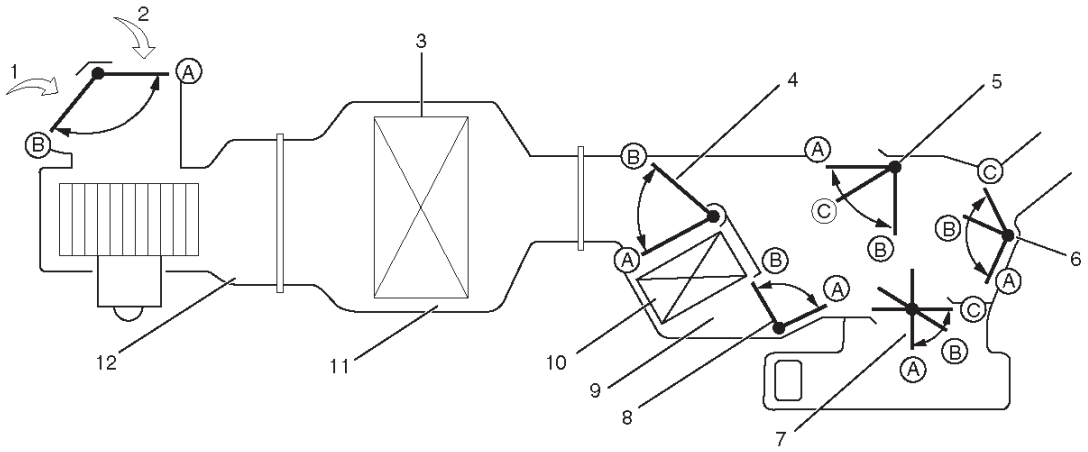

	Mode Position					Display of Intake Status		Set Temperature		
	VENT	BI-LEVEL	FOOT	DEF/FOOT	DEF	ON	OFF	Blue FULL COLD	White 65~85°C	Red FULL HOT
Vent Door	A	B	C	C	C	—	—	—	—	—
Foot Door	C	B	A	B	C	—	—	—	—	—
DEF Door	A	A	A	C	B	—	—	—	—	—
Intake Door	—	—	—	—	—	A	B	—	—	—
Air Mix Door	—	—	—	—	—	—	—	A	A ~ B	B
Sub Air Mix Door	—	—	—	—	—	—	—	B	B ~ A	A

C01RY00004

Legend

(1) Interior Air Intake
(2) Fresh Air Intake
(3) Evaporator Core
(4) Air Mix Door
(5) DEF Door
(6) VENT Door
(7) FOOT Door
(8) Sub Air Mix Door
(9) Heater Unit
(10) Heater Core
(11) Evaporator Unit
(12) Blower Unit

Downloaded from www.Manualslib.com manuals search engine

Operation and Functions of Control Panel Switches

Auto Switch

1. Pressing this switch turns on the automatic control mode. It resets all manual switches except that for the fan control. However, when the Manual REC is selected for the intake or the Manual Open is selected, the modes are maintained.
2. It causes the A/C (air conditioner) to the ON mode (this function, however, available only when the fan is turned on and also the compressor is turned on because of the given outside air temperature level).

Indication

- The AUTO LED is turned off.
- Currently selected mode for the Mode and Intake are respectively indicated.
- The A/C LED remains turned on even if the compressor has been turned off because of the given outside air temperature level. Pressing the air conditioning switch in this state turns off the A/C LED.

Mode Switch

1. Pressing the VENT, B/L or FOOT switch selects the corresponding mode.
2. When the Auto is selected for the Mode and Intake, pressing the mode switch fixes the Intake to the immediately preceding status.

Indication

- The AUTO LED is turned off.
- Currently selected blow port is indicated.

DEF Switch

Press this switch to select the DEF mode.

Blow port	Intake port	A/C	MIX
DEF	Auto FRESH *1	ON mode *2	Auto

*1: When the manual REC is selected for the Intake, the manual REC is maintained.
*2: The ON mode is enabled only when the fun is turned on, and also the compressor is turned on because of the given outside air temperature level.

Indication

- The AUTO LED is turned off.
- The DEF LED and the A/C LED are turned on.
- The indication of the intake LED depends on the system condition.

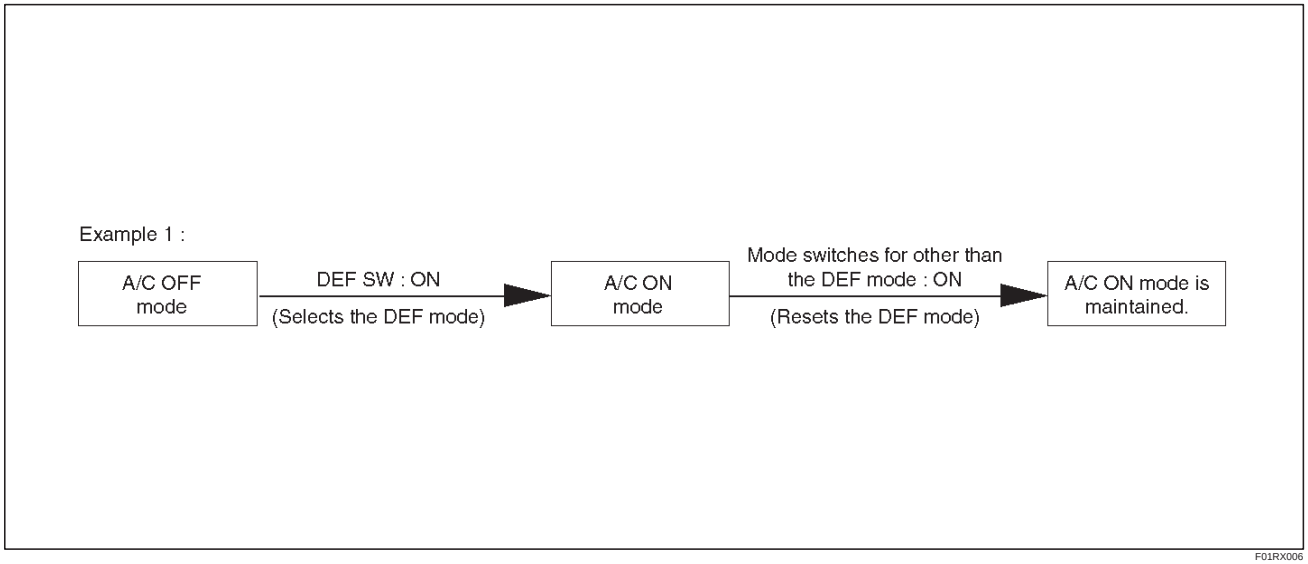

Intake Switch

Pressing this switch sequentially selects a different intake port in the following order.

Downloaded from www.Manualslib.com manuals search engine

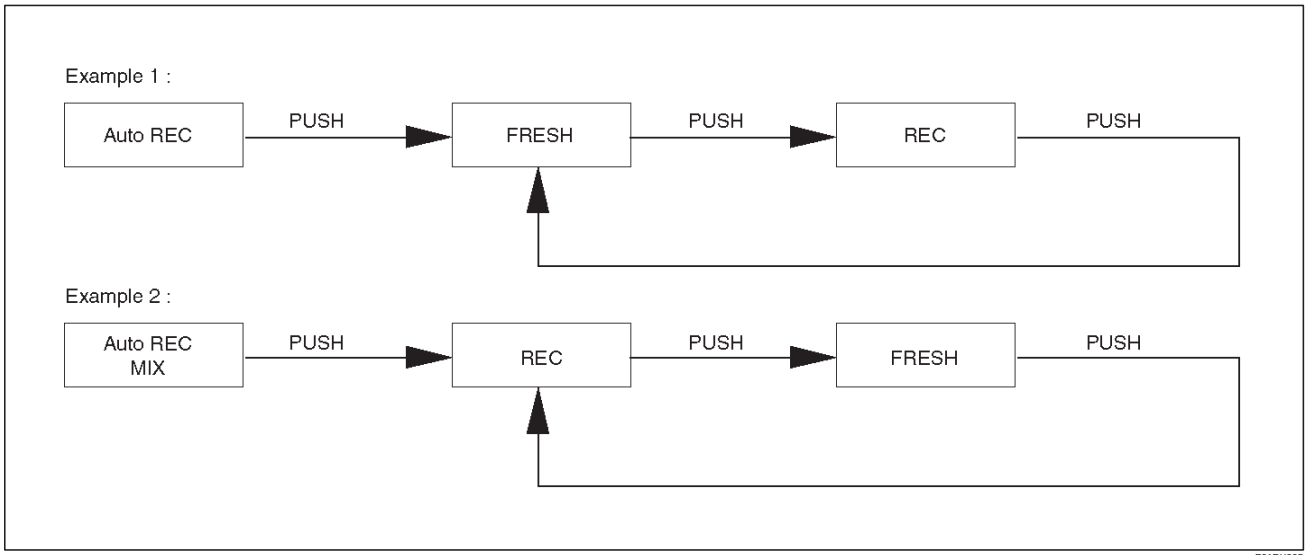

F01RX005

Indication

- The Auto LED maintains unaffected.
- Currently selected intake port is indicated.

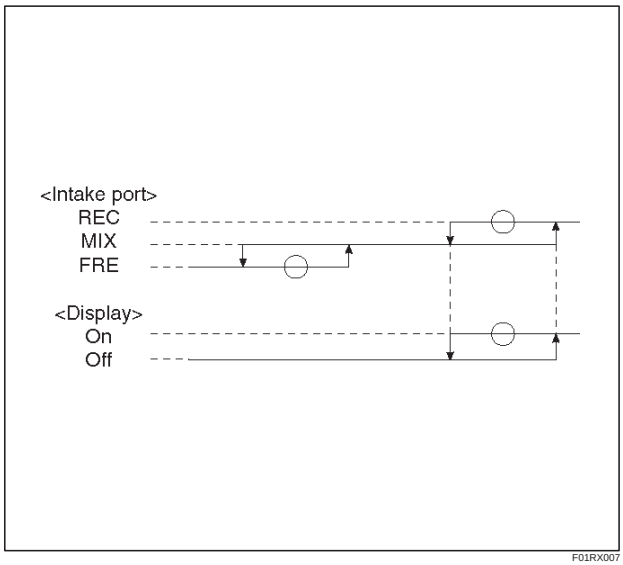

F01RX007

Fan Switch

1. Sets the fan to the specified mode.
2. Even when the fan switch is turned off, status display for the Mode, Intake is maintained.

Temperature Control Knob

1. This knob is operable only when the fan is turned on. It may be used for the MAX control of each block except the fan.
2. When the manual mode is selected for the fan control, this manual mode is maintained.

MAX Control

	Mix	Fan	Mode	Intake	A/C
MAX/COOL	Full cool	MAX/HI	VENT	REC*1	ON mode*2
MAX/HEAT	Full hot	AUTO/HI	FOOT*3	FRESH	Current status is maintained

*1: In the A/C: OFF mode, FRESH shall be selected.

*2: The ON mode is available only when ON is selected for the fan as well as for the cold outside air ON/OFF selection.

*3: When the MAX control is selected from the DEF mode, this DEF mode shall be maintained.

Downloaded from www.Manualslib.com manuals search engine

Indication

- As long as the MAX control is selected, the immediately preceding indication shall be maintained for the AUTO.
- Status display is provided for others.

Air Conditioning Switch

Pressing this switch turns on or off the A/C (air conditioning) control. (The compressor remains turned off if the fan is turned off and also the compressor has been turned off because of the given outside air temperature level.)

Indication

1. The A/C LED remains turned on even if the compressor has been turned off because of the given outside air temperature level. In this case, however, the AUTO or DEF switch must be turned on and the A/C ON mode must also be turned on (by the MAX/C mode).
2. Pressing the A/C switch from the above state (1) turns off the A/C LED.

Overview of Construction, Movement and Control of Major Parts of Automatic Air Conditioner System

Automatic Heater/Air Conditioner Control Unit

Equipped with the built-in micro-computer, this control unit operates on signals from sensors and input signals from switches to offer total control of the blower fan, and actuators used for the mode door, intake door and air mix door.
Its self-diagnosis function enables quicker access to a failed part and its more accurate troubleshooting.

In Car Sensor

It is a sensor used for detecting room temperature of a vehicle. This sensor converts a given room temperature into a resistance value before entering the data to the automatic heater/air conditioner control unit.
This in car sensor unites the power driven aspirator and the motor fan so that a small amount of room air may be constantly fed to the sensor.
This sensor is provided on the control panel.

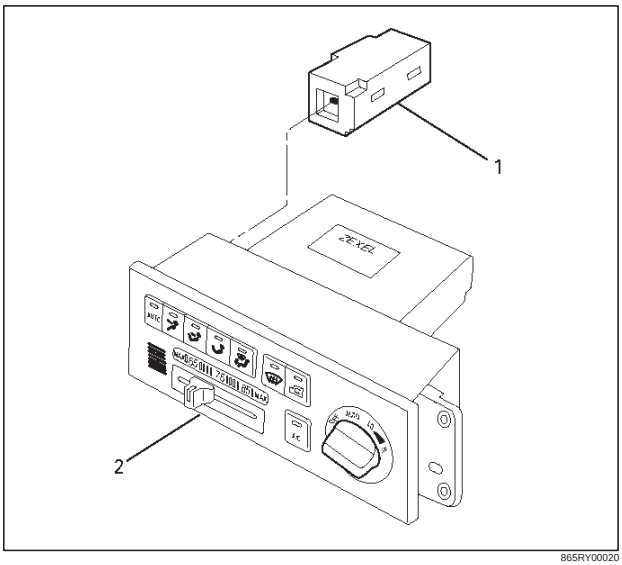

865RY00020

Legend

(1) In Car Sensor
(2) Automatic Air Conditioner Control Unit

Ambient Sensor

This sensor is used for detecting temperature outside the vehicle. It converts a given outside air temperature into a resistance value before entering the data to the automatic heater/air conditioner control unit.
Thermal effects from the condenser and radiator during idling after a run can be measured and offset the automatic amplifier.
This sensor is provided on the side plate situated at upper right side of the condenser.

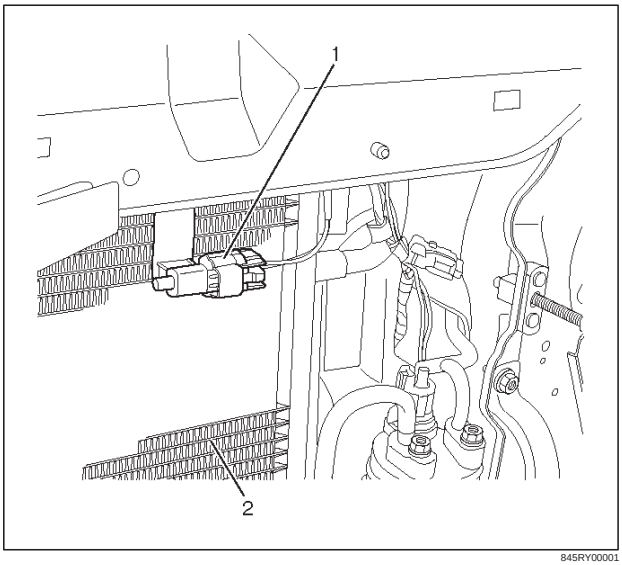

845RY00001

Legend

(1) Ambient Sensor
(2) Condenser Assembly

Downloaded from www.Manualslib.com manuals search engine

Duct Sensor

The duct sensor is the sensor to detect temperature change of the side of evaporator blower coming by fresh recirculation of intake door or “on” “off” of compressor.
The temperature is converted to resistant rate.
And it works as thermostat to control to prevent freezing of evaporator.
This sensor is installed in the upper case of evaporator.

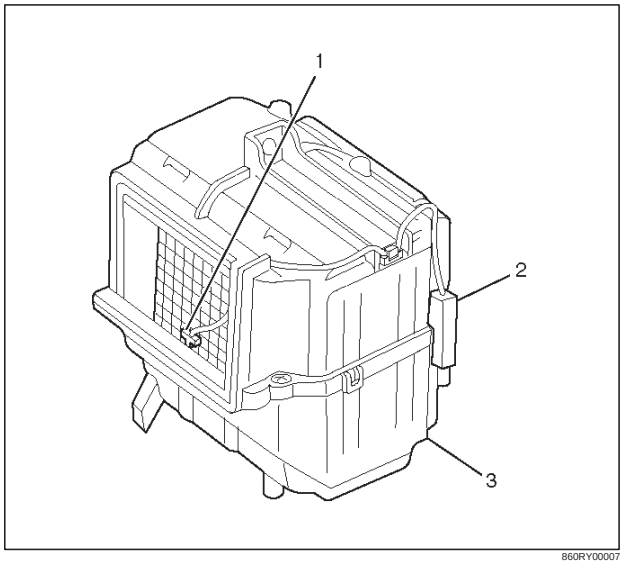

860RY00007

Legend

(1) Duct Sensor
(2) Electro Thermo
(3) Evaporator

Sun Sensor

It is a photodiode used for detecting quantity of solar radiation. This sensor converts the offset signal generated by changes in the interior temperature (which results from fluctuations in solar radiation) into photoelectric current to enter into the automatic heater/air conditioner control unit.
This sensor is provided at top of the defroster grill.

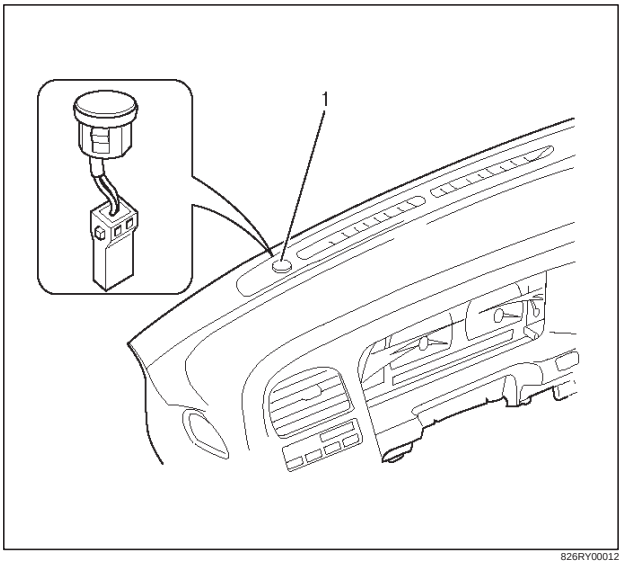

826RY00012

Legend

(1) Sun Sensor

Power Transistor

Receiving base current from the automatic heater/air conditioner control unit, the power transistor implements stage–less speed change of the blower fan motor. This transistor is provided on the evaporator.

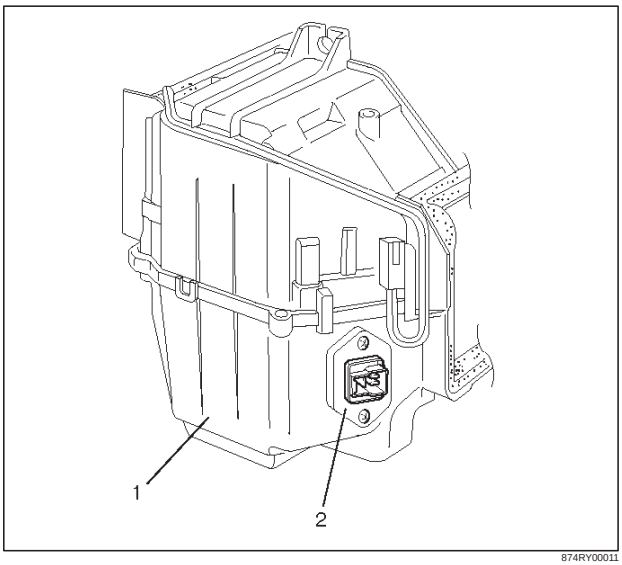

874RY00011

Legend

(1) Evaporator Assembly
(2) Power Transistor

Downloaded from www.Manualslib.com manuals search engine

Max Hi Relay

This relay turned on or off by the signal from the automatic heater/air conditioner control unit. As the Max Hi relay is turned on, supply voltage is directly fed to the blower fan motor to select the Max Hi mode.

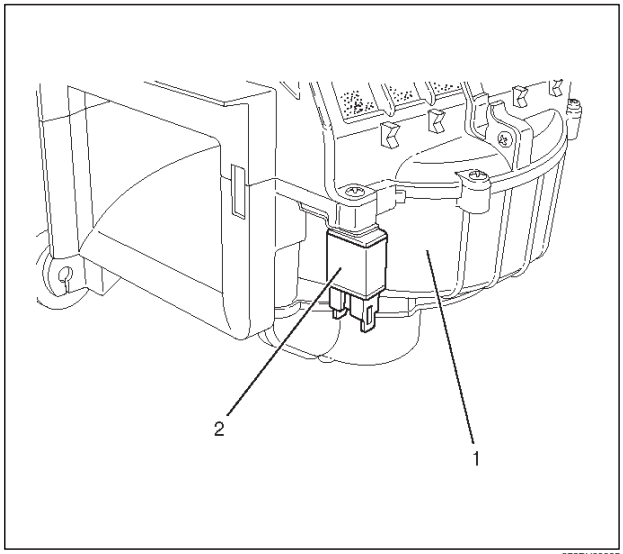

873RY00005

Legend

(1) Blower Unit
(2) Max High Relay

Actuator

The actuators are power driven type containing a small motor. Receiving output current from the automatic heater/air conditioner control unit, actuators drive the heater and blower unit mode doors.

Actuators consist of the mode actuator used for switching the mode (blow port selection), the mix actuator used for changing aperture of the air mix door, the intake actuator used for switching the intake mode(fresh air/interior air) and the cold air bypassing actuator.

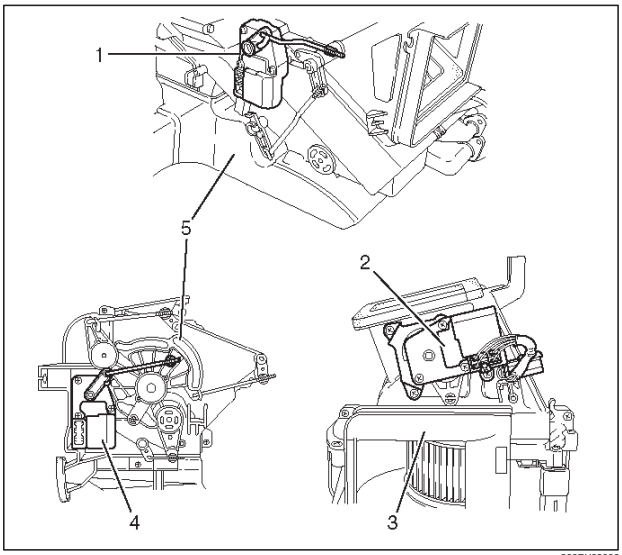

860RY00006

Legend

(1) Mix Actuator
(2) Intake Actuator
(3) Blower Unit
(4) Mode Actuator
(5) Heater Unit

Downloaded from www.Manualslib.com manuals search engine

The actuator changes the motor speed using the gear and drives each door rotating the output axis united with the sliding contact.

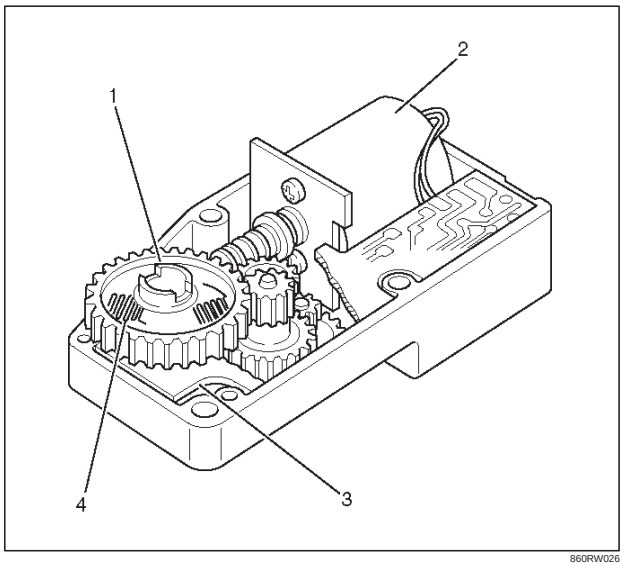

860RW026

Legend

(1) Output Axis
(2) Motor
(3) Printed Circuit Board
(4) Sliding Contact

The mode and mix actuators are common actuators with the built–in potentiometer. For the intake actuator, the contact switch type is selected.
The potentiometer is a register assembled to the printed circuit board of the mix and mode actuators. It detects the air mix door position specified by rotation of the output axis as a ratio of the variable terminal (VM) voltage against the reference voltage (VDD: 5V), then signals the value to the automatic heater/air conditioner control unit.

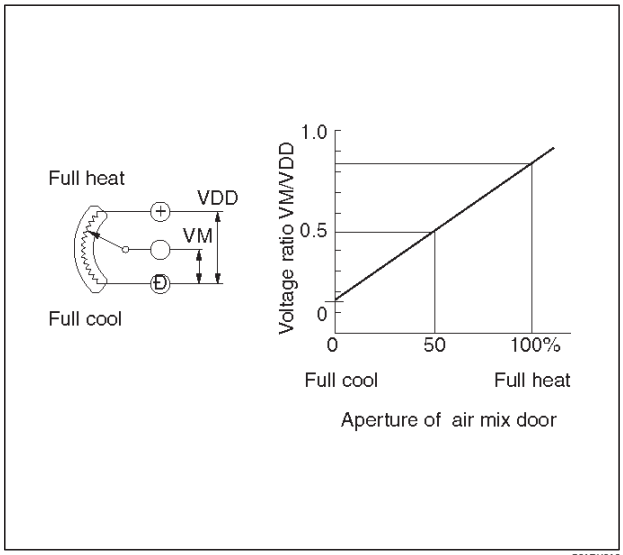

C01RX016

Movement of Mix Actuator

Position of the air mix door is determined by the controller on the automatic heater/air conditioner control unit.
As the heat or cool side of the controller is grounded, the transistor on the driver is activated and, thus, the motor rotation is turned on. The sliding contact connected to the motor sends the position detection signal from the potentiometer to the automatic heater/air conditioner control unit. As the set temperature and interior temperature are balanced, the controller returns to the neutral and the motor rotation is stopped.

I-45		Rotation direction	Remarks
(+) side	(-) side		
8	6	Clockwise	Full heat side
6	8	Counter clockwise	Full cool side

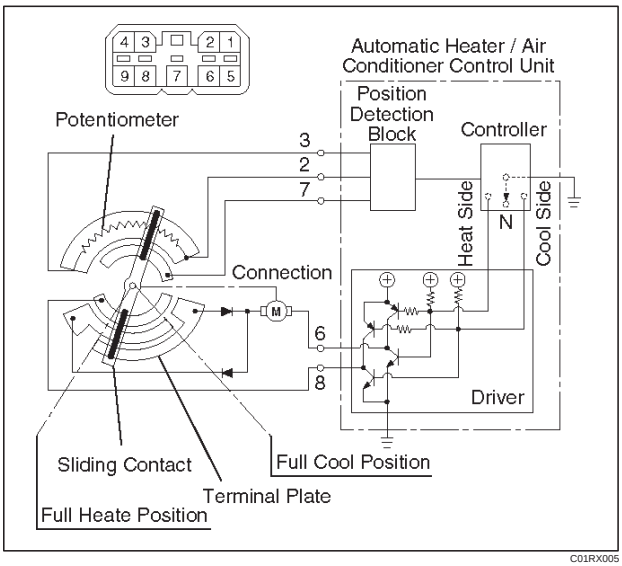

C01RX005

Downloaded from www.Manualslib.com manuals search engine

Movement of Mode Actuator

As target position of the mode door is decided on the controller of the control unit, the control unit reads the position detection signal from the actuator to select the clockwise or counter clockwise motor rotation direction.
Grounding the controller VENT or DEF side after the direction selection activates the transistor on the driver, thus turning on the motor rotation. Accompanying the motor rotation, the sliding contact rotates, too. When the target position is reached, the controller on the control unit returns to the neutral and the motor stops.

Conduction pin		Rotation direction	Remarks
(+) side	(-) side		
5	1	Clockwise	VENT to DEF direction
1	5	Counter clockwise	DEF to VENT direction

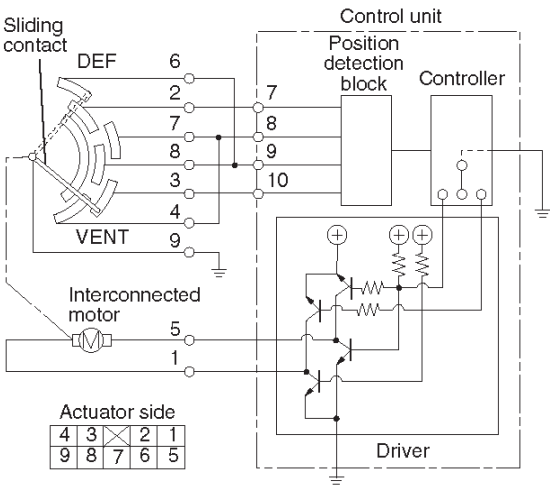

	7	8	9	10
VENT	H	L	H	L
Mid point between VENT - B/L	H	H	H	L
B/L	H	H	L	L
Mid point between B/L - FOOT	H	H	L	H
FOOT	H	L	L	H
Mid point between FOOT - D/F	H	L	H	H
D/F	L	L	H	H
Mid point between D/F - DEF	L	H	H	H
DEF	L	H	L	H

C01RX017

Movement of Intake Actuator

The controller on the automatic heater/air conditioner control unit selects an intake mode to be used.
As the Terminal No.5 I-49 is grounded via the sliding contact on the terminal plate, the transistor on the driver is activated, thus turning on the motor rotation. Then, accompanying move of the motor, the sliding contact rotates until grounding of the Terminal No.5 I-49 is removed, thus stopping the motor.

Grounding terminal	Rotation direction	Remarks
No.5 I-49	Clockwise	RE-CIRCULATION→MIX→FRESH

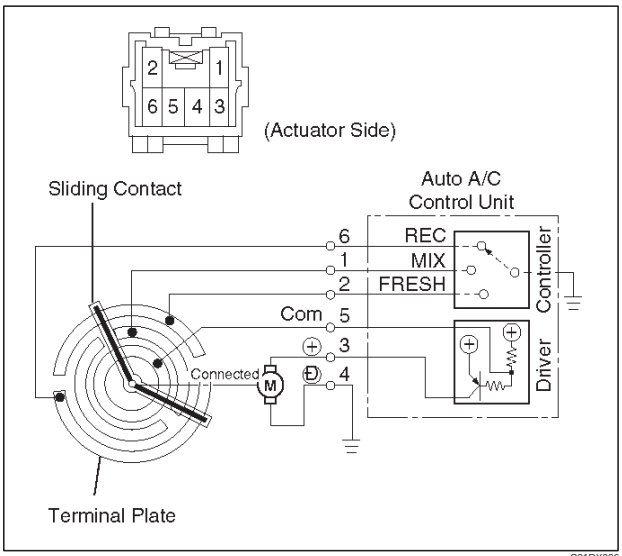

C01RX006

Overview of Automatic Control of Automatic Air Conditioner

The full automatic heater and air conditioner on this vehicle has the following features:

- Interior temperature control.
- Air flow control.
- Mode (blow port) control.
- Intake (switching between fresh air and interior air) control.
- Heater start timing control.
- Cooler start timing control.
- Evaporator anti-freeze control.

Downloaded from www.Manualslib.com manuals search engine

Interior Temperature Control

The automatic heater/air conditioner control unit operates on the setup temperature signal from the temperature control switch and other sensor signals to derive the total signal. Then, the control unit compares this signal against the signal from the potentiometer to determine rotation direction of the mix actuator. The mix actuator moves the air mix door to the aperture specified by the total signal so that the specified interior temperature is achieved.

If the compressor is turned off in the A/C (air conditioning) mode, aperture of the air mix door is offset according to the outside air temperature or the specified interior temperature. This function removes the difference in the blowing temperature in this state and that of when the compressor is turned on.

When FH or FC is selected for the setup temperature, the air mix door is accordingly fixed to the Full Heat or Full Cool mode.

When the VENT mode is selected, aperture of the air mix door is controlled so that excessively heated air may not be blown from the VENT blow port.

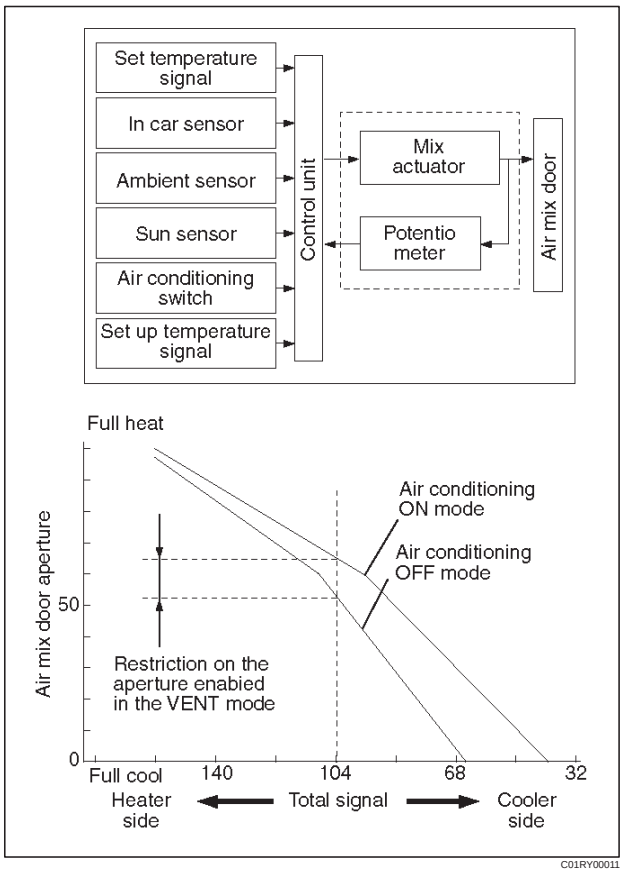

C01RY00011

Air Flow Control

In the Auto Mode

- The automatic heater/air conditioner control unit operates on the setup temperature signal and other sensor signals to derive the total signal. Then, the control unit adjusts base potential of the power transistor to match it to the voltage pattern of the target fan so that stage-less fan speed control can be achieved.

When solar radiation quantity is detected in the VENT or B/L mode, the control unit increases the minimum fan voltage to offset.

When FH or FC is selected from the temperature control switch, air flow is accordingly fixed to MAX HI or AUTO HI.

In the Manual Mode

- Air flow specified from the fan switch is entered to the automatic heater/air conditioner control unit as the manual signal. The signal modifies the air flow to the level specified from the fan switch so that the required fan voltage is attained.

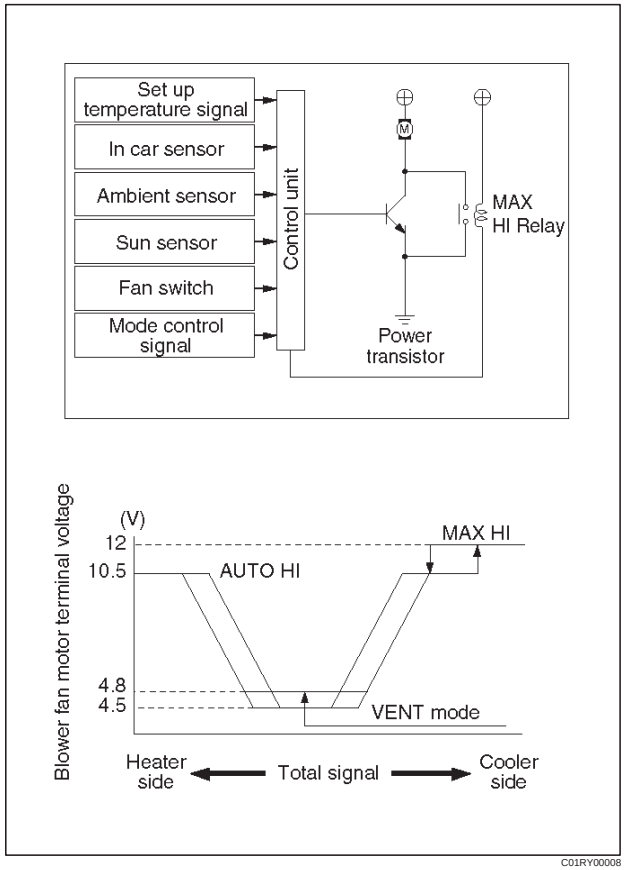

C01RY00008

Downloaded from www.Manualslib.com manuals search engine

Mode (Blow Port) Control

The automatic heater/air conditioner control unit operates on the setup temperature from the control switch, and temperature and solar radiation quantify from the sensors to determine the total mode control signal. According to the pattern specified by this signal, the control unit selects either one of the VENT, BI-LEVEL, FOOT or DEF/FOOT mode.

The mode actuator determines the rotation direction comparing the target position against the current position being determined by the position detection signal.

When FH or FC is selected for the temperature from the temperature control switch, mode is accordingly fixed to the VENT or FOOT.

- In the manual operation of the mode switch, you can select a desired blow port mode pressing the corresponding mode switch.
- Operating the DEF mode switch selects the DEF for the blow port mode.

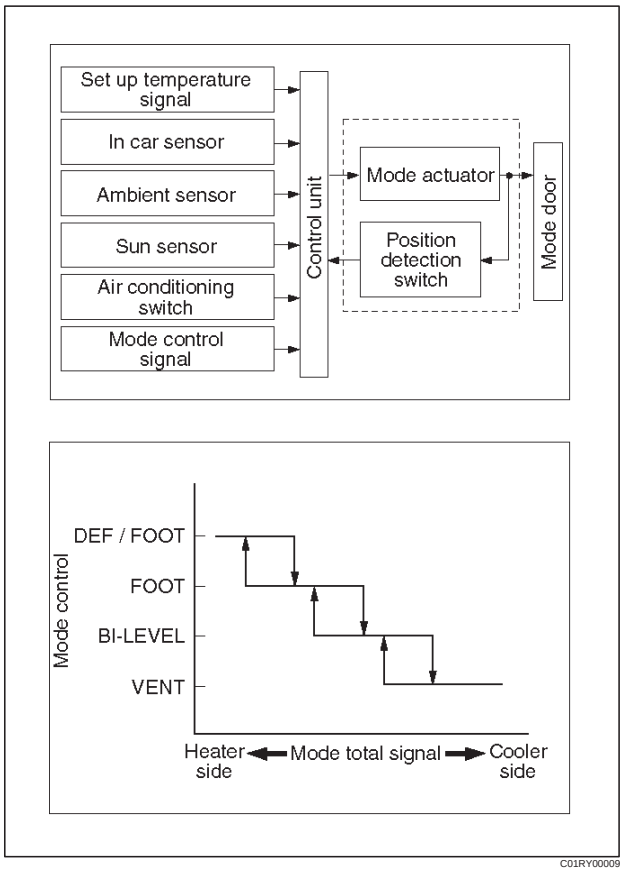

C01RY00009

Intake (Fresh air/interior air switching) Control

In the Full Auto mode, the automatic heater/air conditioner control unit operates on the setup temperature signal and other sensor input signals to derive the total signal. According to the pattern specified by this signal, the control unit provides the intake control. When the fan is turned off or the A/C (air conditioning) is turned off, the intake is fixed to the FRESH mode.

When FC or FH is selected from the control switch, the intake mode is accordingly fixed to the RECIRC or FRESH.

In the Manual Operation

- Pressing the FRESH (fresh air intake) or the RECIRC (room air circulation) accordingly selects the FRESH or RECIRC mode.

When the DEF Mode Switch is depressed

- The intake mode is fixed to the FRESH. When the MANU REC is selected, however, the mode is fixed the RECIRC.

When the Mode Switch is depressed

- If the automatic intake control is selected, the intake is fixed to the currently selected mode.

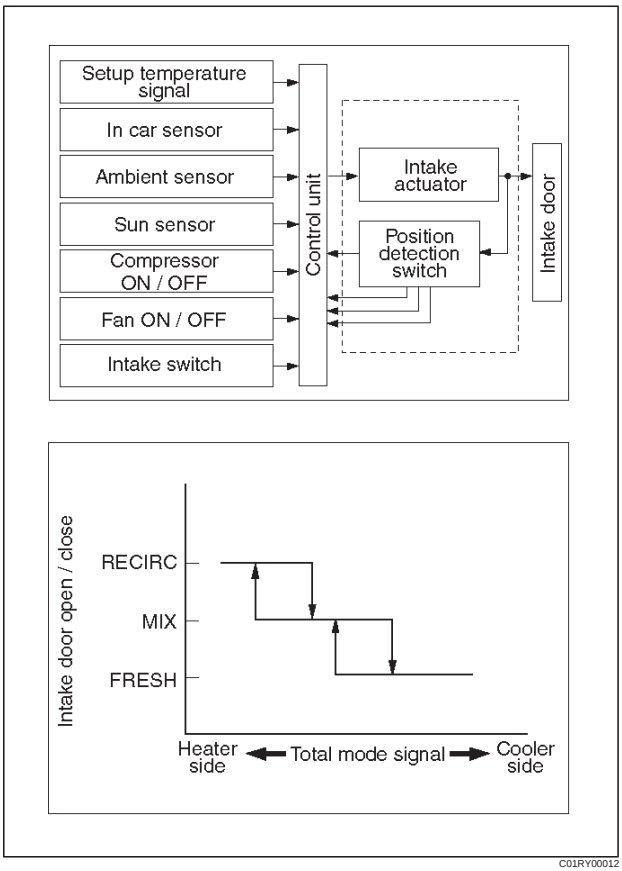

C01RY00012

Downloaded from www.Manualslib.com manuals search engine

Compressor Control

In the automatic control mode, the automatic heater/air conditioner control unit turns on or off the compressor with the evaporator anti–freeze mechanism using the evaporation sensor. And, when outside air is detected to be low through the outside air temperature sensor signal, the control unit turns off the compressor using the compressor control function.

Manual Control

- In the automatic control mode, pressing the A/C (air conditioning) switch turns off the compressor.
- Pressing the DEF mode switch automatically turns on the compressor.

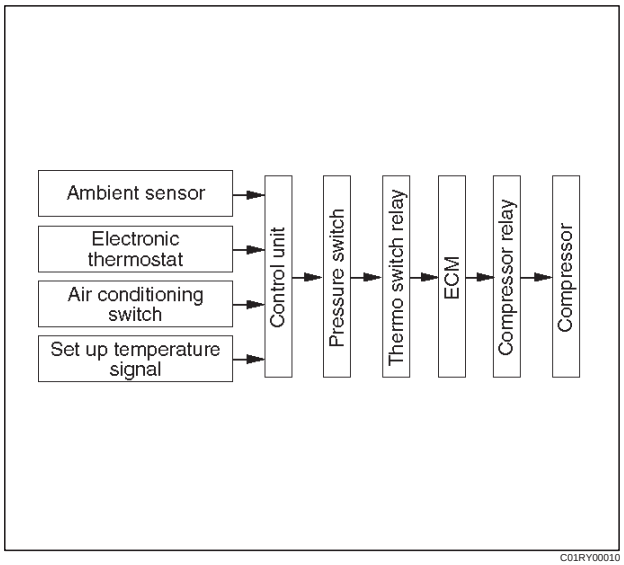

C01RY00010

Heating Start Timing Control

When the automatic heater/air conditioner is started, heating is turned on under following conditions.

- The detected temperature of thermo unit is 136˚F or less.
- The temperature setting signal and the total signal by each sensor meet the condition of heating.

When the detected temperature by the coolant temperature sensor is 136˚F or less, the blower fan motor is set to work at low speed and the “DEF” mode is selected.

When the detected temperature by the coolant temperature sensor is 77˚F or more, the blow mode changes automatic control. And the blower fan speed is controlled to be lineally up from “LO” to “MAX HI”.

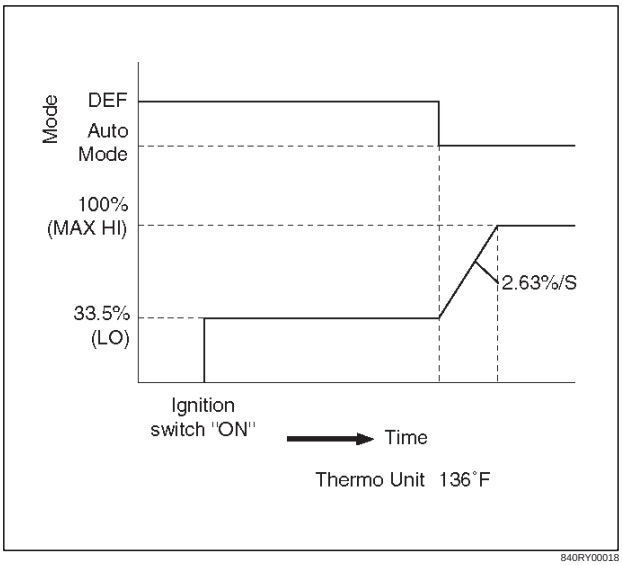

840RY00018

Cooling Start Timing Control

When the automatic heater/air conditioner is started, cooling is turned on under following conditions.

- The in car sensor is 86˚F or more.
- The temperature setting signal and the signals from each sensor meet the specified condition.

The blower fan speed is set to “LO” for maximum 7 seconds when cooling start conditions meet, and then, is controlled to be lineally up to “MAX HI” by 5.32%/S.

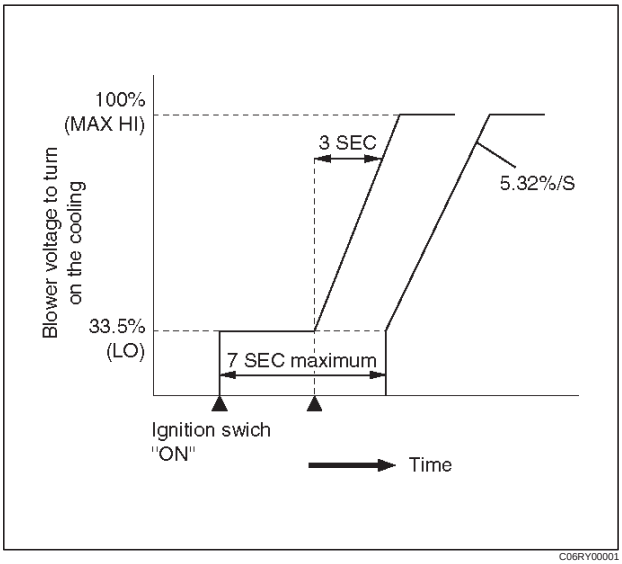

C06RY00001

Downloaded from www.Manualslib.com manuals search engine

Troubleshooting

Troubleshooting, Its Overview and Procedures

The full automatic heater and air conditioner equips with the “Self-Diagnosis Function” to check its major components.
This function makes access to the sensors, actuators and blower fan motor system easier when checking them up and, when a failed part is located, this function restores its original performance.

When implementing the troubleshooting, this self-diagnosis function narrows the range to be searched at the first step, then check relevant parts one by one according to the “Checking Procedures by Failed Location”. As for a location this function is unappreciable, the system accurately determines characteristics of a given trouble and checks relevant parts according to the “Checking Procedures by Failed Location”.
The following illustrates basic troubleshooting flow.

Basic Troubleshooting Flow

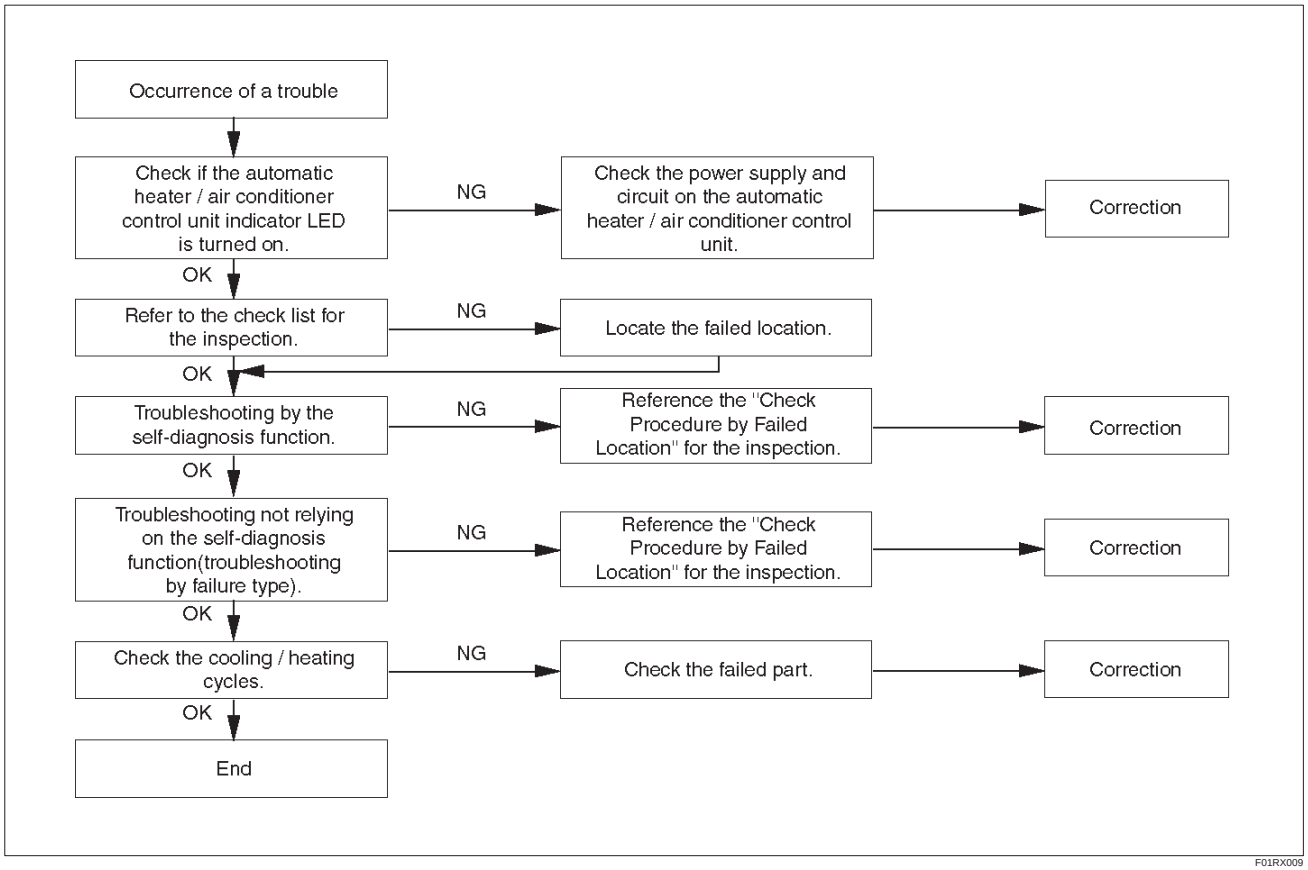

F01RX009

Downloaded from www.Manualslib.com manuals search engine

Auto Air Conditioner Control Unit Power Supply Diagnosis

This check is required because a trouble on the auto amplifier (control unit) power supply circuit or grounding circuit prevents accurate troubleshooting.

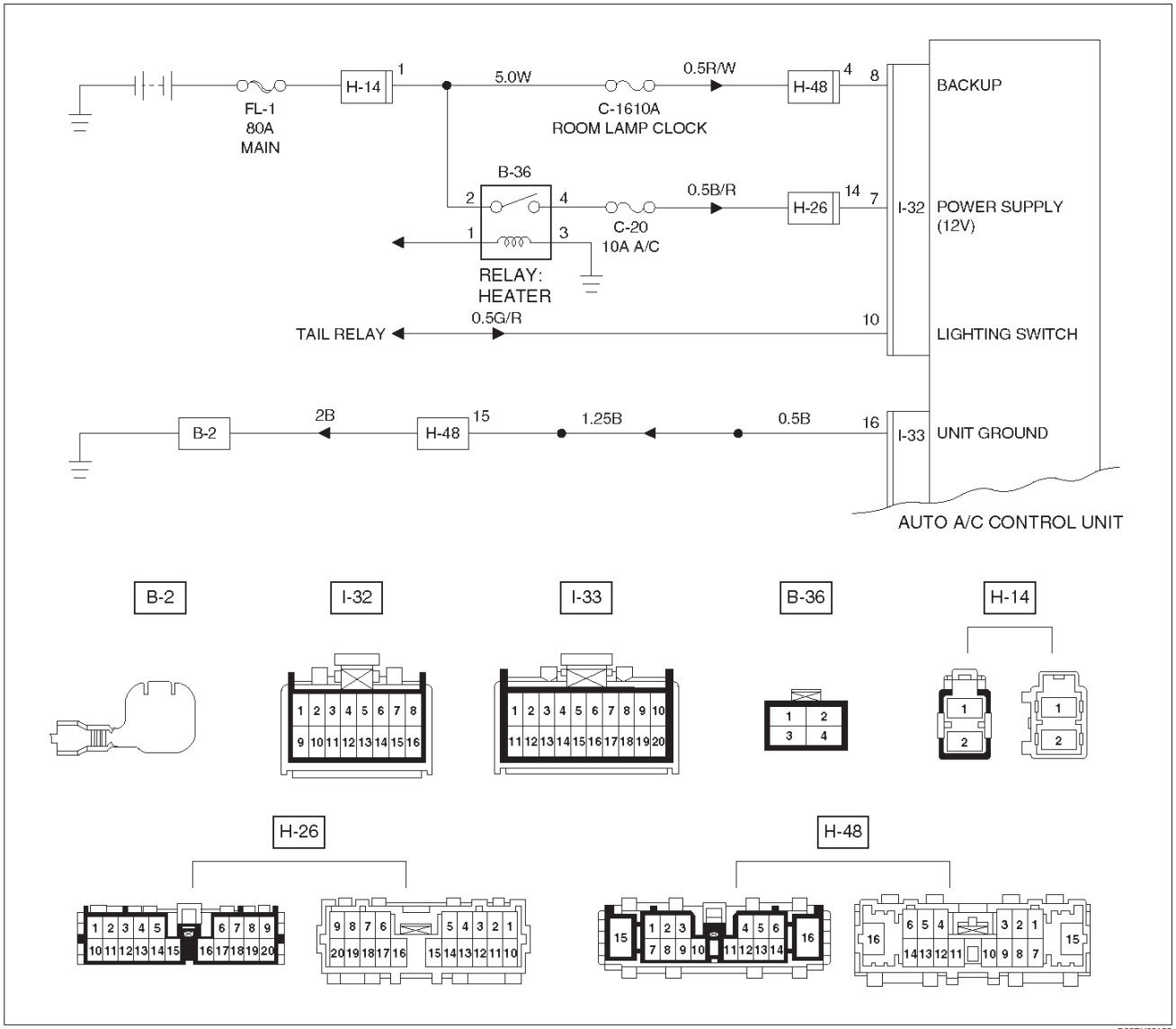

Condition	Possible cause	Correction
Power source does not supply to auto air conditioner control unit.	—	Refer to Chart A

Downloaded from www.Manualslib.com manuals search engine

Chart “A”: Check of Auto Amplifier Power Supply System

Step	Action	Value(s)	Yes	No
1	Is the fuse C–16 normal?	—	Go to Step 2	Replace the fuse
2	Is the fuse C–20 normal?	—	Go to Step 3	Replace the fuse
3	Disconnect the auto A/C control unit connector I–32. Is the battery voltage applied between the harness side connector terminal No.I32–8 and the ground?	Approx. 12V	Go to Step 5	Go to Step 4
4	Repair an open circuit between the fuse C–16 and terminal No.I32–8. Is the action complete?	—	Go to Step 4	—
5	Is there continuity between the harness side connector terminal No.I33–16 and the ground?	—	Go to Step 7	Go to Step 6
6	Repair an open circuit between terminal No.I33–16 and the ground No.B–2. Is the action complete?	—	Go to Step 5	—
7	Turn the lighting switch on. Is the battery voltage applied between the harness side connector terminal No.I32–10 and the ground?	Approx. 12V	Go to Step 9	Go to Step 8
8	Repair an open circuit between the lighting switch and terminal No.I32–10. Is the action complete?	—	Go to Step 7	—
9	Turn the starter switch on. Is the battery voltage applied between the harness side connector terminal No.I32–7 and the ground?	Approx. 12V	—	Go to Step 10
10	Repair an open circuit between the fuse C–20 and terminal No.I32–7. Is the action complete?	—	Verify repair	—

Downloaded from www.Manualslib.com manuals search engine

Performance and Movement checklist for Automatic Air Conditioner Related Parts

Start the engine, and when the engine coolant reached 122˚F check performance and movement of the related parts according the following checklist.

Performance Check Using the Manual Switch

No.	Item	Checking Approach		Acceptance criteria
		Condition	Operation	
1	Blowing temperature (check movement of air mix door)	Auto switch must be turned on(FAN–AUTOMODE –AUTO)	1. Select FC for the setup temperature. 2. Select FH for the setup temperature. → Then, select the MAX Control.	1. Cold air shall be blown out. 2. Hot air shall be blown out.
2	Airflow volume(check movement of the mode door)	Set temperature to 77˚F.	1. Turn the fan knob off. 2. Turn the fan knob from LOW to HI.	1. The fan shall be stopped, thus stopping air blow, too. 2. Airflow volume shall change from LOW to HI.
3	Blowing temperature(chec k movement of the mode door)	Set temperature to 77˚F.Set the fan knob to HI.	Push the mode switch to change the blow port mode sequentially from the VENT through BI-LEVEL, FOOT up to DEF.	LED corresponding to each mode shall be turned on and the blow port mode shall be switched smoothly.
4	The interior/outside air switching mode (check movement of intake door)	Set temperature to 77˚F.	Turn the LED off using the interior/outside air switch (this introduces the outside air intake mode). Then, the set fan knob to HI and press the interior/outside switch to turn on the LED.	The LED indication shall be switched from OFF to ON accompanying a change in air blowing sound.
5	Compressor	Set the temperature to 64.4˚F (FC). (Outside air temperature is 32˚F or above and interior temperature at ordinary temperature.)	Push the “OFF” switch. 1. Push the Auto switch. 2. Push the Air Conditioner switch.	1. As the fan knob is set to the Auto position, the A/C switch LED shall come on and the compressor shall be turned on. 2. As the A/C LED comes off, the compressor shall be turned off.

Downloaded from www.Manualslib.com manuals search engine

Check of Auto Function

No.	Item	Checking Approach		Acceptance criteria
		Condition	Operation	
1	Auto function	FAN KNOB “AUTO” MODE SW “AUTO”	Select FC for the temperature.	The LED shall come on. Cold air shall be blown out. The following LEDs shall come on: ● Blow port mode: ● Intake mode ● Fan speed: MAX Hi ● A/C
			Change the temperature gradually starting with 68˚F up to 86˚F.	**The following phenomena shall be recognized.** ● Temperature of blown air: Cold air is changed to hot air. ● Change in the air flow volume. ● The blow port mode LED indication changes in the following sequence: (VENT) (BI-LEVEL) (FOOT)
			Select FH for the temperature.	Cold air shall be blown out. The following LEDs shall come on. ● Blow port mode: ● Fan speed: Max Hi.

Downloaded from www.Manualslib.com manuals search engine

Troubleshooting With Self-Diagnosis Function

Overview of Self-Diagnosis Function

The self-diagnosis is implemented in 3 steps for each target. For detail of check procedure contained in each step, refer to the relevant section of “Check Procedure by Failed Location” listed in the Self–Diagnosis Operation Procedure.

For turning on the self-diagnosis function and switching of the check step, refer to the flow chart given below. You can reset the self–diagnosis function by turning the ignition switch off or turning the DEF switch on for 5 seconds.

Self-Diagnosis Operation Procedure

Step	Action	Value(s)	Yes	No
1	1. Set the IG to the OFF position. 2. Apply 60W bulb light to the sun sensor. 3. Set the temperature setting lever on the automatic heater/air conditioner panel to the center position (77˚F). 4. Set the fan switch on the same panel to the Auto position. Is the action complete?	—	Go to Step 2	—
2	While pushing both the Auto switch and the DEF switch on the automatic heater/air conditioner panel, start the engine. Is the current trouble diagnosing function turned on approximately in 10 seconds?	—	Go to Step 3	—
3	Does the A/C LED flash every 0.5 second interval?	—	Go to Step 4	Refer to *1.
4	Push the A/C switch once. Does the A/C LED flash every 0.5 second interval?	—	Go to Step 5	Refer to *2.
5	Refer to *3 chart “Check of Output Equipment”. Does each output equipment function normally according to operation of the temperature setting level?	—	Go to Step 6	Repair or replace the output equipment or repair the harness
6	Push the DEF switch for 5 seconds consecutively or turn on and off the IG. Is the action complete?	—	Go to Step 1	—

Downloaded from www.Manualslib.com manuals search engine

*1Displaying the Current Trouble Diagnosing Table

Start the engine while holding down both the Auto switch and the DEF switch on the control panel, and the table will appear in approximately 10 seconds to the indicator lamp (LED) of the air conditioning switch. Result of the diagnosis along the following 9 items will be shown one by one in 0.5 second interval irrespective of presence or absence of a trouble for a given item. When the display 9 items is completed, it is repeated with 3 seconds of interval in between. A failed item is indicated by flashing of the LED that is repeated 3 times within 0.5 seconds. If a trouble is indicated, you can locate the failed section by knowing when in the total sequence it has been displayed.

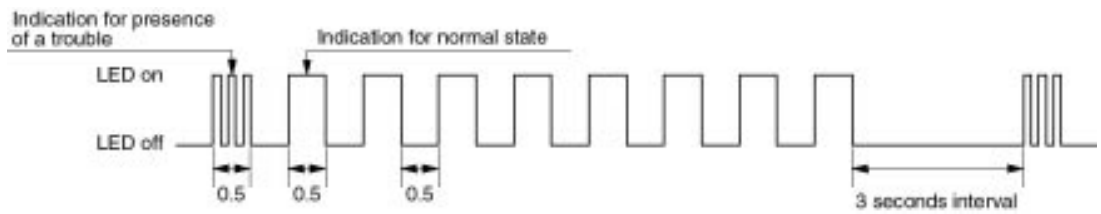

F01RX010

Item for Current Trouble Diagnosis

Display pattern	Failed part
ON / OFF	Normal pattern
	In car sensor
	Ambient sensor
	Sun sensor (Note 1)
	Duct sensor
	Temperature control lever (Note 2)
	Fan switch (Note 3)
	Mix actuator
	Mode (blow port) control
	Intake (fresh air/interior air switching) control

F01RY00008

Downloaded from www.Manualslib.com manuals search engine

As shown above, display of result along nine items is repeated with 3-second interval in between.
Note 1: When checking the sun sensor, apply sufficient light using a 60W bulb. Otherwise, it can be diagnosed as failed.
Note 2: If the temperature setting lever is set on both ends (one set to 64.4˚F, blue scale = Full cool and the other to 87.8˚F, red scale = Full hot), they can be diagnosed as failed.
Note 3: Likewise, the fan switch can be diagnosed as failed if set on both ends.

*2Displaying the Past Trouble Diagnosing Table

The past trouble diagnosis displays only the items on which trouble has recurred 16 times in the past.
If you press the air conditioning switch once while the current trouble diagnosis is taking place, display of the past trouble diagnosis will appear on the indicator lamp (LED) of the air conditioning switch.
Results of the diagnosis along the following five items are displayed one by one in 0.5 second interval irrespective of presence or absence of a trouble. A failed item is indicated by flashing of the LED that is repeated 3 times within 0.5 seconds. You can locate the failed section by counting in what sequence it has been displayed.
Past trouble code can be cleared by disconnecting one of the following sources for at least thirty (30) seconds.

NOTE: To prevent system damage, the ignition key must be “OFF” when disconnecting or reconnecting battery power.

- The No.16 fuse (Room lamp, Clock)
- The negative battery cable. (Disconnecting the negative battery cable will result in the loss of other on-board memory data, such as preset radio tuning).

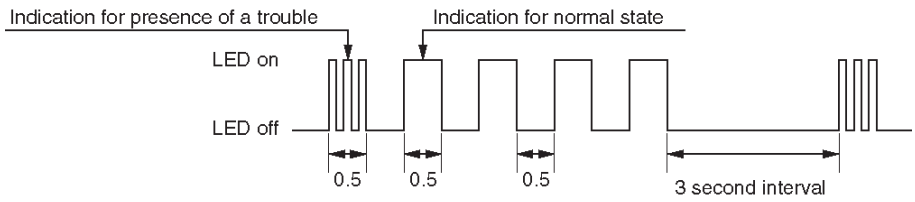

F01RX011

Display pattern	Failed part
ON / OFF	Normal pattern
	In car sensor
	Ambient sensor
	Sun sensor
	Duct sensor
	Mix actuator

F01RY00007

Downloaded from www.Manualslib.com manuals search engine

*3Check of Output Equipment

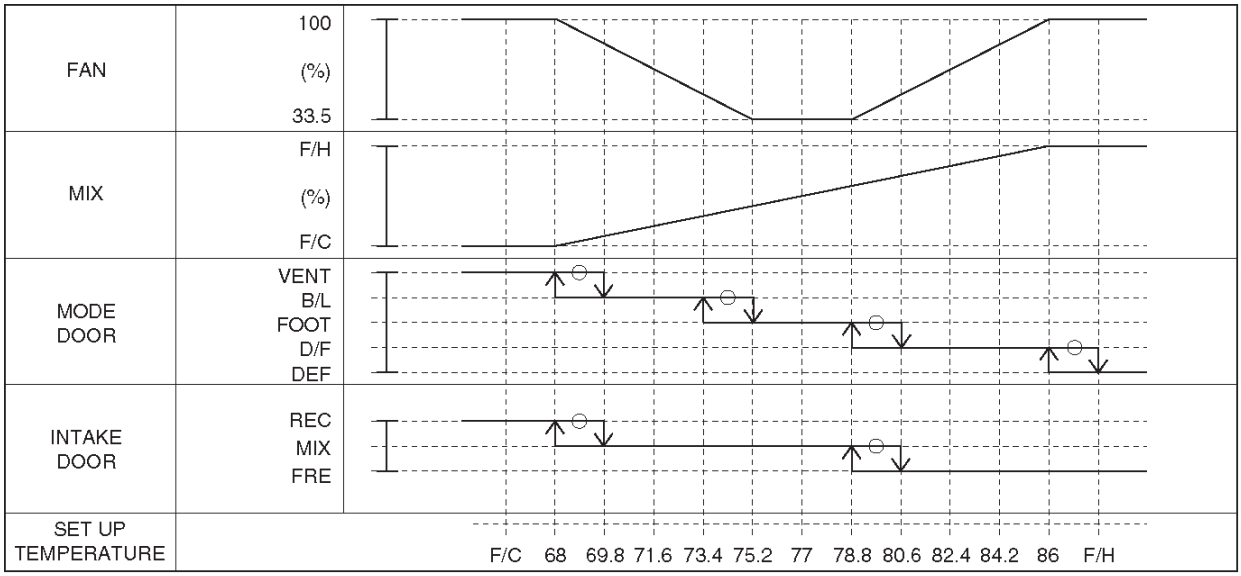

F01RY00004

Downloaded from www.Manualslib.com manuals search engine

Inspection By Failed Location

Inspection of the Sensors

When the self-diagnosis function has determined that trouble is present on the sensors, check them according to the following flow chart.

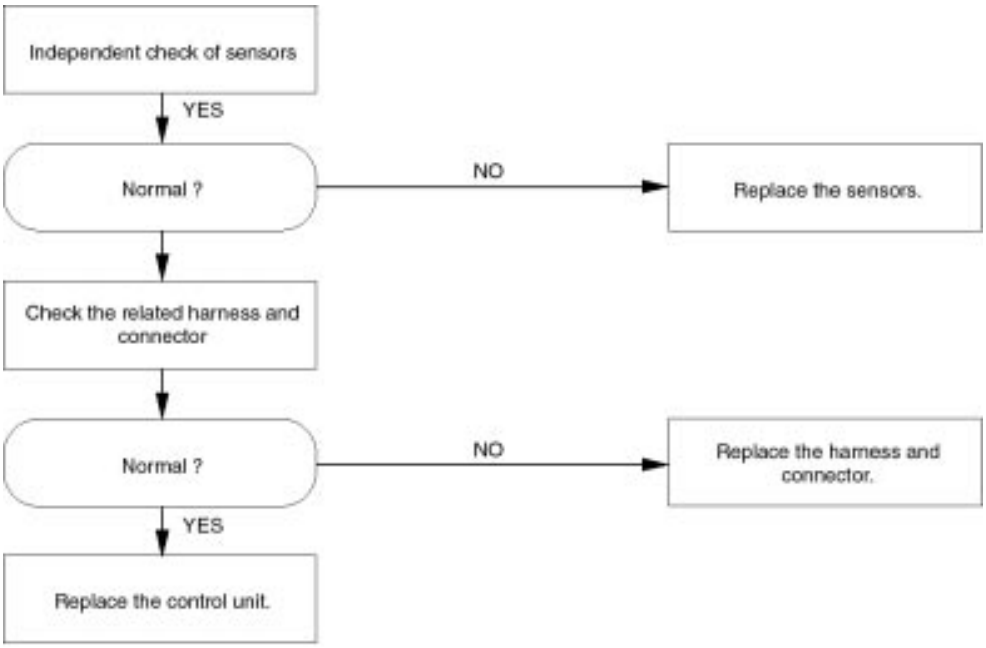

Sensors	Allowable range	Check method
In car sensor	Refer to the sensor resistance curve.	Chart 1
Ambient sensor	Refer to the sensor resistance curve.	Chart 2
Sun sensor	100 ohms maximum in forward and 0.02 mA minimum when exposed to 60W incandescent lamp.	Chart 3

F01RY00005

Downloaded from www.Manualslib.com manuals search engine

Chart 1: In Car Sensor

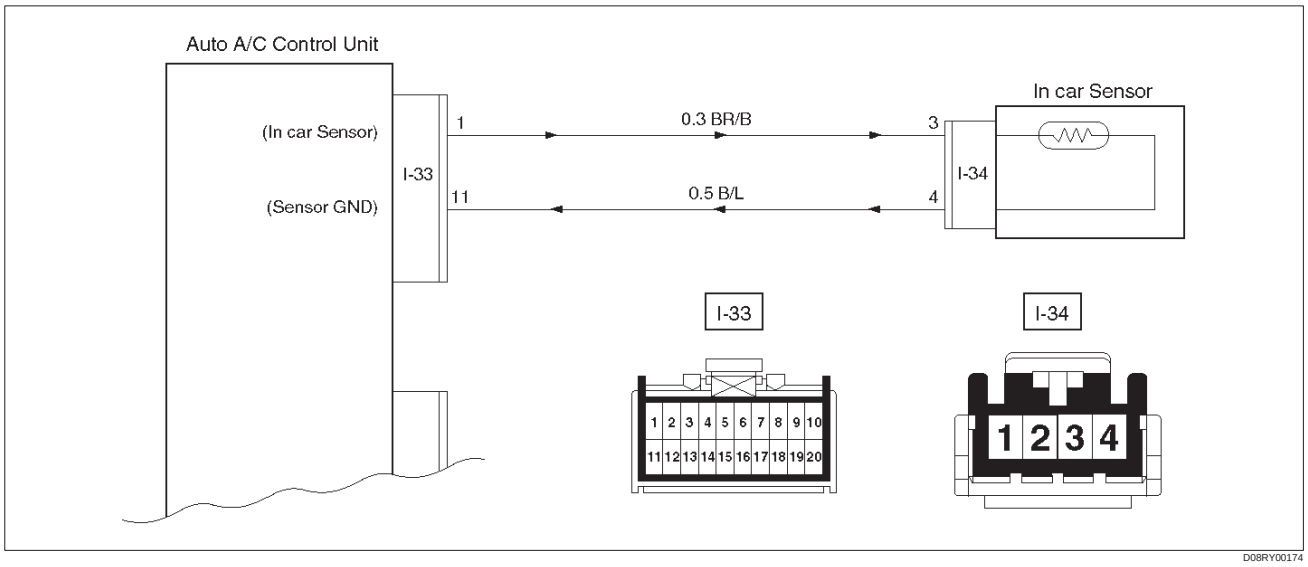

Step	Action	Value(s)	Yes	No
1	Disconnect the in car sensor connector. (No.I-34) Is performance of the sensor normal? (Refer to the later section on “Individual Inspection”)	—	Go to Step 2	Replace the in car sensor
2	Is there continuity between the harness side connector No.I33–1 and No.I34–3?	—	Go to Step 4	Go to Step 3
3	Repair an open circuit between terminal No.I33–1 and No.I34–3. Is the action complete?	—	Go to Step 2	—
4	Is there continuity between the harness side connector No.I33–11 and No.I34–4?	—	Go to Step 6	Go to Step 5
5	Replace the auto air conditioner control unit. Is the action complete?	—	Verify repair	—

Downloaded from www.Manualslib.com manuals search engine

Chart 2: Ambient Sensor

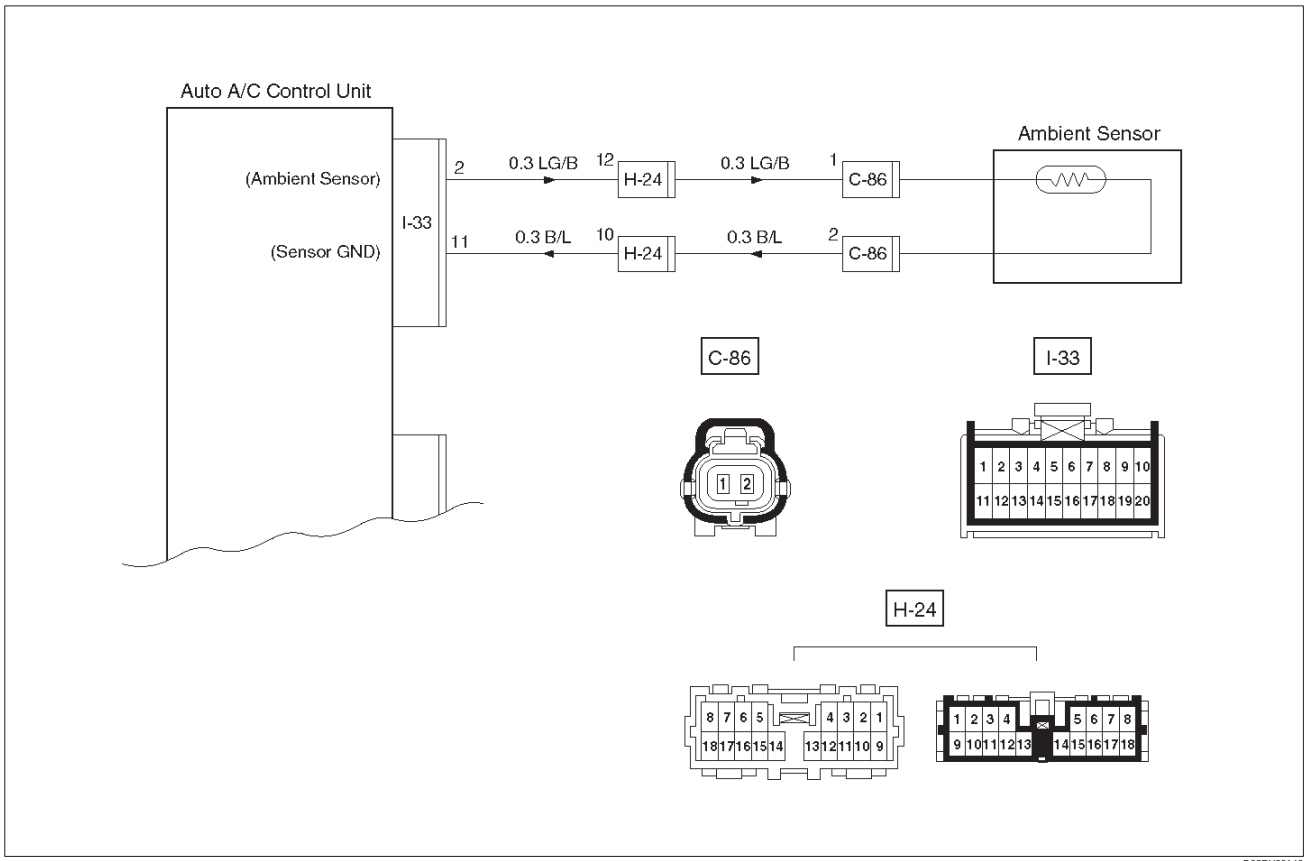

Step	Action	Value(s)	Yes	No
1	Disconnect ambient sensor connector. (No.C–86) Is performance of the ambient sensor normal? (Refer to the later section on “Individual inspection”)	—	Go to Step 2	Replace the ambient sensor
2	Connect the ambient sensor connector. Is resistance between the harness side connector No.I33–2 and No.I33–11 normal?	Refer to the later section on “Individual inspection”	Go to Step 4	Go to Step 3
3	Repair an open circuit between terminal No.I33–2 and No.C86–1 or No.I33–11 and No.C86–2. Is the action complete?	—	Verify repair	—
4	Replace the auto air conditioner control unit. Is the action complete?	—	Verify repair	—

Downloaded from www.Manualslib.com manuals search engine

Chart 3: Sun Sensor

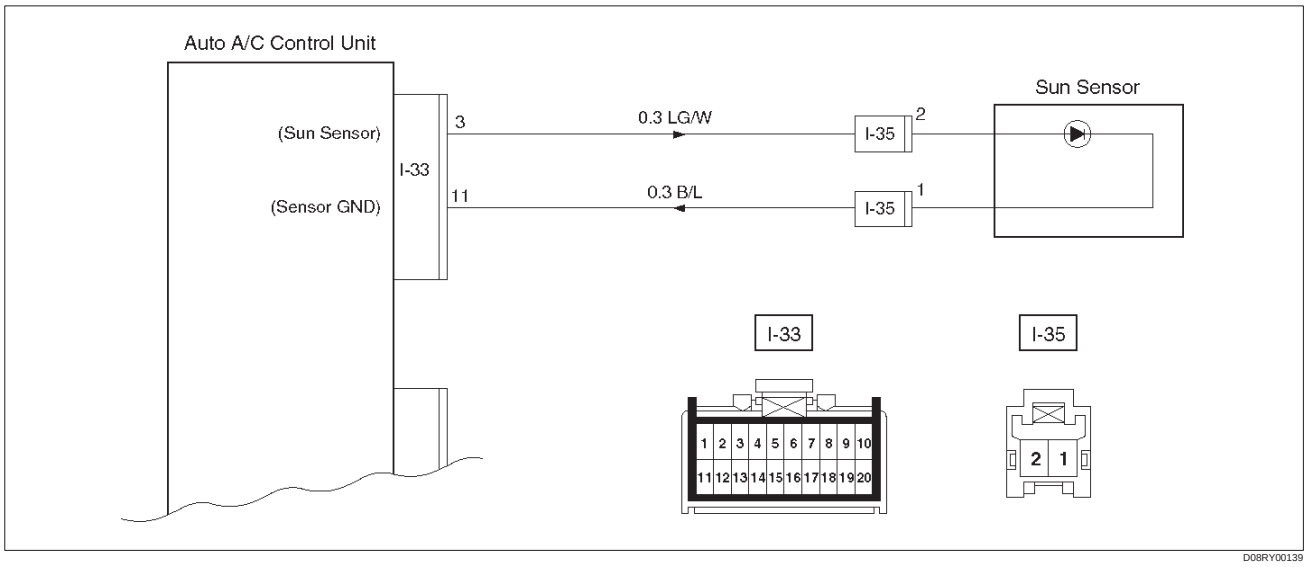

Step	Action	Value(s)	Yes	No
1	Disconnect the sun sensor connector. (No.I–35) Is performance of the sun sensor normal? (Refer to the later section on individual inspection)	—	Go to Step 2	Replace the sun sensor.
2	Is there continuity between the harness side connector terminal No.I33–3 and No.I35–2?	—	Go to Step 4	Go to Step 4
3	Repair an open circuit between terminal No.I33–3 and No.I35–2. Is the action complete?	—	Go to Step 2	—
4	Is there continuity between the harness side connector terminal No.I33–11 and No.I35–1?	—	Go to Step 6	Go to Step 5
5	Repair an open circuit between terminal No.I33–11 and I35–1. Is the action complete?	—	Go to Step 4	—
6	Replace the auto air conditioner control unit. Is the action complete?	—	Verify repair	—

Downloaded from www.Manualslib.com manuals search engine

Inspection of the Intake Actuator System

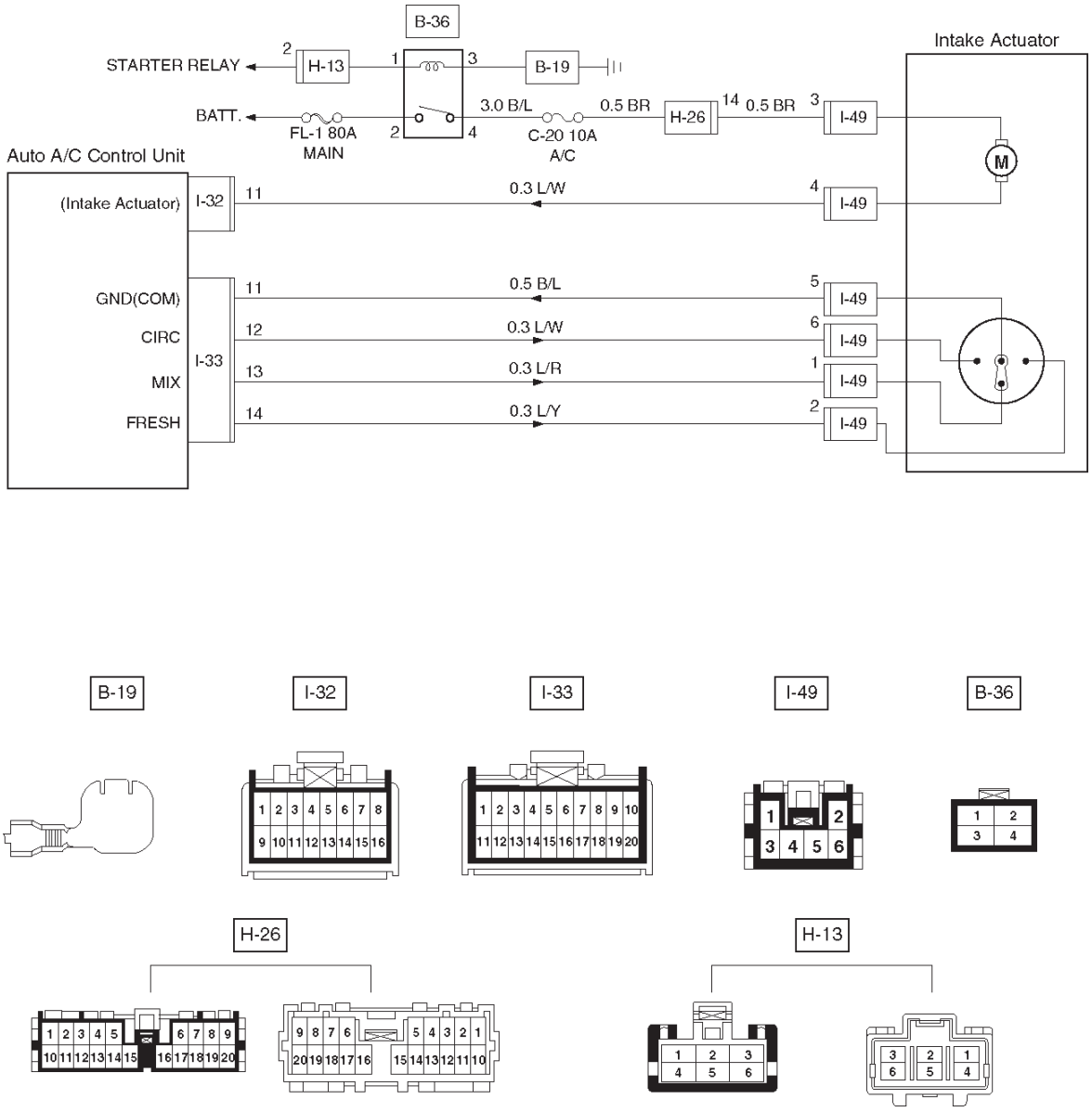

D08RY00142

Downloaded from www.Manualslib.com manuals search engine

Condition	Possible cause	Correction
Does not work at all	—	Refer to Chart A
Control failure	—	Refer to Chart B

Chart A: Does Not Work At All

Step	Action	Value(s)	Yes	No
1	Is the fuse FL–1 normal?	—	Go to Step 2	Replace the fuse
2	Is the fuse C–20 normal?	—	Go to Step 3	Replace the fuse
3	Is the relay B–36 normal?	—	Go to Step 4	Replace the relay
4	Turn on the ignition switch. (the engine is run.) Is the battery voltage applied between the harness side connector terminal No.I49–3 and ground?	Approx 12V	Go to Step 6	Go to Step 5
5	Repair an open circuit between terminal No.I49–3 and No.B36–4. Is the action complete?	—	Go to Step 4	—
6	Is the battery voltage applied between the harness side connector terminal No.I49–4 and ground?	Approx 12V	Go to Step 8	Go to Step 7
7	Replace the intake actuator motor. Is the action complete?	—	Go to Step 6	—
8	Is there continuity between the harness side connector terminal No.I32–11 and No.B49–4?	—	Go to Step 10	Go to Step 9
9	Repair an open circuit between No.I32–11 and I49–4. Is the action complete?	—	Verify repair	—
10	Replace the auto air conditioner control unit. Is the action complete?	—	Verify repair	—

Downloaded from www.Manualslib.com manuals search engine

Chart B: Failure on the Intake Control

Step	Action	Value(s)	Yes	No
1	Is the fuse No.C–20 normal?	—	Go to Step 2	Replace the fuse
2	Is the relay No.B–36 normal?	—	Go to Step 3	Replace the relay
3	Turn on the ignition switch. (the engine is run.) Is the intake actuator stopped?	—	Go to Step 5	Go to Step 4
4	Replace or repair the auto air conditioner control unit. Is the action complete?	—	Verify repair	—
5	Is there continuity between the harness side connector terminal No.I49–5 and No.I33–11?	—	Go to Step 7	Go to Step 6
6	Repair an open circuit between terminal No.I49–5 and No.I33–11. Is the action complete?	—	Go to Step 5	—
7	Is there continuity between the harness side connector terminal No.I49–6 and No.I33–12?	—	Go to Step 9	Go to Step 8
8	Repair an open circuit between terminal No.I49–6 and No.I33–12. Is the action complete?	—	Go to Step 7	—
9	Is there continuity between the harness side connector terminal No.I49–1 and No.I33–13?	—	Go to Step 11	Go to Step 10
10	Repair an open circuit between terminal No.I49–1 and I33-13. Is the action complete?	—	Go to Step 9	—
11	Is there continuity between the harness side connector terminal No.I49–2 and No.I33–14?	—	Go to Step 13	Go to Step 12
12	Repair an open circuit between harness No.I49–2 and No.I33–14. Is the action complete?	—	Go to Step 11	—
13	1. Disconnect the intake actuator connector No.I49. 2. Is the battery voltage applied between harness side connector terminal No.I49–6 and ground? No.I49–2 and ground? No.I49–1 and ground?	—	Go to Step 14	Go to Step 15
14	Replace or repair the intake actuator. Is the action complete?	—	Verify repair	—
15	Replace or repair the air conditioner control unit. Is the action complete?	—	Verify repair	—

Downloaded from www.Manualslib.com manuals search engine

Inspection of the Mix Actuator System

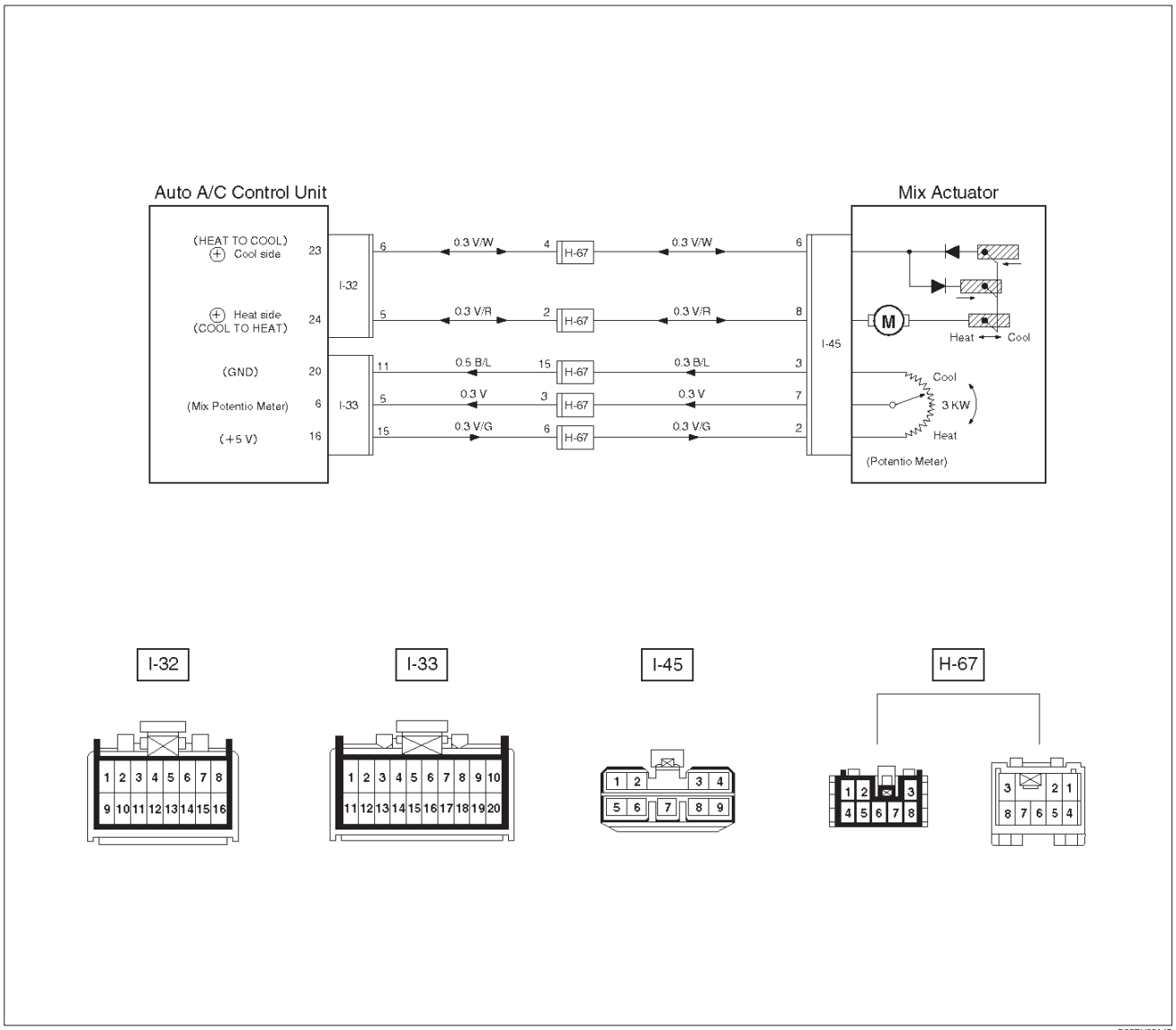

Condition	Possible cause	Correction
Does not work at all	—	Refer to Chart A
Control failure	—	Refer to Chart B

Downloaded from www.Manualslib.com manuals search engine

Chart A: Does Not work At All

Step	Action	Value(s)	Yes	No
1	1. Turn on the ignition switch (the engine is run). 2. Disconnect the mix actuator connector (I–45). 3. Short-circuit the chassis harness side connector terminal No.I45–3 and No.I45–7. 4. Using the temperature control lever, select FH for the temperature. Is the battery voltage applied on a regular interval basis between the harness side connector terminal No.I45–6 (-) and No.I45–8 (+)?	—	Go to Step 3	Go to Step 2
2	Replace the auto air conditioner control unit.	—	Varify repair	—
3	Using the temperature control lever, select FC for the temperature. Is the battery voltage applied on a regular interval basis between the harness side connector terminal No.I45–6 (+) and No.I45–8 (-)?	—	Go to Step 5	Go to Step 4
4	Replace the auto air conditioner control unit.	—	Verify repair	—
5	Is there continuity between the harness side connector terminal No.I32–6 and No.I45–6?	—	Go to Step 7	Go to Step 6
6	Repair an open circuit between terminal No.I32–6 and No.I45–6. Is the action complete?	—	Go to Step 5	—
7	Is there continuity between the harness side connector terminal No.I32–5 and No.I45–8?	—	Go to Step 9	Go to Step 8
8	Repair an open circuit between terminal No.I32–5 and No.I45–8. Is the action complete?	—	Verify repair	—
9	Replace the mix actuator. Is the action complete?	—	Verify repair	—

Downloaded from www.Manualslib.com manuals search engine

Chart B: Mix Actuator Control Failure

Step	Action	Value(s)	Yes	No
1	Turn the ignition switch (the engine is run). Dose the mix actuator fully stroke when FH and FC of the temperature control lever?	—	Go to Step 3	Go to Step 2
2	Repair or replace the air mix door or the link unit. Is the action complete?	—	Varify repair	—
3	Is there continuity between the harness side connector terminal No.I45–3 and No.I33–11?	—	Go to Step 5	Go to Step 4
4	Repair an open circuit between terminal No.I45–3 and No.I33–11. Is the action complete?	—	Go to Step 3	—
5	Is there continuity between harness side connector terminal No.I45–7 and No.I33–5?	—	Go to Step 7	Go to Step 6
6	Repair an open circuit between terminal No.I45–7 and No.I33–5. Is the action complete?	—	Go to Step 5	—
7	Is there continuity between the harness side connector terminal No.I45–2 and No.I33–15?	—	Go to Step 9	Go to Step 8
8	Repair an open circuit between terminal No.I45–2 and No.I33–15. Is the action complete?	—	Go to Step 7	—
9	Is sum of the voltage between the following chassis harness side connector terminals approximately 5V? No.I33–15 and No.I33–5, No.I33–5 and No.I33–11	—	Go to Step 11	Go to Step 10
10	Replace the actuator. Is the action complete?	—	Verify repair	—
11	Replace the auto air conditioner control unit. Is the action complete?	—	Verify repair	—

Downloaded from www.Manualslib.com manuals search engine

Inspection of the Mode Actuator System

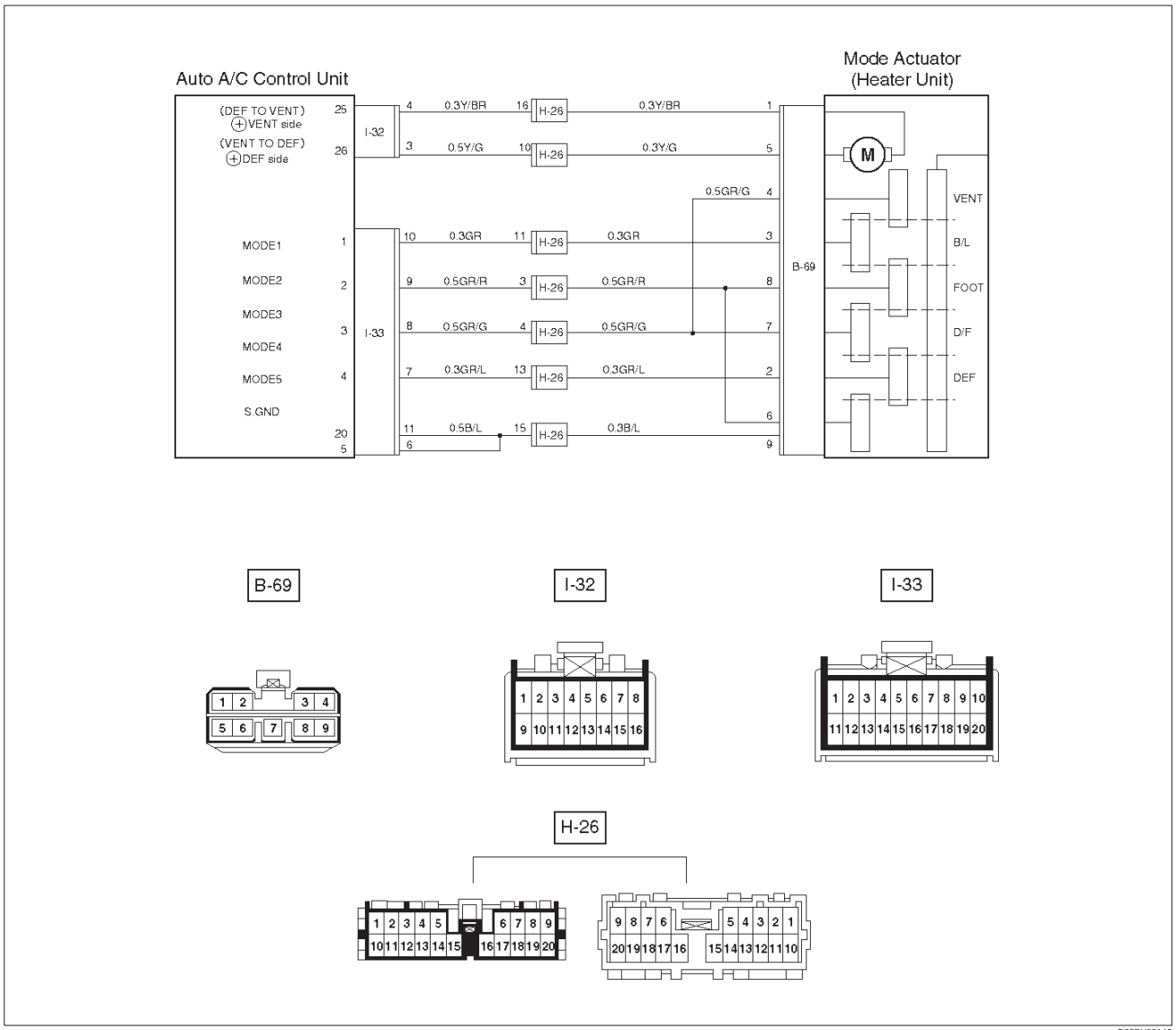

Condition	Possible cause	Correction
Does not work at all	—	Refer to Chart A
Control failure	—	Refer to Chart B

Downloaded from www.Manualslib.com manuals search engine

Chart A: Does Not Work At All

Step	Action	Value(s)	Yes	No
1	1. Turn on the ignition switch (the engine is run). 2. Disconnect the mode actuator connector (B–69) 3. Select VENT pressing the mode actuator. Is the battery voltage provided on a regular interval between the harness side connector terminal No.B69–1 (+) and No.B69–5 (-)?	—	Go to Step 3	Go to Step 2
2	Replace the auto air conditioner control unit. Is the action complete?	—	Varify repair	—
3	Turn on the DEF mode switch. Is the battery voltage provided on a regular interval between the chassis side connector terminal No.B69–5 (+) and No.B69–1 (-)?	—	Go to Step 5	Go to Step 4
4	Replace the auto air conditioner control unit.	—	Varify repair	—
5	Is there continuity between the harness side connector terminal No.B69–1 and No.I32–4?	—	Go to Step 7	Go to Step 6
6	Repair an open circuit between terminal No.B69–1 and No.I32–4. Is the action complete?	—	Go to Step 5	—
7	Is there continuity between the harness side connector terminal No.B69–5 and No.I32–3?	—	Go to Step 9	Go to Step 8
8	Repair an open circuit between terminal No.B69–5 and No.I32–3. Is the action complete?	—	Verify repair	—
9	Replace the mode actuator.	—	Verify repair	—

Downloaded from www.Manualslib.com manuals search engine

Chart B: Mode Actuator Control Failure

Step	Action	Value(s)	Yes	No
1	Turn on the ignition switch (the engine is run). Dose the mode actuator fully stroke when the defrost mode and the vent mode are selected?	—	Go to Step 3	Go to Step 2
2	Repair or replace the mode door or the link unit. Is the action complete?	—	Go to Step 1	—
3	Is there continuity between the harness side connector terminal No.B69–9 and No.I33–11?	—	Go to Step 5	Go to Step 4
4	Repair an open circuit between terminal No.B69–9 and No.I33–11. Is the action complete?	—	Go to Step 3	—
5	Is there continuity between the harness side connector terminal No.B69–3 and No.I33–10?	—	Go to Step 7	Go to Step 6
6	Repair an open circuit between terminal No.B69–3 and No.I33–10. Is the action complete?	—	Go to Step 5	—
7	Is there continuity between harness side connector terminal No.B69–4 and No.I33–8?	—	Go to Step 9	Go to Step 8
8	Repair an open circuit between terminal No.B69–4 and No.I33–8. Is the action complete?	—	Go to Step 7	—
9	Is sum of the voltage between the following harness side connector terminal approximately 5V? Voltage between No.I33–8 and No.I33–10 plus voltage between No.I33–8 and No.I33–11	5V	Go to Step 11	Go to Step 10
10	Replace the actuator. Is the action complete?	—	Verify repair	—
11	Dose the mode actuator work normally through manual operation?	—	Go to Step 13	Go to Step 12
12	Replace the sensor. Is the action complete?	—	Verify repair	—
13	Replace the auto air conditioner control unit. Is the action complete?	—	Verify repair	—

Downloaded from www.Manualslib.com manuals search engine

Inspection of the Fan Motor System

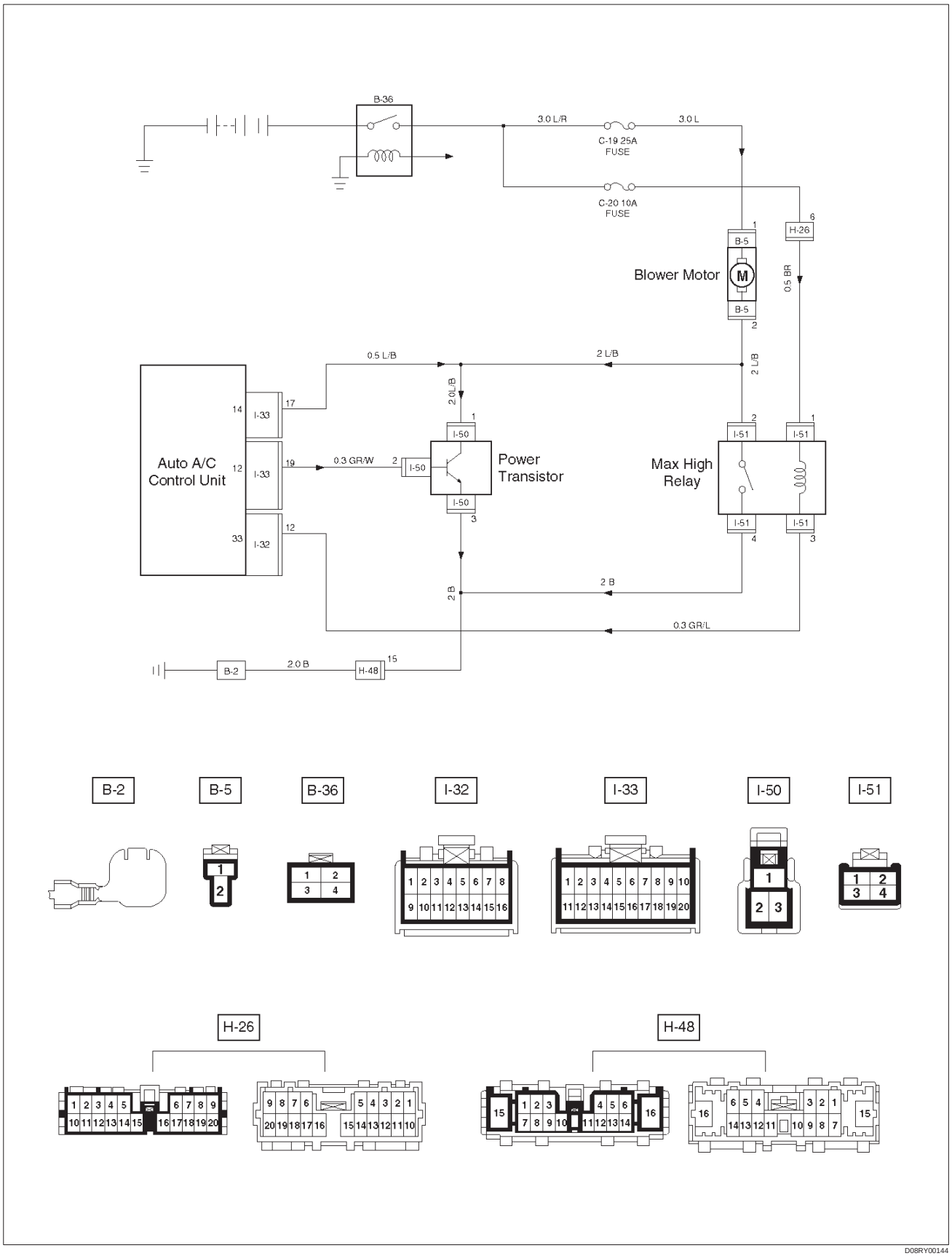

D08RY00144

Downloaded from www.Manualslib.com manuals search engine

Condition	Possible cause	Correction
The fan dose not rotate at all	—	Refer to Chart A
The fan dose not rotate in the MAX–HI mode	—	Refer to Chart B
The fan dose not rotate in any mode other than MAX–HI	—	Refer to Chart C
The fan dose not stop	—	Refer to Chart D

Chart A: Fan Does Not Rotate At All

Step	Action	Value(s)	Yes	No
1	Are the fuse No.C–19 and No.C–20 normal?	—	Go to Step 2	Replace the fuse
2	Are the relay No.B–36 and No.I–51 normal?	—	Go to Step 3	Replace the relay
3	Turn on the ignition switch (the engine is run). Is the battery voltage applied between the harness side connector terminal No.B5–1 and ground?	—	Go to Step 5	Go to Step 4
4	Repair an open circuit between terminal No.B5–1 and No.C–19 fuse. Is the action complete?	—	Go to Step 3	—
5	Is there continuity between the harness side connector terminal No.B5–2 and ground (No.B–2)?	—	Go to Step 7	Go to Step 6
6	Repair an open circuit between terminal No.B5–2 and ground. Is the action complete?	—	—	—
7	Is the battery voltage applied between the harness side connector terminal No.B5–2 and No.B5–1?	—	Go to Step 8	Go to Step 9
8	Replace the blower motor. Is the action complete?	—	Verify repair	—
9	Refer to chart B and C. Is the action complete?	—	Verify repair	—

Downloaded from www.Manualslib.com manuals search engine

Chart B: Fan Does Not Rotate in MAX HI Mode

Step	Action	Value(s)	Yes	No
1	Is the MAX-HI relay (I–51) normal?	—	Go to Step 2	Replace the relay
2	1. Turn on the ignition switch (the engine is run). 2. Set the fan switch to the MAX-HI. Is there continuity between the harness side connector terminal No.B5–2 and No.I51–2?	—	Go to Step 4	Go to Step 3
3	Repair an open circuit between terminal No.B5–2 and No.I51–2. Is the action complete?	—	Go to Step 3	—
4	Is there continuity between the harness side connector terminal No.I51–4 and ground (No.B–2)?	—	Go to Step 6	Go to Step 5
5	Repair an open circuit between terminal No.I51–4 and ground (No.B–2). Is the action complete?	—	Go to Step 4	—
6	Is the battery voltage applied between the harness side connector terminal No.I51–1 and ground?	—	Go to Step 8	Go to Step 7
7	Repair an open circuit between terminal No.I51–1 and No.C–20 fuse. Is the action complete?	—	Go to Step 6	—
8	Is the battery voltage applied between the harness side connector terminal No.I32–12 and ground?	—	Go to Step 10	Go to Step 9
9	Repair an open circuit between terminal No.I51–3 and No.I32–12. Is the action complete?	—	Verify repair	—
10	Replace the auto air conditioner control unit. Is the action complete?	—	Verify repair	—

Downloaded from www.Manualslib.com manuals search engine

Chart C: Fan Does Not Rotate In Any Mode Other Than MAX HI

Step	Action	Value(s)	Yes	No
1	Is the power transistor performance normal? (Refer to the later section on “individual inspection”)	—	Go to Step 2	Replace the power transistor
2	Is there continuity between the harness side connector terminal No.B5–2 and No.I50–1, No.B5–2 and No.I33–17?	—	Go to Step 4	Go to Step 3
3	Repair an open circuit between terminal. No.B5–2 and I50–1 No.B5–2 and I33–17	—	Go to Step 2	—
4	Is there continuity between the harness side connector terminal No.I50–3 and ground (No.B–2)?	—	Go to Step 6	Go to Step 5
5	Repair an open circuit between terminal No.I50–3 and ground. Is the action complete?	—	Go to Step 4	—
6	Is there continuity between the harness side connector terminal No.I50–2 and No.I33–19?	—	Go to Step 8	Go to Step 7
7	Repair an open circuit between terminal No.I50–2 and No.I33–19. Is the action complete?	—	Go to Step 6	—
8	Replace the auto air conditioner control unit. Is the action complete?	—	Verify repair	—

Downloaded from www.Manualslib.com manuals search engine

Chart D: Fan Does Not Stop

Step	Action	Value(s)	Yes	No
1	1. Disconnect the max high relay, the power transistor connector I–50 and the auto A/C control unit connector I–33. 2. Turn on the ignition switch. Does the blower motor stop?	—	Go to Step 3	Go to Step 2
2	Repair a short circuit between connector No.B5–2 and No.I51–2, No.B5–2 and No.I50–1, or No.B5–2 and I33–17. Is the action complete?	—	Verify repair	—
3	Is the max high relay normal? (Refer to the later section on “individual inspection”.)	—	Go to Step 4	Replace the relay
4	Reinstall the max high relay. Does the blower motor start operating?	—	Go to Step 6	Go to Step 5
5	Repair a short circuit between connector No.I51–3 and No.I32–12. Is the action complete?	—	Go to Step 4	—
6	Is the power transistor normal? (Refer to the later section on “individual inspection”.)	—	Go to Step 7	Replace the power transistor
7	Reinstall the power transistor. Does the blower motor start operating?	—	Replace the auto A/C control unit	—

Downloaded from www.Manualslib.com manuals search engine

Inspection of the Magnetic Clutch System

6VE1 Engine

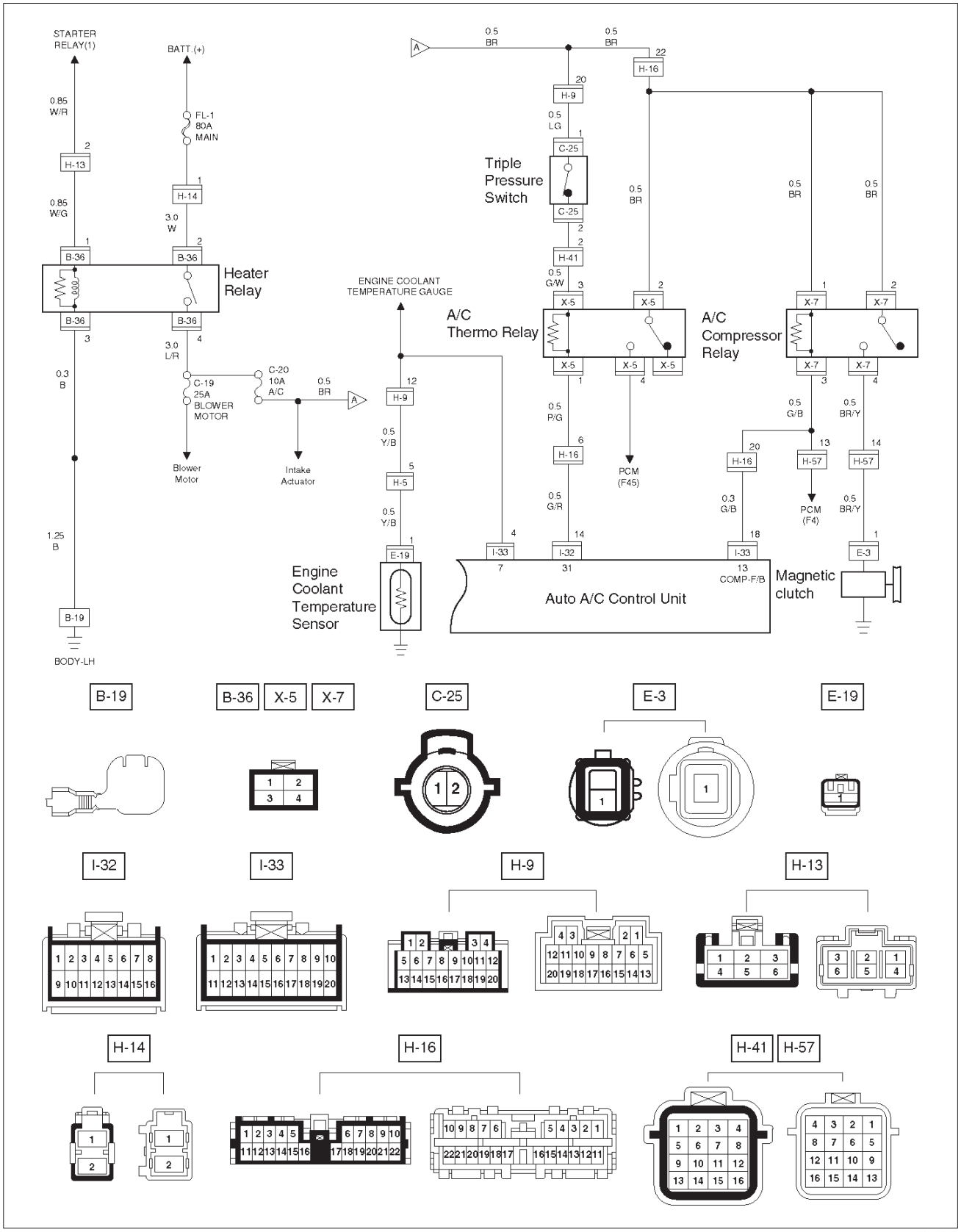

Downloaded from www.Manualslib.com manuals search engine

Condition	Possible cause	Correction
Magnetic clutch does not work	—	Refer to Chart A

Chart A: Magnetic Clutch Does Not work

Step	Action	Value(s)	Yes	No
1	Is the fuse No.C–20 normal?	—	Go to Step 2	Replace the fuse
2	Is the relay No.X–7 (compressor relay) No.X–5 (A/C thermo relay) and No.B–36 (heater relay) normal?	—	Go to Step 3	Replace the fuse
3	Is the thermo unit normal?	—	Go to Step 4	Replace the thermo unit
4	Is the pressure switch normal?	—	Go to Step 5	Replace the pressure switch
5	1. Turn the ignition switch on. (the engine is run.) 2. Push the air conditioner switch on. Is the battery voltage applied between the harness side connector terminal No.E3–1 and the ground?	—	Go to Step 6	Go to Step 7
6	Repair or replace the magnetic clutch. Is the action complete?	—	Verify repair	—
7	Is there continuity between the harness side connector terminal No.X7–4 and No.E3–1?	—	Go to Step 9	Go to Step 8
8	Repair an open circuit between terminal No.X7–4 and No.E3–1. Is the action complete?	—	Go to Step 7	—
9	Is the battery voltage applied between the harness side connector terminal No.X7–2 and ground, No.X7–1 and ground?	—	Go to Step 11	Go to Step 10
10	Repair an open circuit between terminal No.X7–2 and fuse No.C–20, No.X7–1 and fuse No.C–20. Is the action complete?	—	Go to Step 9	—
11	Is the battery voltage applied between the harness side connector terminal No.I33–18 and ground?	—	Go to Step 13	Go to Step 12
12	Repair an open circuit between terminal No.I33–18 and No.X7–3. Is the action complete?	—	Go to Step 11	—
13	Is the battery voltage applied between the harness side connector terminal No.C25–1 and ground?	—	Go to Step 15	Go to Step 14
14	Repair an open circuit between terminal No.C25–1 and fuse No.C–20. Is the action complete?	—	Go to Step 13	—
15	Is the battery voltage applied between the harness side connector terminal No.X5–3 and ground, No.X5–2 and ground?	—	Go to Step 17	Go to Step 16
16	Repair an open circuit between terminal No.X5–3 and No.C25–2, No.X5–2 and fuse No.C–20. Is the action complete?	—	Go to Step 15	—
17	Is the battery voltage applied between the harness side connector terminal No.I32–14 and ground?	—	Go to Step 19	Go to Step 18

Downloaded from www.Manualslib.com manuals search engine

Chart A: Magnetic Clutch Does Not work (Cont'd)

Step	Action	Value(s)	Yes	No
18	Repair an open circuit between terminal No.X5–1 and I32–14. Is the action complete?	—	Go to Step 17	—
19	Is there continuity between the harness side connector terminal No.I33–4 and ground?	—	Go to Step 21	Go to Step 20
20	Repair an open circuit between terminal No.I33–4 and No.E19–1. Is the action complete?	—	Go to Step 20	—
21	Dose the thermo relay "ON" when connecting ground to the harness connector terminal No.H16–6?	—	Go to Step 23	Go to Step 22
22	Failure on the auto air conditioner control unit. Is the action complete?	—	Verify repair	—

CAUTION: There are conditions which air conditioner system dose not operate except trouble as follows.

1. **The throttle is griater than 90%.**
2. **The ignition voltage is below 10.5 volts.**
3. **The engine speed greater than 4500 RPM for 5 seconds or 5400 RPM.**
4. **The engine coolant temperature (ECT) is greater than 257˚F.**
5. **The intake air temperature (IAT) is less than 41˚F.**
6. **The power steering pressure switch signals a high pressure condition.**

Downloaded from www.Manualslib.com manuals search engine

Individual Inspection

In Car Sensor

1. Disconnect the in car sensor connector (I–34).
2. Measure resistance between the in car sensor side terminal No.I34–3 and No.I34–4.

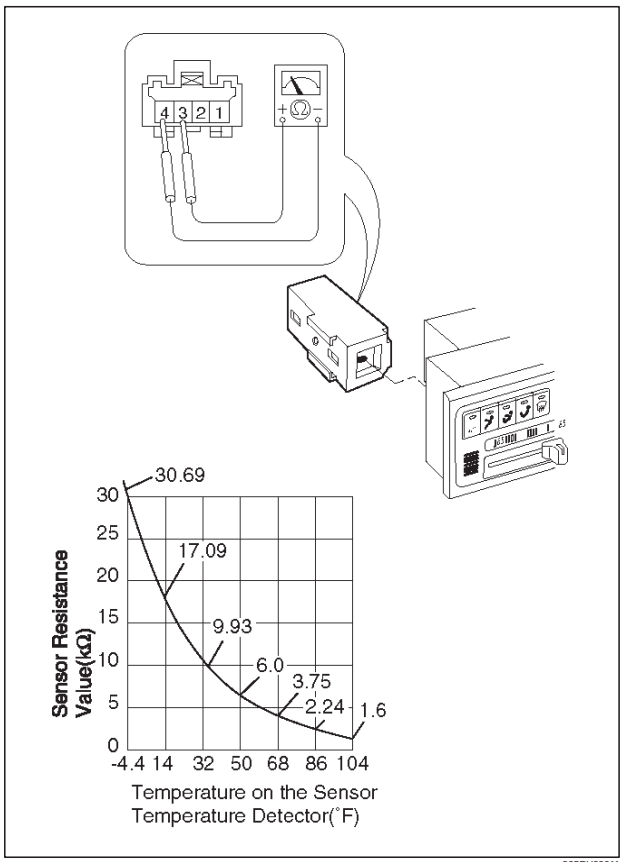

865RY00011

Sun Sensor

1. Disconnect the sun sensor connector (I–35).
2. Measure the current value on the sun sensor when placed it approximately 15 cm away from 60W incandescent lamp.

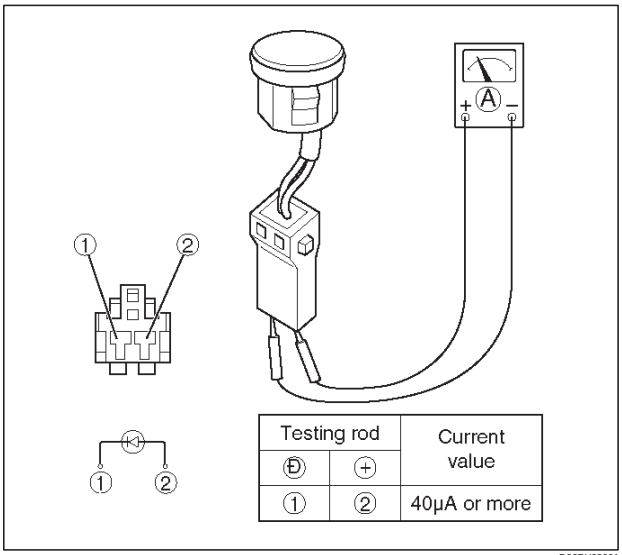

D06RY00001

Ambient Sensor

1. Disconnect the connector (C–86) on the ambient sensor.
2. Measure resistance between the ambient sensor side terminals.

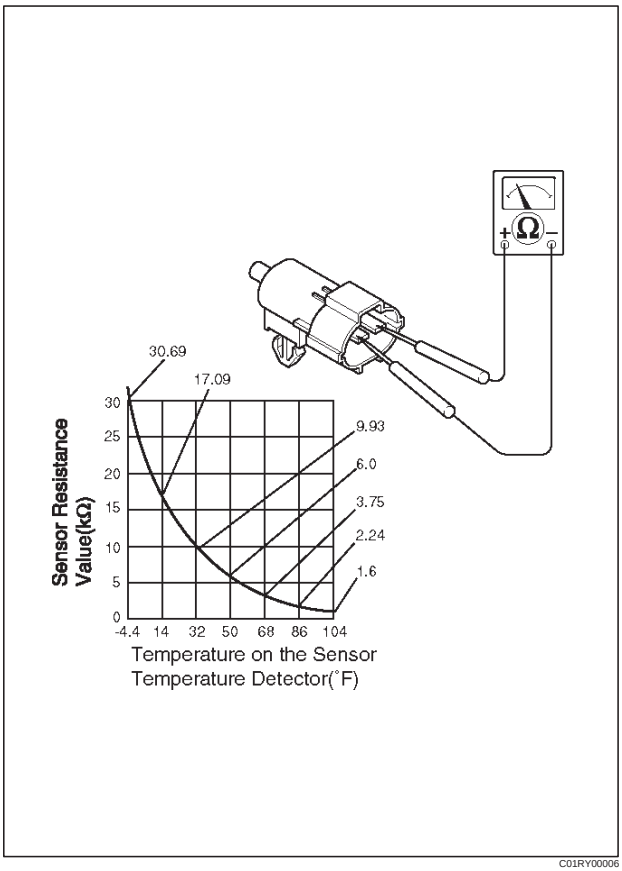

C01RY00006

Downloaded from www.Manualslib.com manuals search engine

Power Transistor

1. Remove the power transistor connector (I–50) from the evaporator assembly.
2. Check the conduction between the power transistor side terminals.

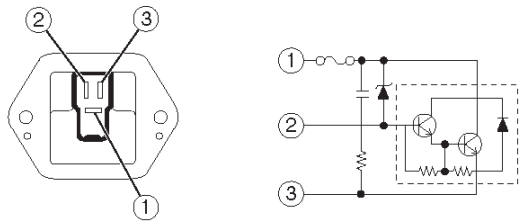

Terminal No.	1	2	3	Conduction
Testing rod	⊖	⊕		Conducted (50Ω maximum)
	⊖		⊕	Conducted (100Ω maximum)
	⊕	⊖		Not conducted
	⊕	⊖		Conducted (220Ω maximum)
		⊖	⊕	Not conducted

C01RY00002

MAX HI Relay

1. Remove the MAX – HI relay connector (I–51) from the blower assembly.
2. Check the conduction between the MAX – HI relay side terminals.

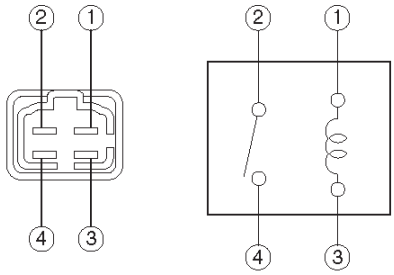

No continuity between terminals (2) and (4).
Continuity between terminal (2) and (4) when battery voltage is applied between (1) and (3).

C01RY00003

In Car Sensor

1. Turn on the ignition switch (the engine is started). Start the air conditioner in “Full Auto”.
2. Make sure that the in car sensor suctions cigarette smokes and such.

In Car Sensor

1. Dismount the in car sensor from the automatic heater/air conditioner control unit. Connect (+) end and (–) end of the battery to the aspirator motor side terminals No.I34–1 and No.I34–2, respectively, then check if the motor runs normally.

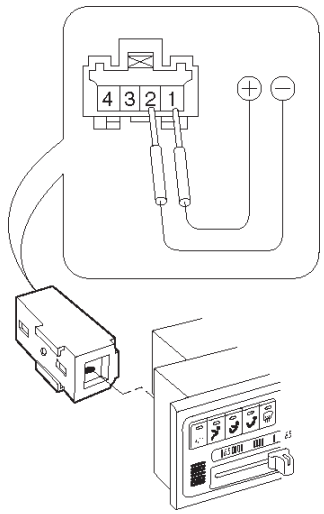

C01RY00005

Downloaded from www.Manualslib.com manuals search engine

Heater (B–36), Thermostat (X–5), And Compressor (X–7) Relay

1. Disconnect relays and check for continuity and resistance between relay terminals.
   - For handling of these relays, refer to Heater Relay in this section.

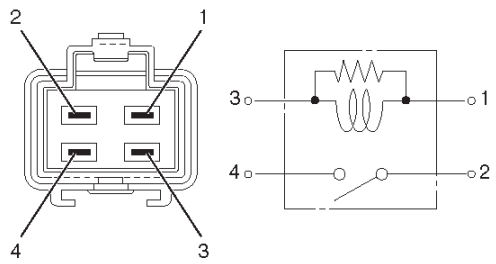

2 – 4 ...No continuity

(When battery voltage is applied between 1 and 3)

2 – 4 ...Continuity

901RY00041

Triple Pressure Switch (V6, A/T)

1. Disconnect the connector and check for continuity between pressure switch side connector terminals (1) and (2).
2. Reconnect the connector to activate the A/C switch, and check to see if there is continuity between the chassis side connector terminal (3) and (4) and the fan operates.

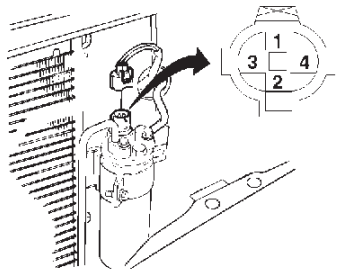

Terminal	Conducted
1-2	ON OFF kpa 176.5 186.3 2353.6 2942.0 (psi) (25.6) (27.0) (341.3) (426.6)
3-4	ON OFF kpa 1078.7 1471.0 (psi) (156.4) (213.3)

875RX009

Downloaded from www.Manualslib.com manuals search engine

On-Vehicle Service

Power Transistor

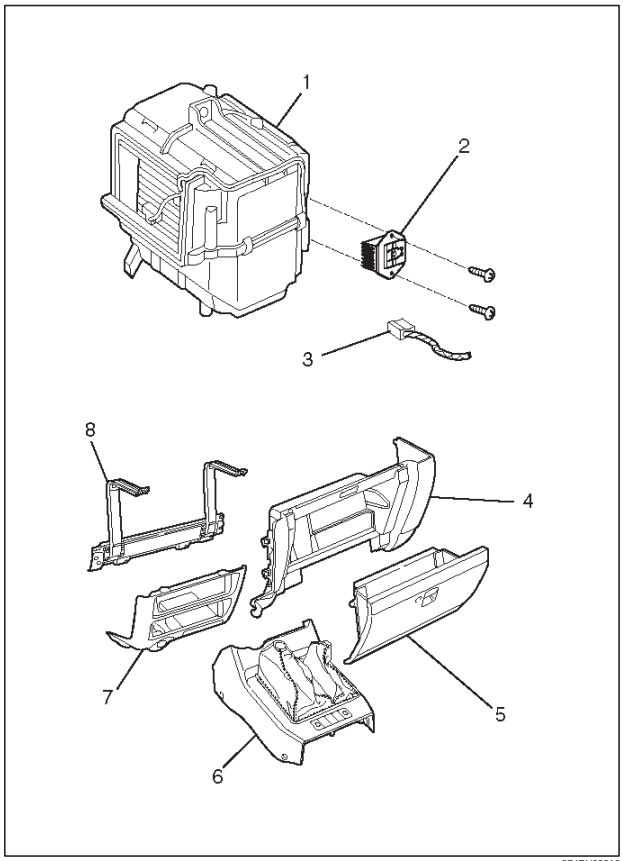

874RY00010

Legend

(1) Evaporator Assembly
(2) Power Transistor
(3) Power Transistor Connector
(4) Instrument Panel Passenger Lower Cover
(5) Glove Box
(6) Front Console
(7) Lower Cluster
(8) Passenger Knee Bolster Reinforcement

Removal

1. Remove front console.
2. Remove lower cluster.
3. Remove glove box.
4. Remove instrument panel passenger lower cover.
5. Remove passenger knee bolster reinforcement.
6. Disconnect the power transistor connector.
7. Remove power transistor.

Installation

To install, follow the removal step in the reverse order.

Automatic Heater/Air Conditioner Control Unit

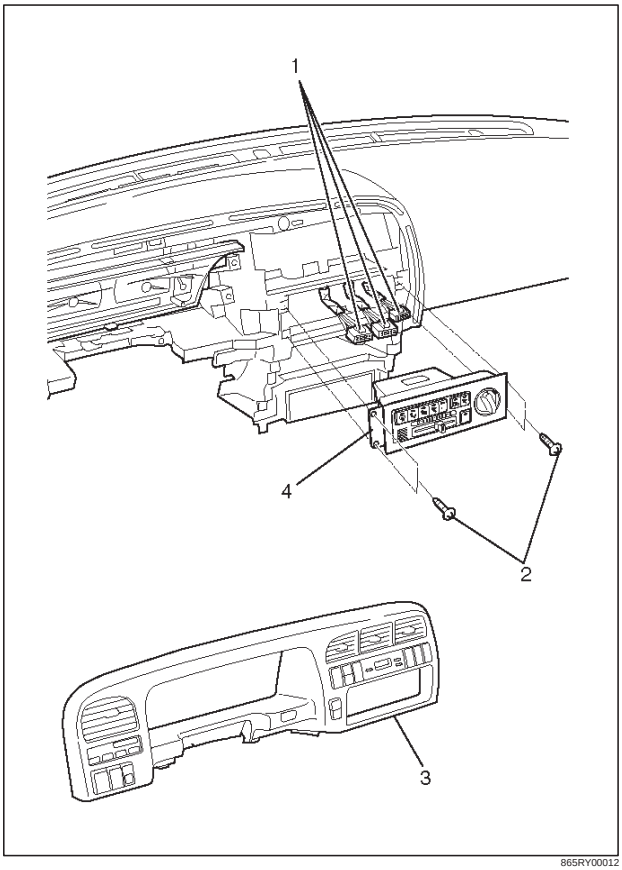

865RY00012

Legend

(1) Connector
(2) Set Screw
(3) Instrument Panel Cluster
(4) Automatic Heater/Air Conditioner Control Unit

Removal

1. Disconnect the battery ground cable.
2. Remove instrument panel cluster.
   - Refer to Instrument Panel Assembly in Body Stractur section.
3. Disconnnect the automatic heater/air conditioner control unit connector.
4. Remove automatic heater/air conditioner control unit.

Installation

To install, follow the removal step in the reverse order.

Downloaded from www.Manualslib.com manuals search engine

In Car Sensor

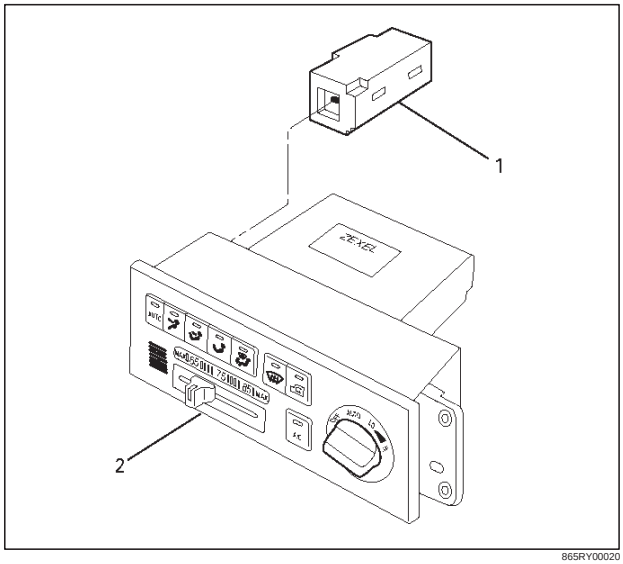

865RY00020

Legend

(1) In Car Sensor
(2) Automatic Heater/Air Conditioner Control Unit

Removal

1. Disconnect the battery ground cable.
2. Remove the automatic heater/air conditioner control unit.
   - Refer to the automatic heater/air conditioner control unit section.
3. Remove in car sensor.

Installation

To install, follow the removal step in the reverse order.

Ambient Sensor

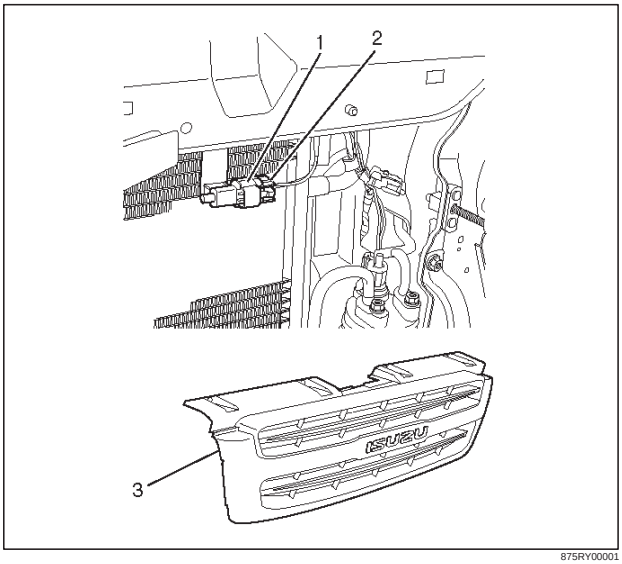

875RY00001

Legend

(1) Ambient Sensor
(2) Sensor Connector
(3) Radiator Grille

Removal

1. Disconnect the battery ground cable.
2. Remove radiator grille.
   - Refer to Radiator Grille in Body Structure section.
3. Disconnect the ambient sensor connector.
4. Remove the ambient sensor.

Installation

To install, follow the removal step in the reverse order.

Downloaded from www.Manualslib.com manuals search engine

Sun Sensor

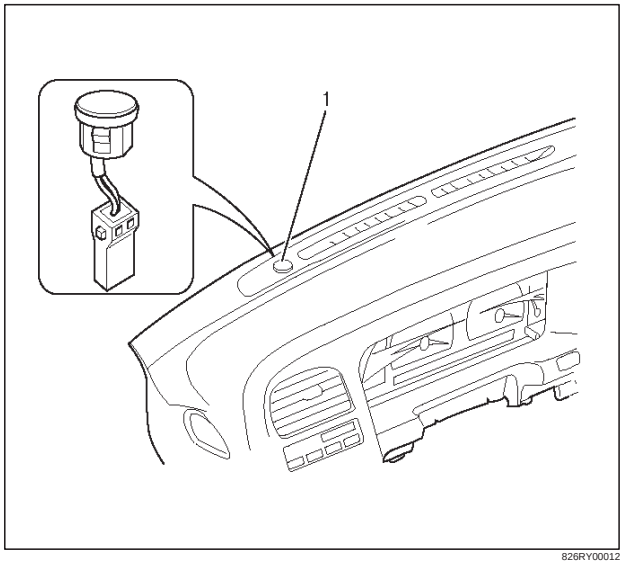

826RY00012

Legend
(1) Sun Sensor

Removal

1. Disconnect the battery ground cable.
2. Remove the sun sensor.
3. Disconnect the sun sensor connector.

Installation

To install, follow the removal step in the reverse order.

Electronic Thermostat

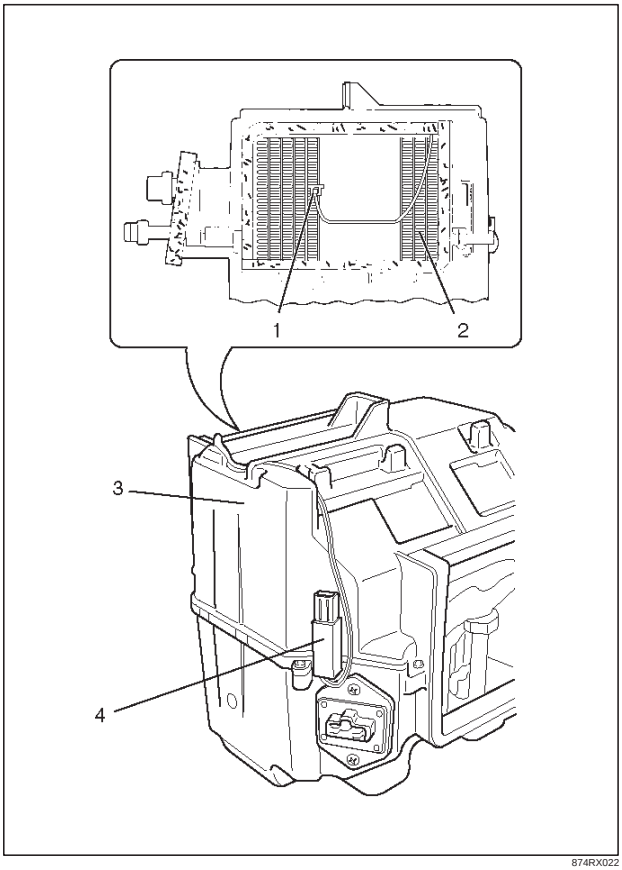

874RX022

Legend
(1) Duct Sensor
(2) Evaporator Core
(3) Evaporator Assembly
(4) Thermostat Assembly

Removal

1. Disconnect the battery ground cable.
2. Remove evaporator assembly.
   - Refer to evaporator assembly section.
3. Remove electronic thermostat.

Installation

To install, follow the removal step in the reverse order.

Downloaded from www.Manualslib.com manuals search engine

Mode Actuator

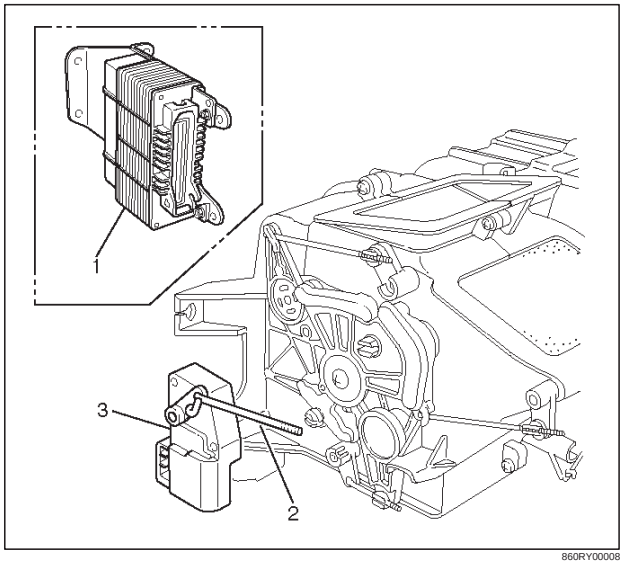

860RY00008

Legend

(1) A/T Control Unit
(2) Actuator Rod
(3) Mode Actuator

Removal

1. Disconnect the battery ground cable.
2. Remove the PCM.
   - The connector shall remain connected.
3. Remove the actuator rod.
4. Remove the mode actuator.

Installation

To install, follow the remove step in the reverse order.

Mix Actuator

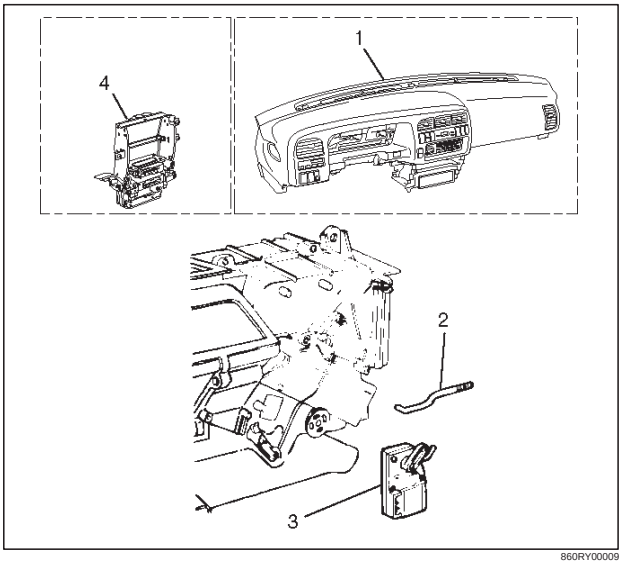

860RY00009

Legend

(1) Instrument Panel Assembly
(2) Actuator Rod
(3) Mix Actuator
(4) Instrument Panel Center Bracket

Removal

1. Disconnect the battery ground cable.
2. Remove the instrument panel assembly.
   - Refer to the Instrument Panel Assembly in Body and Accessories section.
3. Remove the instrument panel center bracket.
4. Remove the actuator rod.
5. Remove the mix actuator.

Installation

To install, follow the remove step in the reverse order.

Downloaded from www.Manualslib.com manuals search engine

Intake Actuator

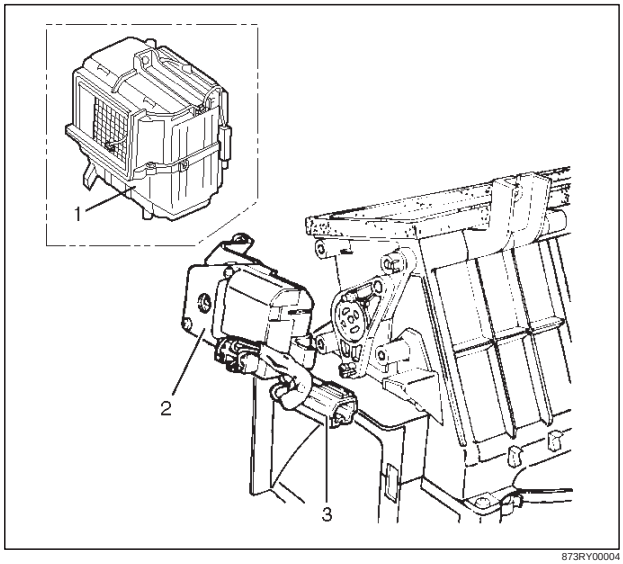

873RY00004

Legend

(1) Evaporator Assembly
(2) Intake Actuator
(3) Intake Actuator Connector

Removal

1. Disconnect the battery ground cable.
2. Discharge and recover refrigerant.
   - Refer to Refrigerant Recovery in this section.
3. Remove the evaporator assembly.
   - Refer to Evaporator Assembly section.
4. Disconnect the intake actuator connector.
5. Remove the intake actuator.

Installation

To install, follow the remove step in the reverse order.

Downloaded from www.Manualslib.com manuals search engine

TROOPER

STEERING

POWER ASSISTED SYSTEM

CONTENTS

Service Precaution 2A–2
General Description 2A–2
Diagnosis 2A–5
Power Steering System Test 2A–11
Maintenance 2A–12
Fluid Level 2A–12
Bleeding The Power Steering System 2A–12
Bleeding Procedure 2A–12
Flushing The Power Steering System 2A–12
Steering Wheel Free Play Adjustment 2A–13
Front End Alignment Inspection and Adjustment 2A–13
Main Data and Specifications 2A–18
Special Tools 2A–19
Power Steering Gear 2A–20
- Power Steering Gear and Associated Parts 2A–20
- Removal 2A–20
- Installation 2A–21
- Steering Gear Disassembled View 2A–22
- Disassembly 2A–23
- Inspection and Repair 2A–24
- Reassembly 2A–25
- Main Data and Specifications 2A–27

Power Steering Pump 2A–28
- Power Steering Pump and Associated Parts 2A–28
- Removal 2A–28
- Installation 2A–29
- Power Steering Pump Disassembled View 2A–30
- Disassembly 2A–30
- Inspection and Repair 2A–31
- Reassembly 2A–32
- Main Data and Specifications 2A–33

Center Track Rod Assembly 2A–34
- Center Track Rod Assembly and Associated Parts 2A–34
- Removal 2A–35
- Inspection and Repair 2A–35
- Installation 2A–35

Outer Track Rod Assembly 2A–36
- Outer Track Rod Assembly and Associated Parts 2A–36
- Removal 2A–37
- Inspection and Repair 2A–37
- Installation 2A–38

Relay Lever 2A–39
- Relay Lever and Associated Parts 2A–39
- Removal 2A–39
- Installation 2A–40

Steering Linkage and Associated Parts 2A–41
- Main Data and Specifications 2A–41
- Special Tools 2A–42

Supplemental Restraint System Steering Wheel & Column 2A–43
- Service Precaution 2A–43
- SRS Connectors 2A–43

Inflator Module 2A–45
- Inflator Module and Associated Parts 2A–45
- Removal 2A–45
- Inspection and Repair 2A–46
- Installation 2A–46

Steering Wheel 2A–47
- Steering Wheel and Associated Parts 2A–47
- Removal 2A–47
- Installation 2A–49

Combination Switch 2A–50
- Combination Switch and Associated Parts 2A–50
- Removal 2A–50
- Installation 2A–52

Lock Cylinder 2A–54
- Lock Cylinder and Associated Parts 2A–54
- Removal 2A–54
- Installation 2A–56
- System Inspection 2A–57

Steering Column 2A–58
- Steering Column and Associated Parts . . . 2A–58
- Removal 2A–58
- Inspection 2A–60
- Installation 2A–62
- System Inspection 2A–63

Supplemental Restraint System Steering Wheel & Column and Associated Parts 2A–64
- Main Data and Specifications 2A–64
- Special Tools 2A–65

Downloaded from www.Manualslib.com manuals search engine

Service Precaution

WARNING: THIS VEHICLE HAS A SUPPLEMENTAL RESTRAINT SYSTEM (SRS). REFER TO THE SRS COMPONENT AND WIRING LOCATION VIEW IN ORDER TO DETERMINE WHETHER YOU ARE PERFORMING SERVICE ON OR NEAR THE SRS COMPONENTS OR THE SRS WIRING. WHEN YOU ARE PERFORMING SERVICE ON OR NEAR THE SRS COMPONENTS OR THE SRS WIRING, REFER TO THE SRS SERVICE INFORMATION. FAILURE TO FOLLOW WARNINGS COULD RESULT IN POSSIBLE AIR BAG DEPLOYMENT, PERSONAL INJURY, OR OTHERWISE UNNEEDED SRS SYSTEM REPAIRS.

CAUTION: Always use the correct fastener in the proper location. When you replace a fastener, use ONLY the exact part number for that application. ISUZU will call out those fasteners that require a replacement after removal. ISUZU will also call out the fasteners that require thread lockers or thread sealant. UNLESS OTHERWISE SPECIFIED, do not use supplemental coatings (Paints, greases, or other corrosion inhibitors) on threaded fasteners or fastener joint interfaces. Generally, such coatings adversely affect the fastener torque and the joint clamping force, and may damage the fastener. When you install fasteners, use the correct tightening sequence and specifications. Following these instructions can help you avoid damage to parts and systems.

General Description

The hydraulic power steering system consists of a pump, an oil reservoir, a steering gear, a pressure hose and a return hose.

Power Steering Gear

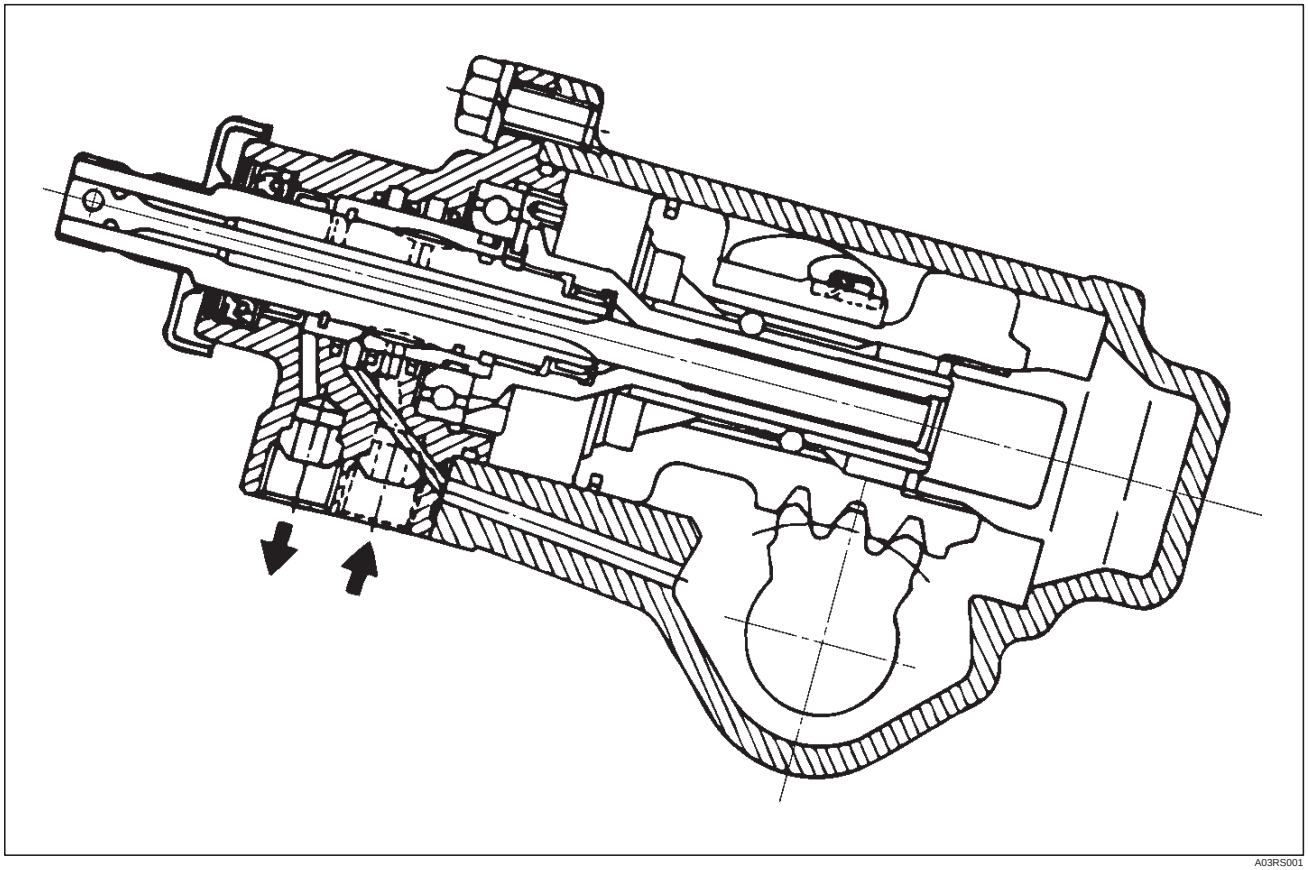

A03RS001

The power steering gear has a recirculating ball system which acts as a rolling thread between the worm shaft and the rack piston. When the worm shaft is turned right, the rack piston moves up in gear.

Turning the worm shaft left moves the rack piston down in gear. The rack piston teeth mesh with the sector gear, which is part of the sector shaft.

Turning the worm shaft turns the sector shaft, which turns the wheels through the steering linkage.

The control valve in the steering gear directs the power steering fluid to either side of the rack piston.

The rack piston converts the hydraulic pressure into a mechanical force. If the steering system becomes damaged and loses hydraulic pressure, the vehicle can be controlled manually.

Downloaded from www.Manualslib.com manuals search engine

Hydraulic Pump

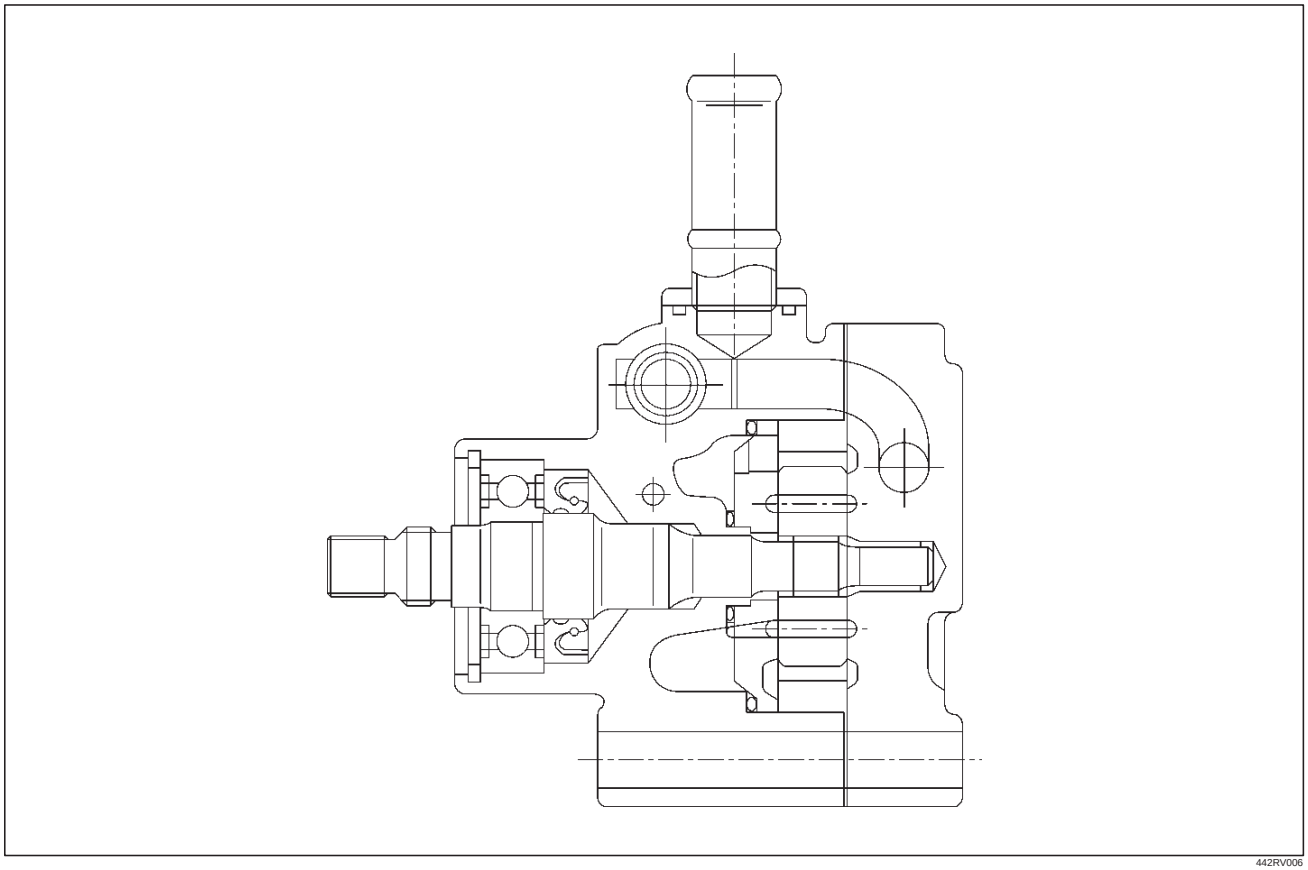

The hydraulic pump is a vane-type design. There are two openings at the rear of the pump housing. The larger opening contains the cam ring, pressure plate, thrust plate, rotor and vane assembly, and end plate. The smaller opening contains the pressure line union, flow control valve and spring.

Pressure Switch

When hydraulic pressure reaches 3650 ± 350 kPa (530 ± 50 psi), the pressure switch of the power steering pump closes causing the Powertrain Control Module (PCM) to actuate the idle air control valve, which increases the engine rpm to prevent the overload-induced engine speed slow down. The switch opens when hydraulic pressure drops to 3150 ± 350 kPa (460 ± 50 psi).

Downloaded from www.Manualslib.com manuals search engine

Steering Linkage

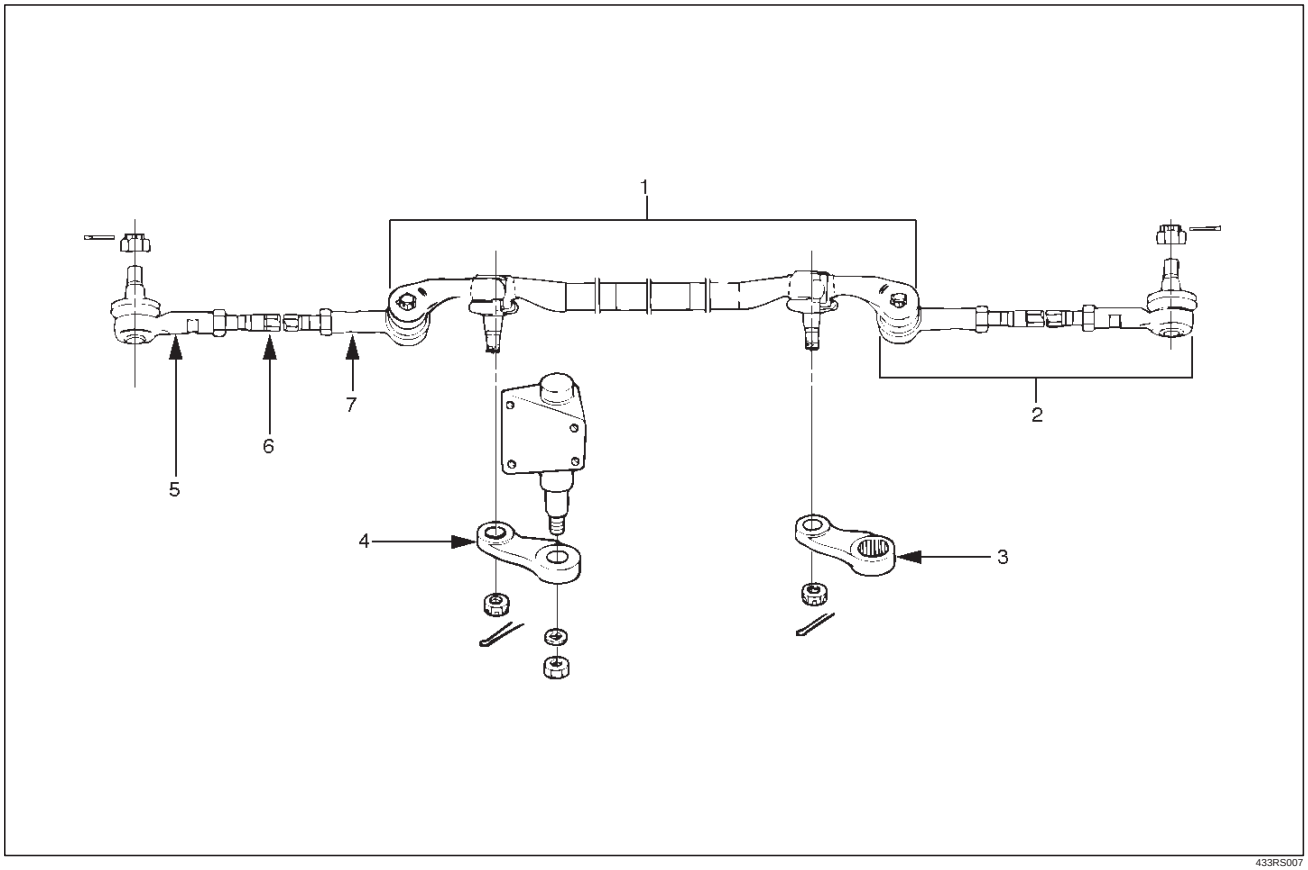

Legend

(1) Center Track Rod Assembly
(2) Outer Track Rod Assembly
(3) Pitman Arm
(4) Relay Lever
(5) Rod End,Outer
(6) Track Rod
(7) Rod End,Inner

The steering linkage consists of a pitman arm, relay lever, center track rod, and two adjustable outer track rods.
When the steering wheel is turned, the gear rotates the pitman arm which forces the center track rod to one side. The outer track rods, connected to the center track rod by ball studs, transfers the steering force to the wheels. The outer track rods are adjustable and are used for toe-in adjustments. The center track rod is supported by the pitman arm and relay lever. The relay lever pivots on a support attached to the frame.
The overall condition of the steering linkage affects steering performance. If parts are bent, damaged, worn or poorly lubricated, improper and possibly dangerous steering action will result.
Whenever any steering linkage components are repaired or replaced, check the steering geometry and front end alignment. Refer to Front End Alignment Inspection and Adjustment in this section.

Downloaded from www.Manualslib.com manuals search engine

Steering Column

WARNING: TO AVOID DEPLOYMENT WHEN TROUBLE-SHOOTING THE SRS SYSTEM, DO NOT USE ELECTRICAL TEST EQUIPMENT, SUCH AS BATTERY-POWERED OR A/C-POWERED VOLT-METER, OHMMETER, ETC., OR ANY TYPE OF ELECTRICAL EQUIPMENT OTHER THAN SPECIFIED IN THIS MANUAL. DO NOT USE A NON-POWERED PROBE-TYPE TESTER.

INSTRUCTION IN THIS MANUAL MUST BE FOLLOWED CAREFULLY, OTHERWISE PERSONAL INJURY MAY RESULT.

When servicing a vehicle equipped with Supplemental Restraint System, pay close attention to all WARNINGS and CAUTIONS.
For detailed explanation about SRS, refer to Restraints section.
The steering column has three important features in addition to the steering function:

1. The column is energy absorbing, designed to compress in a front-end collision to minimize the possibility of injury to the driver of the vehicle.
2. The ignition switch and lock are mounted conveniently on the column.
3. With the column mounted lock, the ignition and steering operation can be locked to prevent theft of the vehicle.

The column can be disassembled and reassembled. However, to ensure the energy absorbing action, use only the specified screws, bolts and nuts as designated, and tighten them to the specified torque.
Handle the column with care when it is removed from the vehicle. A sharp blow on the end of steering shaft or shift lever, or dropping the assembly could shear or loosen the fasteners that maintain column rigidity.

Diagnosis

Since the problems in steering, suspension, wheels and tires involve several systems, they must all be considered when diagnosing a complaint. To identify the symptom, always road test the vehicle first. Proceed with the following preliminary inspections and correct any defects which are found.

1. Inspect tires for proper pressure and uneven wear.
2. Raise vehicle on a hoist, then inspect front and rear suspension and steering linkage for loose or damaged parts.
3. Spin the front wheels. Inspect for out-of-round tires, out-of-balance tires, loose and/or rough wheel bearings.

General Diagnosis

Condition	Possible cause	Correction
Vehicle Pulls	Mismatched or uneven tires.	Replace tire.
	Tires not adequately inflated.	Adjust tire pressure.
	Broken or sagging springs.	Replace spring.
	Radial tire lateral force.	Replace tire.
	Improper wheel alignment.	Adjust wheel alignment.
	Brake dragging in one wheel.	Repair brake.
	Loose, bent or broken front or rear suspension parts.	Tighten or replace the appropriate suspension part(s).
	Faulty shock absorbers.	Replace shock absorber.
Abnormal or Excessive Tire Wear	Sagging or broken spring.	Replace spring.
	Tire out of balance.	Balance or replace tire.
	Improper wheel alignment.	Check front end alignment.
	Faulty shock absorber.	Replace shock absorber.
	Hard driving.	Replace tire.
	Overloaded vehicle.	Replace tire and reduce load.
	Tires not rotated periodically.	Replace or rotate tire.
	Worn or loose road wheel bearings.	Replace wheel bearing.
	Wobbly wheel or tires.	Replace wheel or tire.
	Tires not adequately inflated.	Adjust the pressure.
Wheel Hop	Blister or bump on tire.	Replace tire.
	Improper shock absorber operation.	Replace shock absorber.

Downloaded from www.Manualslib.com manuals search engine

Condition	Possible cause	Correction
Shimmy, Shake or Vibration	Tire or wheel out of balance.	Balance wheels or replace tire/or wheel.
	Loose wheel bearings.	Replace wheel bearing.
	Worn steering linkage ball joints.	Replace ball joints.
	Worn upper or lower ball joints.	Replace ball joints
	Excessive wheel runout.	Repair or replace wheel and/or tire.
	Blister or bump on tire.	Replace tire.
	Excessive loaded radial runout of tire/wheel assembly.	Replace tire or wheel.
	Improper wheel alignment.	Check wheel alignment.
	Loose or worn steering linkage.	Tighten or replace steering linkage.
	Loose steering gear.	Tighten housing bolts.
	Tires not adequately inflated.	Adjust tire pressure.
	Loose, bent or broken front or rear suspension parts.	Tighten or replace the appropriate suspension parts.
	Faulty shock absorber.	Replace shock absorber.
	Hub bearing preload misadjustment.	Adjust preload.
Hard Steering	Bind in steering linkage ball studs, upper or lower ball joint.	Replace ball joint.
	Improper wheel alignment.	Check wheel alignment.
	Steering gear misadjustment.	Check and adjust pinion torque.
	Tire not adequately inflated.	Inflate tires to proper pressure.
	Bind in steering column or shaft.	Repair or replace.
	Improper power steering system operation.	Repair or replace. Refer to “Power steering system diagnosis”
Too Much Play In Steering	Wheel bearings worn.	Replace wheel bearings.
	Loose steering gear or linkage.	Retighten or repair.
	Steering gear misadjustment.	Inspect and adjust steering gear preload.
	Worn or loose steering shaft universal joint.	Retighten or replace steering shaft.
	Worn steering linkage ball joints.	Replace ball joints.
	Worn upper or lower ball joints.	Replace ball joints.
Poor Steering Wheel Returnability	Bind in steering linkage ball joints.	Replace ball joints.
	Bind in upper or lower ball joints.	Replace ball joints.
	Bind in steering column and shaft.	Repair or replace.
	Bind in steering gear.	Check and repair steering gear.
	Improper wheel alignment.	Adjust wheel alignment.
	Tires not adequately inflated.	Adjust tire pressure.
	Loose steering wheel nut.	Retighten.
	Worn wheel bearing.	Replace.

Downloaded from www.Manualslib.com manuals search engine

Condition	Possible cause	Correction
Abnormal Noise	Worn, sticky or loose upper or lower ball joint, steering linkage ball joints or drive axle joints.	Replace.
	Faulty shock absorbers.	Replace.
	Worn upper or lower control arm bushing.	Replace.
	Loose stabilizer bar.	Retighten bolts or replace bushings.
	Loose wheel nuts.	Tighten nuts. Check for elongated wheel nut holes. Replace wheel if required.
	Loose suspension bolts or nuts.	Retighten suspension bolts or nuts.
	Broken or otherwise damaged wheel bearings.	Replace wheel bearing.
	Broken suspension springs.	Replace spring.
	Loose steering gear.	Retighten mounting bolt.
	Faulty steering gear.	Check and adjust steering gear.
Wandering or Poor Steering Stability	Mismatched or unevenly worn tires.	Replace tire or inflate tires to proper pressure.
	Loose steering linkage ball joints.	Replace ball joints.
	Faulty shock absorbers.	Replace shock absorber.
	Loose stabilizer bar.	Tighten or replace stabilizer bar or bushings.
	Broken or sagging springs.	Replace spring (pairs).
	Steering gear misadjustment.	Check or adjust steering gear.
	Improper wheel alignment.	Adjust wheel alignment.
Erratic Steering When Braking	Worn wheel bearings.	Replace wheel bearings.
	Broken or sagging springs.	Replace spring (pairs).
	Leaking caliper.	Repair or replace caliper.
	Warped discs.	Replace brake disc.
	Badly worn brake pads.	Replace brake pads.
	Tires are inflated unequally.	Inflate tires to proper pressure.

Downloaded from www.Manualslib.com manuals search engine

Power Steering System

There is some noise in all power steering systems. One of the most common is a hissing sound when the steering wheel is fully turned and the car is not moving. This noise will be most evident when the steering wheel is operated while the brakes are applied. There is no relationship between this noise and steering performance. Do not replace the valve unless the "hissing" noise is extremely objectionable. A replacement valve will also have a slight noise, and is not always a cure for the condition.

Condition	Possible cause	Correction
Rattle or Chucking Noise	Pressure hose touching other parts of vehicle.	Adjust hose position. Do not bend tubing by hand.
	Tie rod ends loose.	Tighten or replace tie rod end.
	Loose steering gear mounting.	Tighten steering gear mounting.
	Steering gear misadjustment.	Check and adjust steering gear preload.
Poor Return of Steering Wheel to Center	Improper front wheel alignment.	Adjust front wheel alignment.
	Wheel bearing worn.	Replace front wheel bearing.
	Tie rod end binding.	Replace tie rod end.
	Ball joint binding.	Replace ball joint.
	Tight or frozen steering shaft bearing.	Replace steering assembly.
	Steering gear misadjustment.	Adjust the steering gear.
	Sticky or plugged steering gear valve.	Repair or replace steering gear valve.
	Entry of air in the power steering system.	Bleed the system.
Momentary Increase In Effort When Turning Wheel Fast To Right or Left	High internal leakage.	Repair steering gear.
	Power steering fluid level low.	Replenish fluid.
Steering Wheel Surges or Jerks When Turning Especially During Parking	Insufficient pump pressure.	Repair pump assembly.
	Sticky steering gear valve.	Repair or replace steering gear.
	Power steering fluid level low.	Replenish fluid.
Excessive Wheel Kick Back or Loose Steering	Air in system.	Bleed hydraulic system.
	Tie rod end loose.	Tighten tie rod end.
	Wheel bearing worn.	Replace wheel bearing.
Hard Steering or Lack of Power Assist	Sticky steering gear valve.	Repair or replace steering gear valve.
	Insufficient pump pressure.	Repair pump assembly.
	Excessive internal pump leakage.	Repair pump assembly.
	Excessive internal steering gear leakage.	Repair steering gear.
	Power steering fluid level low.	Replenish fluid.
Unstable Engine Idling or Stalling When Turning	Pressure switch of the power steering pump or its harness is faulty.	Repair or replace.

Downloaded from www.Manualslib.com manuals search engine

Power Steering Pump

Foaming milky power steering fluid, low fluid level, and possible low pressure can be caused by air in the fluid, or loss of fluid due to internal pump leakage. Check for leak and correct. Bleed the system. Extremely cold temperatures will cause air bubbles in the system if the fluid level is low. If the fluid level is correct and the pump still foams, remove the pump from the vehicle and check the housing for cracks. If the housing is cracked, replace the pump housing.

Condition	Possible cause	Correction
Low Pressure Due to Steering Pump	Relief valve sticking or inoperative.	Replace relief valve.
	Side plate not flat against cam ring.	Replace side plate.
	Extreme wear of cam ring.	Replace cam ring.
	Scored side plate or rotor.	Replace side plate or rotor.
	Vanes sticking in rotor slots.	Repair or replace vanes and rotor.
	Cracked or broken side plate.	Replace side plate.
	High internal leakage.	Repair internal leakage.
Low Pressure Due to Steering Gear	Scored housing bore.	Replace housing.
Growling Noise In Steering Pump	Excessive back pressure in hoses or steering unit caused by restriction.	Repair steering unit or pump.
	Scored side plate or rotor.	Replace side plate or rotor.
	Worn cam ring.	Replace cam ring.
Groaning Noise In Steering Pump	Air in the fluid.	Bleed hydraulic system.
	Low fluid level.	Replenish fluid.
	Pump mounting loose.	Tighten mounting bolt.
Rattling Noise In Steering Pump	Vanes sticking in rotor slots.	Repair or replace vanes and rotor.
	Vane improperly installed.	Repair rotor and vane.
Swishing Noise In Steering Pump	Damaged relief valve.	Replace relief valve.
Whining Noise In Steering Pump	Scored side plate and vanes.	Replace side plate and vanes.

Steering Column Lock System

Condition	Possible cause	Correction
Will Not Unlock	Damaged lock cylinder.	Replace lock cylinder.
	Damaged park lock cable.	Replace park lock cable.
Will Not Lock	Lock spring broken or worn.	Replace lock cylinder.
	Damaged lock cylinder.	Replace lock cylinder.
	Ignition switch stuck.	Repair or replace ignition switch.
	Park lock cable damaged.	Replace park lock cable.
Key Cannot be Removed in “OFF-LOCK”	Ignition switch is not set correctly.	Correct ignition switch.
	Damaged lock cylinder.	Replace lock cylinder.
	Faulty shift lock mechanism.	Repair or replace the shift lock mechanism.

Column

Condition	Possible cause	Correction
Noise in Column	Universal joint loose.	Tighten joint.
	Shaft lock snap ring not seated.	Place snap ring in proper position.

Downloaded from www.Manualslib.com manuals search engine

Turn Signal Switch

This diagnosis covers mechanical problems only. Refer to Turn Signal Switch in Electrical section for electrical diagnosis.

Condition	Possible cause	Correction
Turn Signal Will Not Stay In Turn Position	Foreign material or loose parts preventing movement of yoke.	Repair or replace signal switch.
	Broken or missing detent or canceling spring.	Replace signal switch.
Turn Signal Will Not Cancel	Loose switch mounting screws.	Tighten mounting screws.
	Switch or anchor bosses broken.	Replace turn signal switch.
	Broken, missing or out of position detent, return or canceling spring.	Replace turn signal switch.
	Worn canceling cam.	Replace turn signal switch.
Turn Signal Difficult To Operate	Turn signal switch arm loose.	Tighten arm screw.
	Broken or distorted yoke.	Replace turn signal switch.
	Loose or misplaced springs.	Replace turn signal switch.
	Foreign parts and/or material.	Repair turn signal switch.
	Loose turn signal switch mounting screws.	Tighten mounting screws.
Turn Signal Will Not Indicate Lane Change	Broken lane change pressure pad or spring hanger.	Replace turn signal switch.
	Broken, missing or misplaced lane change spring.	Replace turn signal switch.
	Base of wire damaged.	Replace turn signal switch.
Hazard Switch Cannot Be Turned Off	Foreign material between hazard switch to turn signal switch body.	Repair or replace hazard switch.
No Turn Signal Lights	Electrical failure in chassis harness.	Refer to Electrical section.
	Inoperative turn signal flasher unit.	Replace flasher unit.
	Loose chassis harness connector.	Repair loose connector.
Front or Rear Turn Signal Lights Not Flashing	Burned-out or damaged turn signal bulb.	Replace bulb.
	High resistance connection to ground at bulb socket.	Repair bulb socket.
	Loose chassis harness connector.	Repair loose connector.

Downloaded from www.Manualslib.com manuals search engine

Power Steering System Test

Test Procedure

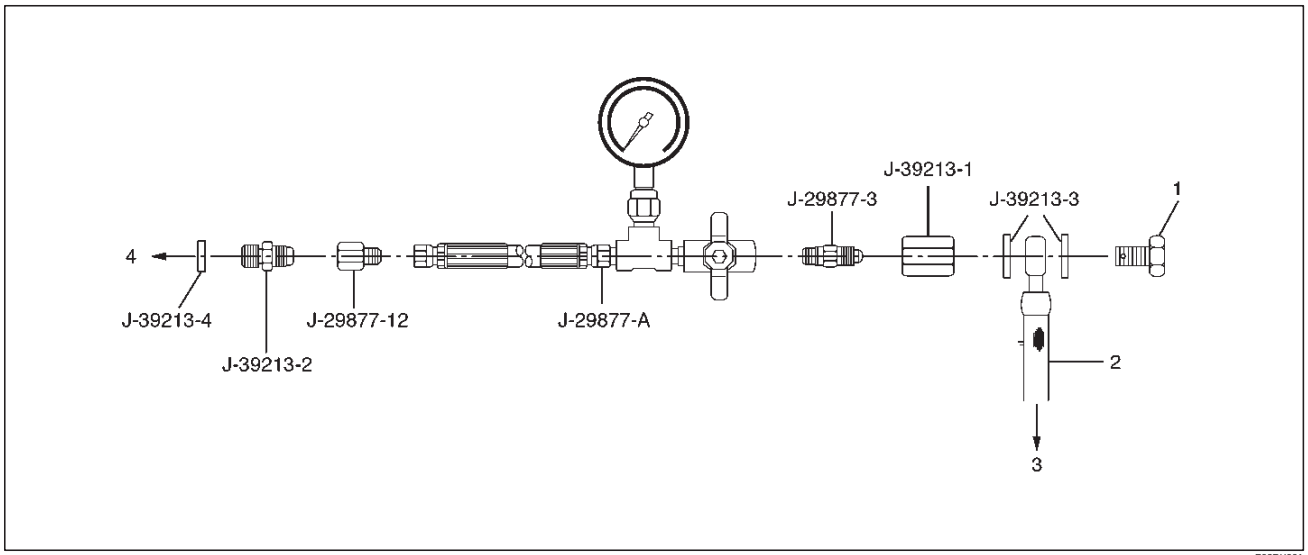

F02RX001

Legend

(1) Bolt (M16 × 1.5)
(2) Hose (Vehicle Side)
(3) To Power Steering Gear
(4) To Power Steering Pump

Test of fluid pressure in the power steering system is performed to determine whether or not the oil pump and power steering unit are functioning normally.
The power steering system test is the method used to identify and isolate hydraulic circuit difficulties. Prior to performing this test, the following inspections and corrections, if necessary, must be made.

- Inspect pump reservoir for proper fluid level.
- Inspect pump belt for proper tension.
- Inspect pump driver pulley condition.

1. Place a container under the pump to catch the fluid when disconnecting or connecting the hoses.
2. With the engine NOT running,disconnect the pressure hose at the power steering pump and install power steering tester J-29877-A. The gauge must be between the shutoff valve and pump. Open the shutoff valve.
3. Check the fluid level. Fill the reservoir with power steering fluid, to the “Full” mark. Start the engine, then turn the steering wheel and momentarily hold it against a stop (right or left). Turn the engine off and check the connections at tester for leakage.
4. Bleed the system. Refer to Bleeding the Power Steering System in this section.
5. Start the engine and check the pump fluid level. Add power steering fluid if required. When the engine is at normal operating temperature, increase engine speed to 1500 rpm.

CAUTION: Do not leave shutoff valve fully closed for more than 5 seconds, as the pump could become damaged internally.

6. Fully close the shutoff valve. Record the highest pressures.
   - If the pressure recorded is within 9300–9800 kPa (1350–1420 psi), the pump is functioning within its specifications.
   - If the pressure recorded is higher than 9800 kPa (1420 psi), the valve in the pump is defective.
   - If the pressure recorded is lower than 9300 kPa (1350 psi), the valve or the rotating group in the pump is defective.

Downloaded from www.Manualslib.com manuals search engine

7. If the pump pressures are within specifications, leave the valve open and turn (or have someone else turn) the steering wheel fully in both directions. Record the highest pressures and compare with the maximum pump pressure recorded in step 6. If this pressure cannot be built in either side of the power steering gear, the power steering gear is leaking internally and must be disassembled and repaired.
8. Shut the engine off, remove the testing gauge.
9. Reconnect the pressure hose, check the fluid level and make the needed repairs.
10. If the problem still exists, the steering and front suspension must be thoroughly examined.

Maintenance

The hydraulic system should be kept clean and fluid level in the reservoir should be checked at regular intervals and fluid added when required. Refer to Recommended Fluids and Lubricants in General Information section for the type of fluid to be used and the intervals for filling.

If the system contains some dirt, flush it as described in this section. If it is exceptionally dirty, both the pump and the gear must be completely disassembled before further usage.

All tubes, hoses, and fittings should be inspected for leakage at regular intervals. Fittings must be tight. Make sure the clips, clamps and supporting tubes and hoses are in place and properly secured.

Power steering hoses and lines must not be twisted, kinked or tightly bent. Air in the system will cause spongy action and noisy operation. When a hose is disconnected or when fluid is lost, for any reason, the system must be bled after refilling. Refer to Bleeding the Power Steering System in this section.

- Inspect belt for tightness.
- Inspect pulley for looseness or damage. The pulley should not wobble with the engine running.
- Inspect hoses so they are not touching any other parts of the vehicle.
- Inspect fluid level and fill to the proper level.

Fluid Level

1. Run the engine until the power steering fluid reaches normal operating temperature, about 55˚C (130˚F), then shut the engine off.
2. Check the level of fluid in the reservoir.
3. If the fluid level is low, add power steering fluid as specified in General Information to the proper level and install the receiver cap.
4. When checking the fluid level after the steering system has been serviced, air must be bled from the system. Refer to Bleeding the Power Steering System in this section.

Bleeding The Power Steering System

When a power steering pump or gear has been installed, or an oil line has been disconnected, the air that has entered the system must be bled out before the vehicle is operated. If air is allowed to remain in the power steering fluid system, noisy and unsatisfactory operation of the system may result.

Bleeding Procedure

When bleeding the system, and any time fluid is added to the power steering system, be sure to use only power steering fluid as specified in General Information.

1. Fill the pump fluid reservoir to the proper level and let the fluid settle for at least two minutes.
2. Start the engine and let it run for a few seconds. Do not turn the steering wheel. Then turn the engine off.
3. Add fluid if necessary.
4. Repeat the above procedure until the fluid level remains constant after running the engine.
5. Raise and support the front end of the vehicle so that the wheels are off the ground.
6. Start the engine. Slowly turn the steering wheel right and left, lightly contacting the wheel stops.
7. Add power steering fluid if necessary.
8. Lower the vehicle, set the steering wheel at the straight forward position after turning it to its full steer positions 2 or 3 times, and stop the engine.
9. Check the fluid level and refill as required.
10. If the fluid is extremely foamy, allow the vehicle to set a few minutes, then repeat the above procedure.

Flushing The Power Steering System

1. Raise and support the front end of the vehicle off the ground until the wheels are free to turn.
2. Remove the fluid return line at the pump inlet connector and plug the connector port on the pump.

   Position the line toward a large container to catch the draining fluid.
3. While running the engine at idle, fill the reservoir with new power steering fluid. Turn the steering wheel in both directions. Do not contact or hold the steering wheel to the wheel stops. This will cause the pump to go to pressure relief mode, which may cause a sudden fluid overflow at the reservoir.

Downloaded from www.Manualslib.com manuals search engine

4. Install all the lines and hoses. Fill the system with new power steering fluid and bleed the system as described in Bleeding The Power Steering System. Operate the engine for about 15 minutes.

   Remove the pump return line at the pump inlet and plug the connection on the pump. While refilling the reservoir, check the draining fluid for contamination. If foreign material is still evident, replace all lines, disassemble and clean or replace the power steering system components. Do not re-use any drained power steering fluid.

Steering Wheel Free Play Adjustment

Inspection

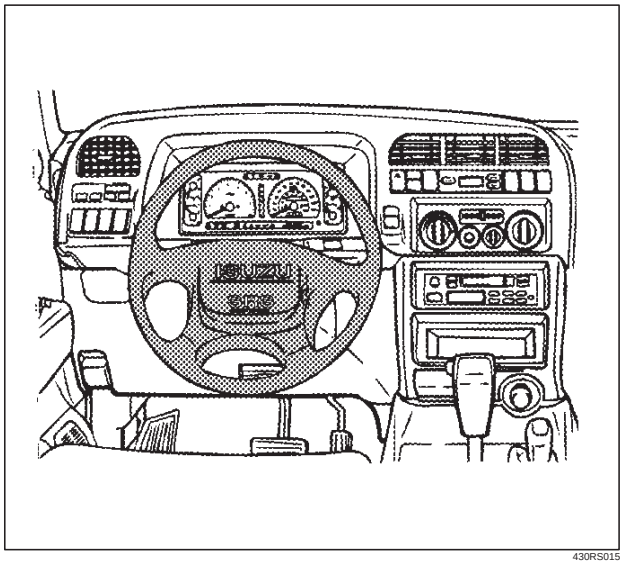

430RS015

1. With the tires in the straight-ahead position, check the amount of steering wheel play by turning the wheel in both directions until the tires begin to move.

NOTE: The wheel free play should be checked with the engine running.

Free play: 0 – 30 mm (0 – 1.18 in)

2. Also check the steering wheel for play and looseness in the mount by moving it back and forth and sideways. When test driving, check for hard steering, steering shimmy and tendency to pull to one side.

Adjustment

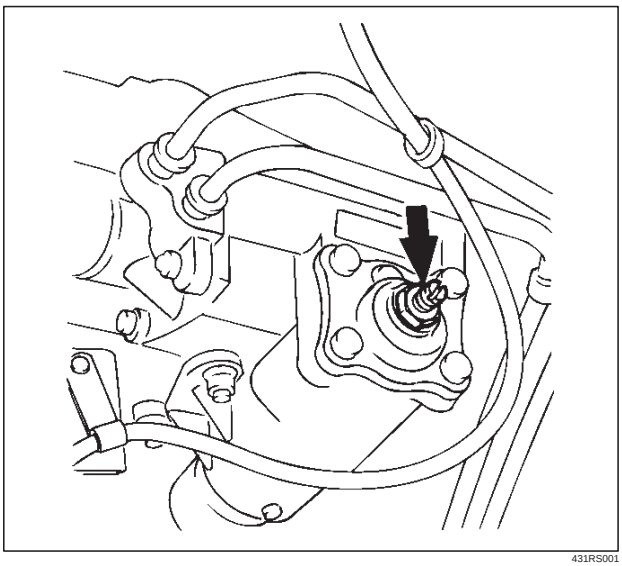

431RS001

1. Align the front wheels properly in the straight ahead position.
2. Loosen the lock nut on the adjusting screw of the steering gear.
3. Turn the adjust screw clockwise to decrease free play or counter-clockwise to increase.
4. After check of specified free play, tighten the lock nut to specified torque.

Torque: 41 N·m (30 lb ft)

Front End Alignment Inspection and Adjustment

General Description

“Front End Alignment” refers to the angular relationship between the front wheels, the front suspension attaching parts and the ground.

Proper front end alignment must be maintained in order to insure efficient steering, good directional stability and to prevent abnormal tire wear.

The most important factors of front end alignment are wheel toe-in, wheel camber and axle caster.

Downloaded from www.Manualslib.com manuals search engine

Camber:

This illustration is viewed from the front of the vehicle.

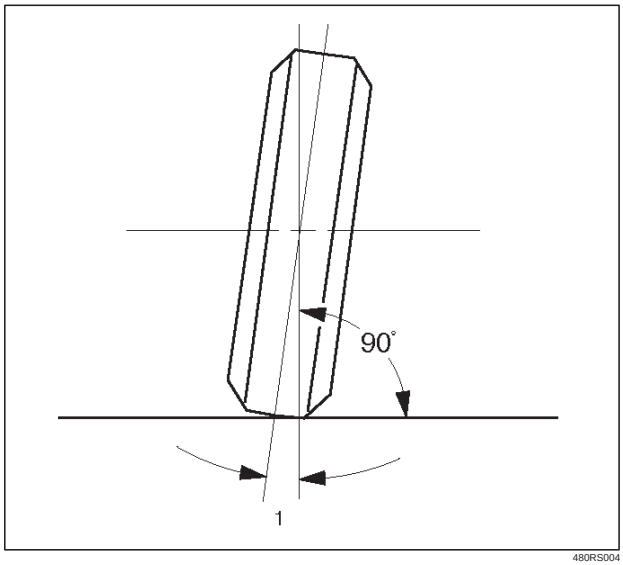

480RS004

Camber is the vertical tilting inward or outward of the front wheels. When the wheels tilt outward at the top, the camber is positive (+). When the wheels tilt inward at the top, the camber is negative (–). The amount of tilt measured in degrees from the vertical is called the camber angle (1). If camber is extreme or unequal between the wheels, improper steering and excessive tire wear will result. Negative camber causes wear on the inside of the tire, while positive camber causes wear to the outside.

Caster:

This illustration is viewed from the side of the vehicle.

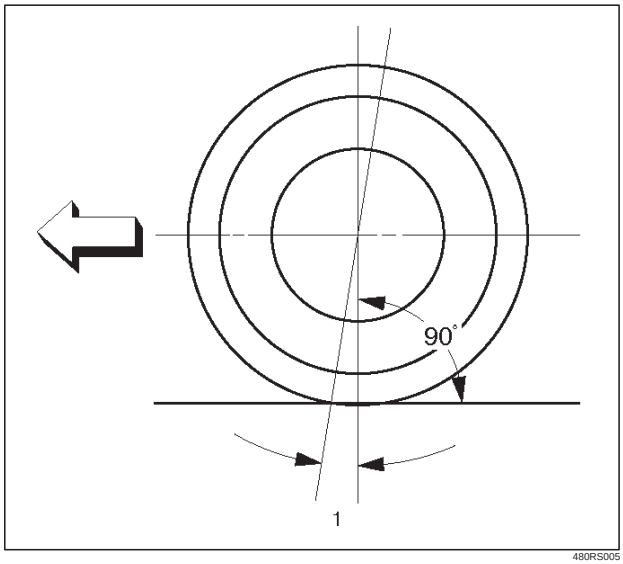

480RS005

Caster(1) is the vertical tilting of the wheel axis either forward or backward (when viewed from the side of the vehicle). A backward tilt is positive(+) and a forward tilt is negative (–). On the short and long arm type suspension you cannot see a caster angle without a special instrument, but if you look straight down from the top of the upper control arm to the ground, the ball joints do not line up (fore and aft) when a caster angle other than 0 degree is present. With a positive angle, the lower ball joint would be slightly ahead (toward the front of the vehicle) of the upper ball joint center line.

Toe-in:

This illustration is viewed from the top of the vehicle.

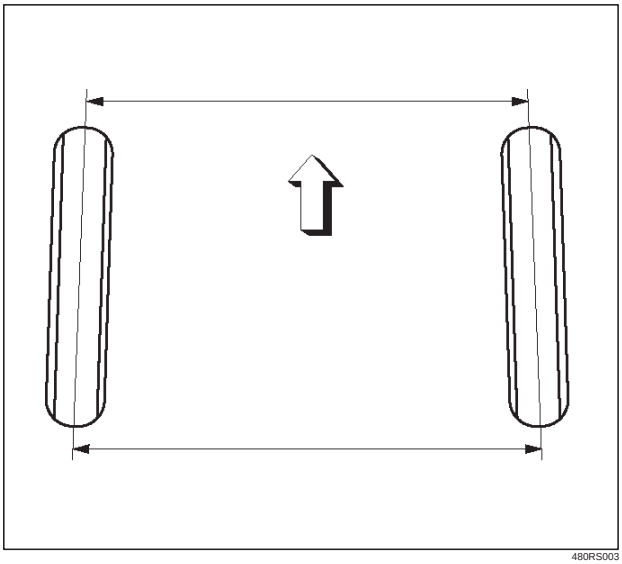

480RS003

Toe-in is the measured amount the front wheels are turned in. The actual amount of toe-in is normally a fraction of a degree. Toe-in is measured from the center of the tire treads or from the inside of the tires. The purpose of toe-in is to insure parallel rolling of the front wheels and to offset any small deflections of the wheel support system which occurs when the vehicle is rolling forward. Incorrect toe-in results in excessive toe-in and unstable steering. Toe-in is the last alignment to be set in the front end alignment procedure.

Inspection

Before making any adjustments affecting caster, camber or toe-in, the following front end inspection should be made.

1. Inspect the tires for proper inflation pressure. Refer to Main Data and Specifications in Wheel and Tire System section.
2. Make sure that the vehicle is unladen condition (With no passenger or loading).
3. Make sure that the spare tire is installed at the normal position.
4. Inspect the front wheel bearings for proper adjustment. Refer to Front Hub and Disc Overhaul in Suspension section.
5. Inspect the ball joints, tie rod ends and relay rods. If excessive looseness is noted, correct before adjusting. Refer to Steering Linkage in this section.

Downloaded from www.Manualslib.com manuals search engine

6. Inspect the wheels and tires for run-out. Refer to Wheel Replacement in Wheel and Tire System section.
7. Inspect the trim height. If not within specifications, the correction must be made before adjusting caster.
8. Inspect the steering gear for looseness at the frame.
9. Inspect the shock absorbers for leaks or any noticeable noise. Refer to Shock Absorber Replacement in Suspension section.
10. Inspect the control arms or stabilizer bar attachment for looseness. Refer to Suspension section .
11. Inspect the front end alignment using alignment equipment. Follow the manufacturer's instructions.
12. Park the vehicle must be on a level surface.

Trim Height Adjustment

Adjust the trim height(1) by means of the adjusting bolt on the height control arms.

CAUTION: When adjusting front end alignment, be sure to begin with trim height first, as it may change other adjusted alignments.

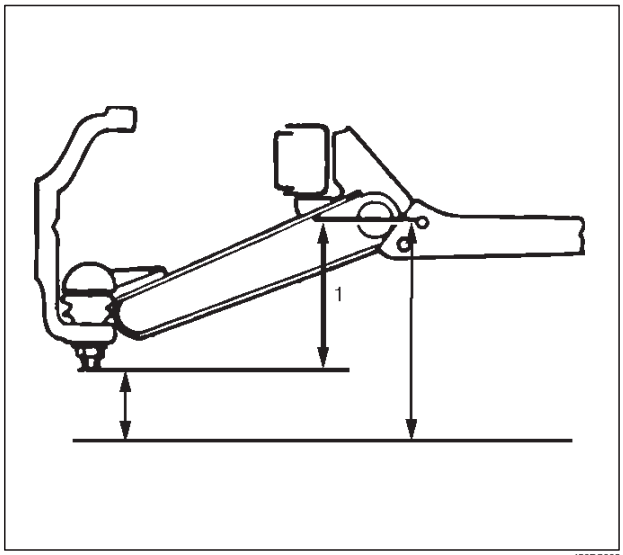

450RS003

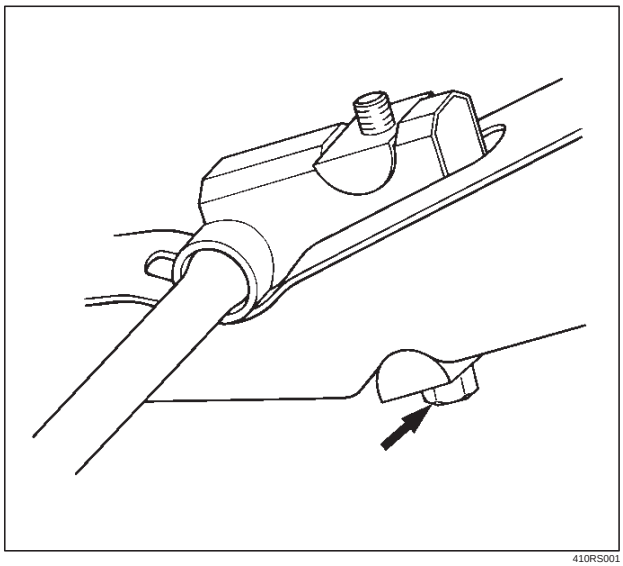

410RS001

1. Check and adjust the tire inflation pressures.
2. Park the vehicle on a level ground and move the front of the vehicle up and down several times to settle the suspension.
3. Make necessary adjustment with the adjusting bolt on the height control arms.

Trim height: 129 mm (5.08 in)

Caster Adjustment

The caster angle can be adjusted by means of the caster shims(1) installed between the chassis frame(2) and fulcrum pins.

Caster angle: 2˚10' ± 45'

CAUTION: Left and right side must be equal within 30'.

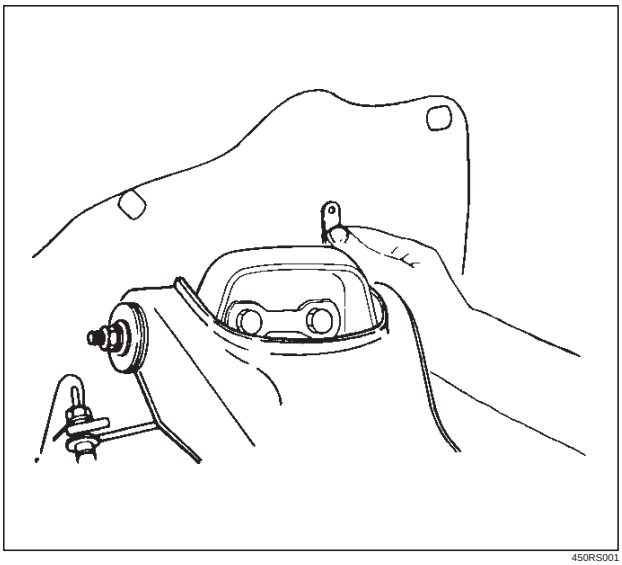

450RS001

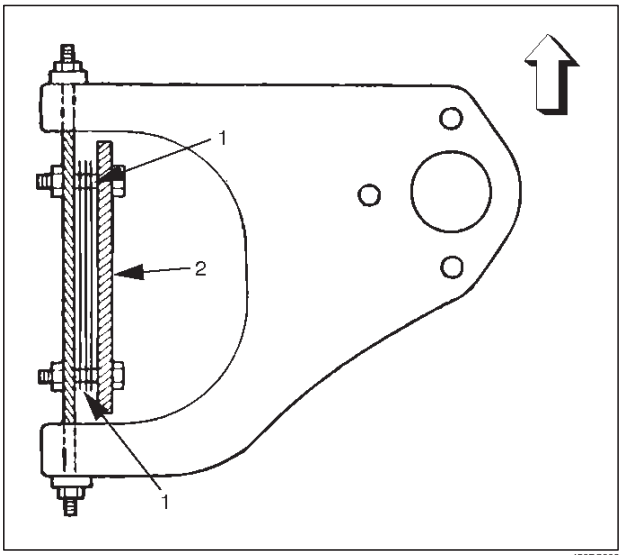

450RS002

NOTE: Difference of the caster shim front/rear thickness should be 3.6 mm (0.142 in) or less. Overall thickness of caster shim and camber shim should be 10.8 mm (0.425 in) or less.

Downloaded from www.Manualslib.com manuals search engine

Tighten the fulcrum pin bolt to the specified torque.

Torque: 152 N·m (112 lb ft)

Camber Adjustment

The camber angle can be adjusted by means of the camber shims(2) installed in position between the chassis frame(1) and fulcrum pins

Camber angle: 0° ± 30'

King pin inclination: 12°30' ± 30'

CAUTION: Left and right side must be equal within 30'.

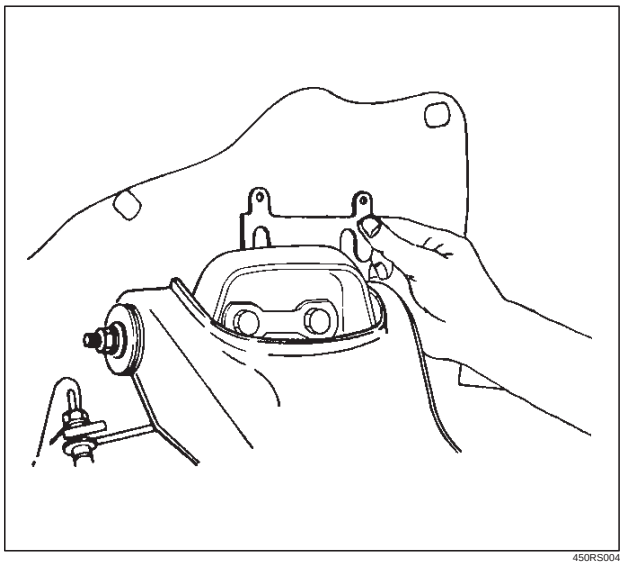

450RS004

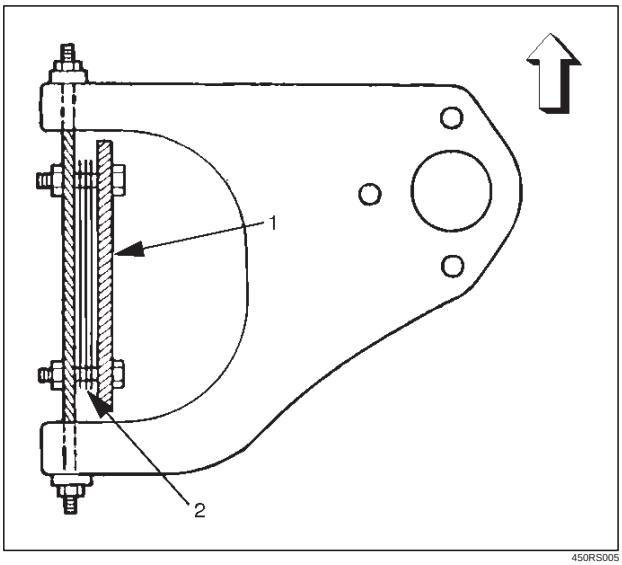

450RS005

NOTE: Overall thickness of caster shim and camber shim should be 10.8 mm (0.425 in) or less.

Tighten the fulcrum pin bolt to the specified torque.

Torque: 152 N·m (112 lb ft)

	Position of shims		Camber angle	Caster angle
	Front side	Rear side		
Caster shim	When added	When removed	Decreases	Decreases
	When removed	When added	Increases	Increases
	—	When removed	Unchanged	Decreases
	—	When added	Unchanged	Increases
Camber shim	When added		Decreases	Unchanged
	When removed		Increases	Unchanged

Downloaded from www.Manualslib.com manuals search engine

Toe-in Adjustment

1. To adjust the toe-in angle, loosen the lock nuts(2) on the outer track rods(1) and turn the outer track rods. Turn both rods the same amount, to keep the steering wheel centered .

   Toe-in: 0 ± 2 mm (0 ± 0.08 in)

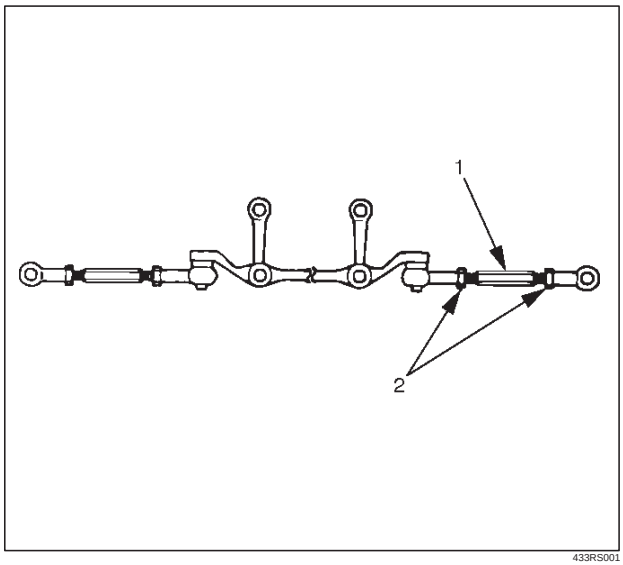

433RS001

2. Tighten the lock nut to the specified torque.

   Torque: 118 N·m (87 lb ft)

Maximum Steering Angle Adjustment

The maximum steering angle of the front wheels can be adjusted with the stop bolts under the frame side members.

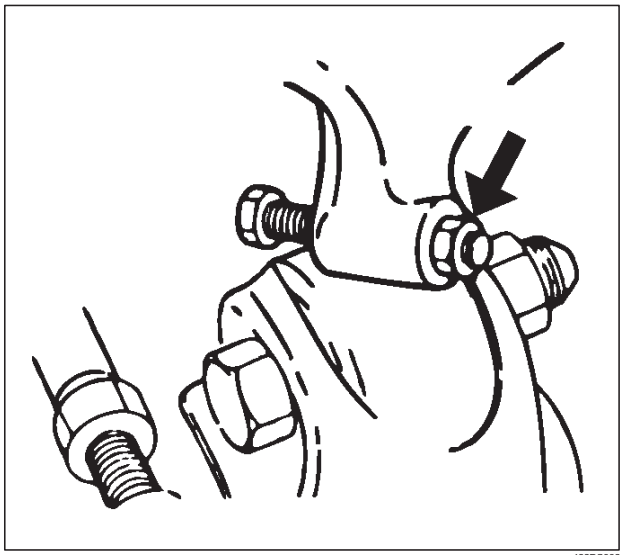

433RS002

1. Position each front wheel on the turning radius gauge in a straight-ahead position.
2. Set the parking brake firmly.
3. Adjust the inside wheel angle of each side with the stop bolts.

NOTE: The maximum protruding length(1) of stop bolt(3) from the lock nut(2) should be 10 mm or less

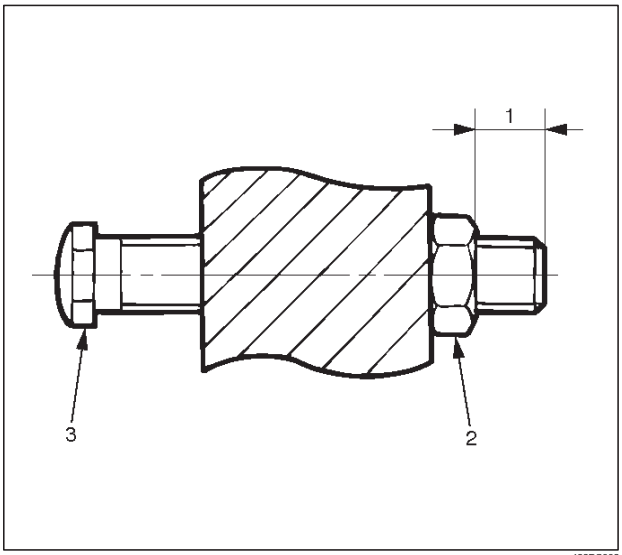

433RS003

4. Similarly adjust the inside wheel angle of the other side with stop bolt.

   Inside wheel: 34° (+0° to –2°)

   Outside wheel: 32°

NOTE: Maximum steering angles should be set after adjusting front wheel alignment.

5. If the stop between the lower link end and the knuckle comes ahead of the stop bolt, adjust the stop bolt so that inner stop bolt touches the drop arm (relay lever).

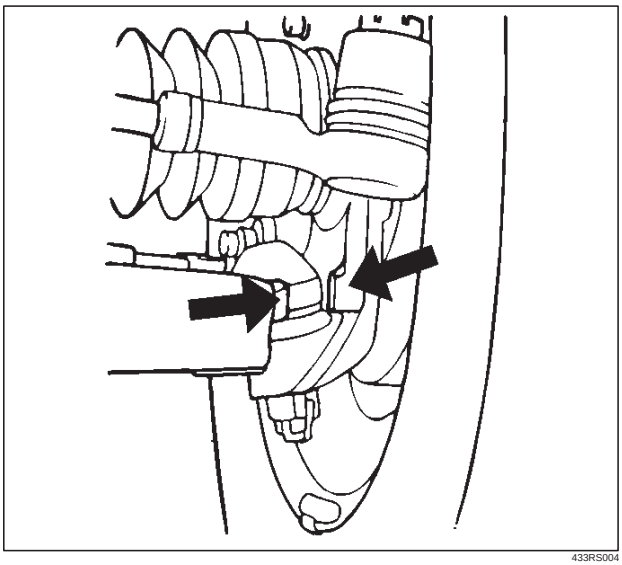

433RS004

6. Tighten the lock nut to the specified torque.

   Torque: 23 N·m (17 lb ft)

Downloaded from www.Manualslib.com manuals search engine

Main Data and Specifications

General Specification

Caster		2˚10’ ± 45’
Camber		0˚ ± 30’
King pin inclination		12˚30’ ± 30’
Toe-in		0 ± 2 mm (0 ± 0.08 in)
Max. steering angle	inside	34˚ (+0˚ to –2˚)
	outside	32˚

Torque Specification

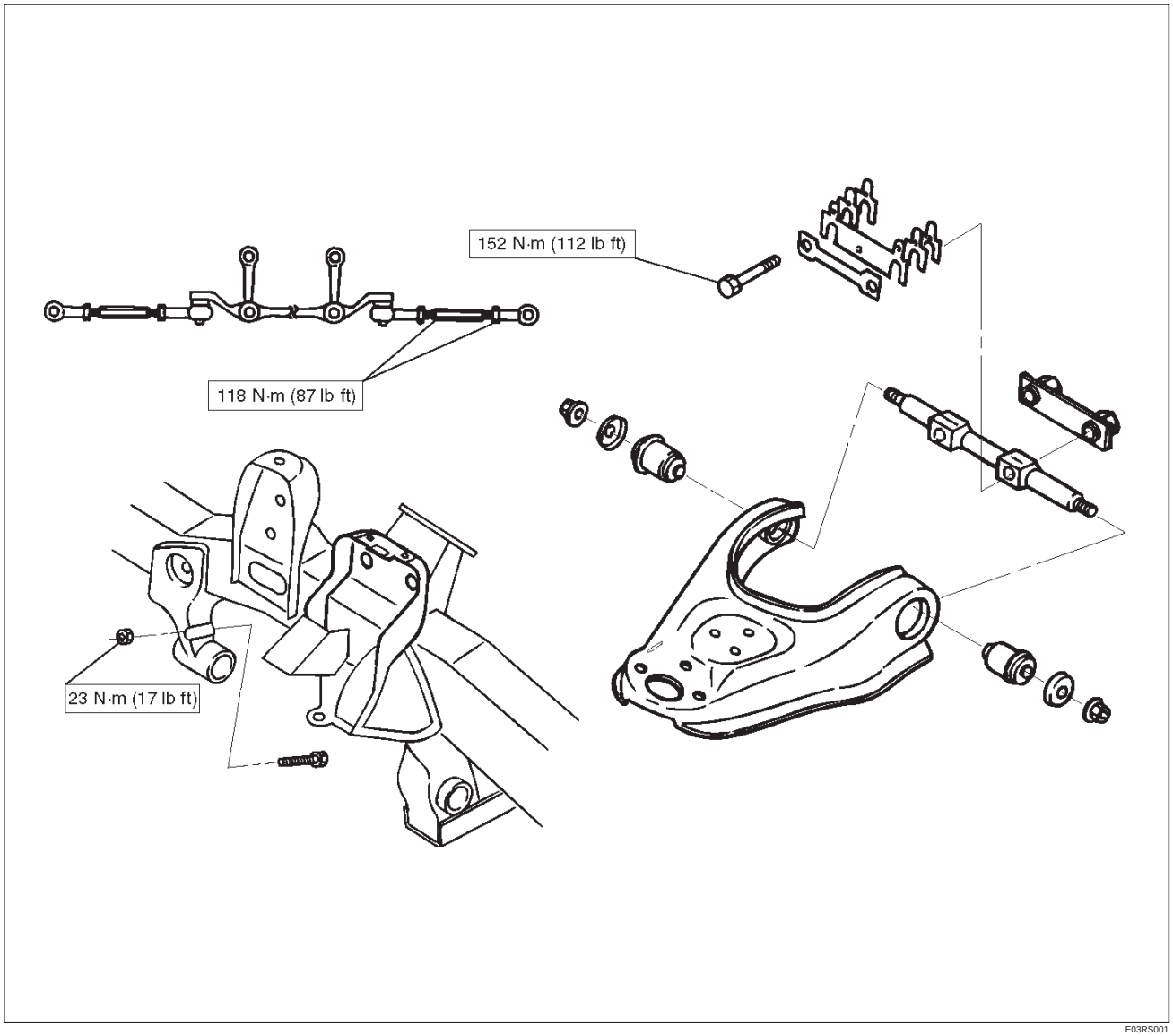

E03RS001

Downloaded from www.Manualslib.com manuals search engine

Special Tools

ILLUSTRATION	**TOOL NO.** TOOL NAME
901RS276	**J–29877–A** Tester: Power steering
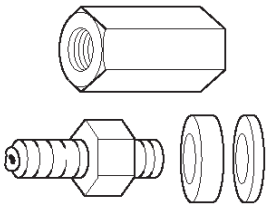 901RS278	**J–39213** Adapter: Power steering tester
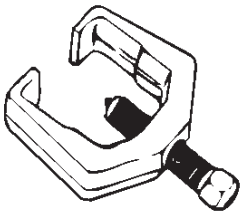 901RS279	**J–29107** Remover: Pitman arm
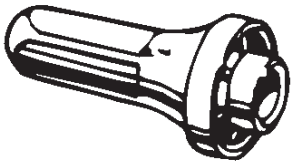 901RS280	**J–26508** Installer: Extension housing oil seal

Downloaded from www.Manualslib.com manuals search engine

Power Steering Gear

Power Steering Gear and Associated Parts

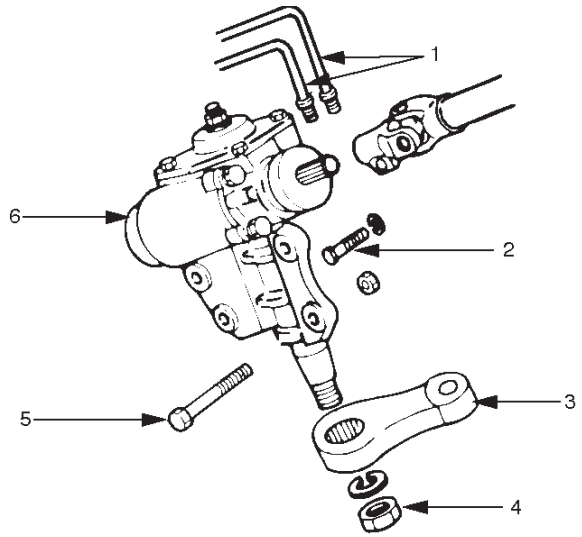

431RS002

Legend

(1) Pipe
(2) Universal Joint Bolt
(3) Pitman Arm
(4) Nut
(5) Gear Box Mounting Bolt and Nut
(6) Gear Box

Removal

1. Remove the stone guard.
2. Remove the lower fan shroud. Refer to Radiator in Engine section.
3. Disconnect stabilizer bar at the stabilizer links. Loosen stabilizer bracket fixing nuts.
4. Remove pipe.
5. Remove nut.
6. Use Pitman arm remover J–29107 to remove pitman arm.

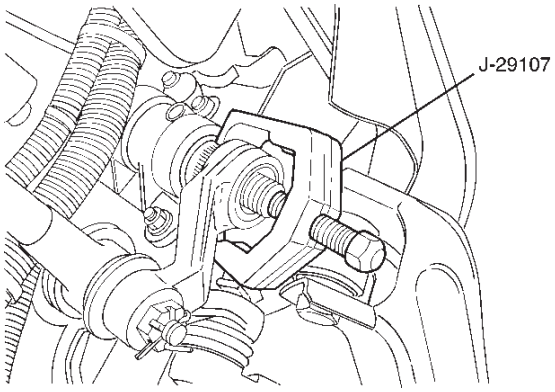

433RS005

Downloaded from www.Manualslib.com manuals search engine

7. Make a setting mark(1) across the coupling flange and worm shaft to ensure reassembly of the parts in the original position, then remove universal joint bolt.

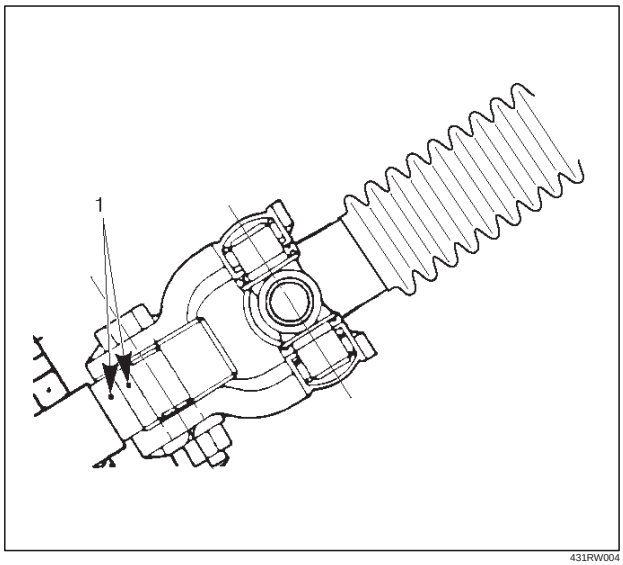

431RW004

8. Push the stabilizer bar aside and remove the gear box mounting bolts and nuts.

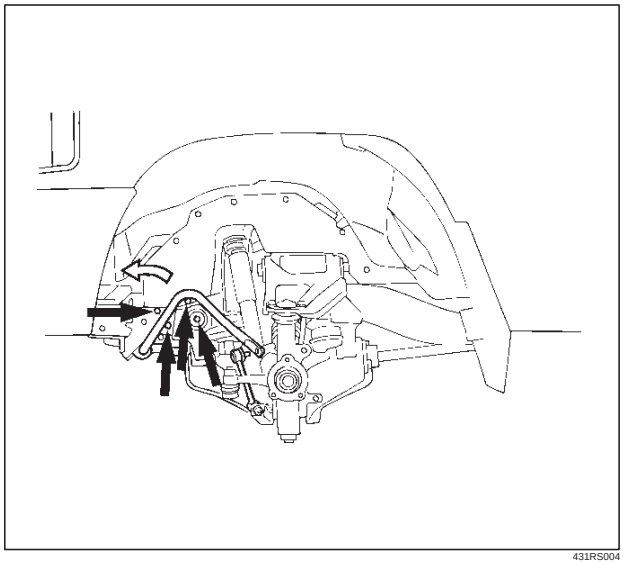

431RS004

9. Remove gear box.

Installation

1. Align the setting marks(1) made at removal, then install gear box.

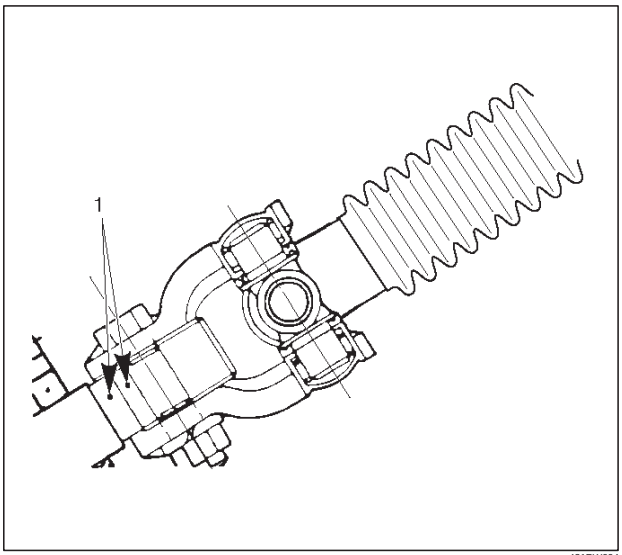

431RW004

2. Tighten gear box mounting bolt and nut to specified torque.

   Torque: 44 N·m (33 lb ft)

3. Tighten gear universal joint bolt to specified torque.

   Torque: 25 N·m (18 lb ft)

4. Align the notched tooth and install pitman arm.

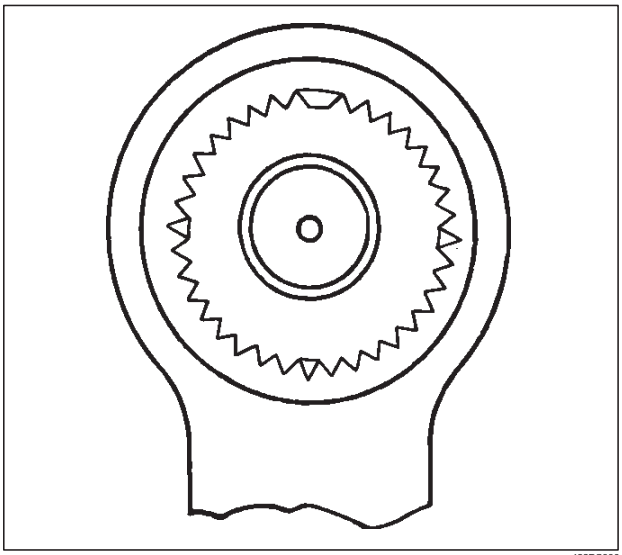

433RS006

5. Install nut and tighten Nut to specified torque.

   Torque: 216 N·m (159 lb ft)

6. Install Pipe and tighten to specified torque.

   Torque: 44 N·m (33 lb ft)

Downloaded from www.Manualslib.com manuals search engine

Steering Gear Disassembled View

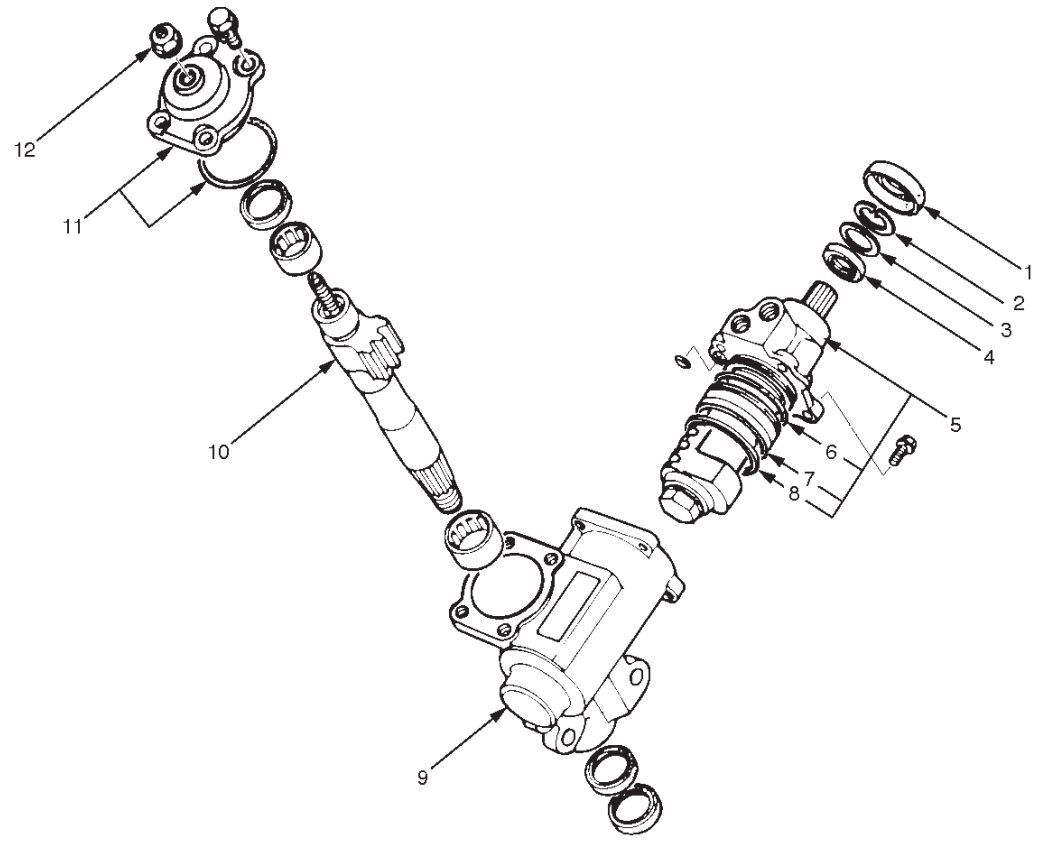

440RS001

Legend

(1) Dust Cover
(2) Retaining Ring
(3) Back Up Ring
(4) Oil Seal
(5) Ball-nut and Valve Housing Assembly
(6) O-ring
(7) Seal Ring
(8) O-ring
(9) Gear Box
(10) Sector Shaft
(11) Top Cover Assembly
(12) Lock Nut

Downloaded from www.Manualslib.com manuals search engine

Disassembly

CAUTION: Do not clamp the steering gear assembly in a vise by the power cylinder housing.

1. Remove dust cover.
2. Remove retaining ring.
3. Remove back up ring.
4. Remove oil seal.
   - Clean the faces of the extended stub shaft.
   - Plug the hose fitting on the inlet side.
   - Remove the oil seal by blowing compressed air through the hole in the outlet side.

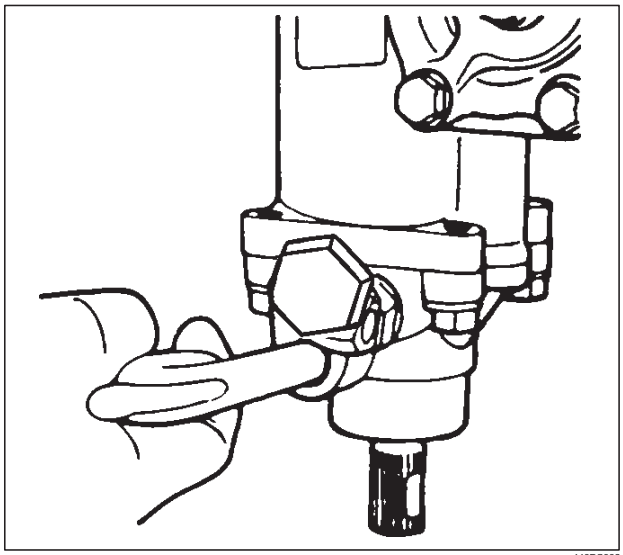

440RS002

5. Remove lock nut.
   - Remove the adjusting screw lock nut and turn the adjusting screw counter-clockwise to remove the preload between the sector gear and the rack piston.
6. Remove the top cover bolts and the top cover assembly.

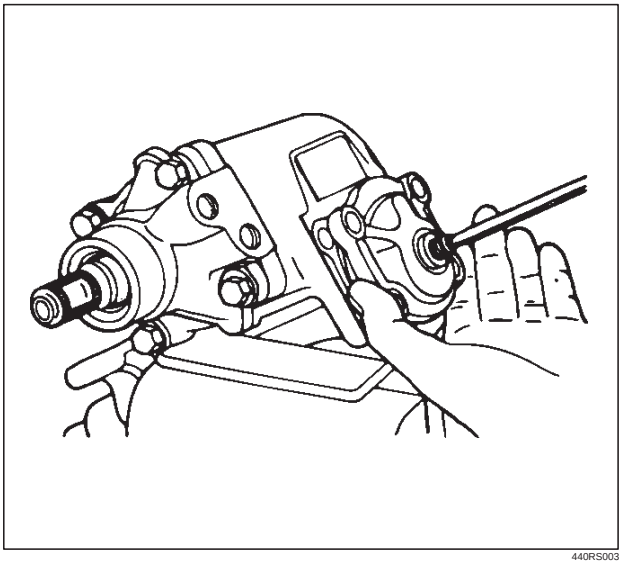

440RS003

   - Holding the top cover stationary, turn the adjusting screw clockwise to raise and free to cover, then remove the cover with O-ring.
7. Bring the stub shaft into straight-ahead position. Do not force the sector shaft off the gear box with a hammer or other impact tools then remove sector shaft.

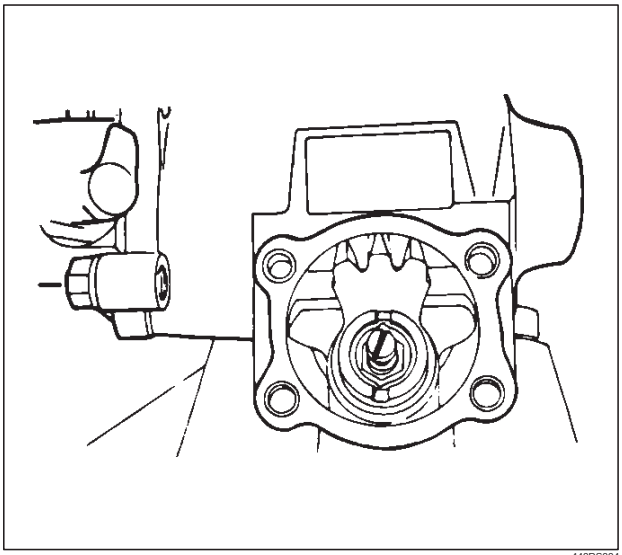

440RS004

Downloaded from www.Manualslib.com manuals search engine

8. Remove ball-nut and valve housing assembly.

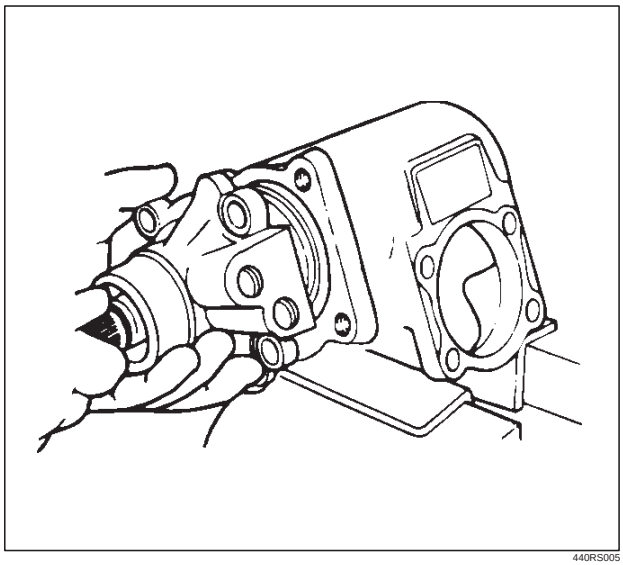

440RS005

- Always keep the ball nut and valve housing assembly in a horizontal position to prevent them from traveling to the end of the worm shaft and damaging the ball tubes.

9. Remove O-ring.
10. Remove seal ring.
11. Remove O-ring.
12. Remove gear box.

Inspection and Repair

Inspect the following parts for wear, damage or any other abnormal conditions.

- Bearing
- Ball-nut and valve housing
- Sector shaft
- Top cover
- Gear box
- Needle bearing
- Dust seal
- Seal ring
- Gasket

Ball-nut Rotation

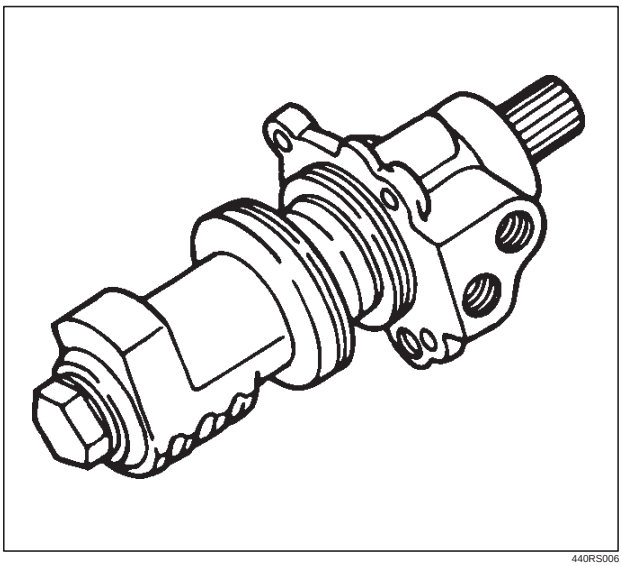

440RS006

Hold the ball nut and valve housing assembly vertically and see if the ball-nut lowers by turning smoothly. If the ball-nut does not lower smoothly, check the worm shaft for bending and foreign matter.

NOTE: When testing the ball nut and valve housing assembly, do not let it travel all the way to the end of worm shaft, or damage to the ball tubes will result.

- Check sector shaft outside diameter.

  Limit: 31.7 mm (1.25 in)

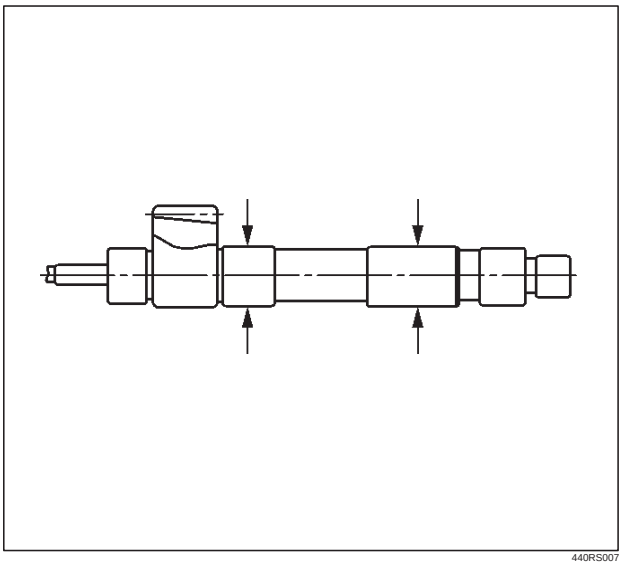

440RS007

Downloaded from www.Manualslib.com manuals search engine

Dust Seal and Seal Ring Setting

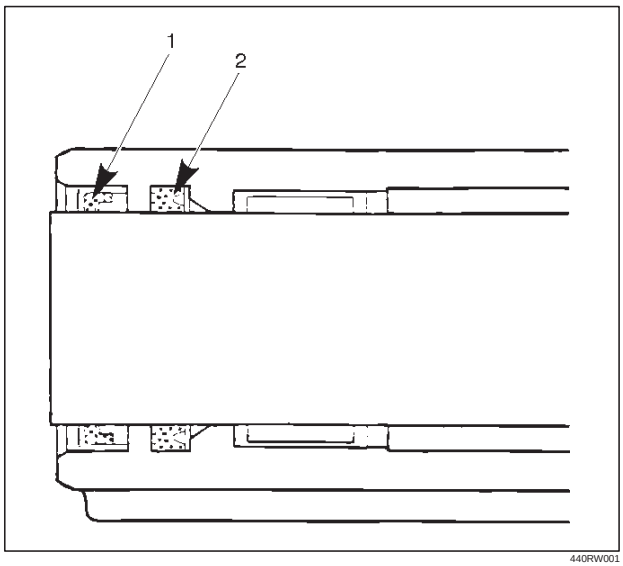

440RW001

- Note the dust seal (1) and the seal ring(2) installation direction. Always install a new part.
- Apply a thin coat of power steering fluid to lip of each part.

Gasket Setting

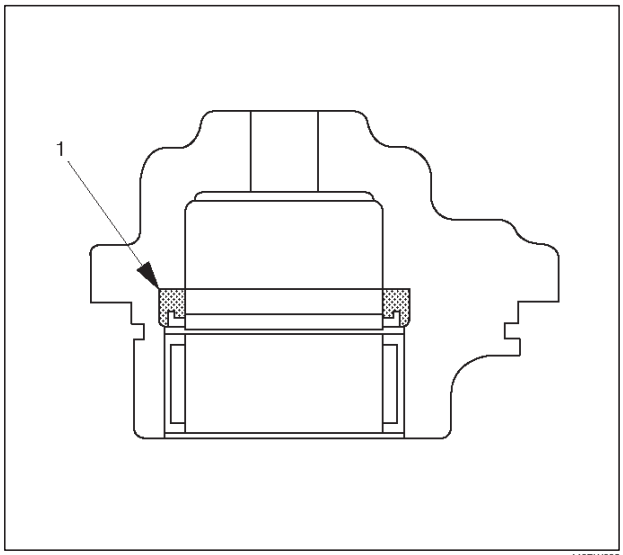

440RW002

- Note the gasket(1) installation direction.
- Apply a thin coat of power steering fluid to lip of each part.

Reassembly

1. Install gear box.
2. Apply a thin coat of power steering fluid to the new O-ring(2) and be sure to discard used part, then install o-ring.
3. Apply a thin coat of power steering fluid to the new seal ring(1) and be sure to discard used part, then install seal ring.
4. Apply a thin coat of power steering fluid to the new O-ring and be sure to discard used part, then install o-ring.

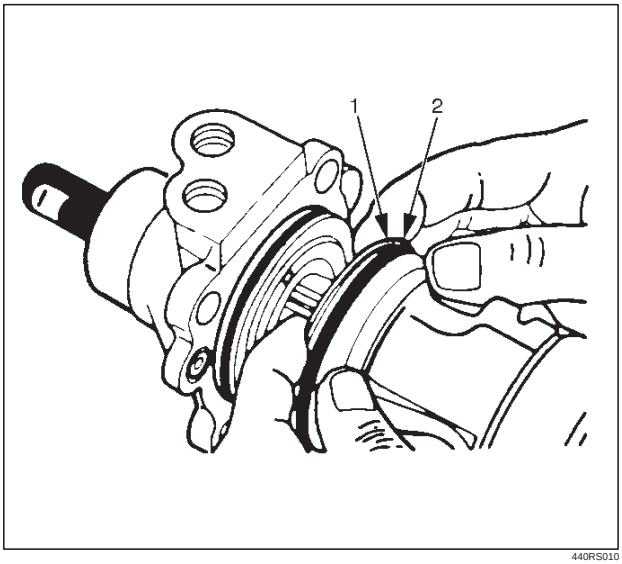

440RS010

5. Install ball-nut and valve housing assembly.
   - Always keep the ball screw and valve housing assembly in a horizontal position (avoid holding it vertically), or the rack piston will fall off onto the end of the worm, causing the rack piston to slip out of the worm shaft and ball to fall out.

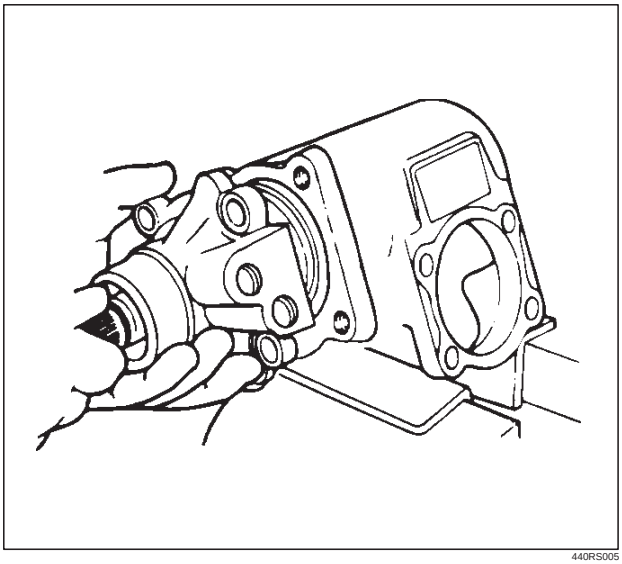

440RS005

- Be careful not to drop the O-ring into the valve housing.
- Tighten the valve housing bolts to the specified torque.

Torque: 47 N·m (35 lb ft)

Downloaded from www.Manualslib.com manuals search engine

6. Install sector shaft.
   - Tape the sector shaft serrations to protect the seal ring from damage.
   - Align the center tooth of ball nut with that of the sector shaft.

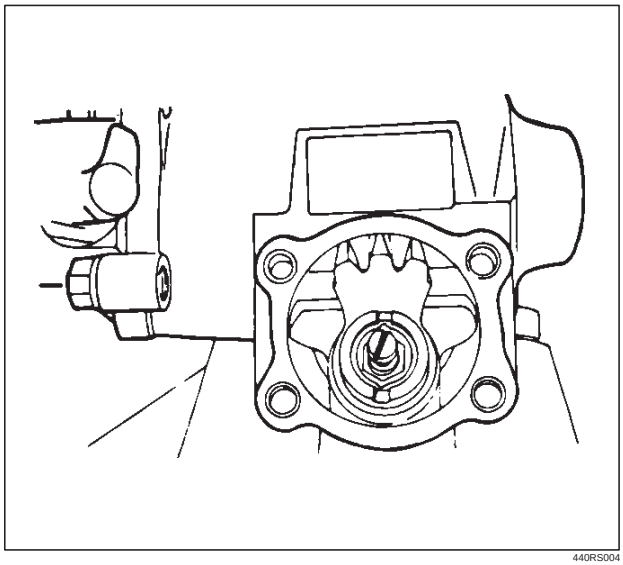

440RS004

7. Install O-ring.
8. Install top cover assembly and tighten the fixing bolts to specified torque.

   Torque: 47 N·m (35 lb ft)

9. Adjust the backlash between the worm gear and the ball nut.

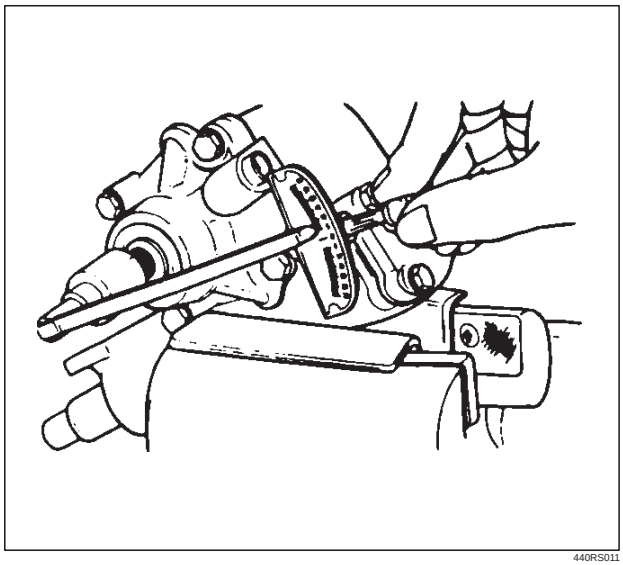

440RS011

   - With the worm gear rotating, set it to the straight ahead position.
   - Set the worm shaft preload to below 10kg·cm with the sector shaft adjusting screw.
   - Measure the worm shaft preload with the worm gear turned 450° both to the right and to the left. The worm gear preload in these positions should be 0.4–0.6 N·m (4–6 kg·cm) lower than in the straight ahead position.
   - Lock the sector shaft adjusting screw with the lock nut.

   Lock nut torque: 41 N·m (30 lb ft)

10. Apply a thin coat of power steering fluid to oil seal lip of each part, then use installer J–26508 to install oil seal.

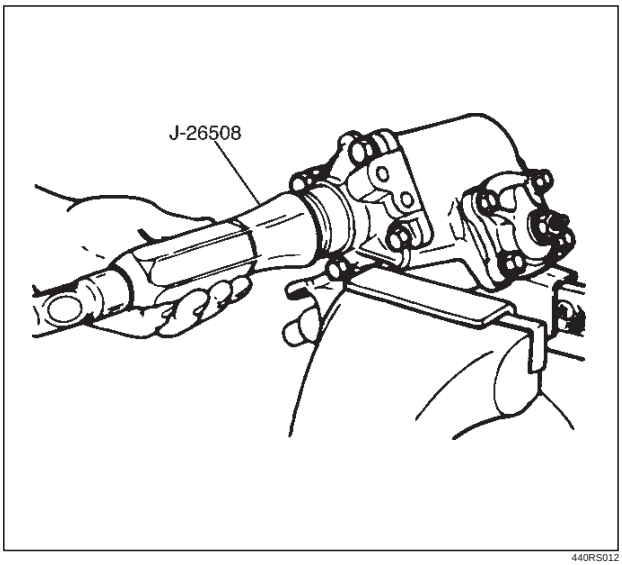

440RS012

11. Install back up ring and position the chamfered face (outer circumference) towards the oil seal.
12. Install retaining ring and position the chamfered face (outer circumference) towards the oil seal.
13. Install dust cover.

Downloaded from www.Manualslib.com manuals search engine

Main Data and Specifications

General Specifications

Steering unit	Type	Integral, ball screw
	Gear ratio	16.3 : 1

Torque Specifications

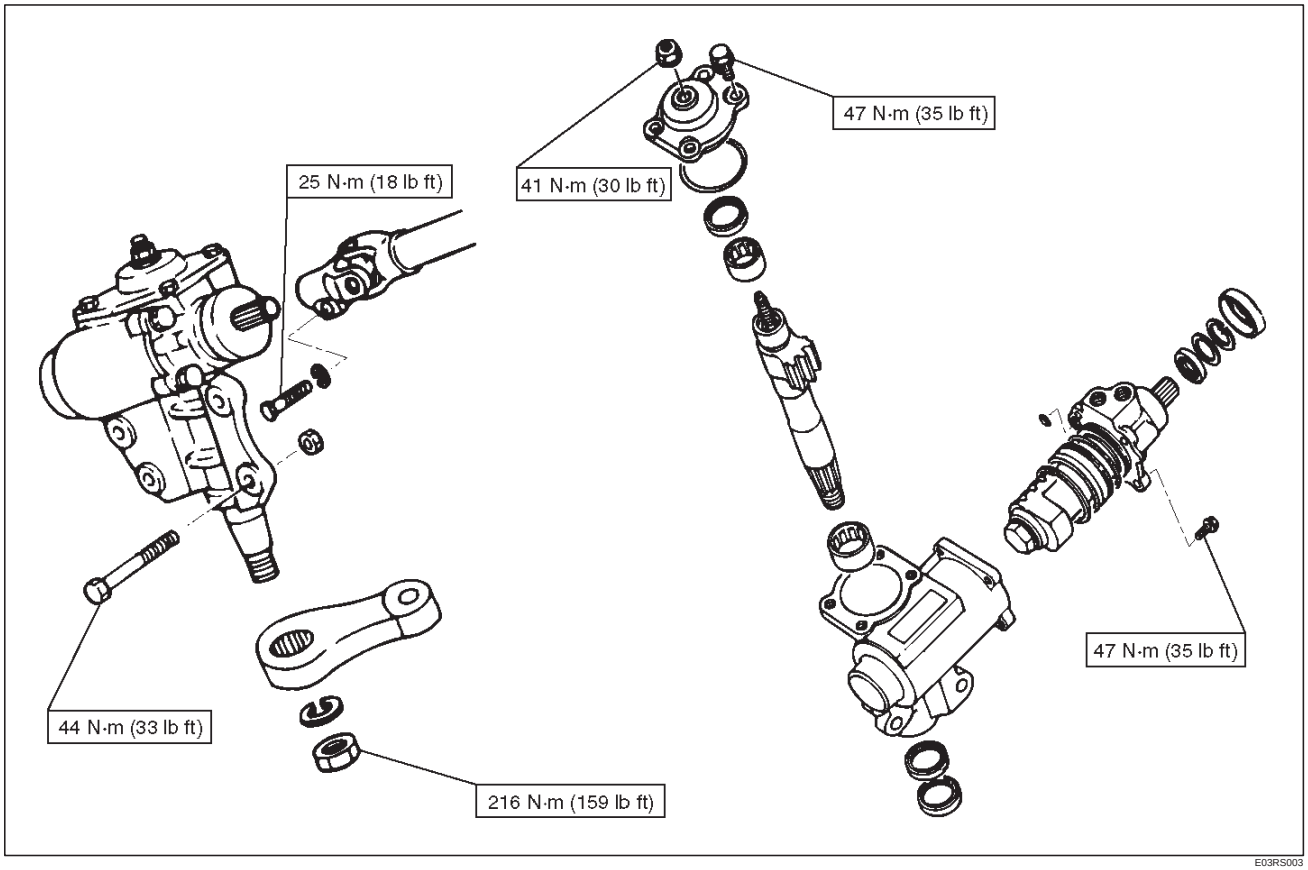

E03RS003

Downloaded from www.Manualslib.com manuals search engine

Power Steering Pump

Power Steering Pump and Associated Parts

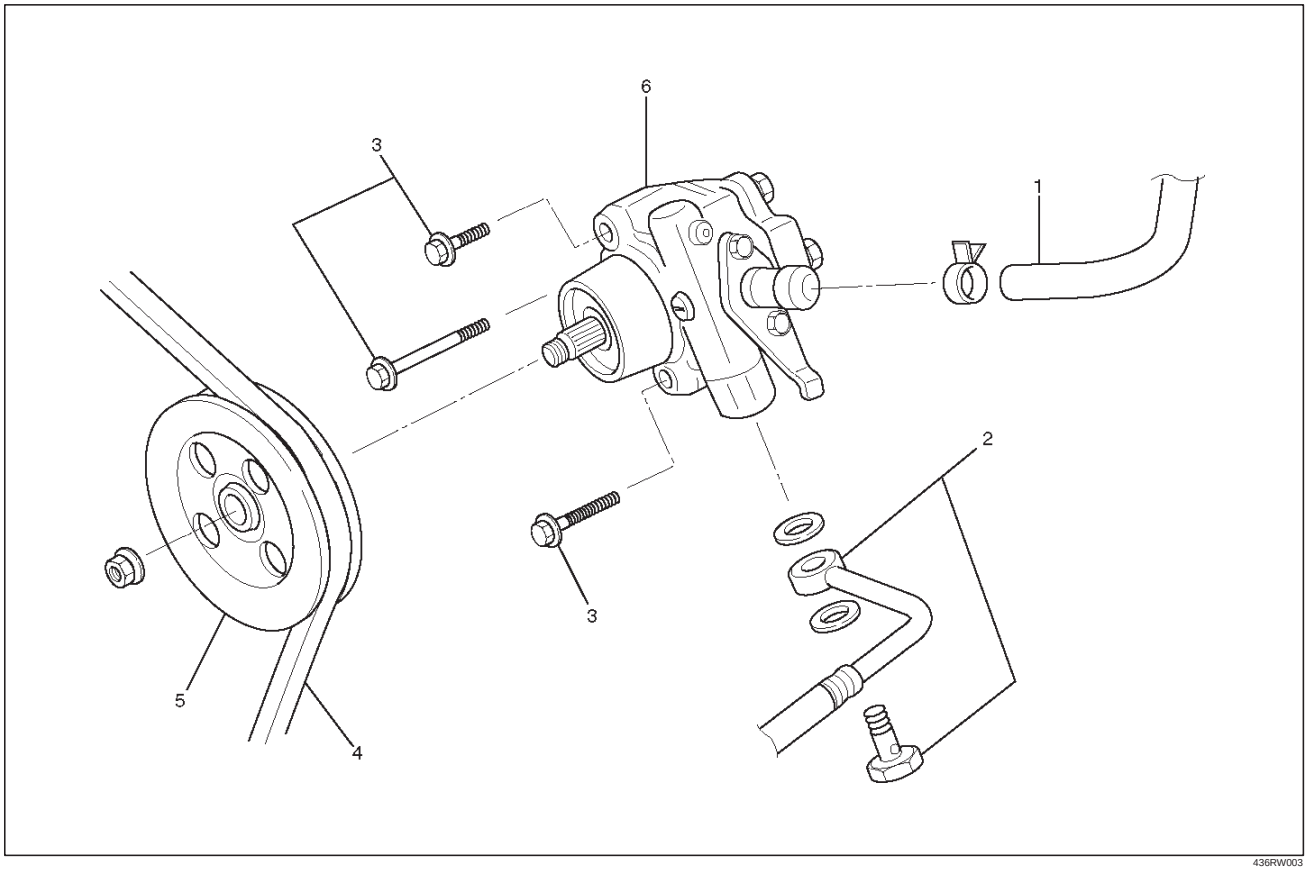

436RW003

Legend

(1) Hose, Suction
(2) Hose, Flexible
(3) Bolt
(4) Belt
(5) Pulley
(6) Pump Assembly

Removal

1. Drain the engine coolant.
2. Place a drain pan below the pump.
3. Remove the air cleaner duct (1) and the radiator upper hose (2).

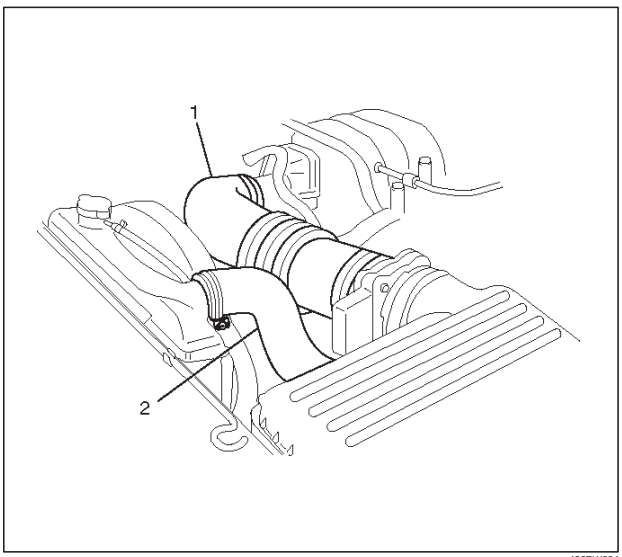

436RW004

Downloaded from www.Manualslib.com manuals search engine

4. Remove the drive belt.
5. Remove the pulley from the power steering pump.
6. Disconnect the suction hose.
7. Disconnect the flexible hose.
8. Remove the power steering pump fixing bolt.
9. Remove the pump assembly.

CAUTION: When removing the prmp assembly, be careful not to damage the wiring harnessunder the pump housing.

Installation

1. Install the adjust plate and tighten the mounting bolts to the specified torque.

   Torque: 56 N·m (41 lb ft)

2. Install the pump assembly. Connect the harness under the pump housing.
3. Tighten the fixing bolt to the specified torque.

   Torque: 46 N·m (34 lb ft)

4. Connect the flexible hose, then tighten the eye bolt to specified torque.

   Torque: 54 N·m (40 lb ft)

5. Connect the suction hose.
6. Install the pulley onto the power steering pump and tighten the nut to the specified torque.

   Torque: 78 N·m (58 lb ft)

7. Install the air cleaner duct and the radiator upper hose.
8. Refill the engine coolant.
9. Fill and bleed the power steering system. Refer to Bleeding the Power Steering System in this section.

Downloaded from www.Manualslib.com manuals search engine

Power Steering Pump Disassembled View

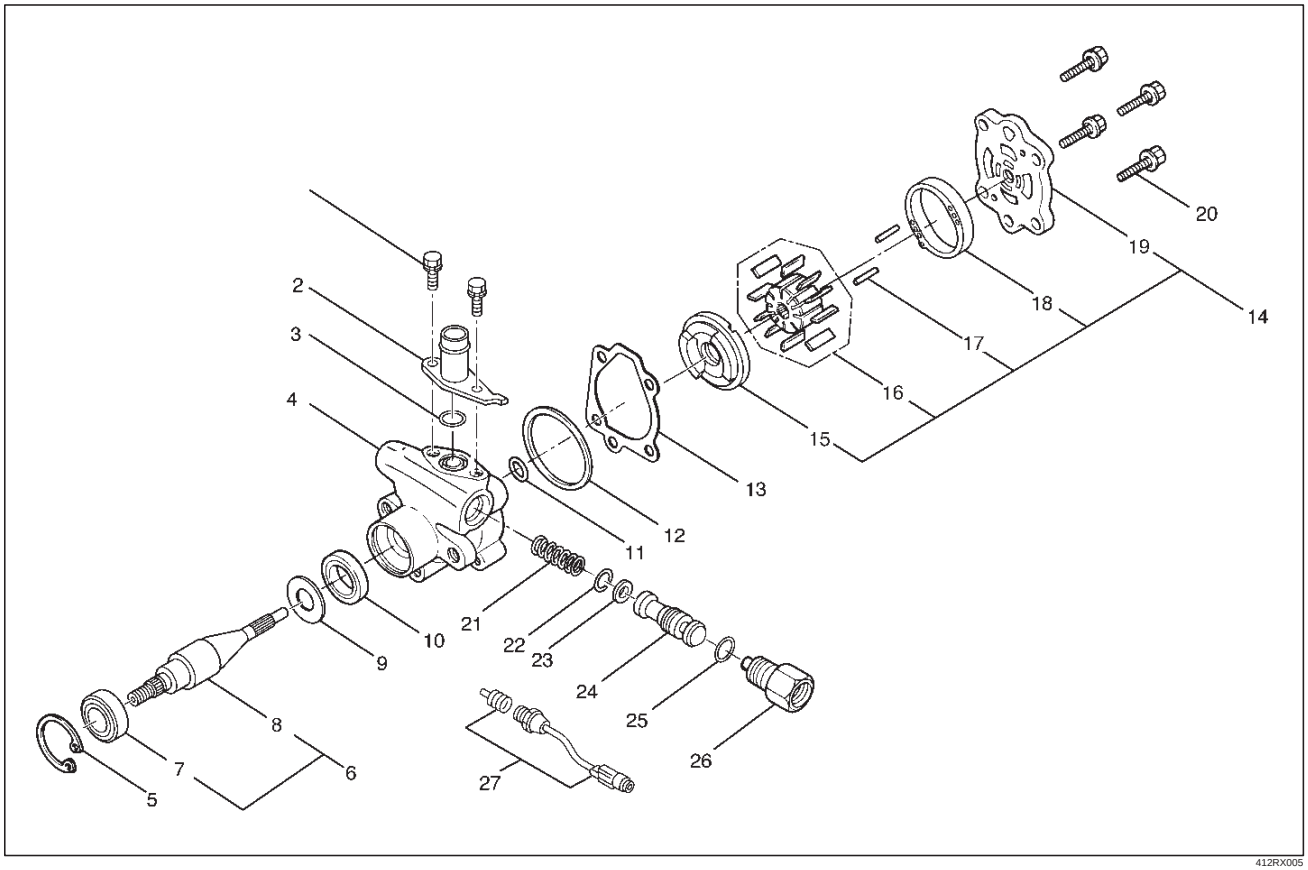

412RX005

Legend

(1) Bolt
(2) Suction Pipe
(3) O-ring
(4) Front Housing
(5) Snap Ring
(6) Shaft Assembly
(7) Bearing
(8) Shaft
(9) Retaining Ring
(10) Oil Seal
(11) O-ring
(12) O-ring
(13) Gasket
(14) Rear Housing Assembly and Pump Cartridge
(15) Side Plate
(16) Rotor and Vane
(17) Pin
(18) Cam
(19) Rear Housing
(20) Bolt
(21) Spring
(22) Retaining Ring
(23) Filter
(24) Valve
(25) O-ring
(26) Connector
(27) Pressure Switch

Disassembly

1. Clean the oil pump with solvent (plug the discharge and suction ports to prevent the entry of solvent). Be careful not to expose the oil seal of shaft assembly to solvent.
2. Remove the bolt.
3. Remove the suction pipe.
4. Remove the O-ring.
5. Remove the connector.
6. Remove the O-ring.
7. Remove the valve.
8. Remove the retaining ring.
9. Remove the filter.
10. Remove the spring.
11. Remove the snap ring.
12. Remove the shaft assembly.
13. Remove the retaining ring.
14. Remove the oil seal.

CAUTION: When removing the oil seal, be careful not to damage the housing.

Downloaded from www.Manualslib.com manuals search engine

15. Remove the bolt.
16. Remove the rear housing assembly and the pump cartridge.
17. Remove the gasket.
18. Remove the O-ring.
19. Remove the O-ring.
20. Remove the front housing.
21. Remove the side plate.
22. Remove the rotor and vane.
23. Remove the cam.
24. Remove the pin.
25. Remove the rear housing.
26. Remove the pressure switch.

Inspection and Repair

Make all necessary adjustments, repairs, and part replacements if wear, damage, or other problems are discovered during inspection.

Rotor

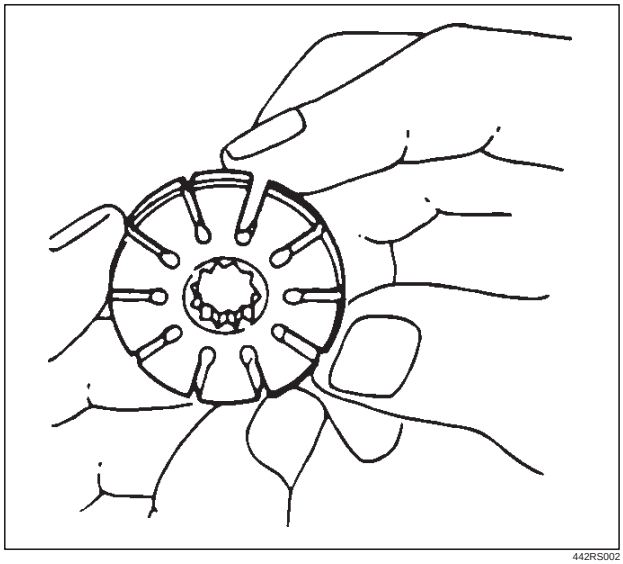

442RS002

Check that the groove in the vane is free from excessive wear and that the vane slides smoothly. When part replacement becomes necessary, the pump cartridge should be replaced as a subassembly.

Vane

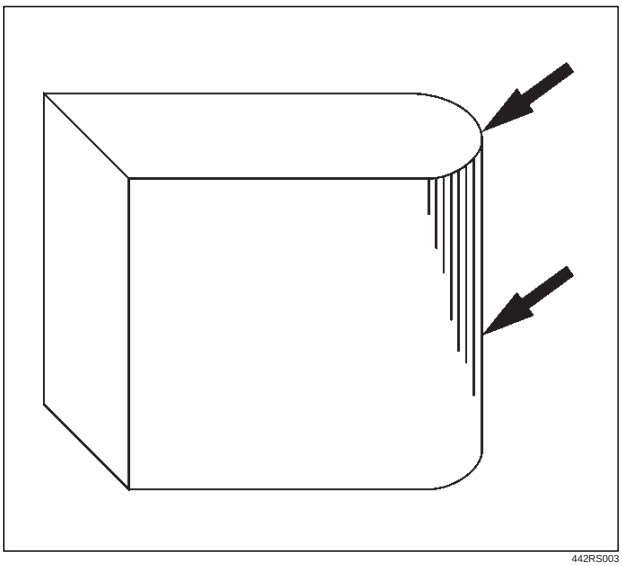

442RS003

Sliding faces of the vane should be free from wear. (Particularly the curved face at the tip that contact with the cam should be free from wear and distortion). When part replacement becomes necessary, the pump cartridge should be replaced as a subassembly.

Cam

The inner face of the arm should have a uniform contact pattern without a sign of step wear. When part replacement becomes necessary, the pump cartridge should be replaced as a subassembly.

Side Plate

The sliding faces of parts must be free from step wear (more than 0.01 mm), which can be felt by the finger nail. The parts with minor scores may be reused after lapping the face.

Valve

The sliding face of the valve must be free from burrs and damage. The parts with minor scores may be reused after smoothing with emery cloth (#800 or finer).

Shaft

Oil seal sliding faces must be free from a step wear which can be felt by the finger nail. Needle bearing fitting face must be free from damage and wear.

O-ring, Oil Seal, Retaining Ring

Be sure to discard used parts, and always use new parts for installation. Prior to installation, lubricate all seals and rings with power steering fluid.

Pressure Switch

Check the switch operation as follows:
With engine idling and A/C on, turn the steering wheel fully to the left; compressor should interrupt and engine idle speed will increase. Shut off A/C and again turn

Downloaded from www.Manualslib.com manuals search engine

steering fully to the left; engine idle will increase. If system fails to function properly, disconnect connector at the pressure switch and repeat system check while testing continuity across disconnected SW connector.

Reassembly

1. Install rear housing.
2. Install pin.
3. Install cam.
4. Install the rotor with punch mark facing the front housing.

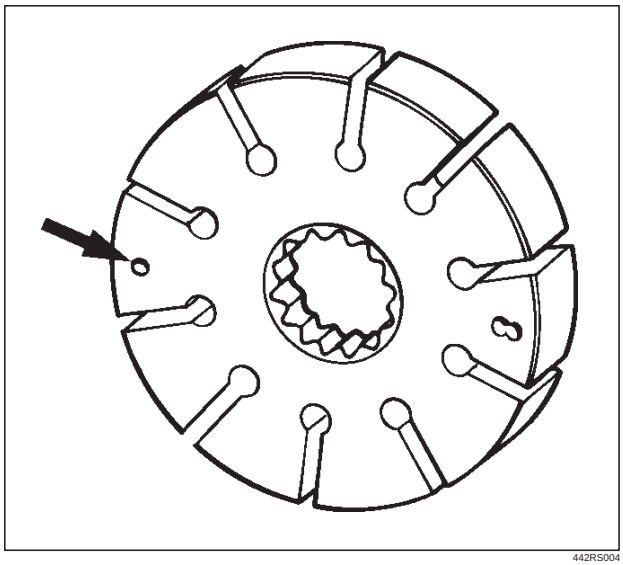

442RS004

5. Install the vanes with curved face in contact with the inner wall of the cam.

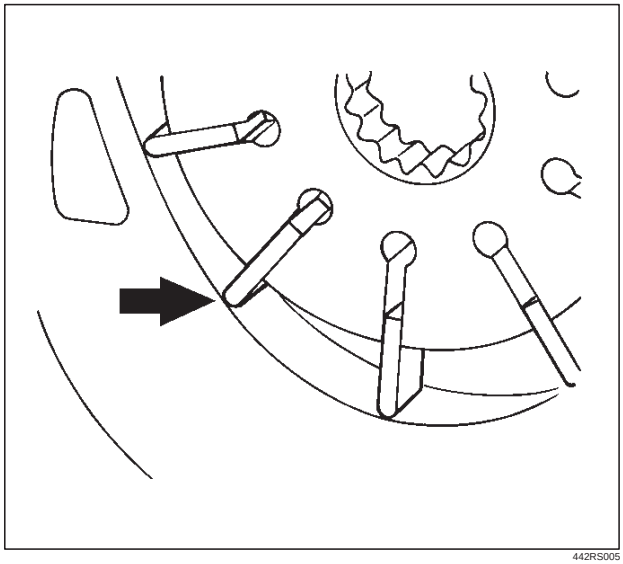

442RS005

6. Install side plate.

CAUTION: When installing side plate, be careful not to damage its inner surface. Damaged side plate may cause poor pump performance, pump seizure or oil leakage.

7. Install front housing.
8. Install a new o-ring and be sure to discard used parts.
9. Install a new o-ring and be sure to discard used parts.
10. Install a new gasket and be sure to discard used parts.
11. Install rear housing and pump cartridge.
12. Install bolt and tighten it to the specified torque.

    Torque: 17.6 N·m (12.8 lb ft)

13. Install a new oil seal and be sure to discard used parts.

CAUTION: When installing the oil seal, be careful not to damage the oil seal contacting surface of the housing.

14. Install shaft assembly.
15. Install snap ring.
16. Install spring.
17. Install retaining ring.
18. Install filter.
19. Install valve.
20. Install retaining ring.
21. Install a new o-ring and be sure to discard used parts.
22. Install connector and tighten it to the specified torque.

    Torque: 19.6 N·m (14.3 lb ft)

23. Install a new o-ring and be sure to discard used parts.
24. Install suction pipe.
25. Install bolt and tighten it to the specified torque.

    Torque: 15.7 N·m (11.5 lb ft)

26. Install pressure switch and tighten it to the specified torque.

    Torque: 20 N·m (14 lb ft)

Downloaded from www.Manualslib.com manuals search engine

Main Data and Specifications

General Specifications

Oil pump	Type	Vane
	Operating fluid	ATF DEXRON®–III

Torque Specifications

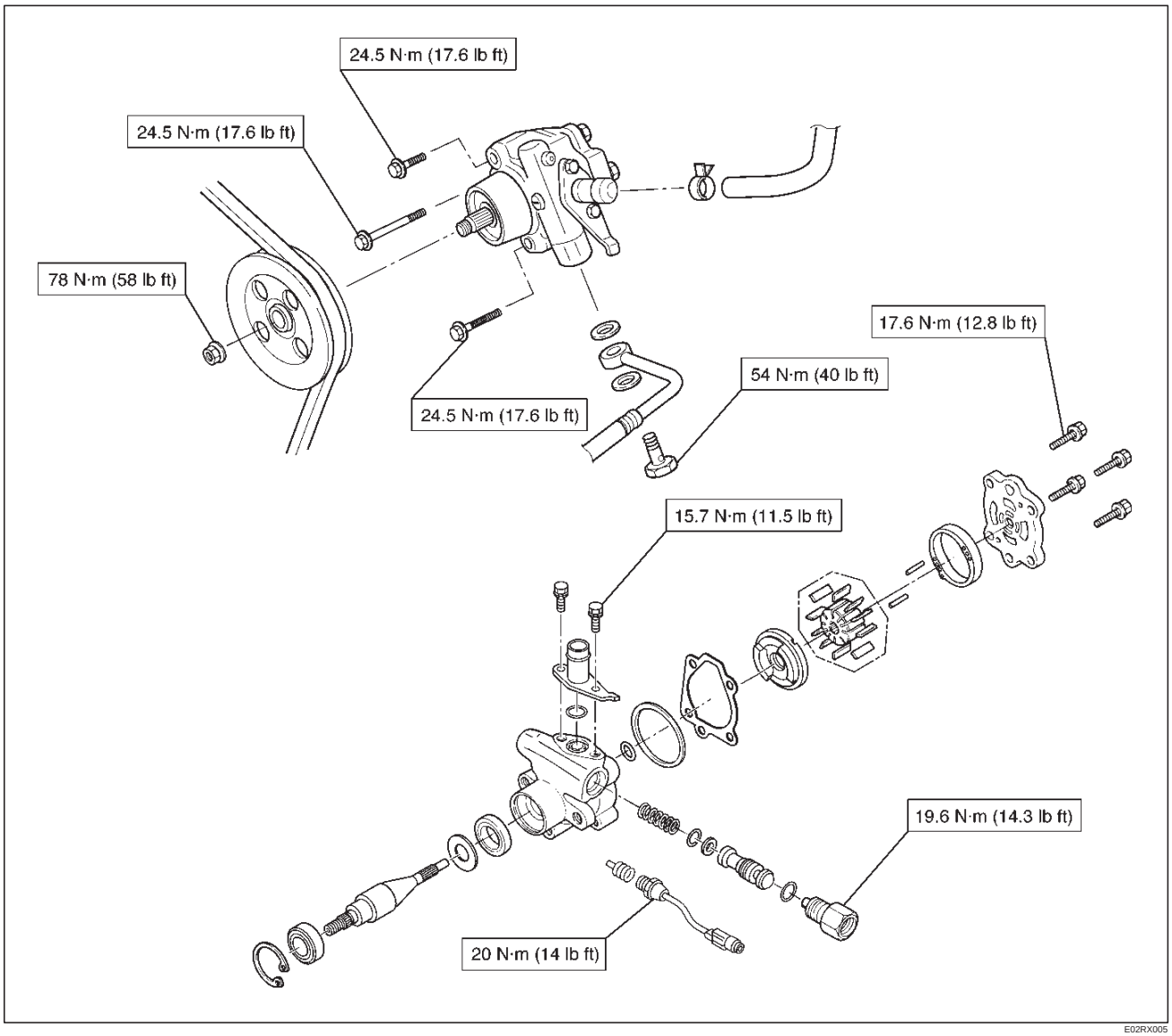

E02RX005

Downloaded from www.Manualslib.com manuals search engine

Center Track Rod Assembly

Center Track Rod Assembly and Associated Parts

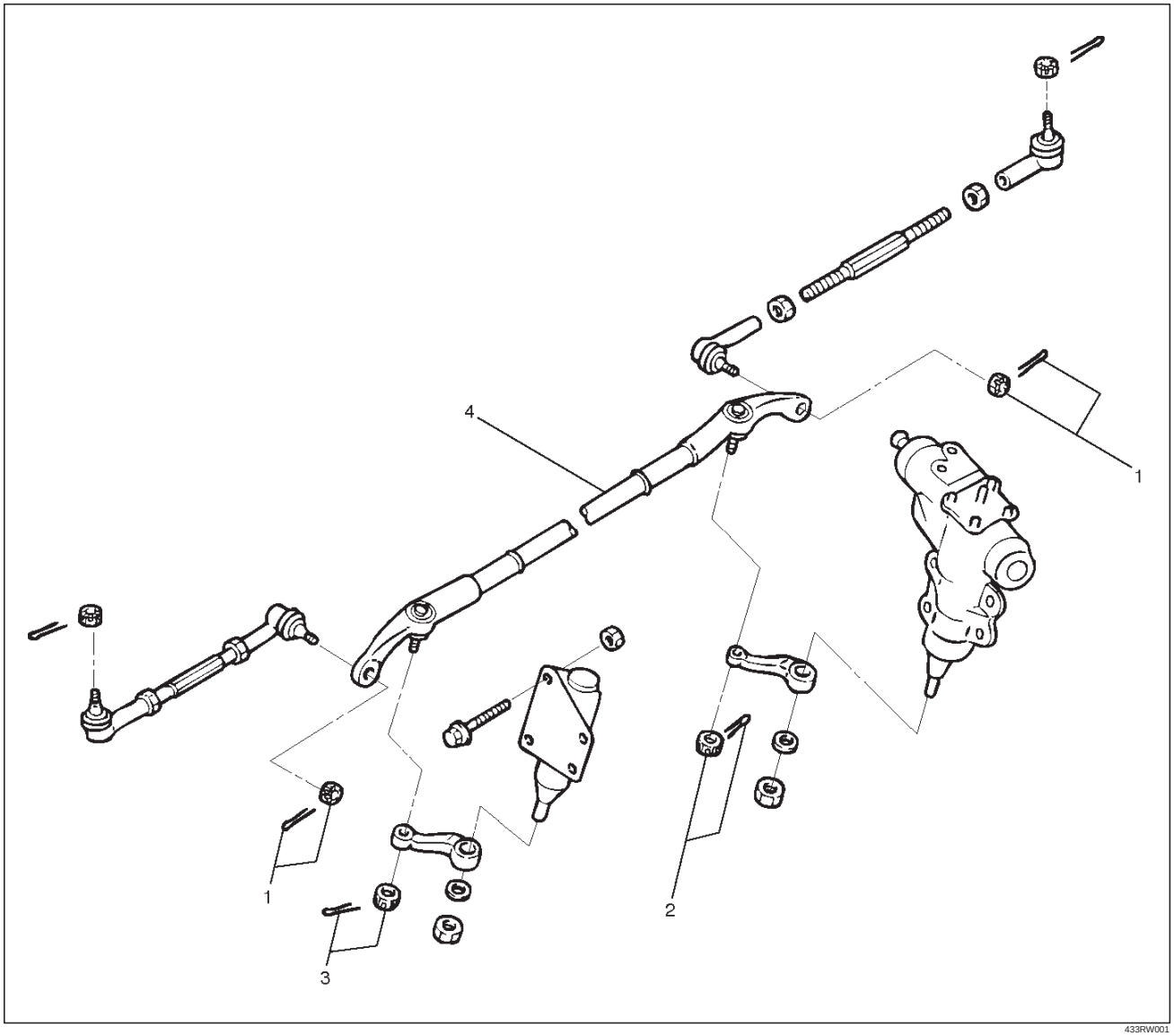

433RW001

Legend

(1) Nut and Cotter Pin
(2) Nut and Cotter Pin, Pitman Arm
(3) Nut and Cotter Pin, Relay Lever
(4) Center Track Rod Assembly

Downloaded from www.Manualslib.com manuals search engine

Removal

1. Raise the vehicle and support the frame with suitable safety stands.
2. Remove nut and cotter pin, then use remover J–36831 to disconnect outer track rod assembly from the center track rod.

CAUTION: Be careful not to damage the ball joint boot.

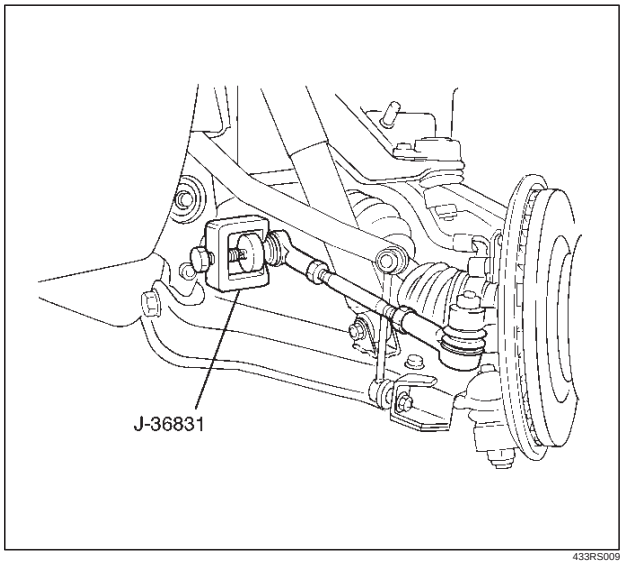

433RS009

3. Remove nut and cotter pin then use remover J–36831 to remove pitman arm from the center track rod.

CAUTION: Be careful not to damage the ball joint boot.

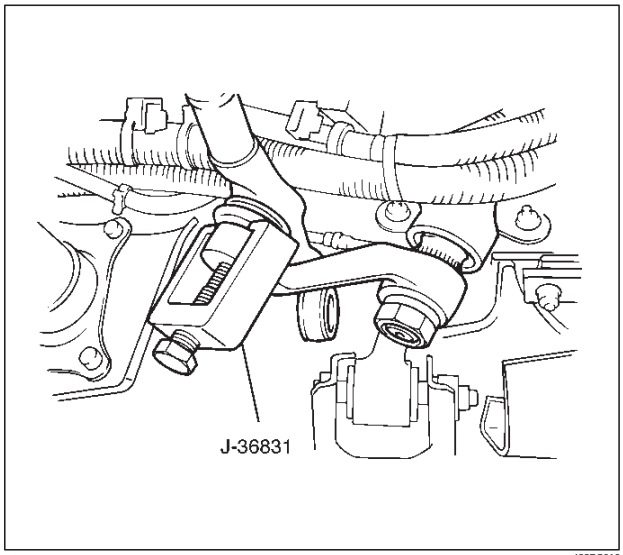

433RS010

4. Remove nut and cotter pin then use remover J–36831 to remove relay lever from the center track rod.

CAUTION: Be careful not to damage the ball joint boot.

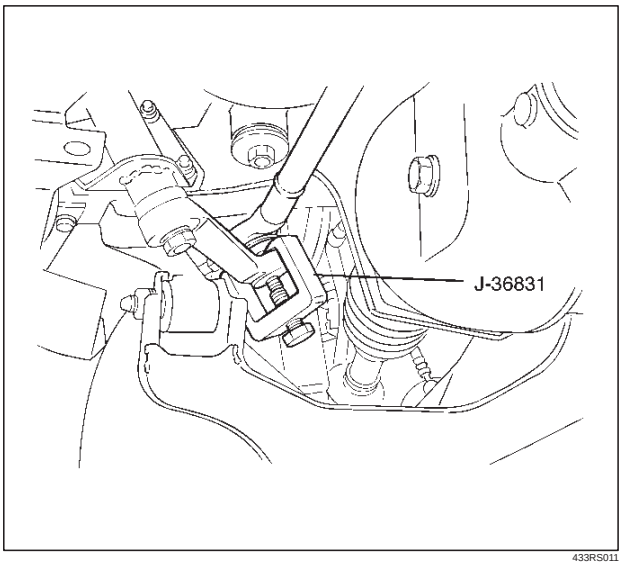

433RS011

5. Remove center track rod assembly.

Inspection and Repair

Make necessary correction or parts replacement if wear, damage, corrosion, bending, deteriorations or any other abnormal condition are found through inspection.
Check the ball joint (Boot, screws and tapered surfaces).

Installation

1. Install center track rod assembly.
2. Install nut, cotter pin and relay lever, then tighten the nut to the specified torque, with just enough additional torque to align cotter pin holes. Install new cotter pin.

   Torque: 59 N·m (43 lb ft)
3. Install nut, cotter pins and pitman arm, then tighten the nut to the specified torque, with just enough additional torque to align cotter pin holes. Install new cotter pin.

   Torque: 98 N·m (72 lb ft)
4. Install nut and cotter pins, then tighten the nut to the specified torgue, with fust enough additional torgue to align cotter pen holes. Install new cotter pin.

   Torque: 98 N·m (72 lb ft)

Downloaded from www.Manualslib.com manuals search engine

Outer Track Rod Assembly

Outer Track Rod Assembly and Associated Parts

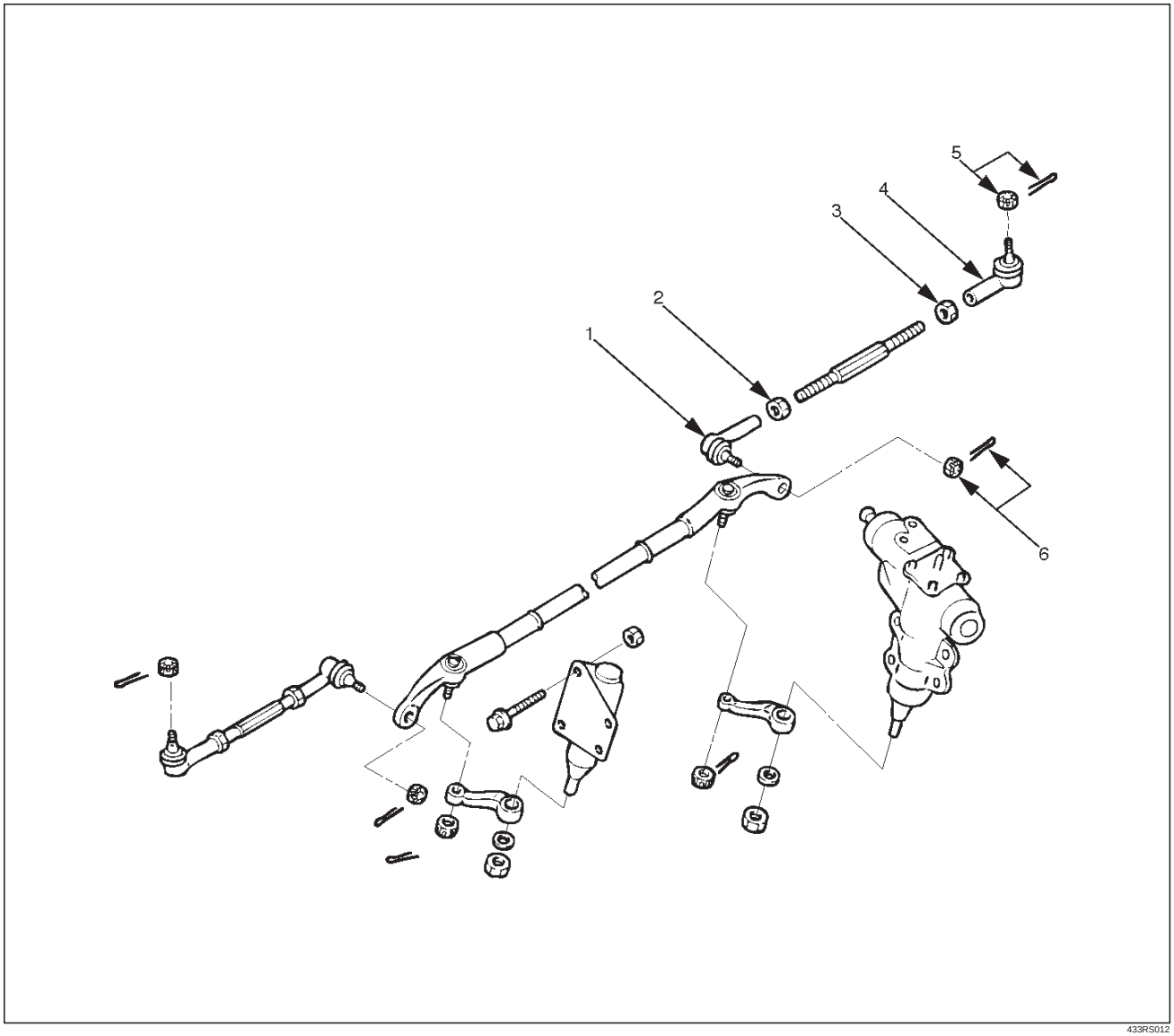

433RS012

Legend

(1) Rod End Assembly, Inner
(2) Lock Nut, Inner (Left-hand threads)
(3) Lock Nut, Outer
(4) Rod End Assembly, Outer
(5) Nut and Cotter Pin, Knuckle Arm
(6) Nut and Cotter Pin, Center Track Rod

Downloaded from www.Manualslib.com manuals search engine

Removal

1. Remove wheel and tire assembly. Refer to Wheel Replacement in Suspension section.
2. Remove nut and cotter pin, then use remover J–36831 to disconnect outer track rod assembly at the center track rod.

CAUTION: Be careful not to damage the ball joint boot.

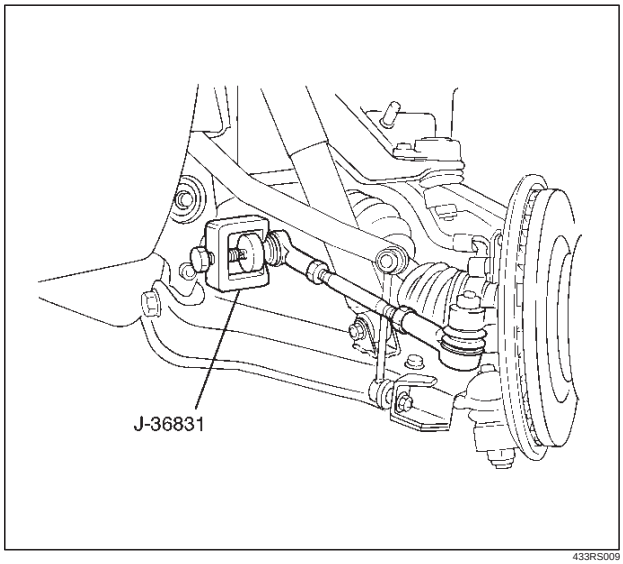

433RS009

3. Remove nut and cotter pin then use remover J–36831 to remove outer track rod assembly from the knuckle arm.

CAUTION: Be careful not to damage the ball joint boot.

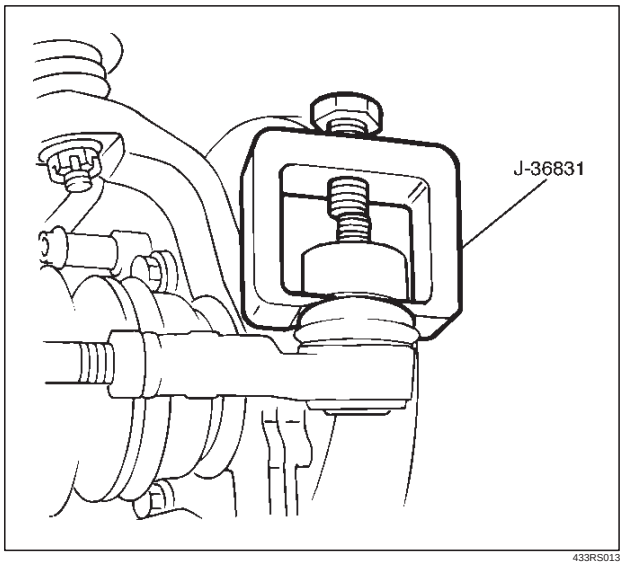

433RS013

4. Remove outer lock nut.
5. Apply setting marks (1) to ensure reassembly of the parts in their original position, then remove outer rod end assembly.

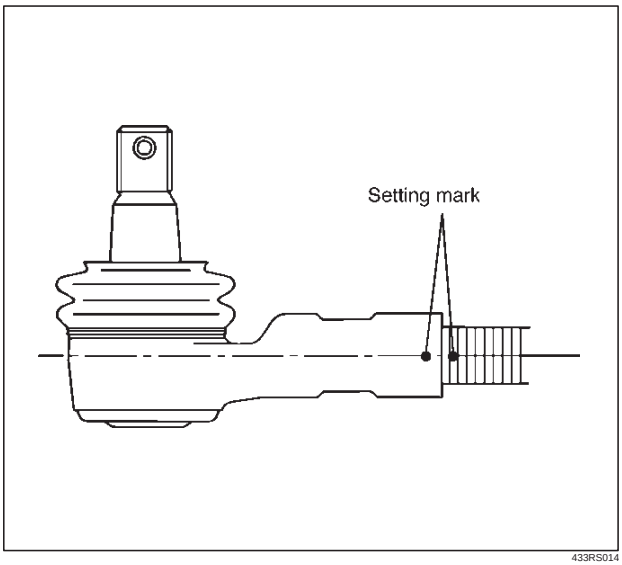

433RS014

6. Remove inner lock nut.

NOTE: For either outer rod, the screw on the right side of the vehicle is threaded counterclockwise.

7. Apply setting marks (1) to ensure reassembly of the parts in their original position, then remove inner rod end.

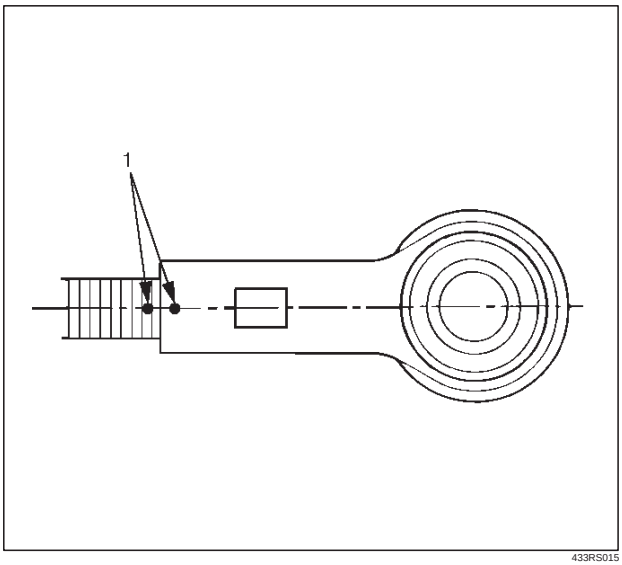

433RS015

Inspection and Repair

Make necessary correction or parts replacement if wear, damage, corrosion, bending, deteriorations or any other abnormal condition are found through inspection.
Check the following parts:

- Rod end assembly
- Ball joint (Boot, screws and tapered surfaces)

Downloaded from www.Manualslib.com manuals search engine

Installation

1. Install inner rod end and align the setting marks applied during disassembly.
2. Tighten the inner lock nut to specified torque.

   Torque: 118 N·m (87 lb ft)

NOTE: For either outer rod, the screw on the right side of the vehicle is threaded counterclockwise.

3. Install outer rod end assembly and align the setting marks applied during disassembly.
4. Tighten the outer lock nut to specified torque.

   Torque: 118 N·m (87 lb ft)

5. Install knuckle arm nut and cotter pin then tighten the nut to the specified torque, with just enough additional torque to align cotter pin holes. Install new cotter pin.

   Torque: 98 N·m (72 lb ft)

6. Install center track rod and nut and cotter pin then tighten the nut to the specified torque, with just enough additional torque to align cotter pin holes. Install new cotter pin.

   Torque: 98 N·m (72 lb ft)

NOTE: If replacing the track rod, adjust the new track rod length.

Rod length: 328.3 mm (12.93 in)

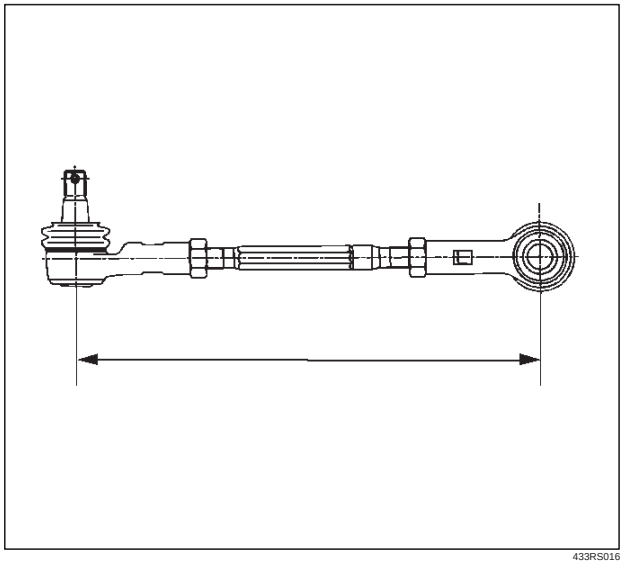

433RS016

NOTE: Adjust the toe-in. Refer to Front End Alignment Inspection and Adjustment in this section.

Downloaded from www.Manualslib.com manuals search engine

Relay Lever

Relay Lever and Associated Parts

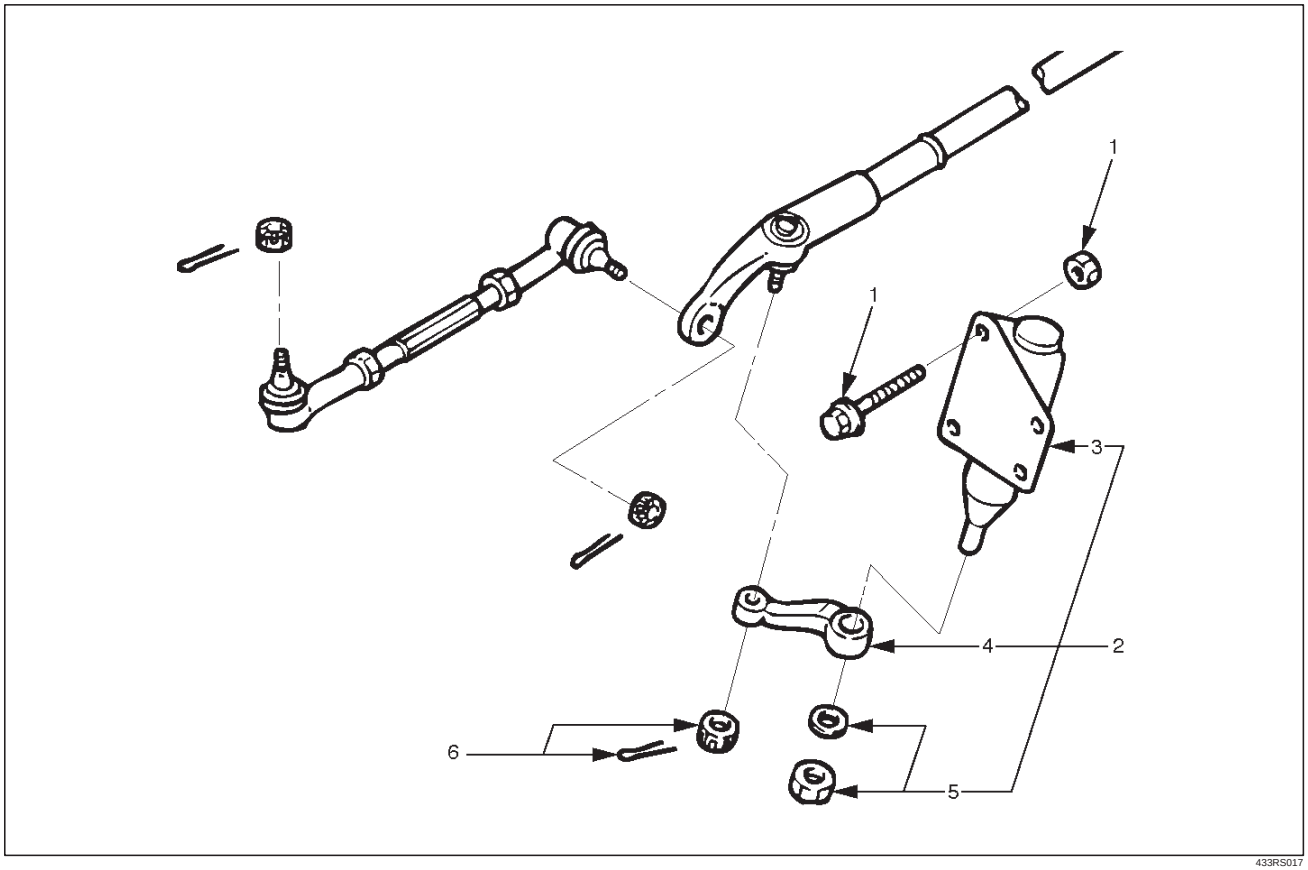

433RS017

Legend

(1) Bolt and Nut
(2) Relay Lever and Bracket
(3) Bracket
(4) Relay Lever
(5) Nut and Washer
(6) Nut and Cotter Pin

Removal

1. Raise the vehicle and support the frame with suitable safety stands.
2. Remove nut and cotter pin then use remover J–36831 to disconnect relay lever at the center track rod.

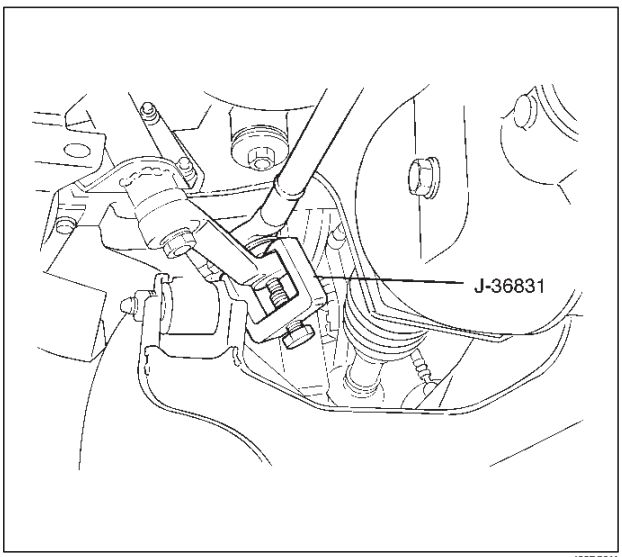

433RS011

Downloaded from www.Manualslib.com manuals search engine

3. Remove stabilizer bar bolt and nut and push the stabilizer bar aside, then remove the relay lever bolts and nuts.

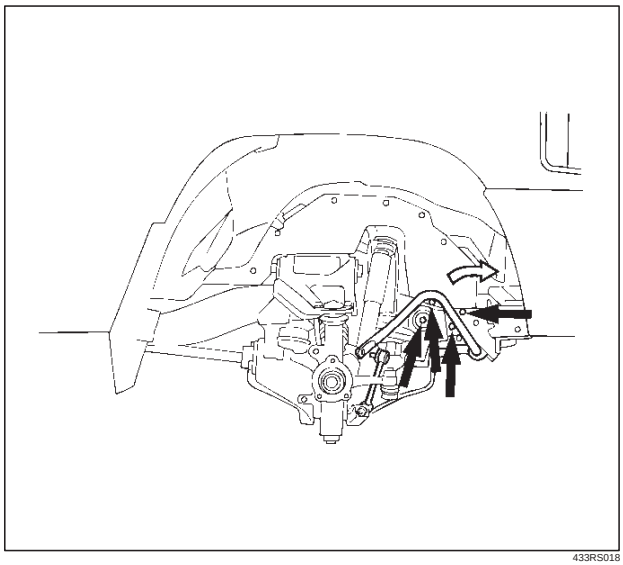

433RS018

4. Remove relay lever and bracket.
5. Remove relay lever nut and washer.
6. Remove relay lever, use remover J–22912–01 to remove relay lever from the bracket.

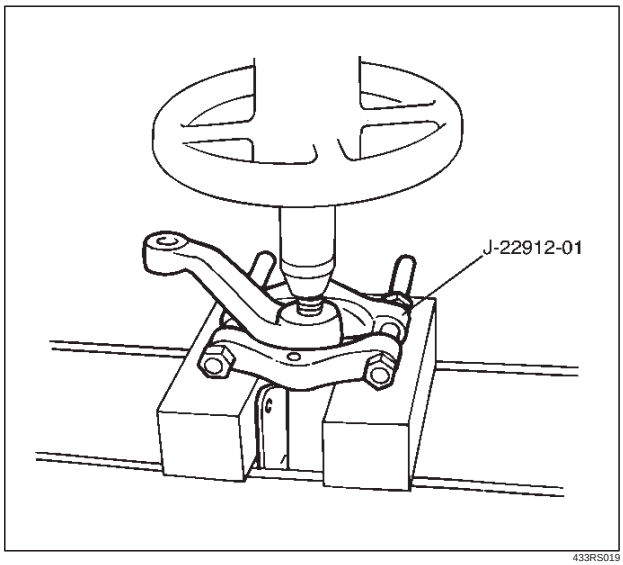

433RS019

7. Remove bracket.

Installation

1. Install bracket.
2. Install relay lever.
3. Install nut and washer and tighten the nut to the specified torque.

   Torque: 118 N·m (87 lb ft)

4. Install relay lever and bracket.
5. Install bolt and nut and tighten it to the specified torque.

   Torque: 44 N·m (33 lb ft)

6. Install nut and cotter pin and tighten the nut to the specified torque, with just enough additional torque to align cotter pin holes. Install new cotter pin.

   Torque: 59 N·m (43 lb ft)

Downloaded from www.Manualslib.com manuals search engine

Steering Linkage and Associated Parts

Main Data and Specifications

Torque Specifications

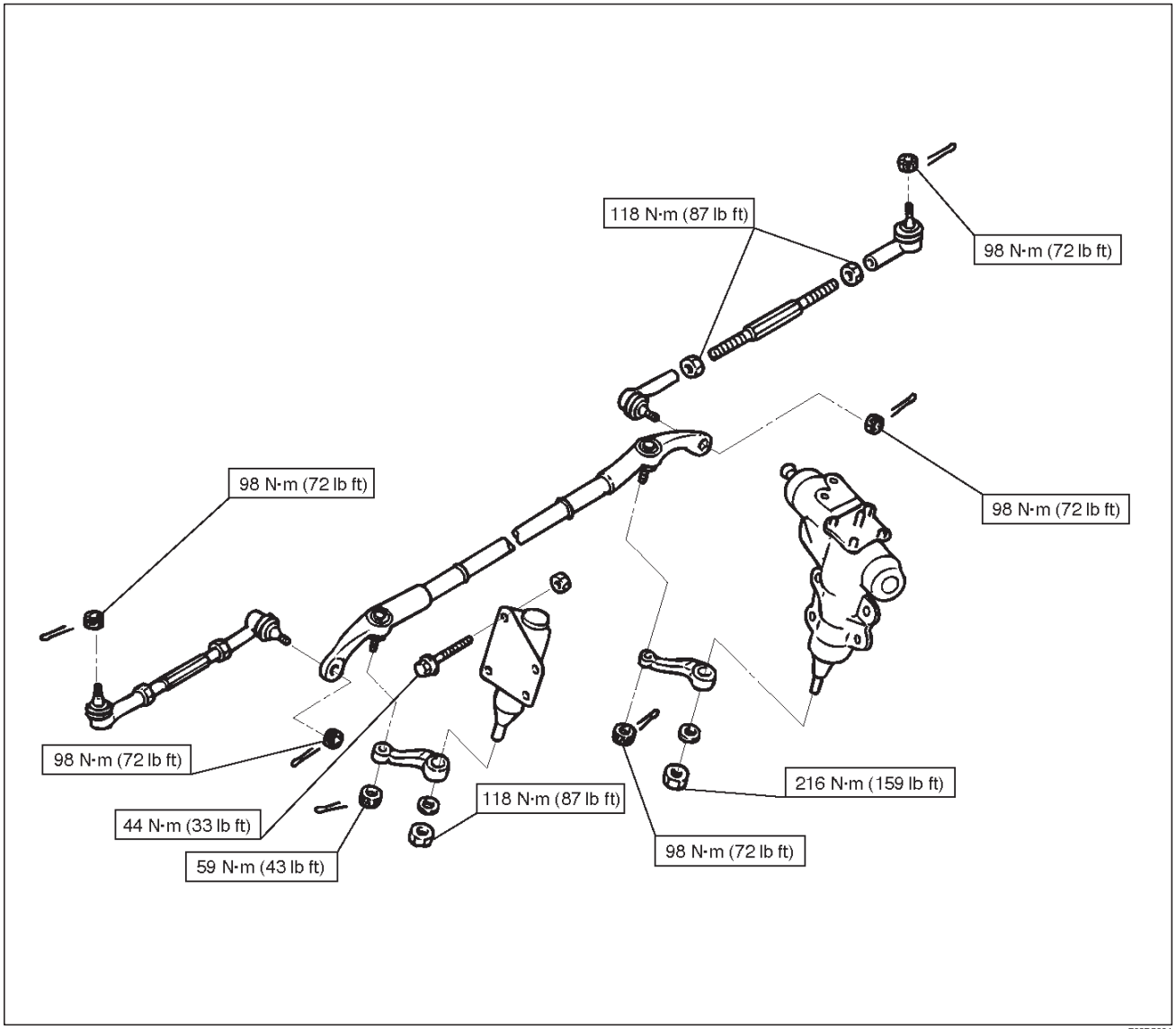

E03RS004

Downloaded from www.Manualslib.com manuals search engine

Special Tools

ILLUSTRATION	**TOOL NO.** TOOL NAME
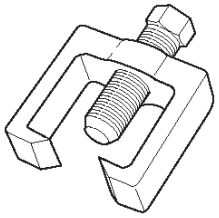 901RS281	**J–36831** Tie rod end remover
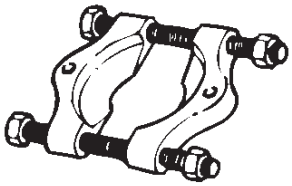 901RS282	**J–22912–01** Relay lever remover

Downloaded from www.Manualslib.com manuals search engine

Supplemental Restraint System Steering Wheel & Column

Service Precaution

This steering wheel and column repair section covers the Supplemental Restraint System (SRS) steering column. The following repair procedures are specific to SRS components. When servicing a vehicle equipped with Supplemental Restraint System, pay close attention to all WARNINGS and CAUTIONS.
For detailed explanation about SRS, refer to Restraints section.

WARNING: THIS VEHICLE HAS A SUPPLEMENTAL RESTRAINT SYSTEM (SRS). REFER TO THE SRS COMPONENT AND WIRING LOCATION VIEW IN ORDER TO DETERMINE WHETHER YOU ARE PERFORMING SERVICE ON OR NEAR THE SRS COMPONENTS OR THE SRS WIRING. WHEN YOU ARE PERFORMING SERVICE ON OR NEAR THE SRS COMPONENTS OR THE SRS WIRING, REFER TO THE SRS SERVICE INFORMATION. FAILURE TO FOLLOW WARNINGS COULD RESULT IN POSSIBLE AIR BAG DEPLOYMENT, PERSONAL INJURY, OR OTHERWISE UNNEEDED SRS SYSTEM REPAIRS.

SAFE HANDLING OF INFLATOR MODULES REQUIRES FOLLOWING THE PROCEDURES DESCRIBED BELOW FOR BOTH LIVE AND DEPLOYED MODULES.

SAFETY PRECAUTIONS MUST BE FOLLOWED WHEN HANDLING A DEPLOYED AIR BAG ASSEMBLY (AIR BAG). AFTER DEPLOYMENT, THE AIR BAG ASSEMBLY (AIR BAG) SURFACE MAY CONTAIN A SMALL AMOUNT OF SODIUM HYDROXIDE, A BY-PRODUCT OF THE DEPLOYMENT REACTION, THAT IS IRRITATING TO THE SKIN AND EYES. MOST OF THE POWDER ON THE AIR BAG ASSEMBLY (AIR BAG) IS HARMLESS. AS A PRECAUTION, WEAR GLOVES AND SAFETY GLASSES WHEN HANDLING A DEPLOYED AIR BAG ASSEMBLY, AND WASH YOUR HANDS WITH MILD SOAP AND WATER AFTERWARDS.

WHEN CARRYING A LIVE AIR BAG ASSEMBLY, MAKE SURE THE BAG AND TRIM COVER ARE POINTED AWAY FROM YOU. NEVER CARRY AN AIR BAG ASSEMBLY BY THE WIRES OR CONNECTOR ON THE UNDERSIDE OF MODULE. IN THE CASE OF AN ACCIDENTAL DEPLOYMENT, THE BAG WILL THEN DEPLOY WITH MINIMAL CHANCE OF INJURY. WHEN PLACING A LIVE AIR BAG ASSEMBLY ON A BENCH OR OTHER SURFACE, ALWAYS FACE THE BAG AND TRIM COVER UP, AWAY FROM THE SURFACE.

NEVER REST A STEERING COLUMN ASSEMBLY ON THE STEERING WHEEL WITH THE AIR BAG ASSEMBLY FACE DOWN AND COLUMN VERTICAL. THIS IS NECESSARY SO THAT A FREE SPACE IS PROVIDED TO ALLOW THE AIR BAG ASSEMBLY TO EXPAND IN THE UNLIKELY EVENT OF ACCIDENTAL DEPLOYMENT. OTHERWISE, PERSONAL INJURY COULD RESULT.

TO AVOID DEPLOYMENT WHEN TROUBLE SHOOTING THE SRS SYSTEM, DO NOT USE ELECTRICAL TEST EQUIPMENT, SUCH AS BATTERY-POWERED OR A/C-POWERED VOLT-METER, OHMMETER, ETC., OR ANY TYPE OF ELECTRICAL EQUIPMENT OTHER THAN SPECIFIED IN THIS MANUAL. DO NOT USE A NON-POWERED PROBE-TYPE TESTER.

INSTRUCTIONS IN THIS MANUAL MUST BE FOLLOWED CAREFULLY, OTHERWISE PERSONAL INJURY MAY RESULT.

CAUTION:

- **Never use the air bag assembly from another vehicle. Use only the air bag assembly for “UX”.**
- **The driver’s air bag assembly (Inflator module) for 1999 model has different characteristic to the parts for 1998 model.**
  When replace the driver’s air bag assembly, confirm the parts number and use only the parts for 1999 model. (The driver’s air bag assembly for 1999 model has “yellow” bar codes label. 1998 model has “white” bar codes label.)

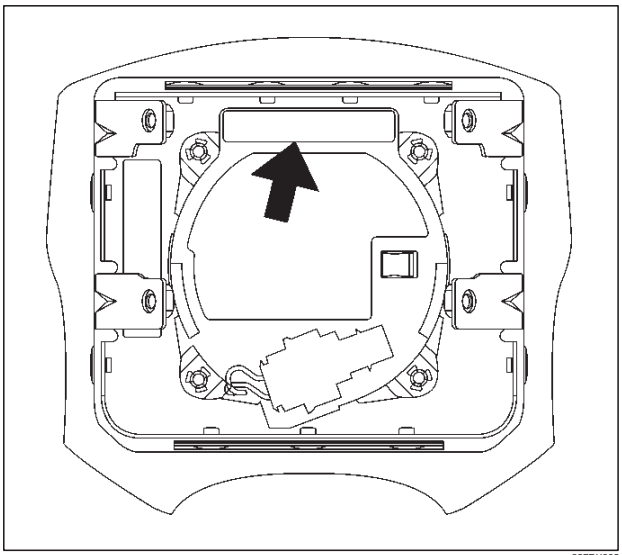

827RX003

SRS Connectors

CAUTION: The special tellow color connectors are used for supplemental restraint system-air bag circuit.
When removing the cable harness, do not pull the cables. Otherwise, cable disconnection may occur.
When connect the SRS connector, insert the connector completely. Imperfect locking may cause malfunction of SRS circuit.

Downloaded from www.Manualslib.com manuals search engine

Removal

To remove the connector, hold the cover insulator(1) and pull it. The cover insulator slides and lock will be released. Do not hold the socket insulator(2).

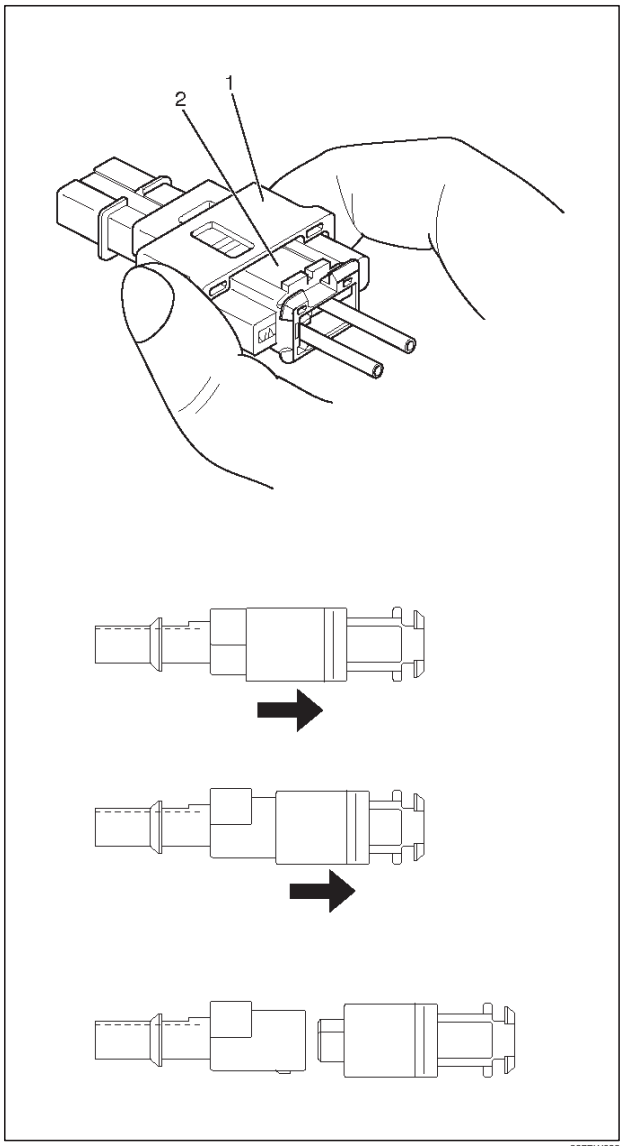

827RW028

Installation

To install the connector, hold the soket insulator(1) and insert it. The cover insulator slides and connector will be locked.
Do not hold the cover insulator(2).

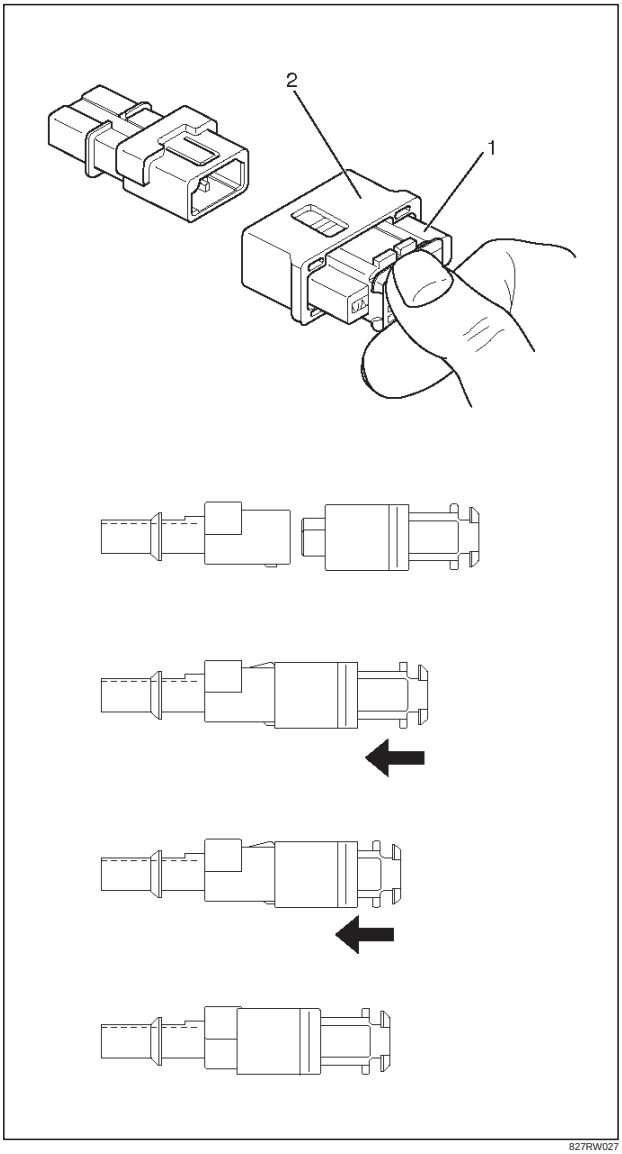

827RW027

Downloaded from www.Manualslib.com manuals search engine

Inflator Module

Inflator Module and Associated Parts

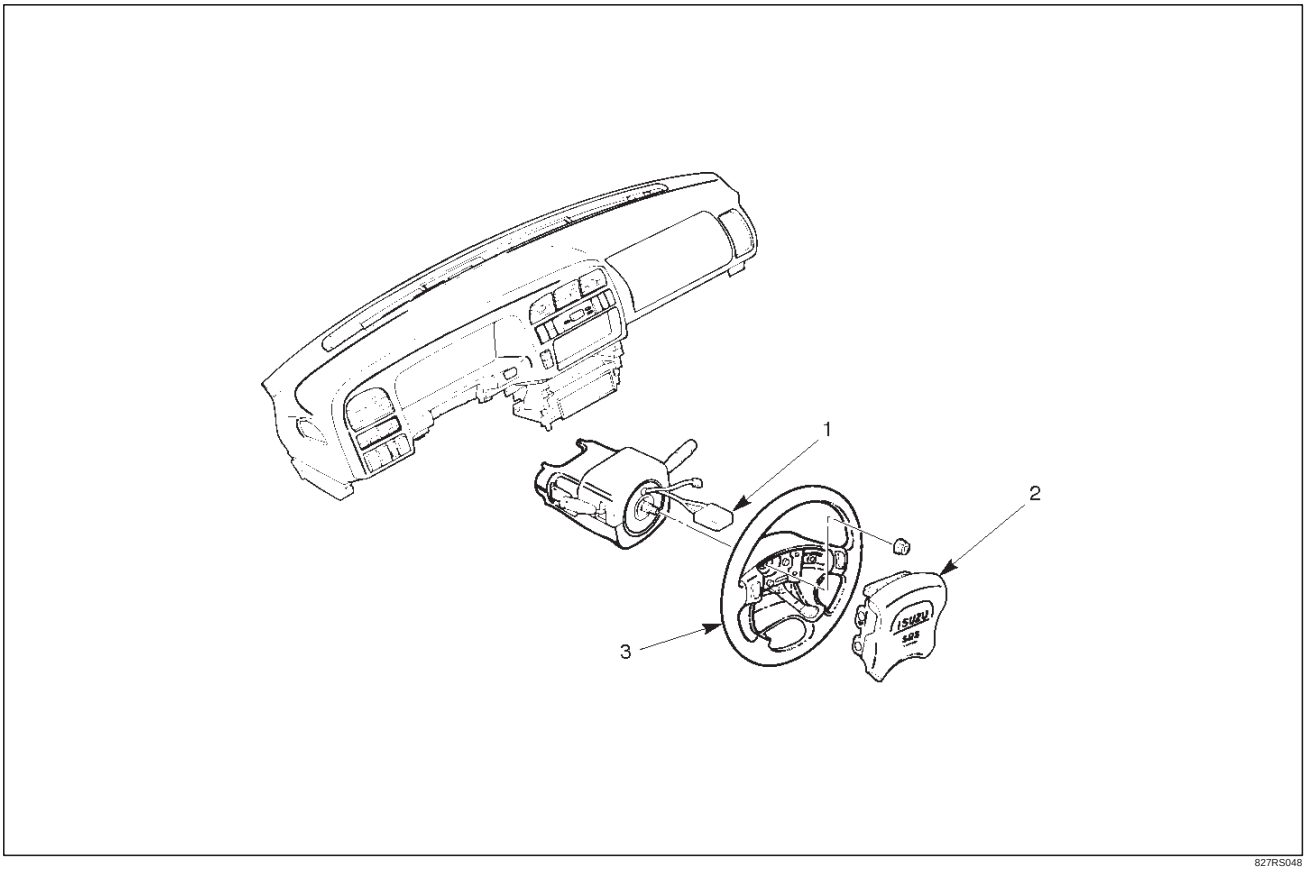

827RS048

Legend

(1) Module Connector
(2) Inflator Module
(3) Fixing Bolt

Removal

1. Turn the steering wheel so that the vehicle's wheels are pointing straight ahead.
2. Turn the ignition switch to "LOCK".
3. Disconnect the battery "–" terminal cable, and wait at least 5 minutes.
4. Disconnect the yellow 2-way SRS connector located under the steering column.
5. Loosen the inflator module fixing bolt from behind the steering wheel assembly using a TORX® driver or equivalent until the inflator module can be released from steering assembly .

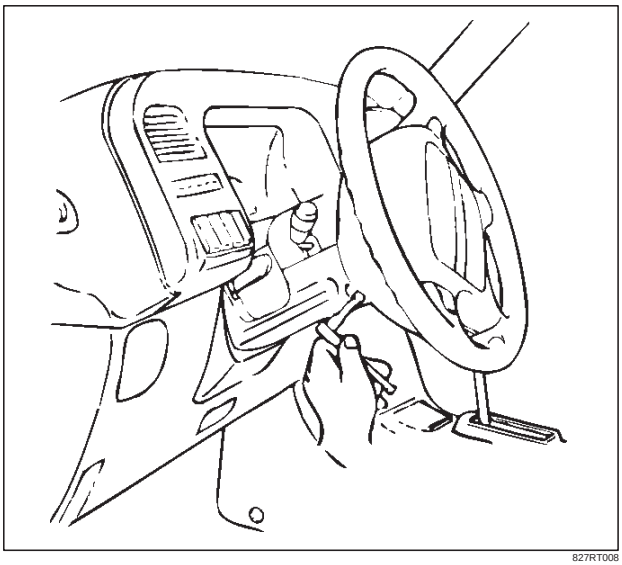

827RT008

Downloaded from www.Manualslib.com manuals search engine

6. Disconnect the yellow 2-way SRS connector located behind the inflator module.

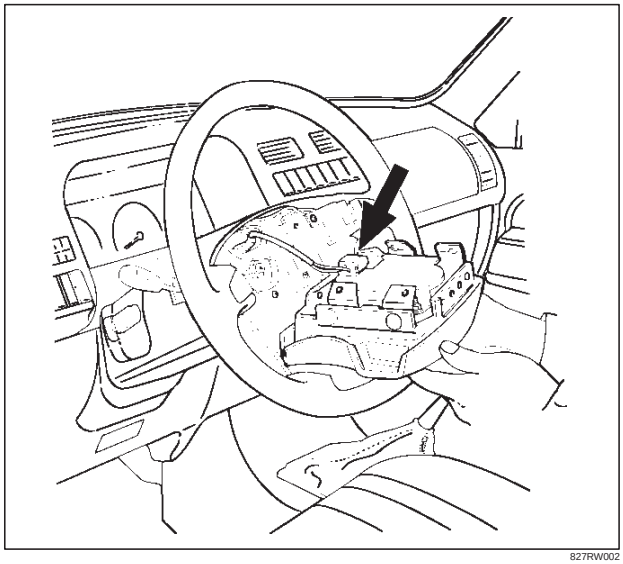

827RW002

7. Remove inflator module.

Inspection and Repair

WARNING: THE INFLATOR MODULE SHOULD ALWAYS BE CARRIED WITH THE URETHANE COVER AWAY FROM YOUR BODY AND SHOULD ALWAYS BE LAID ON A FLAT SURFACE WITH THE URETHANE SIDE UP. THIS IS NECESSARY BECAUSE A FREE SPACE IS PROVIDED TO ALLOW THE AIR CUSHION TO EXPAND IN THE UNLIKELY EVENT OF ACCIDENTAL DEPLOYMENT. OTHERWISE, PERSONAL INJURY MAY RESULT .

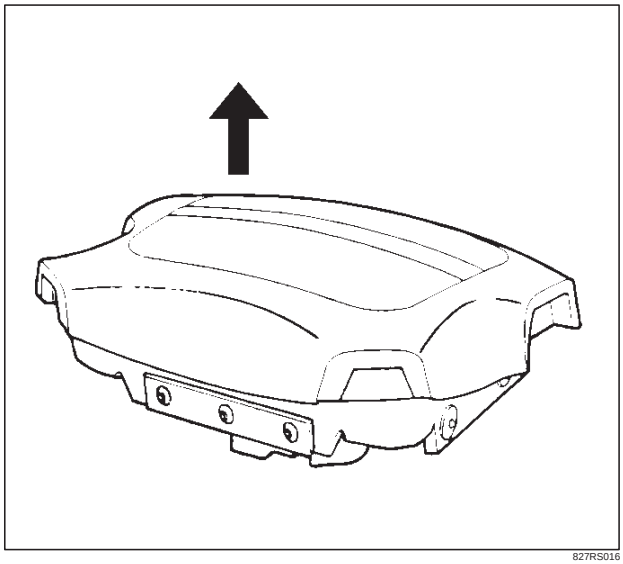

827RS016

The inflator module consists of a cover, air bag, inflator, and retainer. Inspect the inflator module mainly for the following:

- Check for holes, cracks, severe blemishes and deformation on the cover.
- Check that the retainer is not deformed.
- Check for defects such as damage and breakage in the lead wire for the igniter.

If an abnormality is found as the result of the inspection, replace the inflator module with a new one.

Installation

1. Install inflator module.

CAUTION:

- **Never use the air bag assembly from another vehicle. Use only the air bag assembly for "UX".**
- **The driver's air bag assembly (Inflator module) for 1999 model has different characteristic to the parts for 1998 model.**
  When replace the driver's air bag assembly, confirm the parts number and use only the parts for 1999 model. (The driver's air bag assembly for 1999 model has "yellow" bar codes label. 1998 model has "white" bar codes label.)

2. Support the module and carefully connect the module connector.

NOTE: Pass the lead wire through the tabs on the plastic cover (wire protector) of inflator to prevent lead wire from being pinched.

3. Secure the module with one bolt to relieve weight on the wire connector and tighten bolts to specified sequence as illustrated.

Torque: 8 N·m (69 lb in)

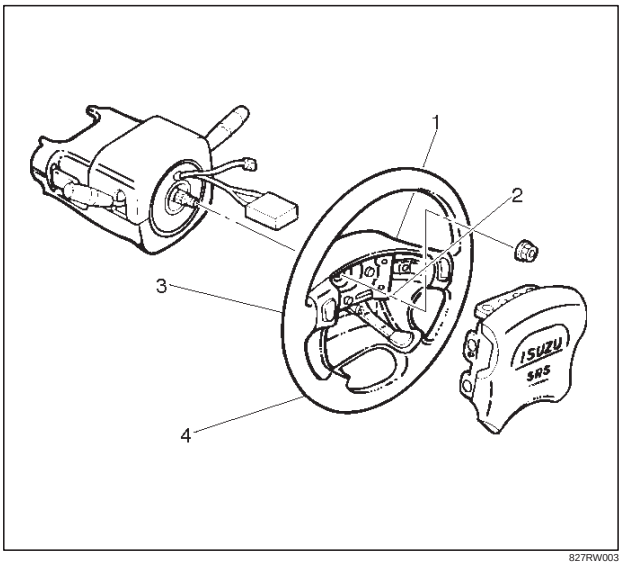

827RW003

4. Connect the yellow 2-way SRS connector located under the steering column.
5. Connect the battery "–" terminal cable.
6. Set ignition to "ON" while watching warning light. Light should flash 7 times and then go off. If lamp does not operate correctly, refer to Restraints section.

Downloaded from www.Manualslib.com manuals search engine

Steering Wheel

Steering Wheel and Associated Parts

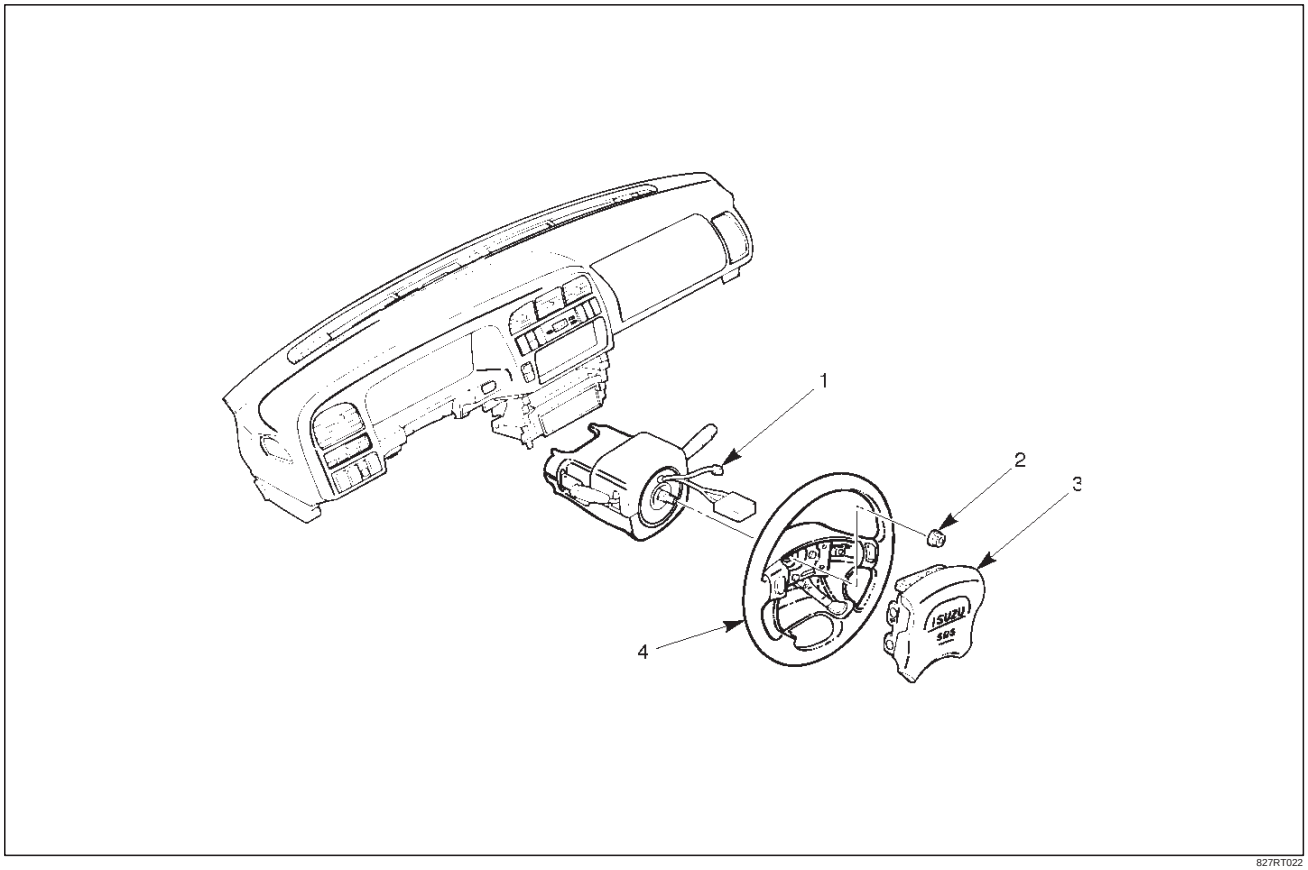

827RT022

Legend

(1) Horn Lead
(2) Steering Wheel Fixing Nut
(3) Inflator Module
(4) Steering Wheel

CAUTION: Once the steering column is removed from the vehicle, the column is extremely susceptible to damage. Dropping the column assembly on its end could collapse the steering shaft or loosen the slide block which maintains column rigidity. Leaning on the column assembly could cause the jacket to bend or deform. Any of the above damage could impair the column's collapsible design. If it is necessary to remove the steering wheel, use only the specified steering wheel puller. Under no conditions should the end of the shaft be hammered upon, as hammering could loosen slide block which maintains column rigidity.

Removal

1. Turn the steering wheel so that the vehicle's wheels are pointing straight ahead.
2. Turn the ignition switch to "LOCK".
3. Disconnect the battery "–" terminal cable, and wait at least 5 minutes.
4. Disconnect the yellow 2-way SRS connector located under the steering column.

Downloaded from www.Manualslib.com manuals search engine

5. Loosen the inflator module fixing bolt from behind the steering wheel assembly using a TORX® driver or equivalent until the inflator module can be released from steering assembly.

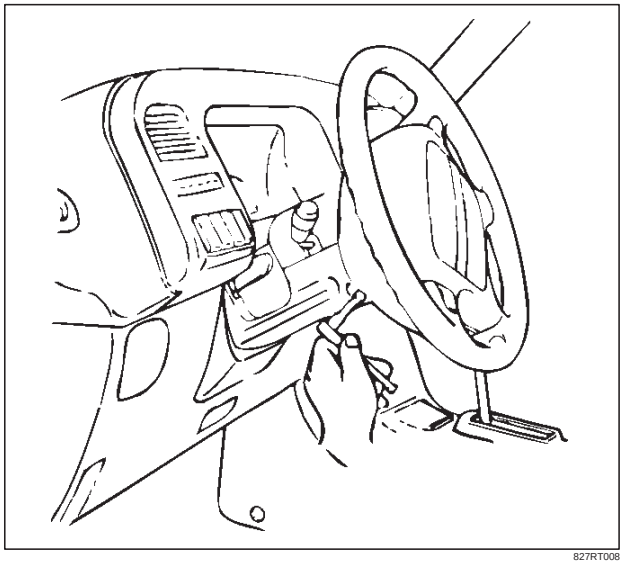

827RT008

6. Disconnect the yellow 2-way SRS connector located behind the inflator module.

WARNING: THE INFLATOR MODULE SHOULD ALWAYS BE CARRIED WITH THE URETHANE COVER AWAY FROM YOUR BODY AND SHOULD ALWAYS BE LAID ON A FLAT SURFACE WITH THE URETHANE SIDE UP. THIS IS NECESSARY BECAUSE A FREE SPACE IS PROVIDED TO ALLOW THE AIR CUSHION TO EXPAND IN THE UNLIKELY EVENT OF ACCIDENTAL DEPLOYMENT. OTHERWISE, PERSONAL INJURY MAY RESULT.

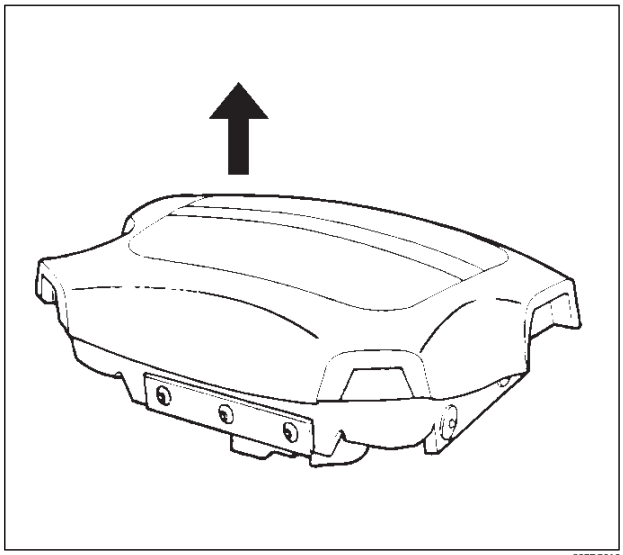

827RS016

7. Disconnect horn lead.
8. Remove steering wheel fixing nut.
9. Apply a setting mark (1) across the steering wheel and shaft so parts can be reassembled in their original position, then remove steering wheel.

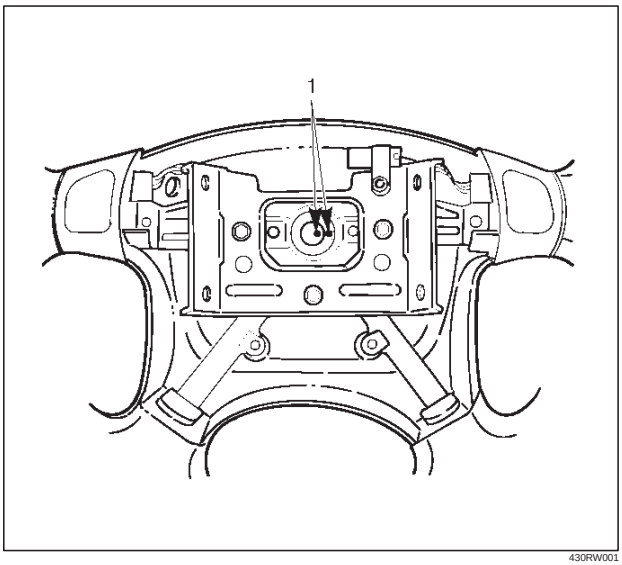

430RW001

10. Move the front wheels to the straight ahead position, then use steering wheel remover J–29752 to remove the steering wheel.

CAUTION: Never apply force to the steering wheel in direction of the shaft by using a hammer or other impact tools in an attempt to remove the steering wheel. The steering shaft is designed as an energy absorbing unit.

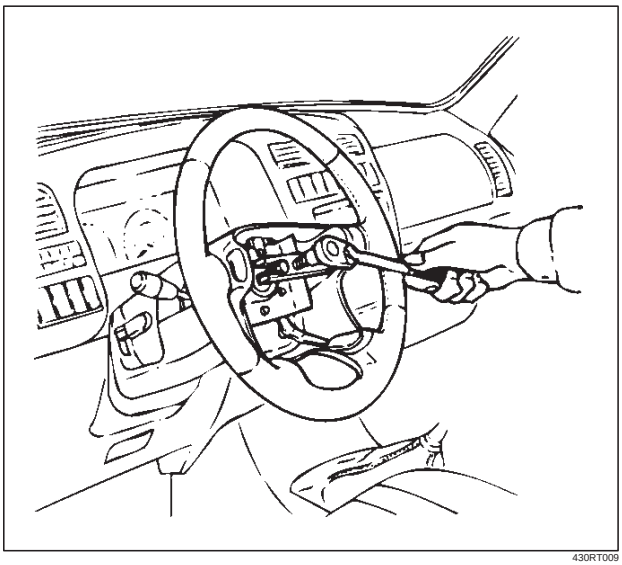

430RT009

Downloaded from www.Manualslib.com manuals search engine

Installation

1. Install steering wheel by aligning the setting marks made when removing.

CAUTION: Never apply force to the steering wheel in direction of the shaft by using a hammer or other impact tools in an attempt to remove the steering wheel. The steering shaft is designed as an energy absorbing unit.

2. Tighten the steering wheel fixing nut to the specified torque.

   Torque: 34 N·m (25 lb ft)

3. Connect horn lead.
4. Support the module and carefully connect the module connector.

CAUTION:

- **Never use the air bag assembly from another vehicle. Use only the air bag assembly for "UX".**
- **The driver's air bag assembly (Inflator module) for 1999 model has different characteristic to the parts for 1998 model.**
  When replace the driver's air bag assembly, confirm the parts number and use only the parts for 1999 model. (The driver's air bag assembly for 1999 model has "yellow" bar codes label. 1998 model has "white" bar codes label.)

NOTE: Pass the lead wire through the tabs on the plastic cover (wire protector) of inflator to prevent lead wire from being pinches.

- Secure the module with one bolt to relieve weight on the wire connector.
- Tighten bolts to specified sequence as illustrated.

Torque: 8 N·m (69 lb in)

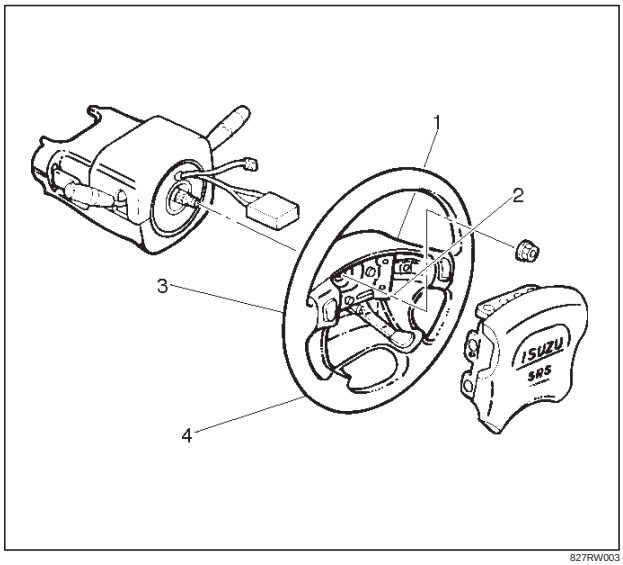

827RW003

5. Connect the yellow 2-way SRS connector located under the steering column.
6. Connect the battery "–" terminal cable.
7. Turn the ignition switch to "ON" while watching warning light. Light should flash 7 times and then go off. If lamp does not operate correctly, refer to Restraints section.

Downloaded from www.Manualslib.com manuals search engine

Combination Switch

Combination Switch and Associated Parts

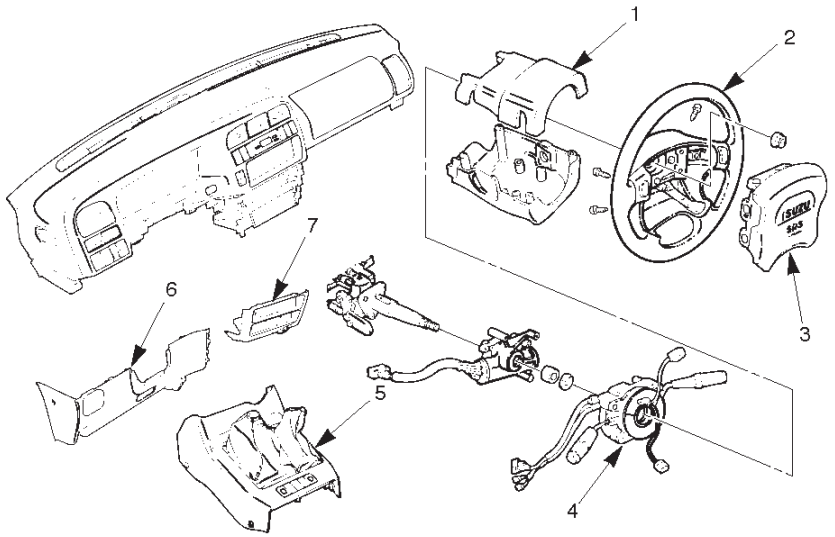

431RW001

Legend

(1) Steering Column Cover
(2) Steering Wheel
(3) Inflator Module
(4) Combination Switch and SRS Coil Assembly
(5) Front Console Assembly
(6) Steering Lower Cover
(7) Lower Cluster Assembly

Removal

1. Turn the steering wheel so that the vehicle's wheels are pointing straight ahead.
2. Turn the ignition switch to "LOCK".
3. Disconnect the battery "–" terminal cable, and wait at least 5 minutes.
4. Disconnect the yellow 2-way SRS connector located under the steering column.

CAUTION: The wheels of the vehicle must be straight ahead and the steering column in the "LOCK" position before disconnecting the steering wheel. Failure to do so will cause the coil assembly to become uncentered which will cause damage to the coil assembly.

5. Remove the transmission (for M/T) and transfer control lever knob. Disconnect the wiring harness connectors then remove front console assembly.
6. Remove lower cluster assembly.
7. Remove the engine hood opening lever, then remove steering lower cover.

Downloaded from www.Manualslib.com manuals search engine

8. Loosen the inflator module fixing bolt from behind the steering wheel assembly using a TORX® driver or equivalent until the inflator module can be released from steering assembly. Disconnect the yellow 2-way SRS connector located behind the inflator module, then remove inflator module.

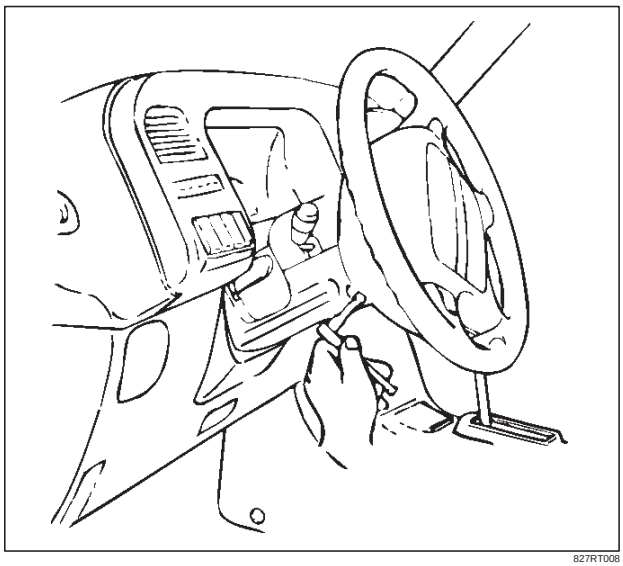

827RT008

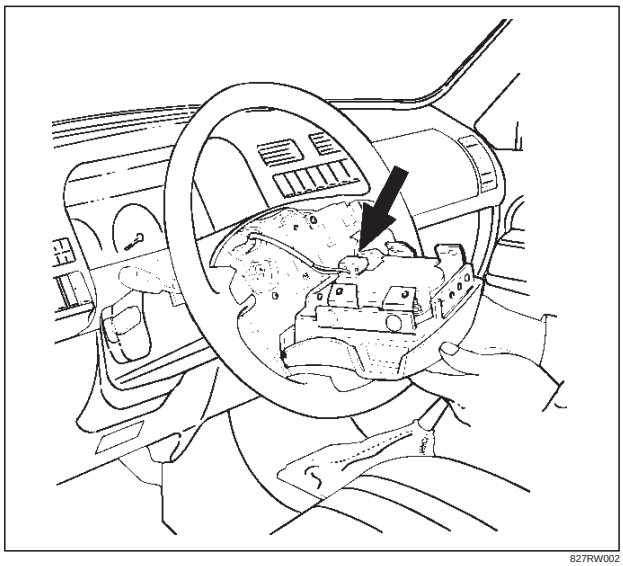

827RW002

WARNING: THE INFLATOR MODULE SHOULD ALWAYS BE CARRIED WITH THE URETHANE COVER AWAY FROM YOUR BODY AND SHOULD ALWAYS BE LAID ON A FLAT SURFACE WITH THE URETHANE SIDE UP. THIS IS NECESSARY BECAUSE A FREE SPACE IS PROVIDED TO ALLOW THE AIR CUSHION TO EXPAND IN THE UNLIKELY EVENT OF ACCIDENTAL DEPLOYMENT. OTHERWISE, PERSONAL INJURY MAY RESULT.

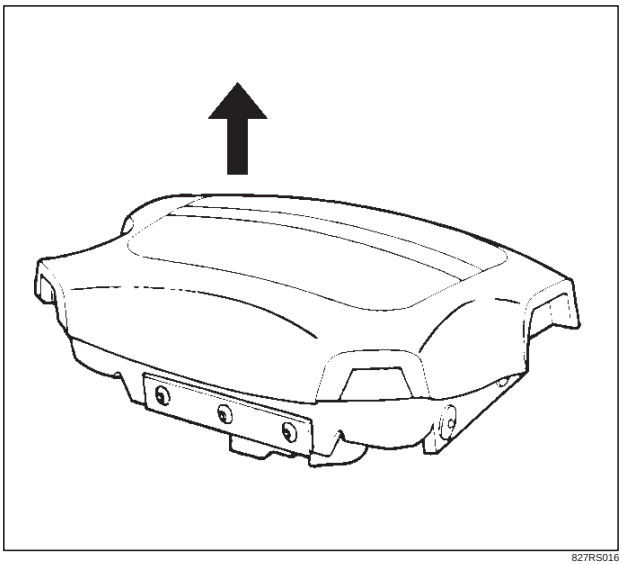

827RS016

9. Apply a setting mark (1) across the steering wheel and shaft so parts can be reassembled in their original position. Move the front wheels to the straight ahead posision, then use steering wheel remover J–29752 to remove the steering wheel.

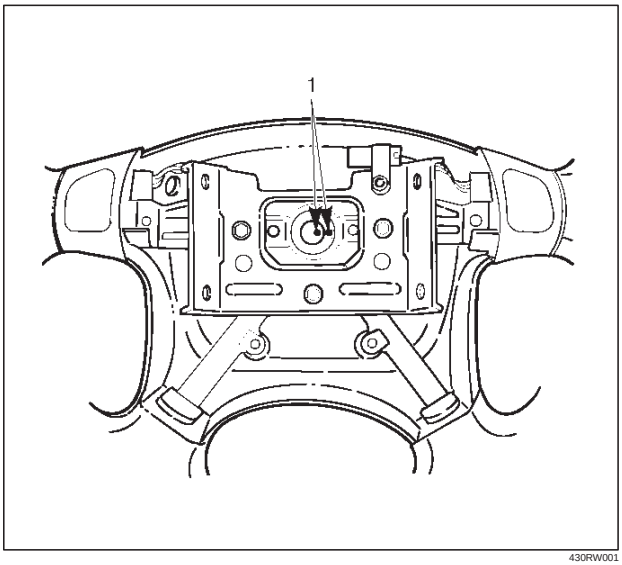

430RW001

CAUTION: Never apply force to the steering wheel in direction of the shaft by using a hammer or other impact tools in an attempt to remove the steering wheel. The steering shaft is designed as an energy absorbing unit.

Downloaded from www.Manualslib.com manuals search engine

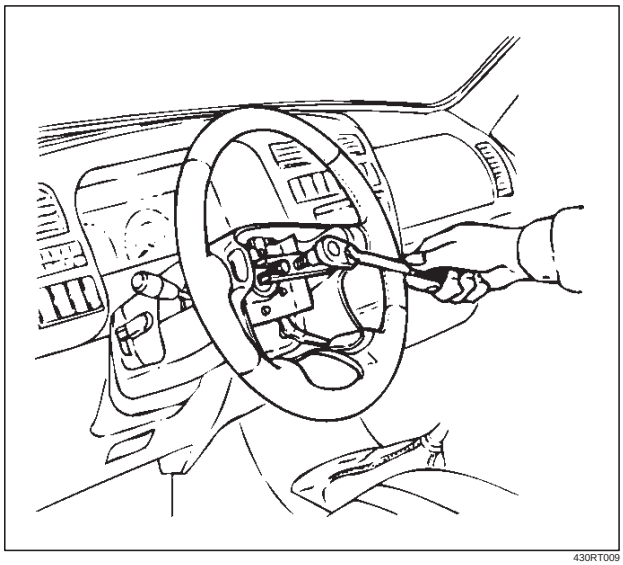

430RT009

10. Remove steering column cover.
11. Disconnect the wiring harness connectors located under the steering column, then remove combination switch and SRS coil assembly.

NOTE: The SRS coil is a part of the combination switch assembly, which can not be replaced separately. Therefore, be sure not to remove the SRS coil from the combination switch assembly.

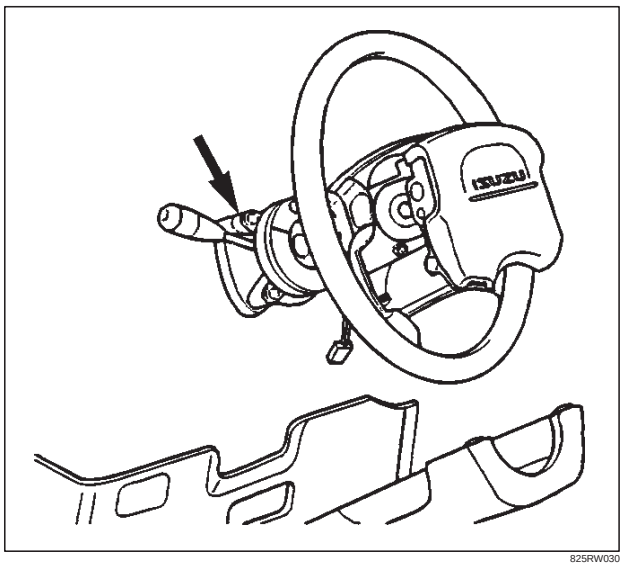

825RW030

Installation

1. Install combination switch and SRS coil assembly. After installation of combination switch assembly, connect the combination switch wiring harness connector and the SRS 2-way connector located under the steering column. Then turn the SRS coil counterclockwise to full, return about 3 turns and align the neutral mark.

CAUTION: When turning the SRS coil counterclockwise to full, stop turning if resistance is felt. Forced further turning may damage to the cable in the SRS coil.

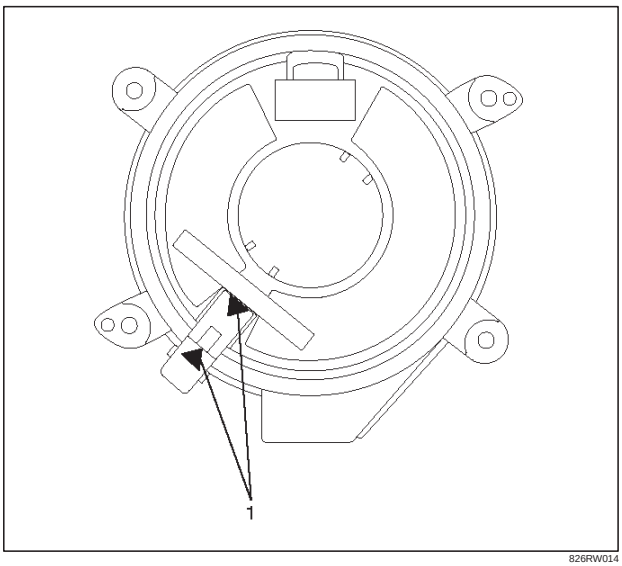

826RW014

2. When installing the steering column cover, be sure to route each wire harness as illustrated so that the harnesses do not catch on any moving parts.

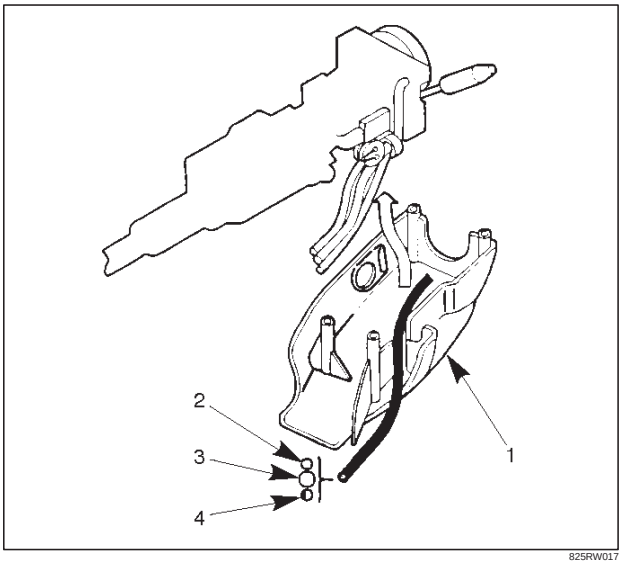

825RW017

Legend

(1) Steering Column Cover
(2) Starter Switch Harness
(3) Combination Switch Harness
(4) Inflator Module Harness

3. Align the setting marks made when removing then install steering wheel.

CAUTION: Never apply force to the steering wheel in direction of the shaft by using a hammer or other impact tools in an attempt to remove the steering wheel. The steering shaft is designed as an energy absorbing unit.

Downloaded from www.Manualslib.com manuals search engine

4. Tighten the steering wheel fixing nut to the specified torque.

   Torque: 34 N·m (25 lb ft)

5. Support the inflator module and carefully connect the module connector.

CAUTION:

- **Never use the air bag assembly from another vehicle. Use only the air bag assembly for "UX".**
- **The driver's air bag assembly (Inflator module) for 1999 model has different characteristic to the parts for 1998 model.**
  When replace the driver's air bag assembly, confirm the parts number and use only the parts for 1999 model. (The driver's air bag assembly for 1999 model has "yellow" bar codes label. 1998 model has "white" bar codes label.)

NOTE: Pass the lead wire through the tabs on the plastic cover (wire protector) of inflator to prevent lead wire from being pinched.

6. Secure the module with one bolt to relieve weight on the wire connector.
7. Tighten bolts to specified sequence as illustrated.

   Torque: 8 N·m (69 lb in)

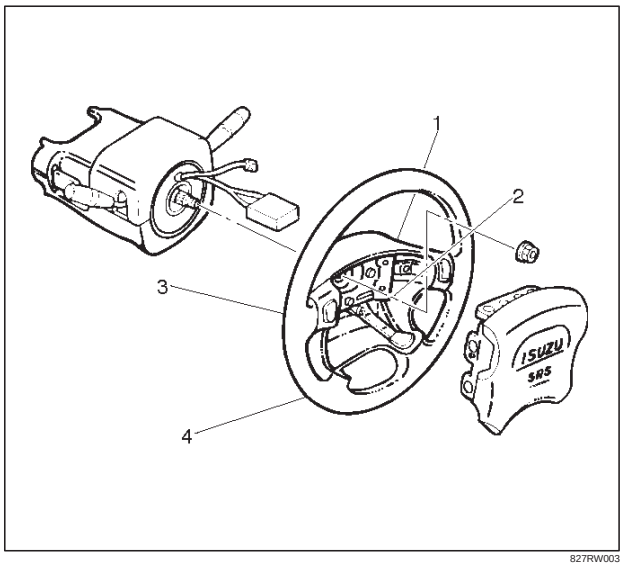

827RW003

8. Install steering lower cover then Install the engine hood opening lever.
9. Install lower cluster assembly
10. Install the transmission (for M/T) and transfer control lever knob, then install front console assembly.
11. Connect the wiring harness connectors.
12. Connect the battery "–" terminal cable.
13. Turn the ignition switch to "ON" while watching warning light and check the light should flash 7 times and then go off. If lamp does not operate correctly, refer to Restraints section.

Downloaded from www.Manualslib.com manuals search engine

Lock Cylinder

Lock Cylinder and Associated Parts

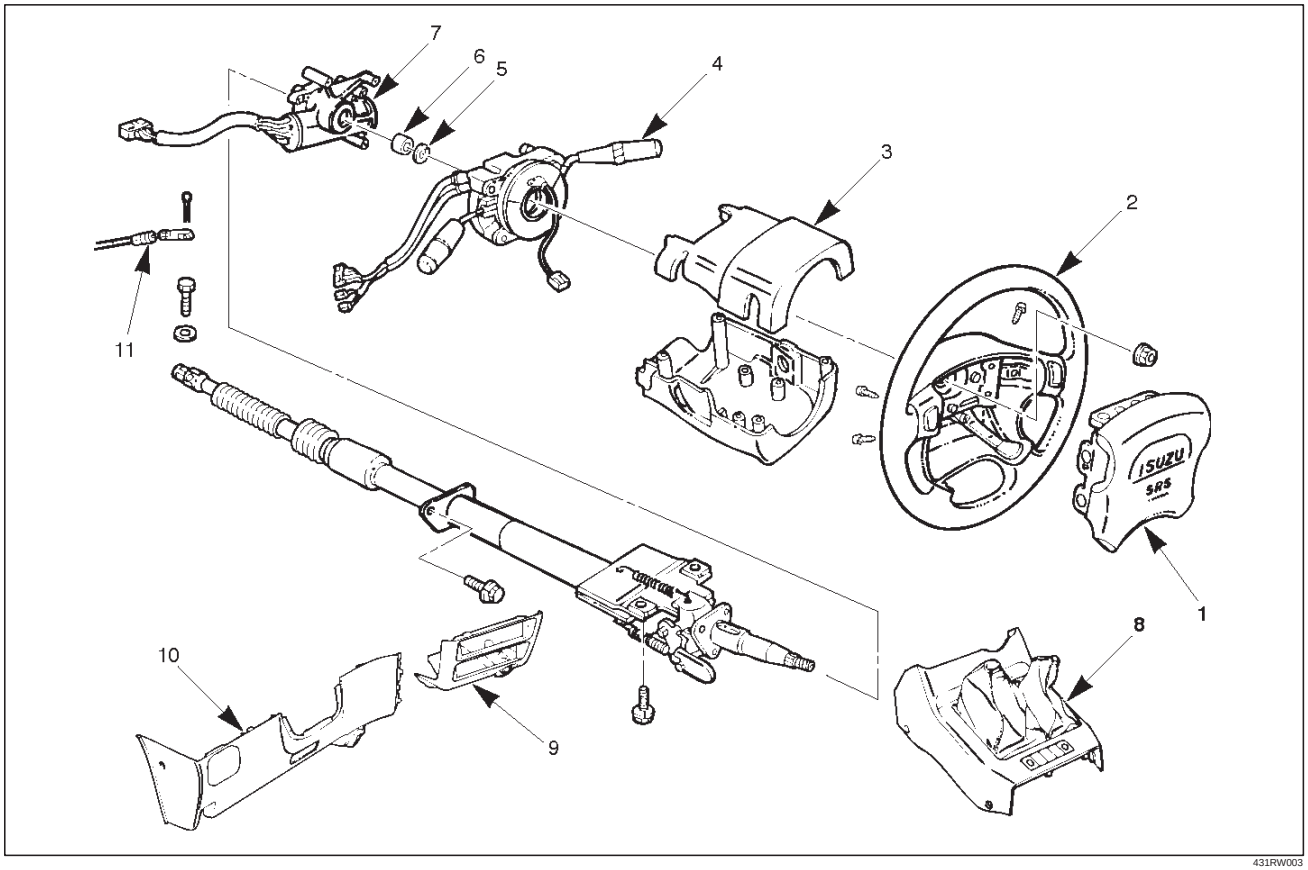

431RW003

Legend

(1) Inflator Module
(2) Steering Wheel
(3) Steering Column Cover
(4) Combination Switch and SRS Coil Assembly
(5) Snap Ring
(6) Cushion Rubber
(7) Lock Cylinder Assembly
(8) Front Console Assembly
(9) Lower Cluster Assembly
(10) Steering Lower Cover
(11) Shift Lock Cable (for A/T)

Removal

1. Turn the steering wheel so that the vehicle's wheels are pointing straight ahead.
2. Turn the ignition switch to "LOCK".
3. Disconnect the battery "–" terminal cable, and wait at least 5 minutes.
4. Disconnect the yellow 2-way SRS connector located under the steering column.

CAUTION: The wheels of the vehicle must be straight ahead and the steering column in the "LOCK" position before disconnecting the steering wheel. Failure to do so will cause the coil assembly to become uncentered which will cause damage to the coil assembly.

5. Remove the transmission (for M/T) and transfer control lever knob and disconnect the wiring harness connectors, then remove front console assembly.
6. Remove lower cluster assembly.
7. Remove the engine hood opening lever and steering lower cover.

Downloaded from www.Manualslib.com manuals search engine

8. Loosen the inflator module fixing bolt from behind the steering wheel assembly using a TORX® driver or equivalent until the inflator module can be released from steering assembly.

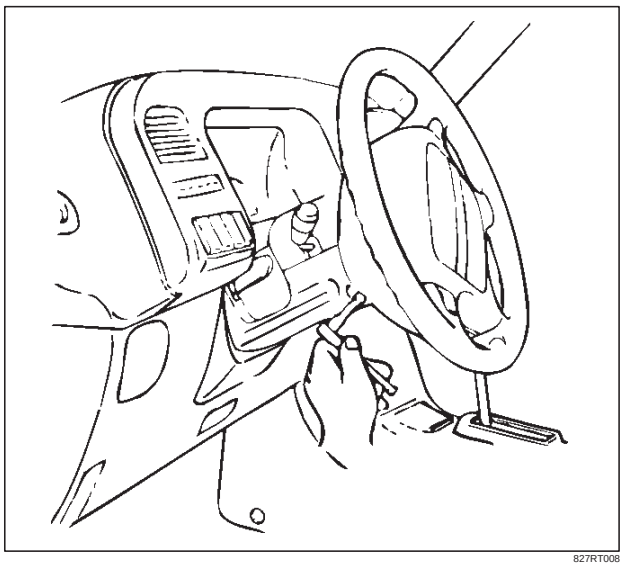

827RT008

9. Disconnect the yellow 2-way SRS connector located behind the inflator module.

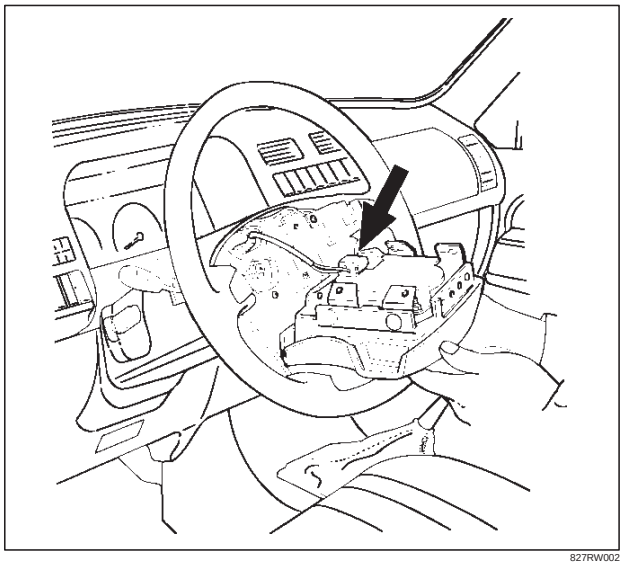

827RW002

10. Apply a setting mark (1) across the steering wheel and shaft so parts can be reassembled in their original position.

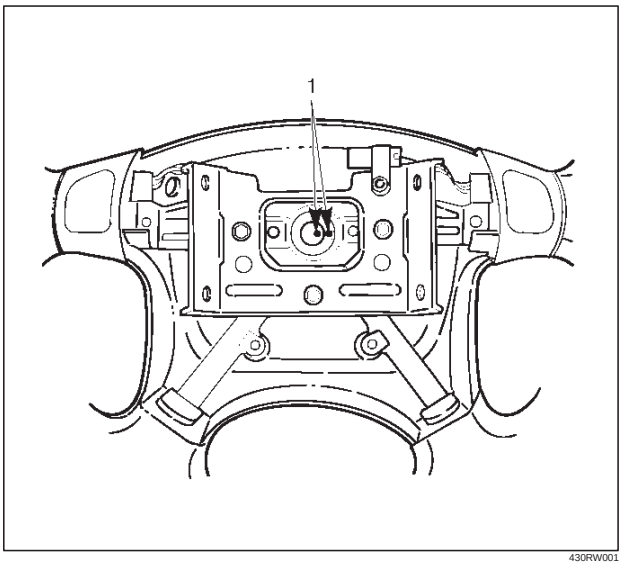

430RW001

11. Move the front wheels to the straight ahead position, then use steering wheel remover J–29752 to remove the steering wheel.

CAUTION: Never apply force to the steering wheel in direction of the shaft by using a hammer or other impact tools in an attempt to remove the steering wheel. The steering shaft is designed as an energy absorbing unit.

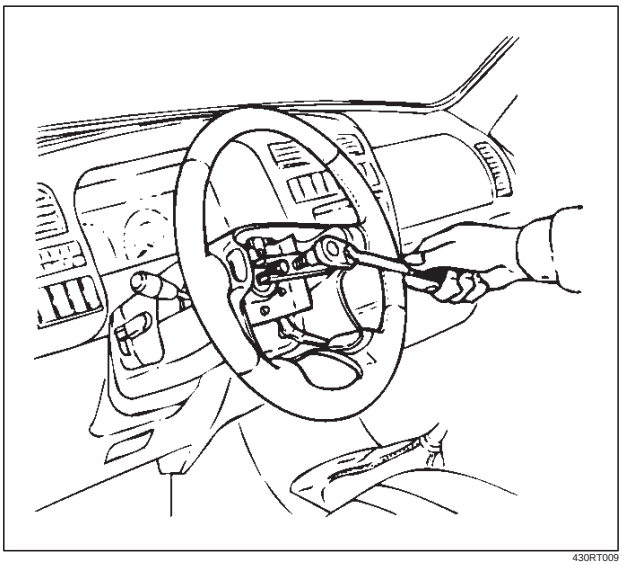

430RT009

Downloaded from www.Manualslib.com manuals search engine

WARNING: THE INFLATOR MODULE SHOULD ALWAYS BE CARRIED WITH THE URETHANE COVER AWAY FROM YOUR BODY AND SHOULD ALWAYS BE LAID ON A FLAT SURFACE WITH THE URETHANE SIDE UP. THIS IS NECESSARY BECAUSE A FREE SPACE IS PROVIDED TO ALLOW THE AIR CUSHION TO EXPAND IN THE UNLIKELY EVENT OF ACCIDENTAL DEPLOYMENT. OTHERWISE, PERSONAL INJURY MAY RESULT.

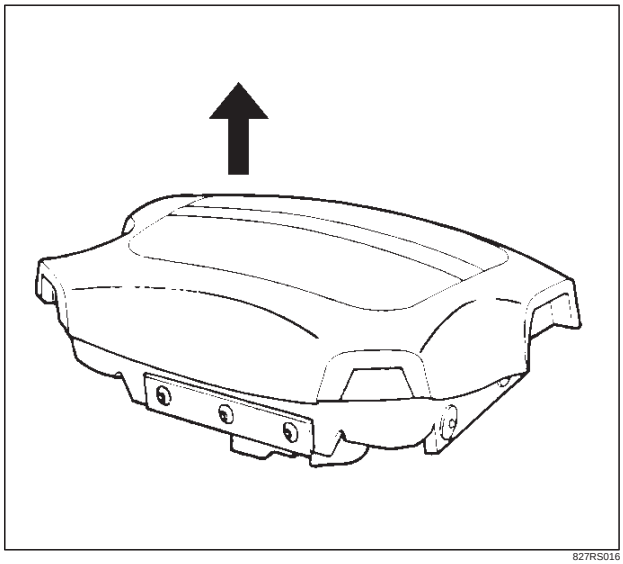

827RS016

12. Remove steering column cover.
13. Disconnect the wiring harness connectors located under the steering column.
14. Remove the combination switch assembly with SRS coil.

NOTE: The SRS coil is a part of the combination switch assembly, which can not be replaced separately. Therefore, be sure not to remove the SRS coil from the combination switch assembly.

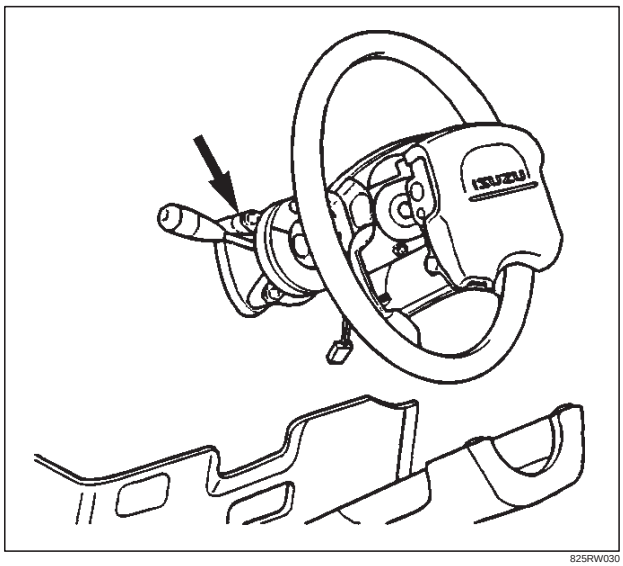

825RW030

15. Remove snap ring.
16. Remove cushion rubber.
17. Remove shift lock cable (for A/T).
18. Disconnect the starter switch harness connector located under the steering column, then remove lock cylinder assembly.

Installation

1. Install lock cylinder assembly.
2. Install shift lock cable (for A/T).
3. Install cushion rubber.
4. Install snap ring.
5. Install Combination switch and SRS coil assembly. After installation of combination switch assembly, connect the combination switch wiring harness connector and the SRS 2-way connector located under the steering column.
6. Turn the SRS coil counterclockwise to full, return about 3 turns and align the neutral mark.

CAUTION: When turning the SRS coil counterclockwise to full, stop turning if resistance is felt. Forced further turning may damage to the cable in the SRS coil.

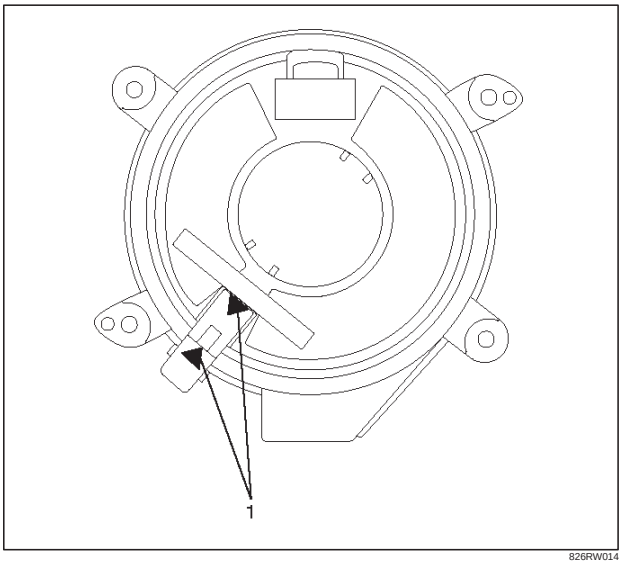

826RW014

Downloaded from www.Manualslib.com manuals search engine

7. When installing the steering column cover, be sure to route each wire harness as illustrated so that the harnesses do not catch on any moving parts.

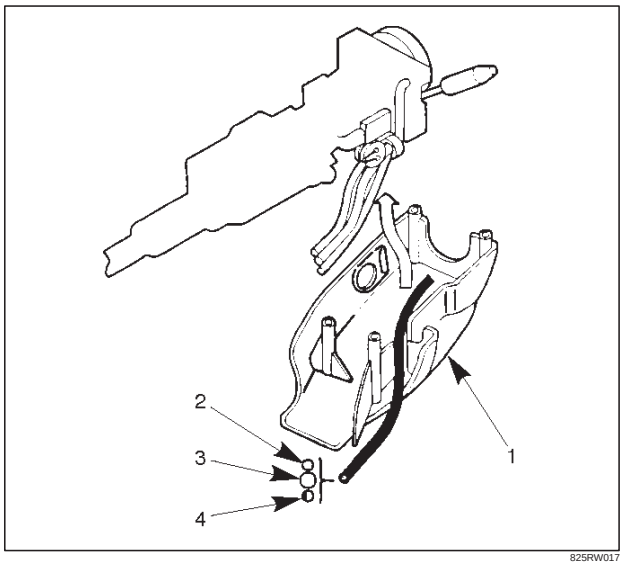

825RW017

Legend

(1) Steering Column Cover
(2) Starter Switch Harness
(3) Combination Switch Harness
(4) Inflator Module Harness

8. Install steering wheel by aligning the setting marks made during removal.

CAUTION: Never apply force to the steering wheel in direction of the shaft by using a hammer or other impact tools in an attempt to remove the steering wheel. The steering shaft is designed as an energy absorbing unit.

9. Tighten the steering wheel fixing nut to the specified torque.

Torque: 34 N·m (25 lb ft)

10. Support inflator module and carefully connect the module connector, then install inflator module.

CAUTION:

- **Never use the air bag assembly from another vehicle. Use only the air bag assembly for "UX".**
- **The driver's air bag assembly (Inflator module) for 1999 model has different characteristic to the parts for 1998 model.**
  When replace the driver's air bag assembly, confirm the parts number and use only the parts for 1999 model. (The driver's air bag assembly for 1999 model has "yellow" bar codes label. 1998 model has "white" bar codes label.)

NOTE: Pass the lead wire through the tabs on the plastic cover (wire protector) of inflator to prevent lead wire from being pinched.

11. Secure the inflator module with one bolt to relieve weight on the wire connector.

12. Tighten fixing bolts to specified sequence as illustrated.

Torque: 8 N·m (69 lb in)

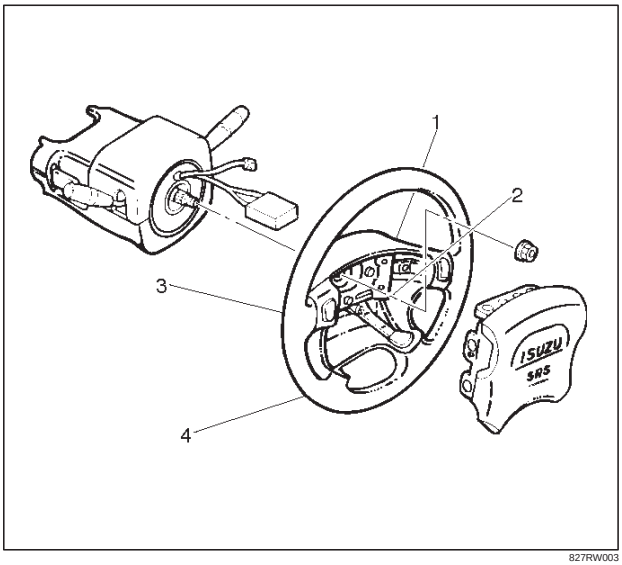

827RW003

13. Install steering lower cover, then install the engine hood opening lever.
14. Install lower cluster assembly.
15. Connect the wiring harness connectors, then install front console assembly and install the transmission (for M/T) and transfer control lever knob.
16. Connect the yellow 2-way SRS connector located under the steering column.
17. Connect the battery "–" terminal cable.

System Inspection

Turn the ignition switch to "ON" while watching warning light.The light should flash 7 times and then go off. If lamp does not operate correctly, refer to Restraints section .

Downloaded from www.Manualslib.com manuals search engine

Steering Column

Steering Column and Associated Parts

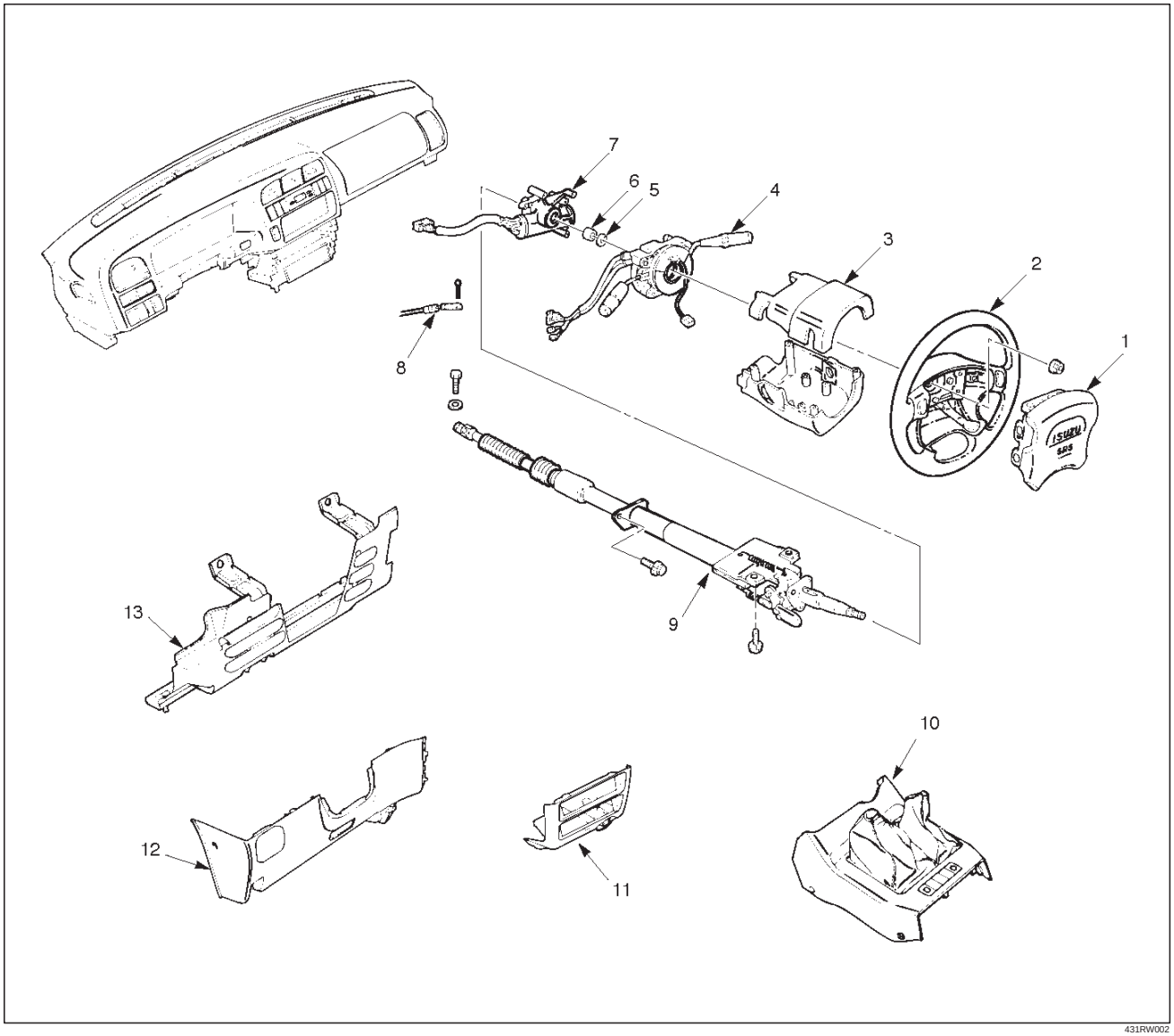

Legend

(1) Inflator Module
(2) Steering Wheel
(3) Steering Column Cover
(4) Combination Switch and SRS Coil Assembly
(5) Snap Ring
(6) Cushion Rubber
(7) Lock Cylinder Assembly
(8) Shift Lock Cable (For A/T)
(9) Steering Column Assembly
(10) Front Console Assembly
(11) Lower Cluster Assembly
(12) Steering Lower Cover
(13) Driver Knee Bolster (reinforcement)

Removal

1. Turn the steering wheel so that the vehicle's wheels are pointing straight ahead.
2. Turn the ignition switch to "LOCK".
3. Disconnect the battery "–" terminal cable, and wait at least 5 minutes.
4. Disconnect the yellow 2-way SRS connector located under the steering column.

Downloaded from www.Manualslib.com manuals search engine

CAUTION: The wheel of the vehicle must be straight ahead and the steering column in the "LOCK" position before disconnecting the steering column from the steering gear. Failure to do so will cause the SRS coil assembly to become uncentered which will cause damage to the SRS coil assembly.

5. Disconnect the transmission (for M/T) and transfer control lever knob.
6. Disconnect the wiring harness connectors.
7. Remove front console assembly.
8. Remove lower cluster assembly.
9. Remove the engine hood opening lever, then remove steering lower cover.
10. Remove driver knee bolster (reinforcement).
11. Loosen the inflator module fixing bolt from behind the steering wheel assembly using a TORX® driver or equivalent until the inflator module can be released from steering assembly.

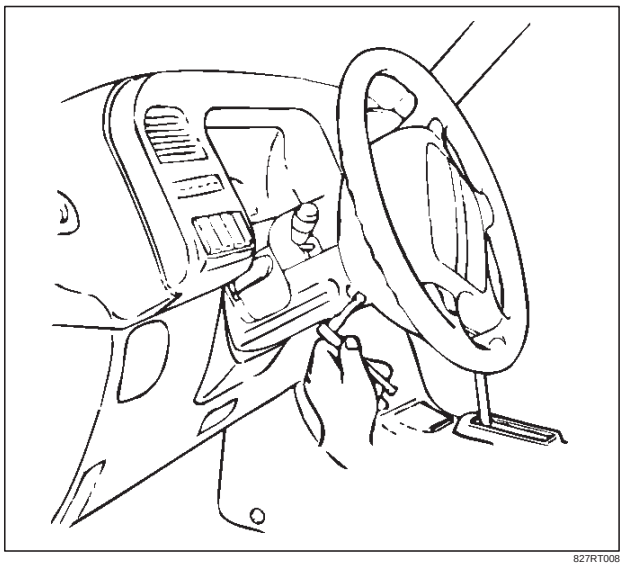

827RT008

12. Disconnect the yellow 2-way SRS connector located behind the inflator module.
13. Remove inflator module.

WARNING: THE INFLATOR MODULE SHOULD ALWAYS BE CARRIED WITH THE URETHANE COVER AWAY FROM YOUR BODY AND SHOULD ALWAYS BE LAID ON A FLAT SURFACE WITH THE URETHANE SIDE UP. THIS IS NECESSARY BECAUSE A FREE SPACE IS PROVIDED TO ALLOW THE AIR CUSHION TO EXPAND IN THE UNLIKELY EVENT OF ACCIDENTAL DEPLOYMENT. OTHERWISE, PERSONAL INJURY MAY RESULT.

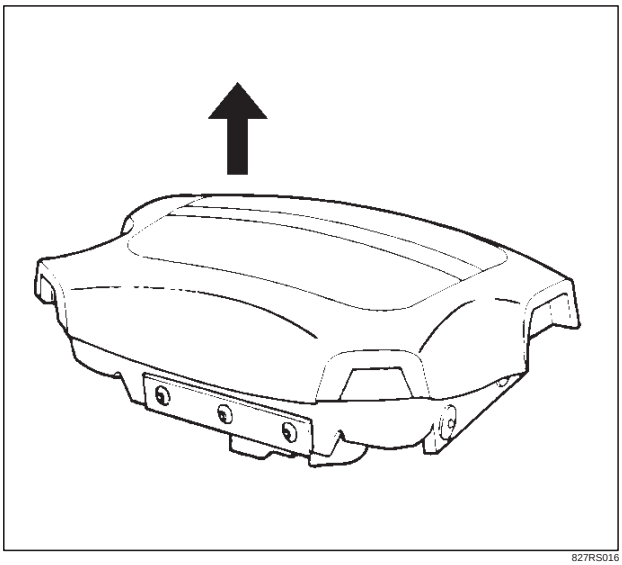

827RS016

14. Apply a setting mark (1) across the steering wheel and shaft so parts can be reassembled in their original position. Move the front wheels to the straight ahead position, then use steering wheel remover J–29752 to remove the steering wheel.

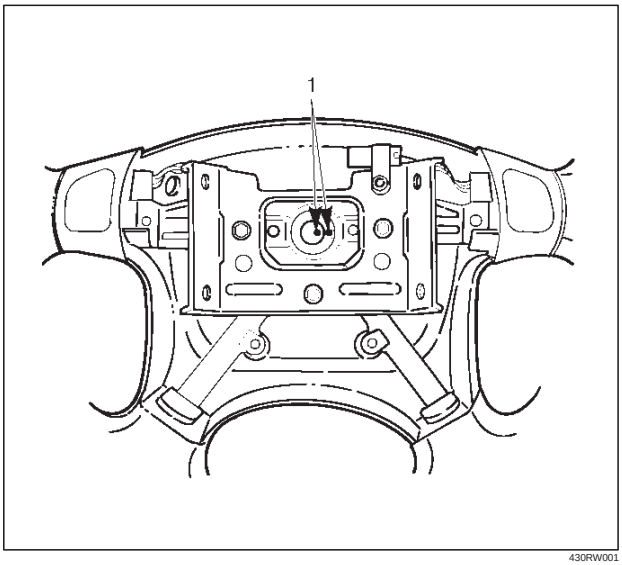

430RW001

Downloaded from www.Manualslib.com manuals search engine

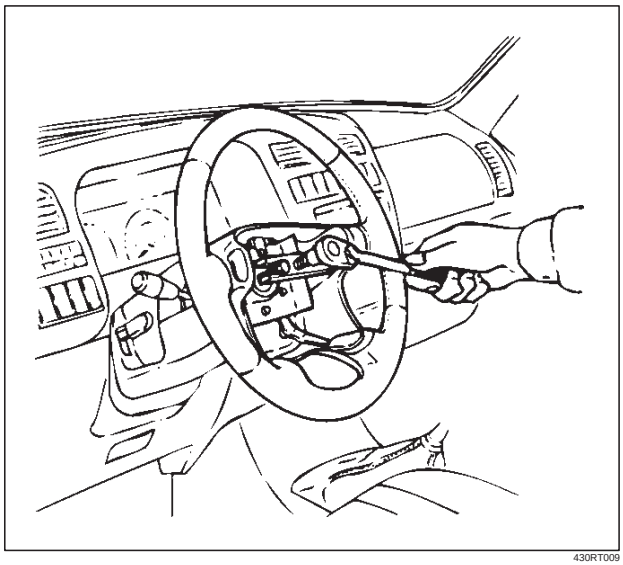

430RT009

15. Remove steering column cover.
16. Disconnect the wiring harness connectors located under the steering column.
17. Remove the combination switch assembly with SRS coil.

NOTE: SRS coil is a part of combination switch assembly, which can not be replaced singly. Therefore, be sure not to remove the SRS coil from the combination switch assembly.

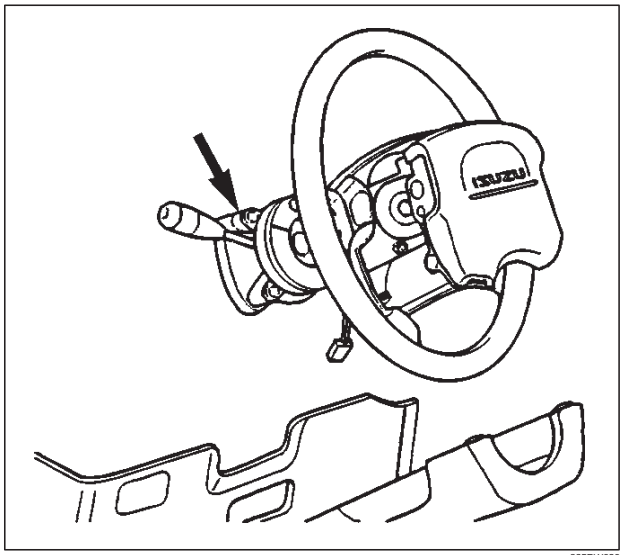

825RW030

18. Remove snap ring.
19. Remove cushion rubber.
20. Remove shift lock cable (For A/T).
21. Disconnect the starter switch harness connector located under the steering column, then remove lock cylinder assembly.
22. Apply a setting mark (1) across the universal joint and steering shaft to reassemble the parts in their original position, then remove steering column assembly.

NOTE: A setting mark can be easily made if the shaft is withdrawn a little by loosening the steering shaft universal joint.

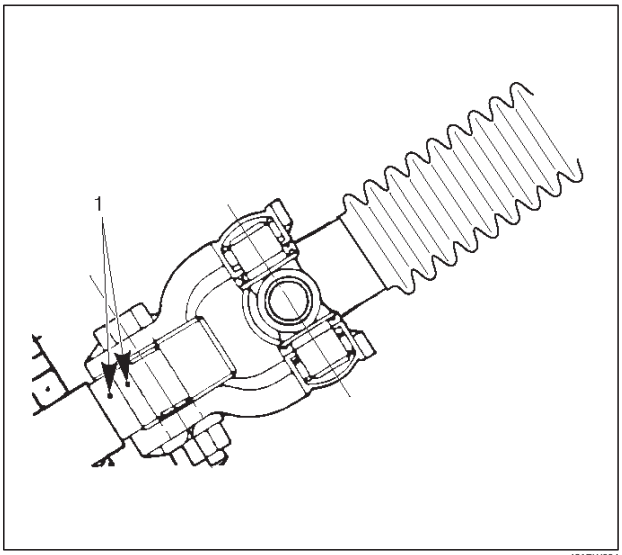

431RW004

Inspection

If the abnormal conditions are found through inspection, replace the steering column assembly.

Column Capsule

Check capsules on steering column bracket assembly; all must be securely seated in bracket slots and checked for any loose conditions when pushed or pulled by hand.

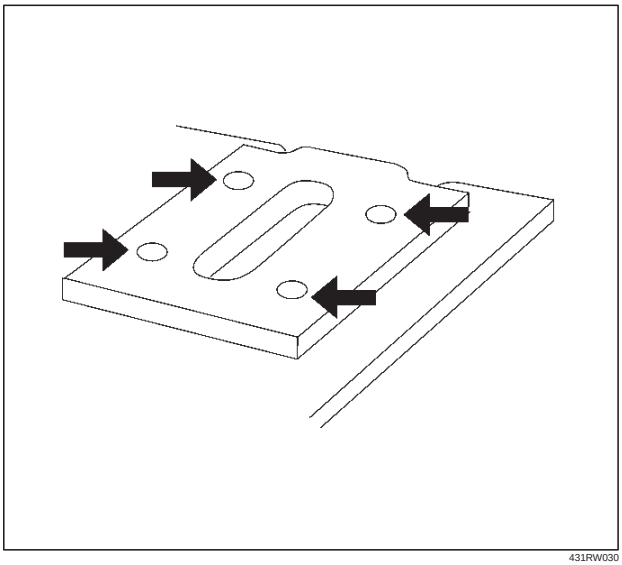

431RW030

Downloaded from www.Manualslib.com manuals search engine

Check clearance between capsule and bracket. It must be within 1 mm (0.039 in).

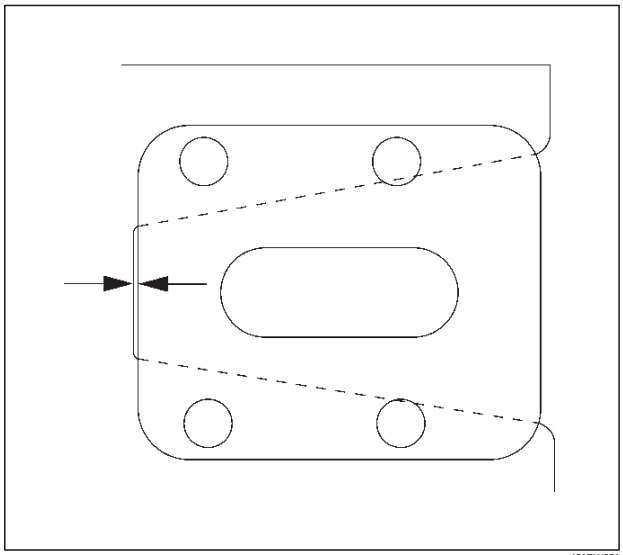

431RW031

Column Tube

Check for collapse by measuring the distance as shown in the figure.

Standard distance: 162.2–165.8 mm (6.386–6.528 in)

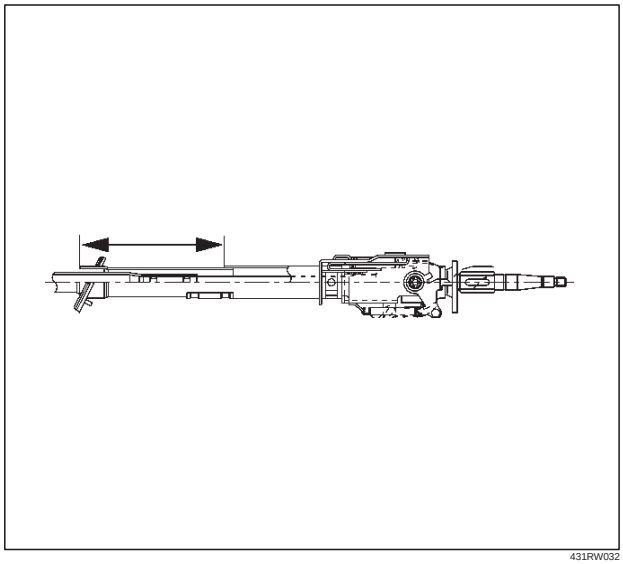

431RW032

Column Universal Joint for Tilt Mechanism

If the resistance is felt when checked by rotate the joint, replace the steering column assembly.

Sheared Injected Plastic Pin

Check the sheared injected plastic pins for any loose conditions or damage.

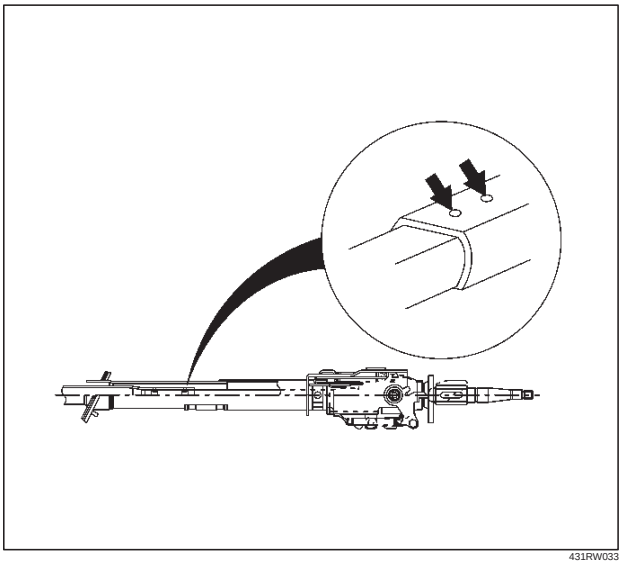

431RW033

Shaft Length

Check the shaft length from the upper end of the slide joint to the end of the shaft. If column length is not in specifications, steering column should be replaced.

Standard length: 308–310 mm (12.126–12.205 in)

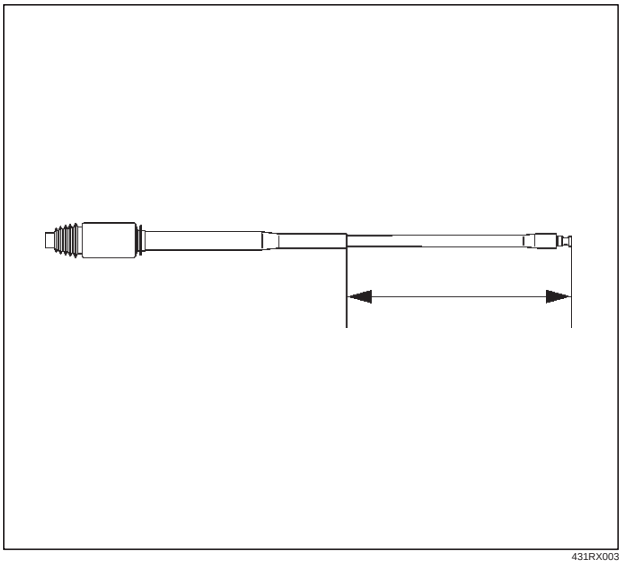

431RX003

Shaft Universal Joint (Lower End)

If the resistance is felt when checked by rotate the joint, replace the steering column assembly.

Shaft Bellows Pipe

Check the shaft bellows pipe for bend by using straight edge. Measure the clearance between the bellows pipe and the straight edge (at center of the bellows pipe).

Standard: Less than 1 mm (0.039 in)

Downloaded from www.Manualslib.com manuals search engine

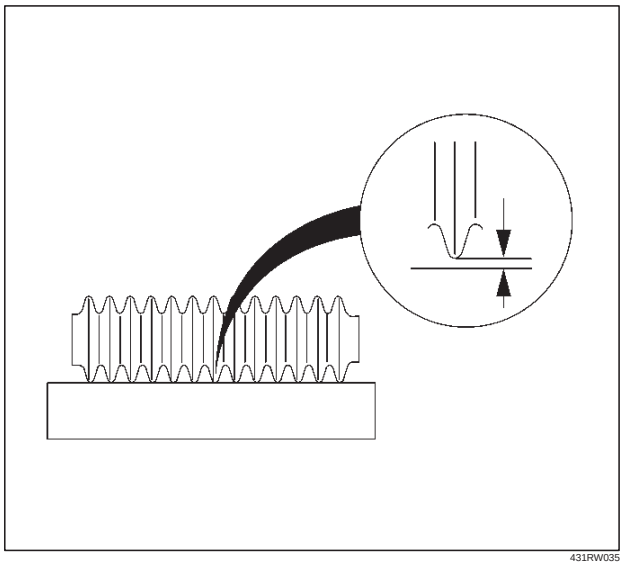

431RW035

Tilt Mechanism

Tilt mechanism should moves smoothly.
While locked the tilt mechanism, be sure the steering column latch securely by pushing the steering wheel upward and downward.

Installation

1. Install steering column assembly.
2. Align the setting marks on the universal joint and steering shaft made during removal.
3. Tighten the steering column fixing bolt (dash panel) to the specified torque.

   Torque: 19 N·m (14 lb ft)
4. Tighten the steering column fixing bolt (pedal bracket) to the specified torque.

   Torque: 17 N·m (13 lb ft)
5. Tighten the universal joint to the specified torque.

   Torque: 25 N·m (18 lb ft)
6. Install lock cylinder assembly.
7. Install shift lock cable (For A/T).
8. Install cushion rubber.
9. Install snap ring.
10. Install Combination switch and SRS coil assembly. After installation of combination switch assembly, connect the combination switch wiring harness connector and the SRS 2-way connector located under the steering column.
11. Turn the SRS coil counterclockwise to full, return about 3 turns and align the neutral mark.

CAUTION: When turning the SRS coil counterclockwise to full, stop turning if resistance is felt. Forced further turning may damage to the cable in the SRS coil.

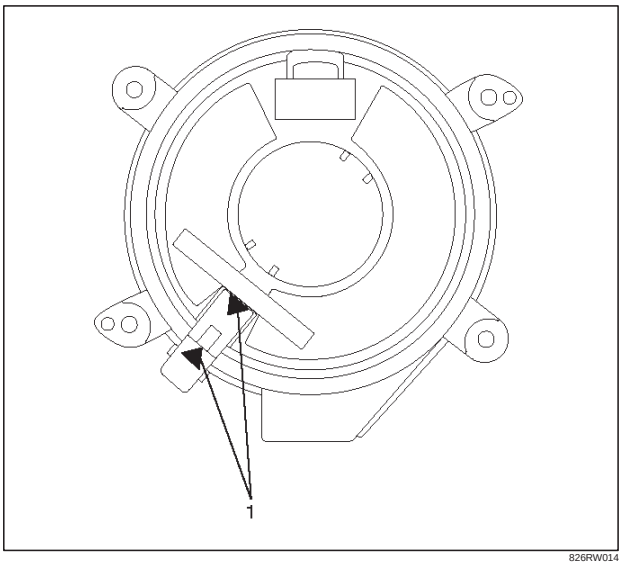

826RW014

12. When installing the steering column cover, be sure to route each wire harness as illustrated so that the harnesses do not catch any moving parts.

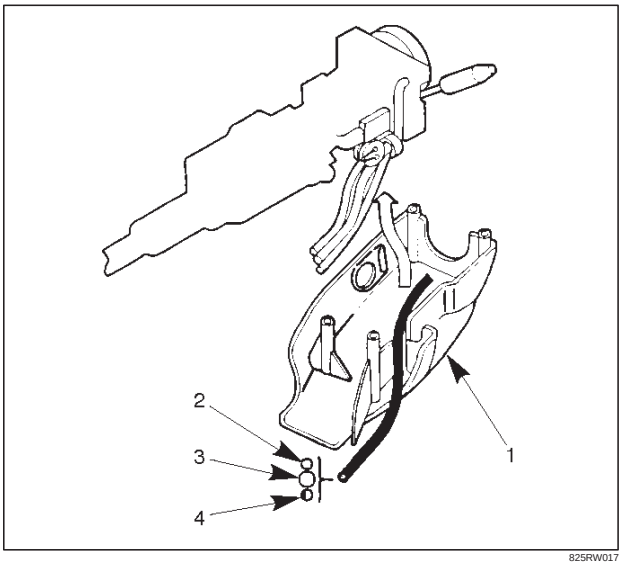

825RW017

Legend

(1) Steering Column Cover
(2) Starter Switch Harness
(3) Combination Switch Harness
(4) Inflator Module Harness

13. Install steering wheel and align the setting marks made when removing.

CAUTION: Never apply force to the steering wheel in direction of the shaft by using a hammer or other impact tools in an attempt to remove the steering wheel. The steering shaft is designed as an energy absorbing unit.

14. Tighten the steering wheel fixing nut to the specified torque.

    Torque: 34 N·m (25 lb ft)
15. Support the module and carefully connect the module connector then install inflator module.

Downloaded from www.Manualslib.com manuals search engine

CAUTION:

- **Never use the air bag assembly from another vehicle. Use only the air bag assembly for "UX".**
- **The driver's air bag assembly (Inflator module) for 1999 model has different characteristic to the parts for 1998 model.**
  When replace the driver's air bag assembly, confirm the parts number and use only the parts for 1999 model. (The driver's air bag assembly for 1999 model has "yellow" bar codes label. 1998 model has "white" bar codes label.)

NOTE: Pass the lead wire through the tabs on the plastic cover (wire protector) of inflator to prevent lead wire from being pinched.

16. Secure the module with one bolt to relieve weight on the wire connector.
17. Tighten bolts to specified sequence as illustrated.

    Torque: 8 N·m (69 lb in)

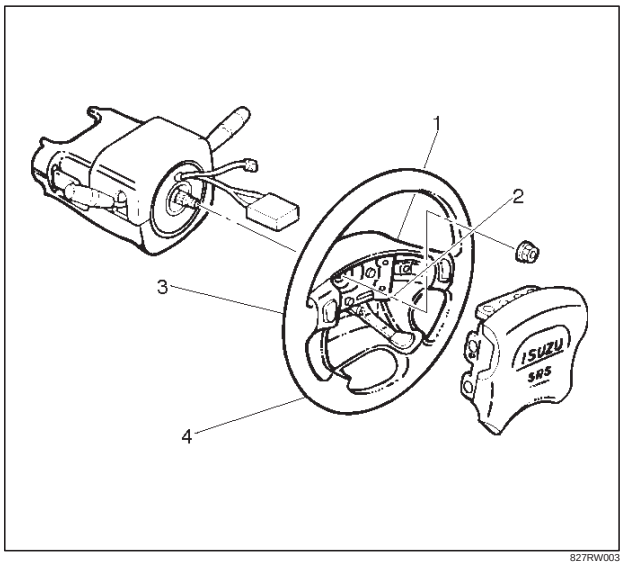

827RW003

18. Install driver knee bolster (reinforcement).
19. Install steering lower cover.
20. Install the engine hood opening lever.
21. Install lower cluster assembly.
22. Connect the wiring harness connectors then install front console assembly.
23. Install the transmission (for M/T) and transfer control lever knob.
24. Connect the yellow 2-way SRS connector located under the steering column.
25. Connect the battery "–" terminal cable.

System Inspection

Turn the ignition switch "ON" while watching warning light. The light should flash 7 times and then go off. If lamp does not operate correctly, refer to Restraints section.

Downloaded from www.Manualslib.com manuals search engine

Supplemental Restraint System Steering Wheel & Column and Associated Parts

Main Data and Specifications

Torque Specifications

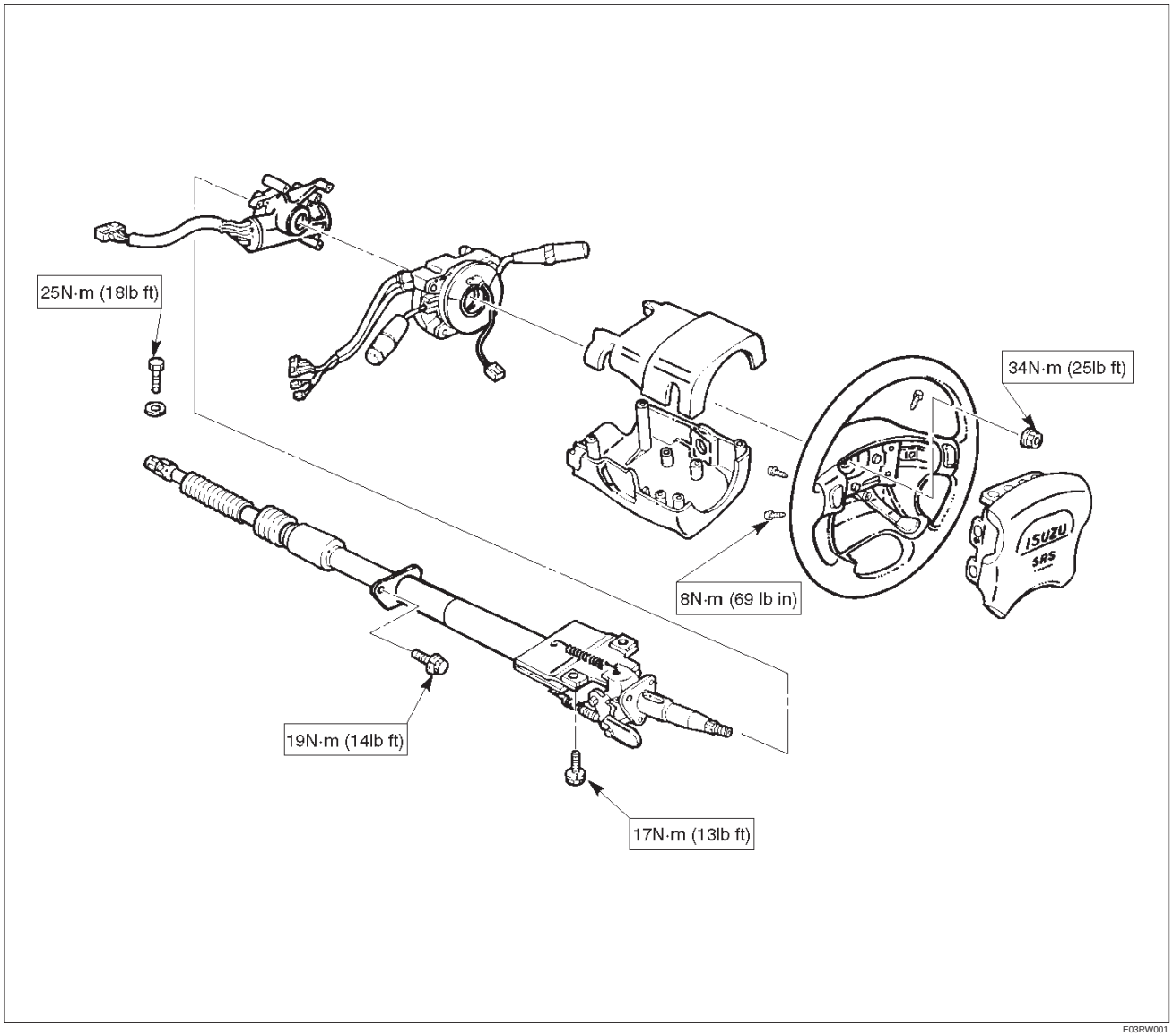

E03RW001

Downloaded from www.Manualslib.com manuals search engine

Special Tools

ILLUSTRATION	**TOOL NO.** TOOL NAME
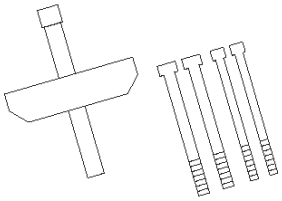	**J–29752** Steering wheel remover

Downloaded from www.Manualslib.com manuals search engine

TROOPER

SUSPENSION

CONTENTS

Front Suspension 3C
Rear Suspension 3D
Wheel and Tire System 3E

FRONT SUSPENSION

CONTENTS

Service Precaution 3C–1
General Description 3C–2
General Diagnosis 3C–3
Shock Absorber 3C–6
Shock Absorber and Associated Parts 3C–6
Removal 3C–6
Inspection and Repair 3C–6
Installation 3C–6
Stabilizer Bar 3C–7
Stabilizer Bar and Associated Parts 3C–7
Removal 3C–7
Inspection and Repair 3C–7
Installation 3C–7
Torsion Bar 3C–8
Torsion Bar and Associated Parts 3C–8
Removal 3C–8
Inspection and Repair 3C–9
Installation 3C–9
Knuckle 3C–11
Knuckle and Associated Parts 3C–11
Removal 3C–11
Inspection and Repair 3C–12
Installation 3C–12
Upper Control Arm 3C–14
Upper Control Arm and Associated Parts . 3C–14
Removal 3C–14
Inspection and Repair 3C–15
Installation 3C–16
Lower Control Arm 3C–18
Lower Control Arm and Associated Parts . 3C–18
Removal 3C–18
Inspection and Repair 3C–20
Installation 3C–20
Upper Ball Joint 3C–22
Upper Ball Joint and Associated Parts 3C–22
Removal 3C–22
Inspection and Repair 3C–23
Installation 3C–23
Lower Ball Joint 3C–24
Lower Ball Joint and Associated Parts 3C–24
Removal 3C–24
Inspection and Repair 3C–25
Installation 3C–25
Main Data and Specifications 3C–26
Special Tools 3C–27

Service Precaution

WARNING: THIS VEHICLE HAS A SUPPLEMENTAL RESTRAINT SYSTEM (SRS). REFER TO THE SRS COMPONENT AND WIRING LOCATION VIEW IN ORDER TO DETERMINE WHETHER YOU ARE PERFORMING SERVICE ON OR NEAR THE SRS COMPONENTS OR THE SRS WIRING. WHEN YOU ARE PERFORMING SERVICE ON OR NEAR THE SRS COMPONENTS OR THE SRS WIRING, REFER TO THE SRS SERVICE INFORMATION. FAILURE TO FOLLOW WARNING COULD RESULT IN POSSIBLE AIR BAG DEPLOYMENT, PERSONAL INJURY, OR OTHERWISE UNNEEDED SRS SYSTEM REPAIRS.

CAUTION: Always use the correct fastener in the proper location. When you replace a fastener, use ONLY the exact part number for that application. ISUZU will call out those fasteners that require a replacement after removal. ISUZU will also call out the fasteners that require thread lockers or thread sealant. UNLESS OTHERWISE SPECIFIED, do not use supplemental coatings (Paints, greases, or other corrosion inhibitors) on threaded fasteners or fastener joint interfaces. Generally, such coatings adversely affect the fastener torque and the joint clamping force, and may damage the fastener. When you install fasteners, use the correct tightening sequence and specifications. Following these instructions can help you avoid damage to parts and systems.

Downloaded from www.Manualslib.com manuals search engine

General Description

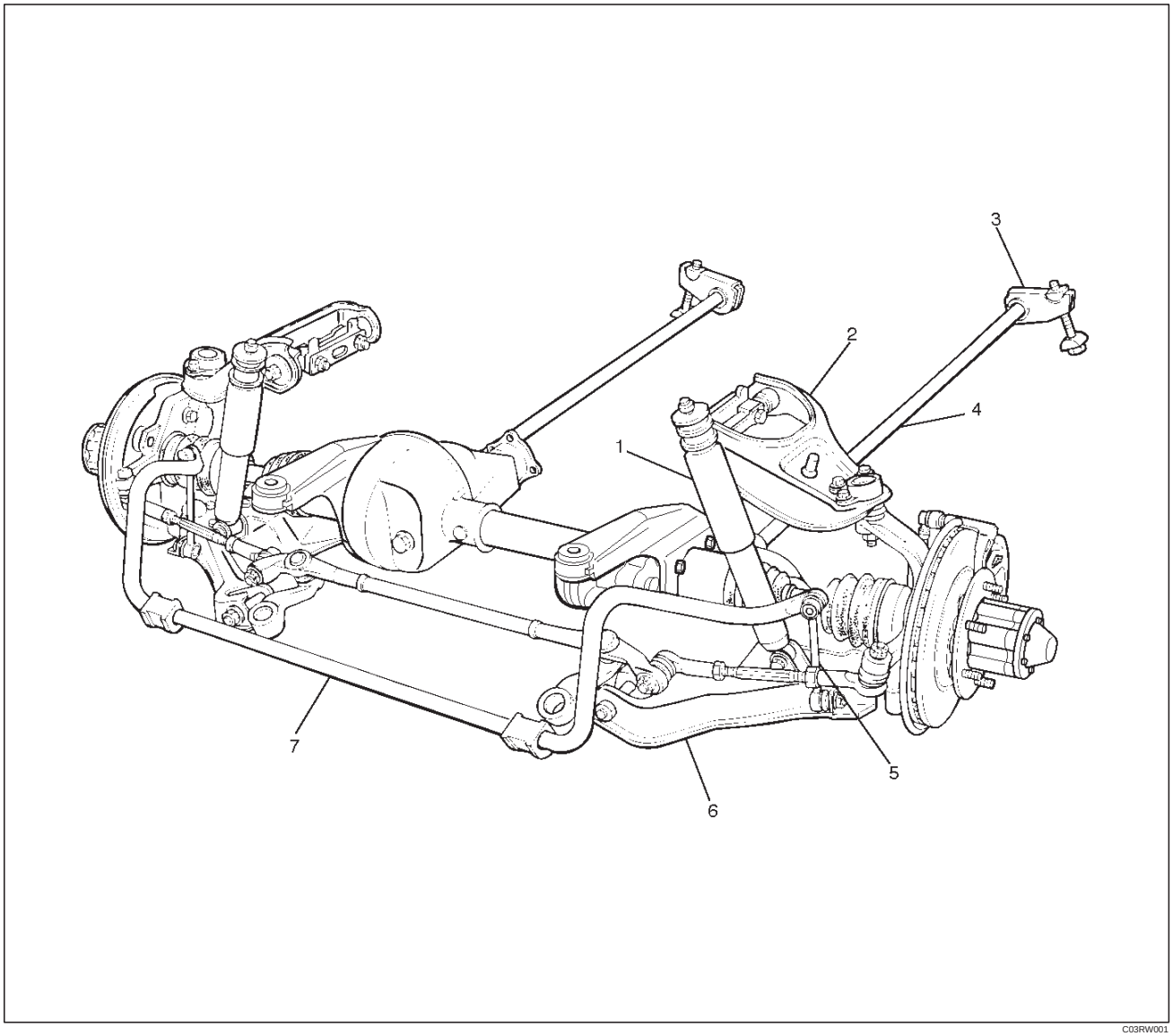

C03RW001

Legend

(1) Shock Absorber
(2) Upper Control Arm
(3) Height Control Arm
(4) Torsion Bar
(5) Link
(6) Lower Control Arm
(7) Stabilizer Bar

The front suspension is designed to allow each wheel to compensate for changes in the road surface level without greatly affecting the opposite wheel. Each wheel is independently connected to the frame by a steering knuckle, ball joint assemblies, and upper and lower control arms. The front wheels are held in proper relationship to each other by two outer track rods which are connected to steering arms on the knuckles, and to a center track rod.

All models have a front suspension system consisting of control arms, stabilizer bar, shock absorber and a torsion bar. The front end of the torsion bar is attached to the lower control arm. The rear of the torsion bar is mounted into a height control arm at the crossmember. Vehicle trim height is controlled by adjusting this arm.

Shock absorbers are mounted between the brackets on the frame and the lower control arms. The lower portion of each shock absorber is attached to the lower control arm. The upper portion of each shock absorber extends through a frame bracket and is secured with two rubber bushings, three retainers and a nut.

Ball joint assemblies are bolted to the outer end of the upper and lower control arm and are attached to the steering knuckle.

The inner ends of the upper control arm have pressed in bushings. Bolts, passing through the bushing, attach the control arm to the frame. The inner ends of the lower

Downloaded from www.Manualslib.com manuals search engine

control arm are attached to the frame by bolts passing through the bushings, which are pressed in the frame. Side roll of the front suspension is controlled by a spring steel stabilizer bar. It is mounted in rubber bushings, which are held to the crossmember by brackets. The ends of the stabilizer bar are connected to the lower control arms by links.

General Diagnosis

Condition	Possible cause	Correction
Vehicle Pulls	Mismatched or uneven tires.	Replace tire.
	Tires not adequately inflated.	Adjust tire pressure.
	Broken or sagging springs.	Replace spring.
	Radial tire lateral force.	Replace tire.
	Improper wheel alignment.	Adjust wheel alignment.
	Brake dragging in one wheel.	Repair brake.
	Loose, bent or broken front or rear suspension parts.	Tighten or replace the appropriate suspension part(s).
	Faulty shock absorbers.	Replace shock absorber.
Abnormal or Excessive Tire Wear	Sagging or broken spring.	Replace spring.
	Tire out of balance.	Balance or replace tire.
	Improper wheel alignment.	Check front end alignment.
	Faulty shock absorber.	Replace shock absorber.
	Hard driving.	Replace tire.
	Overloaded vehicle.	Replace tire and reduce load.
	Tires not rotated periodically.	Replace or rotate tire.
	Worn or loose road wheel bearings.	Replace wheel bearing.
	Wobbly wheel or tires.	Replace wheel or tire.
	Tires not adequately inflated.	Adjust the pressure.
Wheel Hop	Blister or bump on tire.	Replace tire.
	Improper shock absorber operation.	Replace shock absorber.
Shimmy, Shake or Vibration	Tire or wheel out of balance.	Balance wheels or replace tire/or wheel.
	Loose wheel bearings.	Replace wheel bearing.
	Worn steering linkage ball joints.	Replace ball joints.
	Worn upper or lower ball joints.	Replace ball joints.
	Excessive wheel runout.	Repair or replace wheel and/or tire.
	Blister or bump on tire.	Replace tire.
	Excessive loaded radial runout of tire/wheel assembly.	Replace tire or wheel.
	Improper wheel alignment.	Check wheel alignment.
	Loose or worn steering linkage.	Tighten or replace steering linkage.
	Loose steering gear.	Tighten housing bolts.
	Tires not adequately inflated.	Adjust tire pressure.
	Loose, bent or broken front or rear suspension parts.	Tighten or replace the appropriate suspension parts.
	Faulty shock absorber.	Replace shock absorber.
	Hub bearing preload misadjustment.	Adjust preload.

Downloaded from www.Manualslib.com manuals search engine

Condition	Possible cause	Correction
Hard Steering	Bind in steering linkage ball studs, upper or lower ball joint.	Replace ball joint.
	Improper wheel alignment.	Check wheel alignment.
	Steering gear misadjustment.	Check and adjust pinion torque.
	Tire not adequately inflated.	Inflate tires to proper pressure.
	Bind in steering column or shaft.	Repair or replace.
	Improper power steering system operation.	Repair or replace. Refer to Steering section.
Too Much Play In Steering	Wheel bearings worn.	Replace wheel bearings.
	Loose steering gear or linkage.	Retighten or repair.
	Steering gear misadjustment.	Inspect and adjust steering gear preload.
	Worn or loose steering shaft universal joint.	Retighten or replace steering shaft.
	Worn steering linkage ball joints.	Replace ball joints.
	Worn upper or lower ball joints.	Replace ball joints.
Poor Steering Wheel Returnability	Bind in steering linkage ball joints.	Replace ball joints.
	Bind in upper or lower ball joints.	Replace ball joints.
	Bind in steering column and shaft.	Repair or replace.
	Bind in steering gear.	Check and repair steering gear.
	Improper wheel alignment.	Adjust wheel alignment.
	Tires not adequately inflated.	Adjust tire pressure.
	Loose steering wheel nut.	Retighten.
	Worn wheel bearing.	Replace.
Abnormal Noise	Worn, sticky or loose upper or lower ball joint, steering linkage ball joints or drive axle joints.	Replace.
	Faulty shock absorbers.	Replace.
	Worn upper or lower control arm bushing.	Replace.
	Loose stabilizer bar.	Retighten bolts or replace bushings.
	Loose wheel nuts.	Tighten nuts. Check for elongated wheel nut holes. Replace wheel if required.
	Loose suspension bolts or nuts.	Retighten suspension bolts or nuts.
	Broken or otherwise damaged wheel bearings.	Replace wheel bearing.
	Broken suspension springs.	Replace spring.
	Loose steering gear.	Retighten mounting bolt.
	Faulty steering gear.	Check and adjust steering gear.

Downloaded from www.Manualslib.com manuals search engine

Condition	Possible cause	Correction
Wandering or Poor Steering Stability	Mismatched or unevenly worn tires.	Replace tire or inflate tires to proper pressure.
	Loose steering linkage ball joints.	Replace ball joints.
	Faulty shock absorbers.	Replace shock absorber.
	Loose stabilizer bar.	Tighten or replace stabilizer bar or bushings.
	Broken or sagging springs.	Replace spring (pairs).
	Steering gear misadjustment.	Check or adjust steering gear.
	Improper wheel alignment.	Adjust wheel alignment.
Erratic Steering When Braking	Worn wheel bearings.	Replace wheel bearings.
	Broken or sagging springs.	Replace spring (pairs).
	Leaking caliper.	Repair or replace caliper.
	Warped discs.	Replace brake disc.
	Badly worn brake pads.	Replace brake pads.
	Tires are inflated unequally.	Inflate tires to proper pressure.
Low or Uneven Trim Height	Broken or sagging springs.	Replace springs (In pairs).
	Vehicle overloaded.	Reduce load.
	Incorrect springs.	Adjust or replace torsion bar.
Suspension Bottoms	Vehicle overloaded.	Reduce load.
	Faulty shock absorber.	Replace shock absorber.
	Incorrect, broken or sagging springs.	Replace springs.
Body Leans	Loose stabilizer bar.	Tighten stabilizer bar bolts or replace bushings.
	Faulty shock absorber, struts or mounting.	Replace shock absorber.
	Broken or sagging springs.	Replace springs (In pairs).
	Vehicle overloaded.	Reduce load.
Cupped Tires	Worn wheel bearings.	Replace wheel bearing.
	Excessive tire or wheel run out.	Replace tire or wheel.
	Worn ball joints.	Replace ball joints.
	Tire out of balance.	Adjust tire balance.

Downloaded from www.Manualslib.com manuals search engine

Shock Absorber

Shock Absorber and Associated Parts

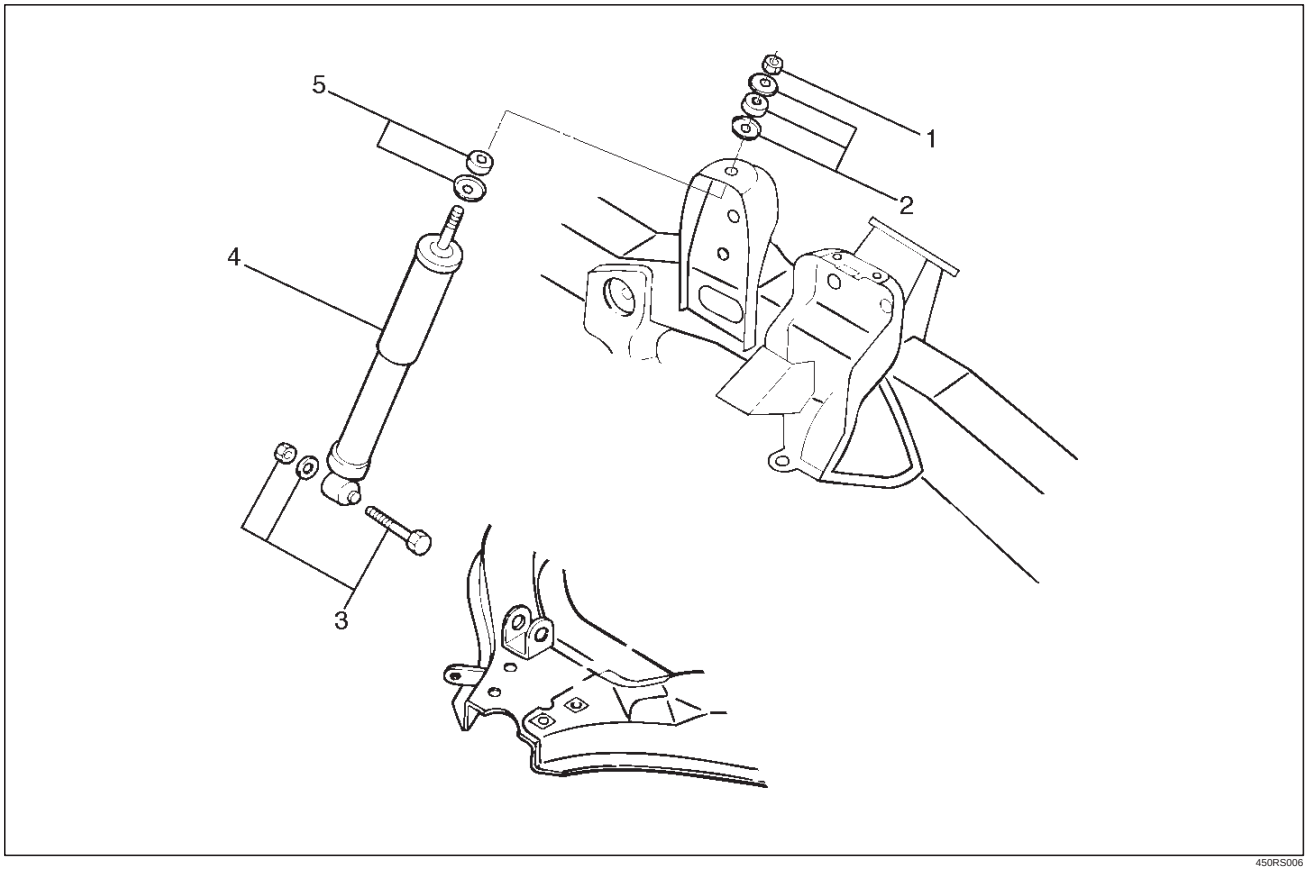

450RS006

Legend

(1) Nut
(2) Rubber Bushing and Washer
(3) Bolt, Nut and Washer
(4) Shock Absorber
(5) Rubber Bushing and Washer

Removal

1. Raise the vehicle and support it with suitable safety stands.
2. Remove wheel and tire assembly. Refer to Wheel Replacement in this section.
3. Remove bolt,nut and washer.
4. Remove nut.
5. Remove rubber bushing and washer.
6. Remove shock absorber.
7. Remove rubber bushing and washer.

Inspection and Repair

Make necessary correction or parts replacement if wear, damage, corrosion or any other abnormal conditions are found through inspection.
Check the following parts:

- Shock absorber
- Rubber bushing

Installation

1. Install rubber bushing and washer.
2. Install shock absorber.
3. Install rubber bushing and washer.
4. Install nut, then tighten it to the specified torque.

   Torque: 20 N·m (14 lb ft)

5. Install bolt, nut and washer, then tighten to the specified torque.

   Torque: 82 N·m (61 lb ft)

Downloaded from www.Manualslib.com manuals search engine

Stabilizer Bar

Stabilizer Bar and Associated Parts

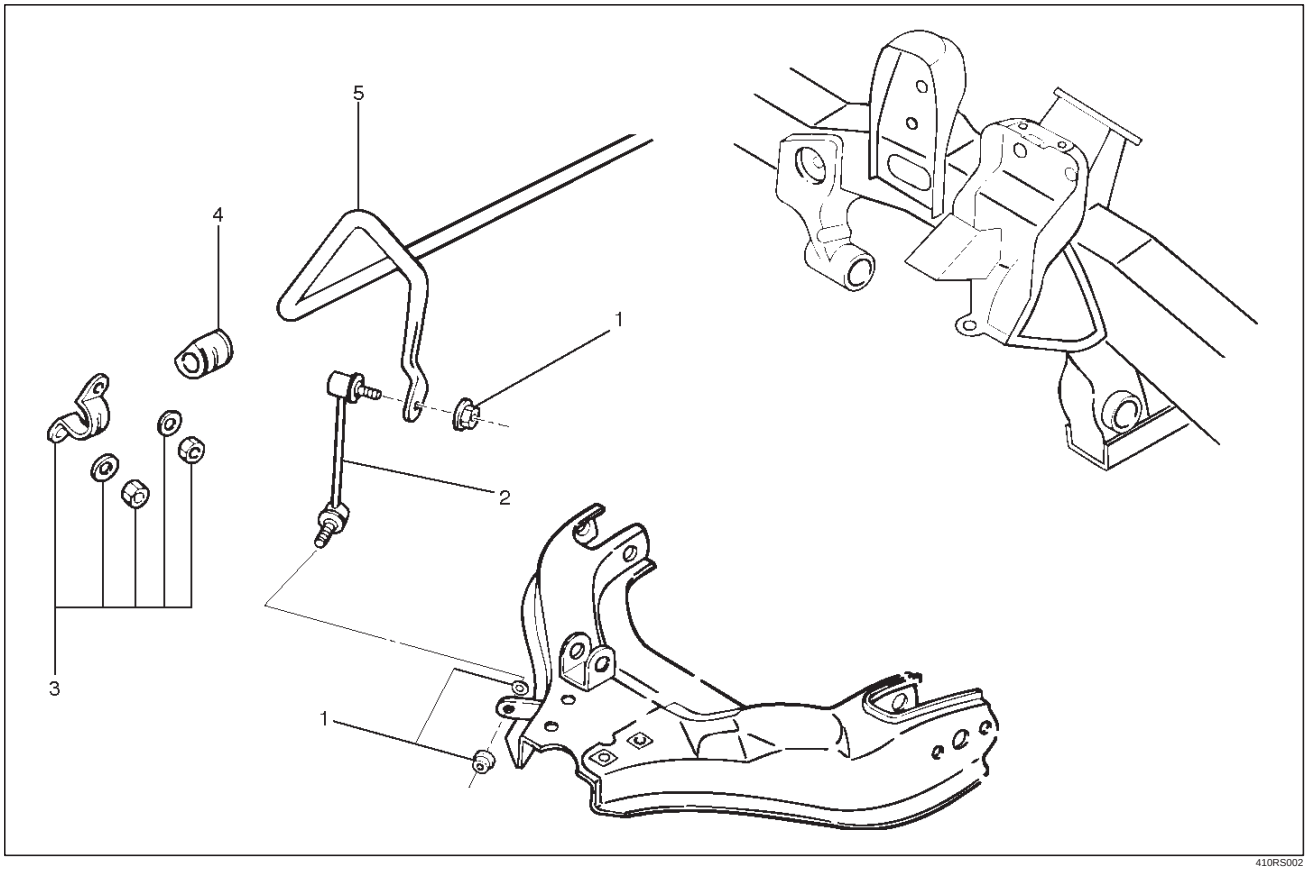

Legend

(1) Nut and Washer
(2) Link
(3) Bracket
(4) Rubber Bushing
(5) Stabilizer Bar

Removal

1. Raise the vehicle and support the frame with suitable safety stands.
2. Remove the stone guard.
3. Remove wheel and tire assembly. Refer to Wheel Replacement in this section.
4. Remove nut and washer.

CAUTION: Be careful not to break the ball joint boot.

5. Remove link.
6. Remove bracket.
7. Remove stabilizer bar.
8. Remove rubber bushing.

Inspection and Repair

Make necessary correction or parts replacement if wear, damage, corrosion or any other abnormal conditions are found through inspection.
Check the following parts:

- Stabilizer bar
- Rubber bushing
- Link ball joint

Installation

1. Install rubber bushing.
2. Install stabilizer bar.
3. Install bracket, then tighten it to the specified torque.

   Torque: 22 N·m (16 lb ft)

4. Install link.
5. Install nut and washer, then tighten the nut to the specified torque.

   Torque: 50 N·m (37 lb ft)

Downloaded from www.Manualslib.com manuals search engine

Torsion Bar

Torsion Bar and Associated Parts

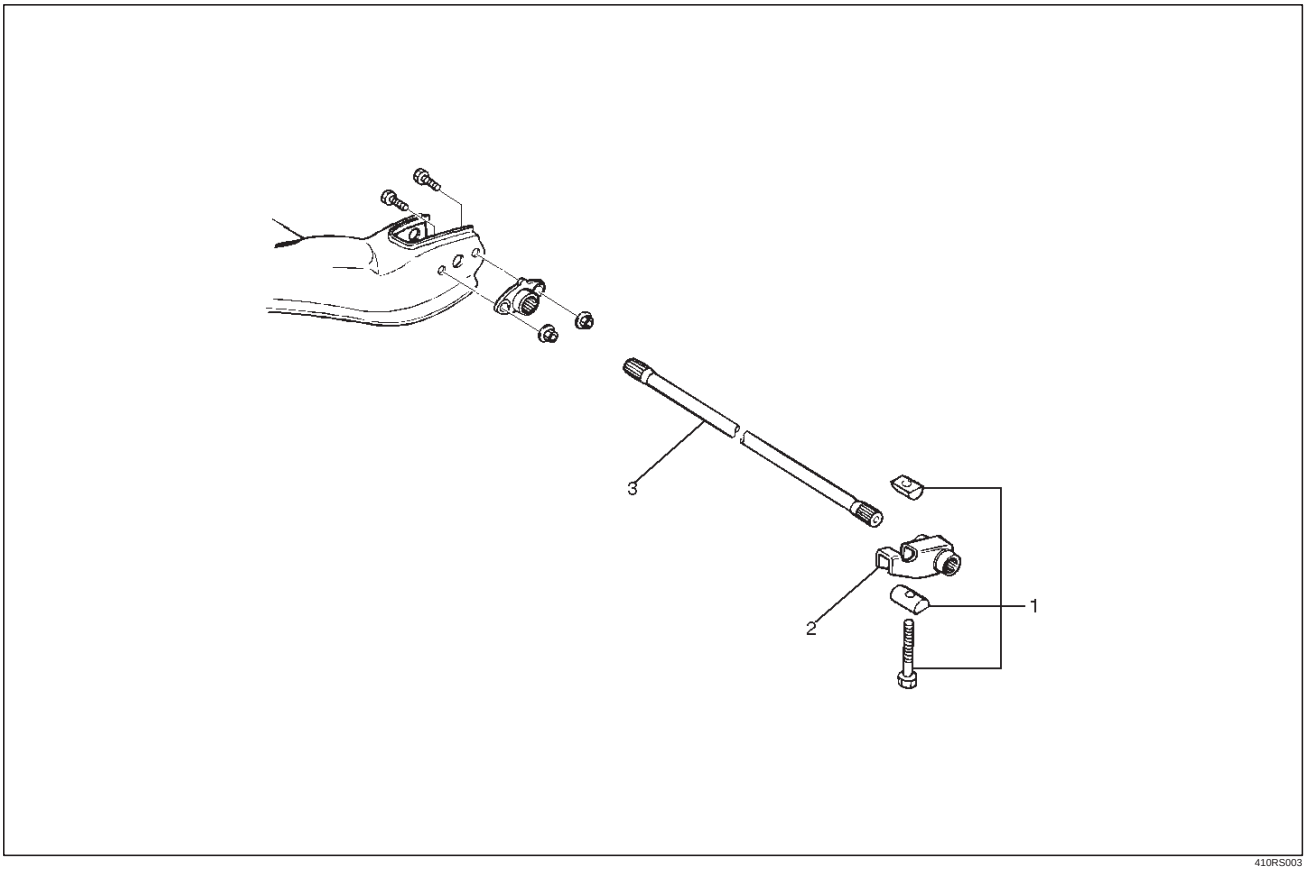

410RS003

Legend

(1) Adjust Bolt, End Piece and Seat
(2) Height Control Arm
(3) Torsion Bar

Removal

1. Raise the vehicle and support the frame with suitable safety stands.
2. Apply the setting marks(1) to the adjust bolt and end piece, then remove adjust bolt, end piece and seat.

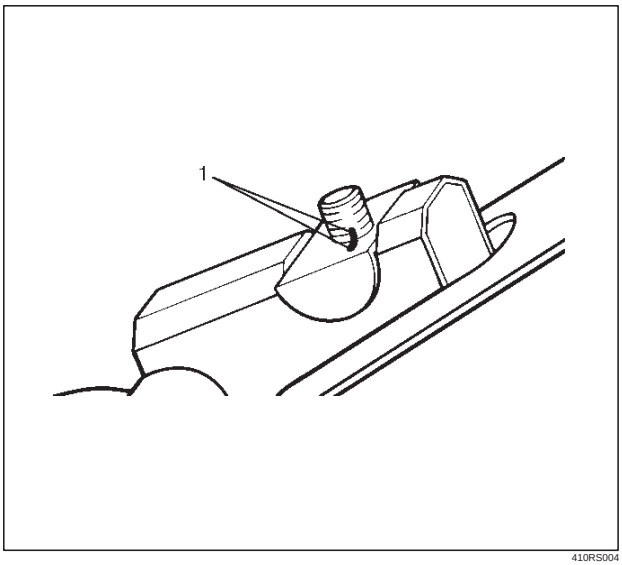

410RS004

Downloaded from www.Manualslib.com manuals search engine

3. Apply the setting marks(2) to the height control arm and torsion bar, then remove height control arm.

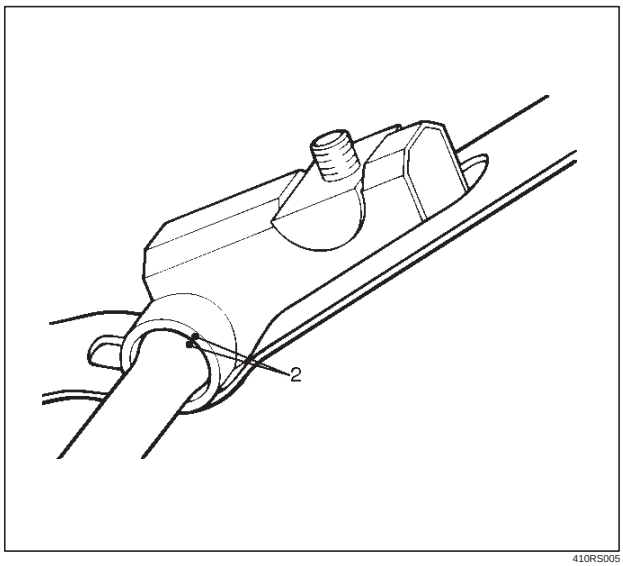

410RS005

4. Apply the setting marks(3) to the torsion bar and lower control arm, then remove torsion bar.

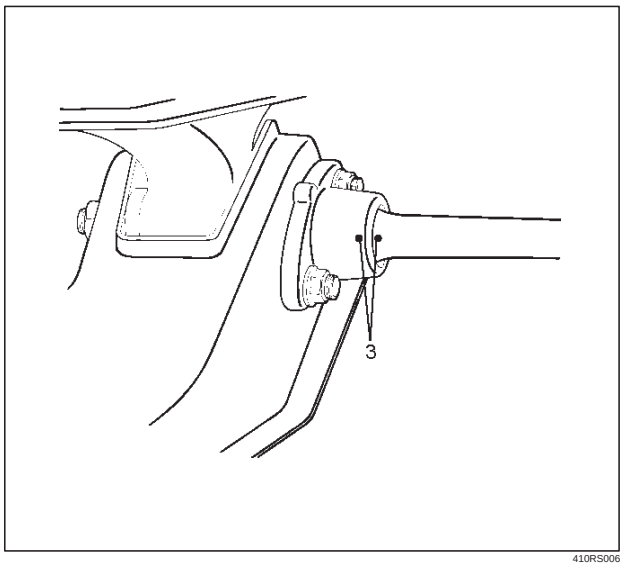

410RS006

Inspection and Repair

Make necessary correction or parts replacement if wear, damage, corrosion or any other abnormal conditions are found through inspection.
Check the following parts:

- Torsion bar
- Height control arm
- Adjust bolt
- Rubber seat

Installation

1. Apply grease to the serrated portions, then install torsion bar. Make sure the bars are on their correct respective sides and align the setting marks(3).

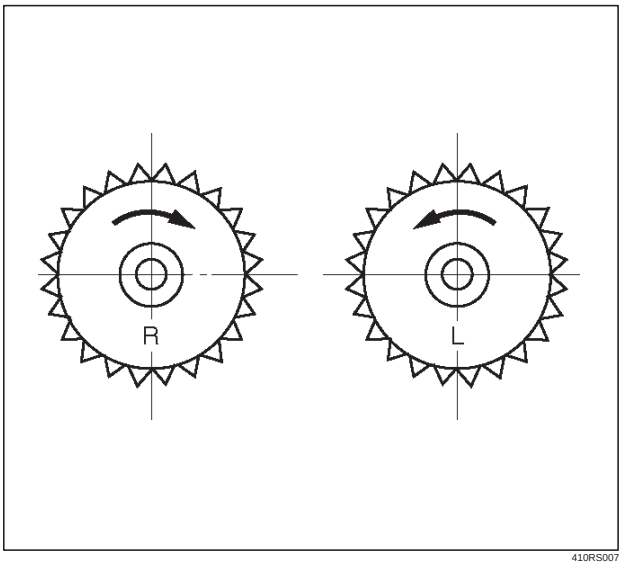

410RS007

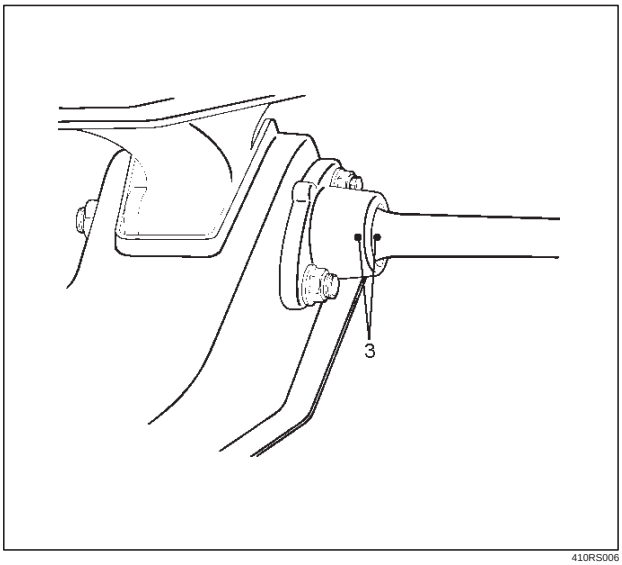

410RS006

Downloaded from www.Manualslib.com manuals search engine

2. Apply grease to the portion that fits into the bracket then install height control arm and align the setting marks(2).

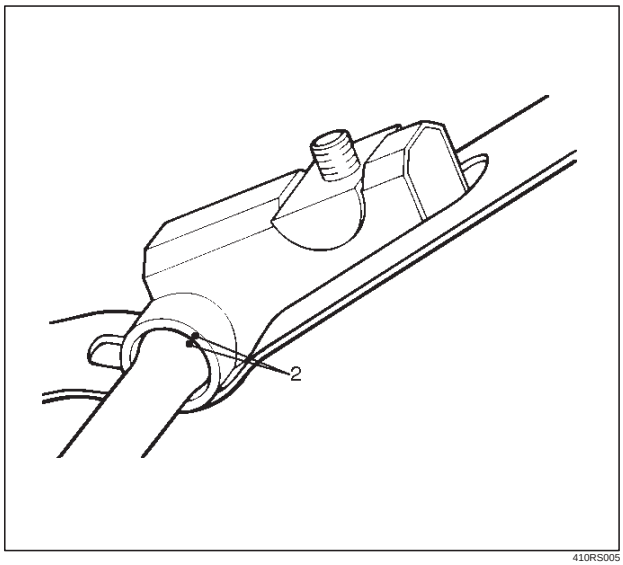

410RS005

3. Apply grease to the bolt portion of the end piece(4). Apply grease to the portion of the seat(5) that fits into the bracket.

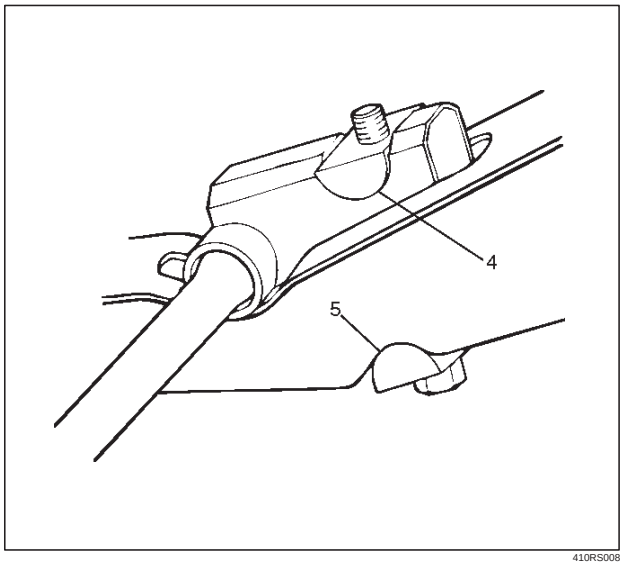

410RS008

4. Apply grease to the serrated portions.

5. Install adjust bolt and seat, then turn the adjust bolt to the setting mark(1) applied during disassembly.

NOTE: Adjust the trim height. Refer to Front End Alignment Inspection and Adjustment in Steering section.

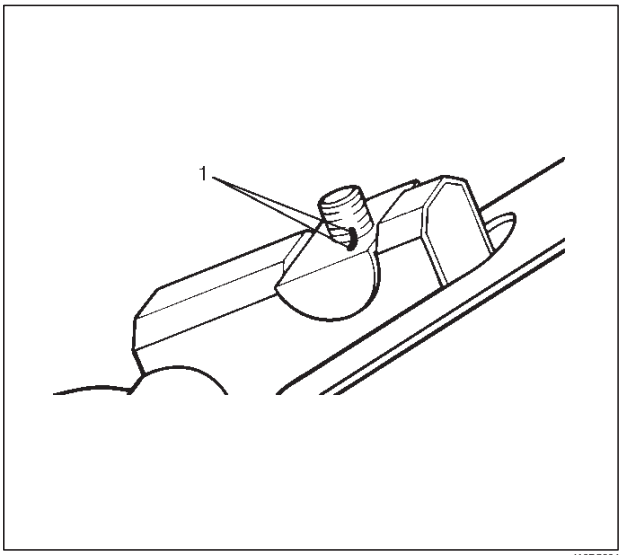

410RS004

Downloaded from www.Manualslib.com manuals search engine

Knuckle

Knuckle and Associated Parts

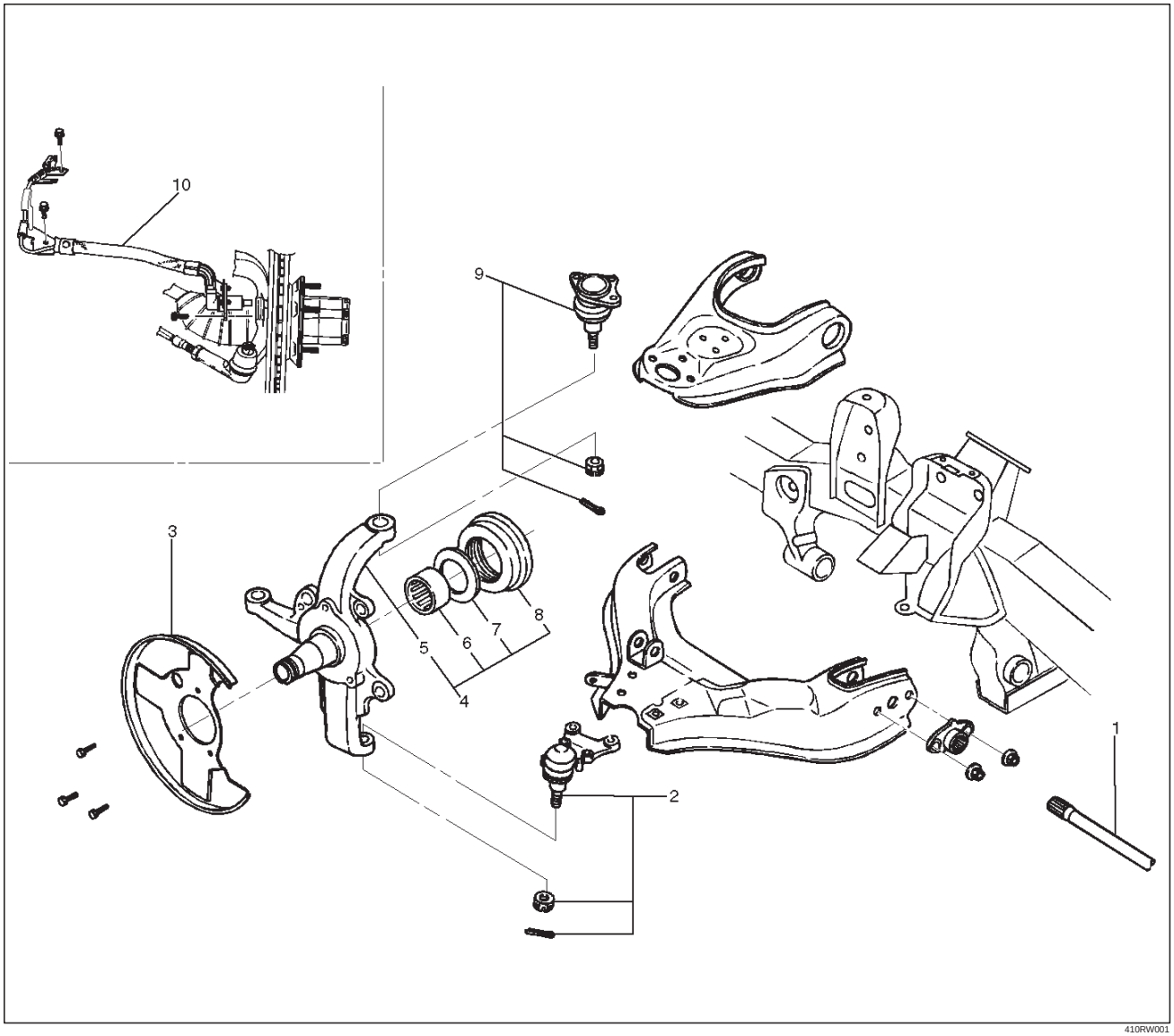

Legend

(1) Torsion Bar
(2) Lower Ball Joint
(3) Back Plate
(4) Knuckle Assembly
(5) Knuckle
(6) Needle Bearing
(7) Thrust Washer
(8) Oil Seal
(9) Upper Ball Joint
(10) Wheel Speed Sensor

Removal

1. Raise the vehicle and support the frame with suitable safety stands.
2. Remove wheel and tire assembly. Refer to Wheel Replacement in this section.
3. Remove the brake caliper. Refer to Disc Brakes in Brake section.
4. Remove the hub assembly. Refer to Front Hub and Disk in Driveline/Axle section.
5. Remove outer track rod from the knuckle. Refer to Outer Track Rod Assembly Replacement in Steering section.
6. Remove the speed sensor from the knuckle.
7. Loosen torsion bar by height control arm adjust bolt, then remove torsion bar. Refer to Torsion Bar Replacement in this section.

Downloaded from www.Manualslib.com manuals search engine

8. Remove wheel speed sensor.
9. Remove back plate.
10. Remove lower ball joint by using remover J–29107.

CAUTION: Be careful not to damage the ball joint boot.

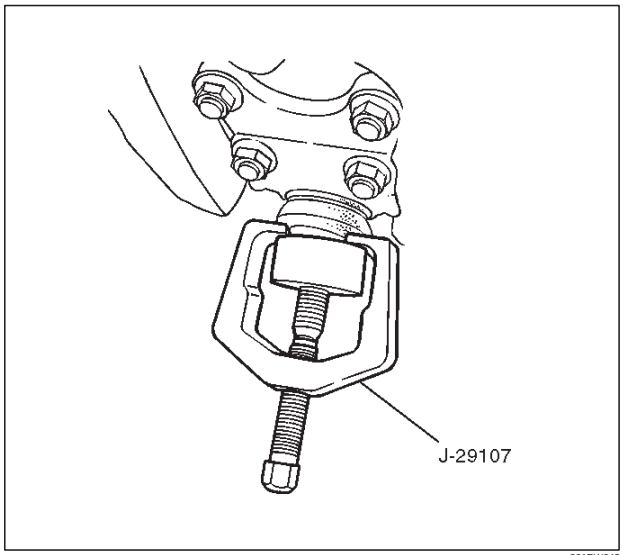

901RW042

11. Remove upper ball joint by using remover J–36831.

CAUTION: Be careful not to damage the ball joint boot.

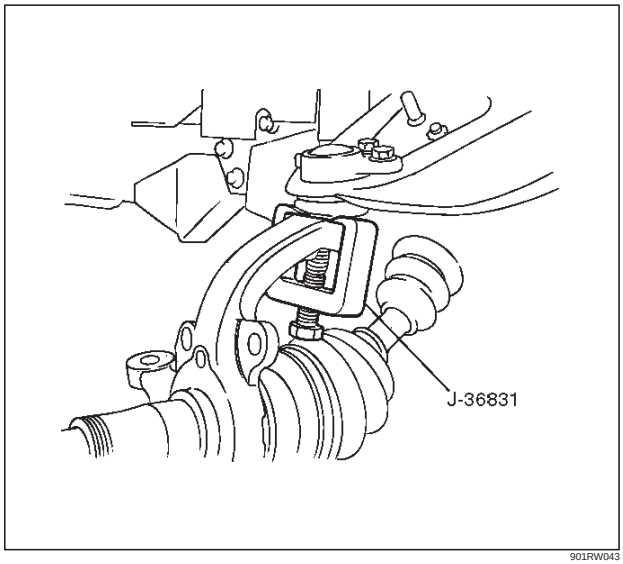

901RW043

12. Remove knuckle assembly.
13. Remove oil seal.
14. Remove washer.
15. Remove needle bearing by using remover J–23907.

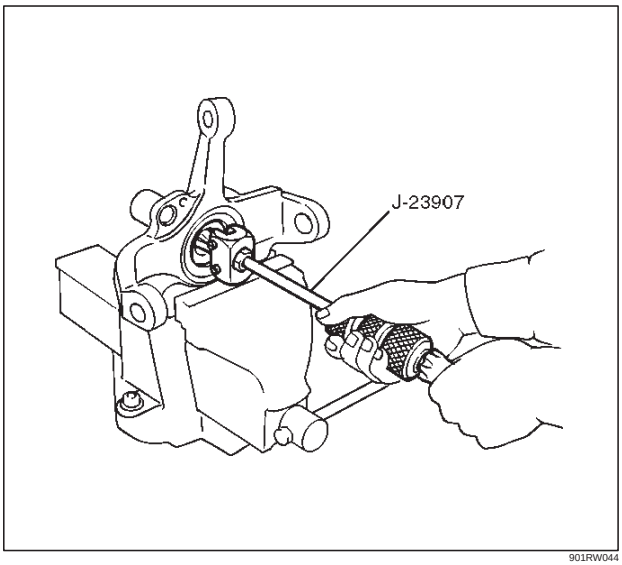

901RW044

Inspection and Repair

Make necessary correction or parts replacement if wear, damage, corrosion or any other abnormal conditions are found through inspection.
Check the following parts:

- Knuckle
- Knuckle arm
- Needle bearing
- Thrust washer

Installation

1. Apply appropriate amount of multipurpose type grease to the new bearing (Approx. 5 g)and install needle bearing by using installer J–36838 and J–8092.

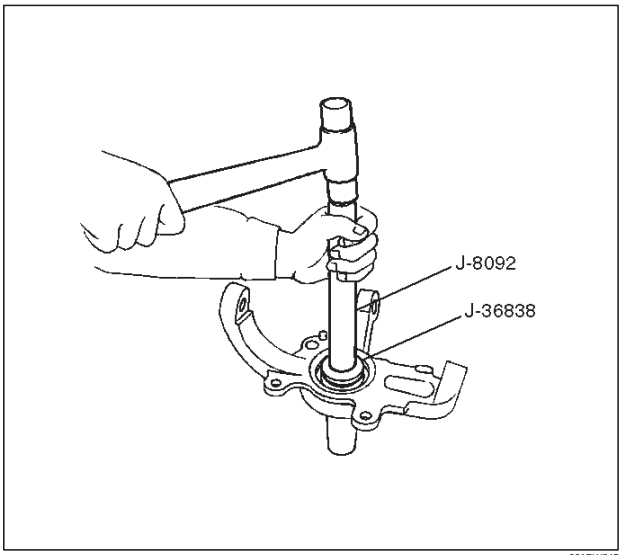

901RW045

Downloaded from www.Manualslib.com manuals search engine

2. Apply multipurpose type grease to the thrust washer, and install washer with chamfered side facing knuckle.
3. Use a new oil seal, and apply multipurpose type grease to the area surrounded by the lip (approx. 2 g). Then use installer J–41468 and J–8092 to install oil seal. After fitting the oil seal to the installer, drive it to the knuckle using a hammer or bench press until the tool front face contacts with the thrust washer.

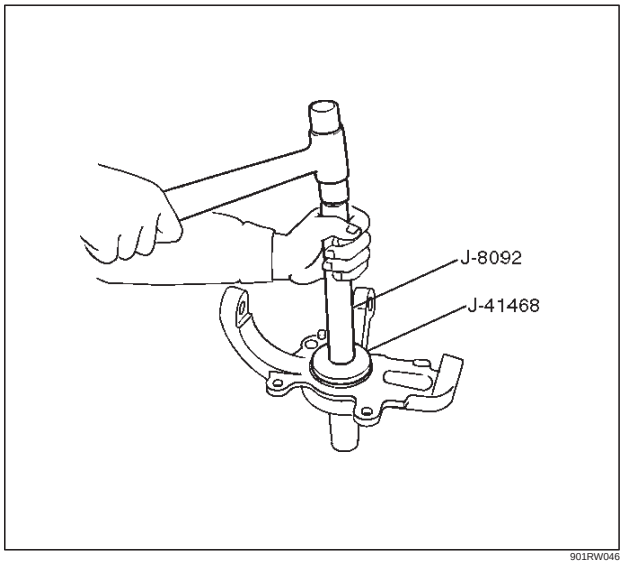

901RW046

4. Install knuckle assembly.
5. Install upper ball joint and tighten the nut to the specified torque, with just enough additional torque to align cotter pin holes. Install new cotter pin.

Torque: 98 N·m (72 lb ft)

6. Install lower ball joint and tighten the nut to the specified torque, with just enough additional torque to align cotter pin holes. Install new cotter pin.

Torque: 147 N·m (108 lb ft)

7. Install back plate.
8. Install wheel speed sensor.
9. Install torsion bar, refer to Torsion Bar Replacement in this section.

NOTE: Adjust the trim height. Refer to Front End Alignment Inspection and Adjustment in Steering section.

Downloaded from www.Manualslib.com manuals search engine

Upper Control Arm

Upper Control Arm and Associated Parts

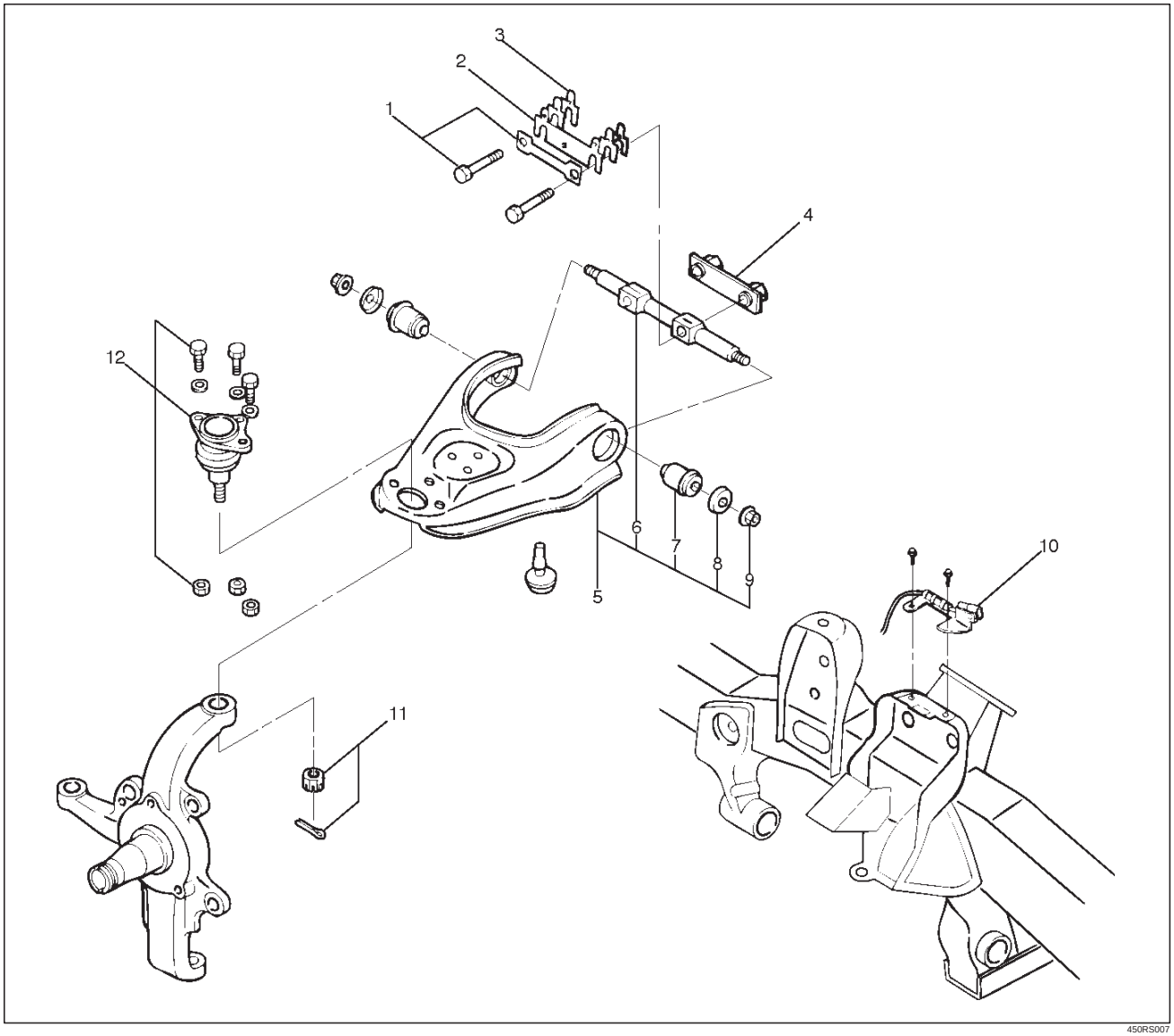

450RS007

Legend

(1) Bolt and Plate
(2) Camber Shims
(3) Caster Shims
(4) Nut Assembly
(5) Upper Control Arm Assembly
(6) Fulcrum Pin
(7) Bushing
(8) Plate
(9) Nut
(10) Speed Sensor Cable
(11) Nut and Cotter Pin
(12) Upper Ball Joint

Removal

1. Raise the vehicle and support the frame with suitable safety stands.
2. Remove wheel and tire assembly. Refer to Wheel Replacement in this section.
3. Remove the brake caliper and disconnect brake pipe. Refer to Disc Brakes in Brake section.
4. Support lower control arm with a jack.
5. Remove speed sensor cable.
6. Remove nut and cotter pin then use remover J–36831.

Downloaded from www.Manualslib.com manuals search engine

CAUTION: Be careful not to break the ball joint boot.

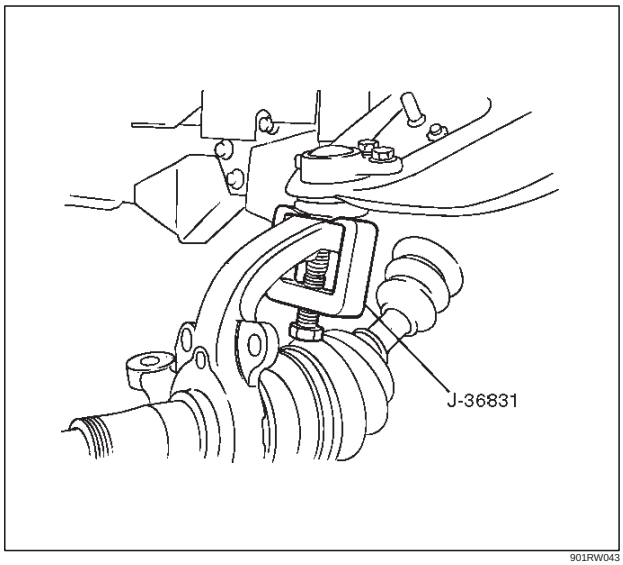

901RW043

7. Remove upper ball joint.
8. Remove bolt and plate.
9. Remove nut assembly.
10. Remove camber shims and note the positions and number of shims.
11. Remove caster shims and note the positions and number of shims.
12. Remove upper control arm assembly.
13. Remove nut.
14. Remove plate.
15. Remove bushing by using remover J–29755.

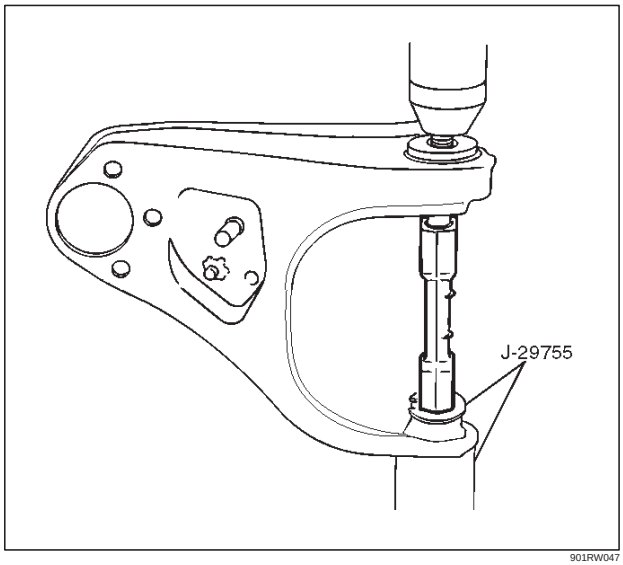

901RW047

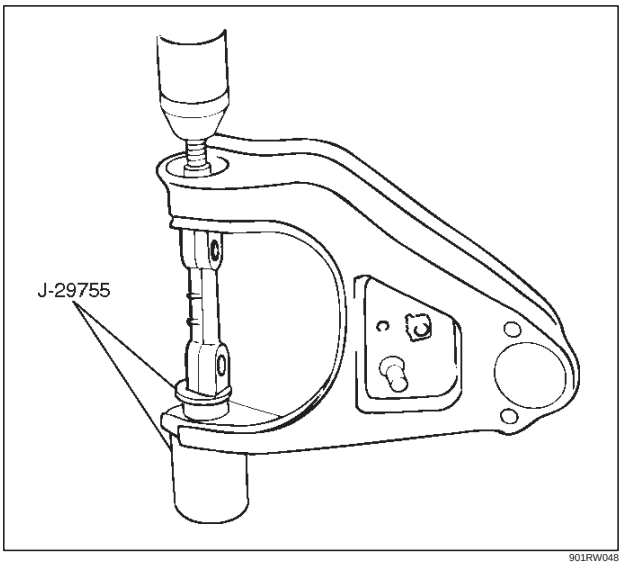

901RW048

16. Remove fulcrum pin.

Inspection and Repair

Make necessary parts replacement if wear, damage, corrosion or any other abnormal conditions are found through inspection.
Check the following parts:

- Upper control arm
- Bushing
- Fulcrum pin

Downloaded from www.Manualslib.com manuals search engine

Installation

1. Install fulcrum pin.
2. Install bushing by using installer J–29755 and J–39376.

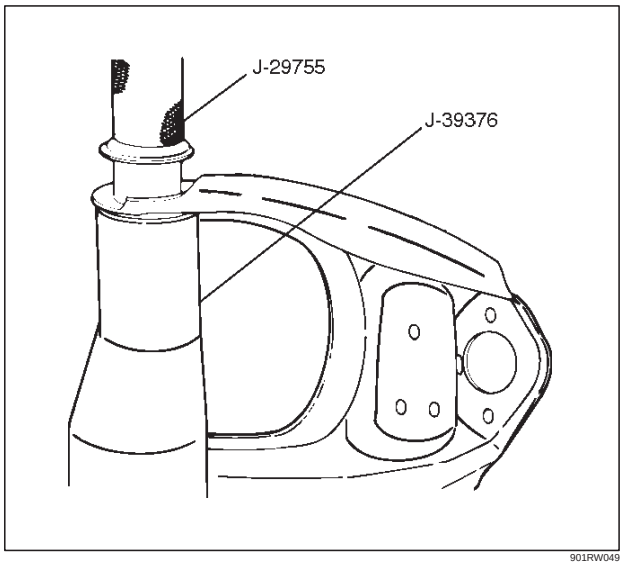

901RW049

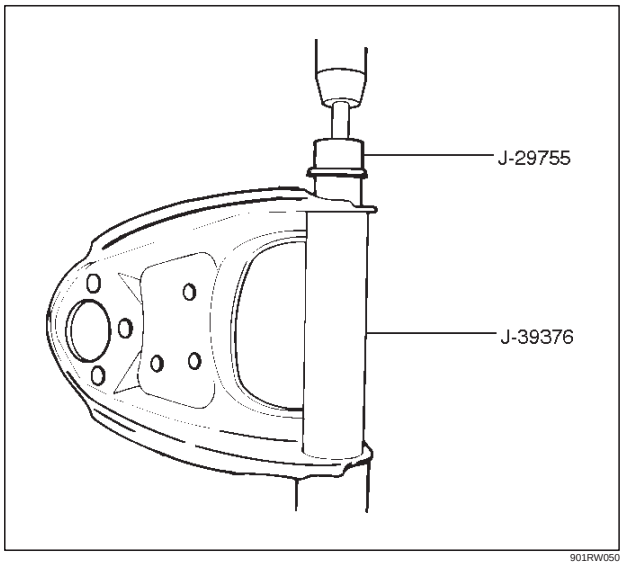

901RW050

3. Install plate.
4. Install nut and tighten fulcrum pin nut finger–tight.

NOTE: Torque fulcrum pin nut after adjusting buffer clearance.

Buffer clearance: 20 mm (0.79 in)

Torque: 108 N·m (80 lb ft)

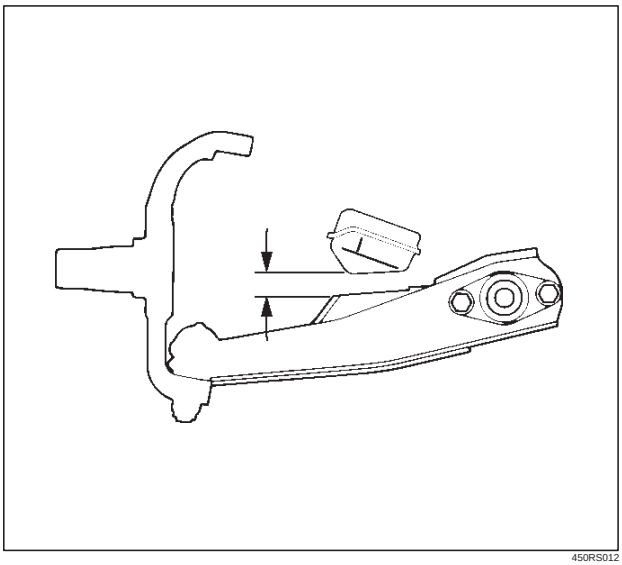

450RS012

5. Install upper control arm assembly with the fulcrum pin projections turned inward.

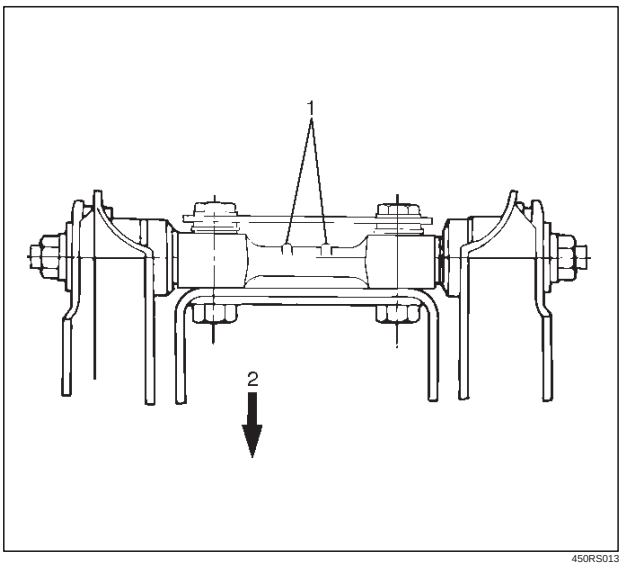

450RS013

Legend

(1) Projection
(2) Outward

6. Install the caster shims(2) between the chassis frame and fulcrum pin.

Downloaded from www.Manualslib.com manuals search engine

7. Install the camber shims(1) between the chassis frame and fulcrum pin.

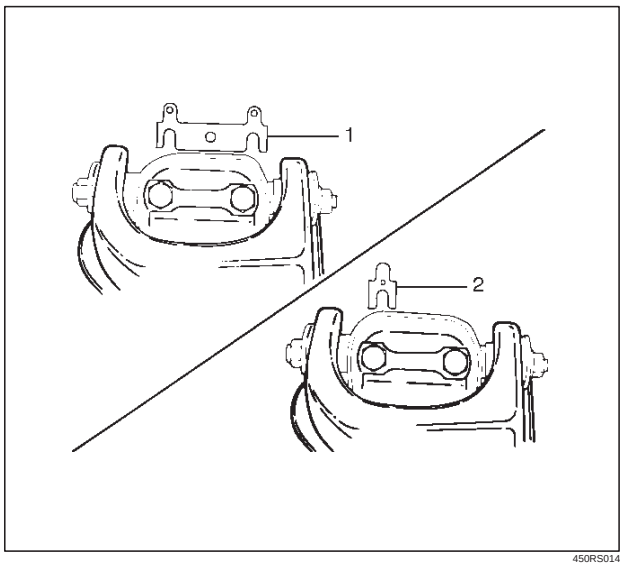

450RS014

8. Install nut assembly.
9. Install bolt and plate, then tighten the bolt to the specified torque.

   Torque: 152 N·m (112 lb ft)

10. Install upper ball joint and tighten it to the specified torque.

    Torque: 57 N·m (42 lb ft)

11. Install nut and cotter pin then tighten the nut to the specified torque, with just enough additional torque to align cotter pin holes. Install new cotter pin.

    Torque: 98 N·m (72 lb ft)

12. Install speed sensor cable.

Downloaded from www.Manualslib.com manuals search engine

Lower Control Arm

Lower Control Arm and Associated Parts

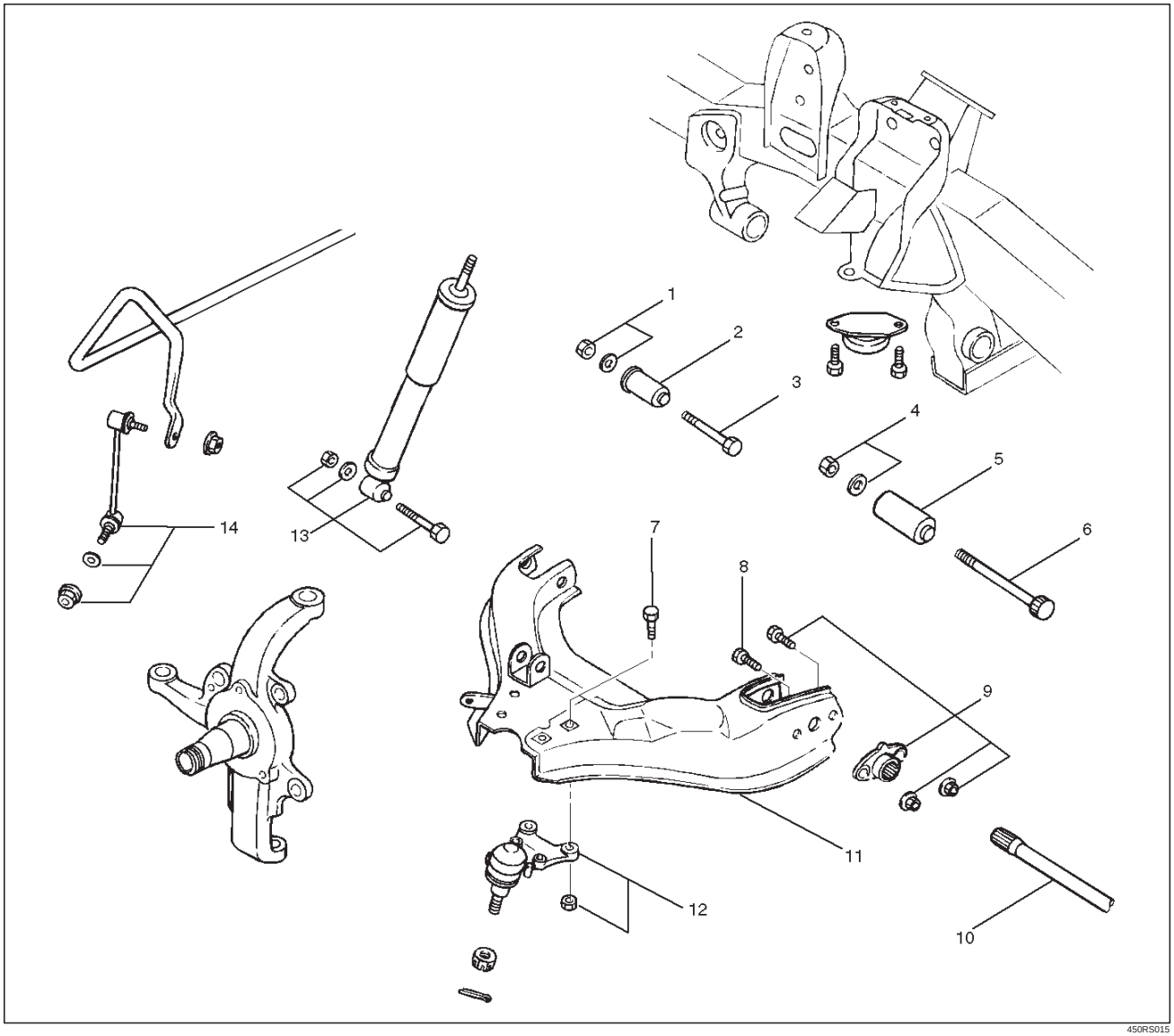

450RS015

Legend

(1) Nut and Washer, Front
(2) Bush, Front
(3) Bolt, Front
(4) Nut and Washer, Rear
(5) Bush, Rear
(6) Bolt, Rear
(7) Bolt, Lower Ball Joint
(8) Bolt, Torsion Bar Arm
(9) Torsion Bar Arm Bracket
(10) Torsion Bar
(11) Lower Control Arm
(12) Lower Ball Joint
(13) Shock Absorber
(14) Stabilizer Link

Removal

1. Raise the vehicle and support the frame with suitable safety stands.
2. Remove wheel and tire assembly. Refer to Wheel Replacement in this section.
3. Remove the outer track rod from the knuckle. Refer to Steering Linkage in Steering section.
4. Remove the retaining ring from the front axle driving shaft to release the shaft from hub. Refer to Front Hub and Disc in Driveline/Axle section.
5. Support lower control arm with a jack.
6. Remove front nut and washer.

Downloaded from www.Manualslib.com manuals search engine

7. Remove rear nut and washer.
8. Remove torsion bar, refer to Torsion Bar Replacement in this section.
9. Remove torsion bar arm bracket.
10. Disconnect the stabilizer link at the lower control arm.
11. Remove the shock absorber lower end from the lower control arm.
12. Remove the lower ball joint from the lower control arm.
13. Remove front bolt.
14. Remove rear bolt.
15. Remove lower control arm.
16. Remove torsion bar arm bolt.
17. Remove lower ball joint bolt.
18. Remove front bushing by using remover J–36833.

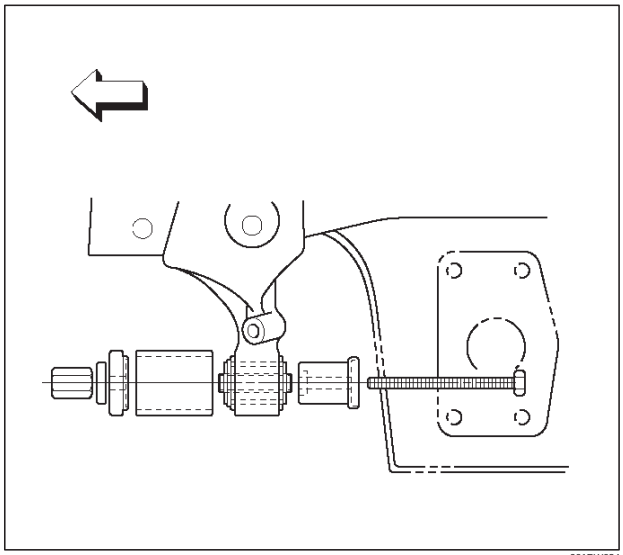

901RW034

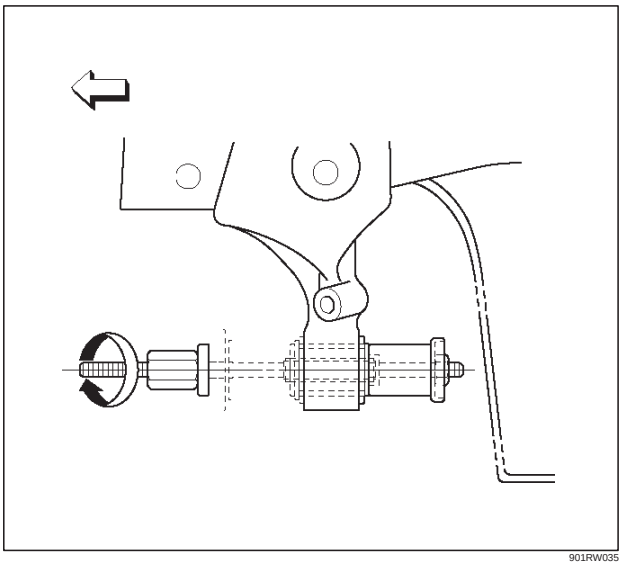

901RW035

19. Remove rear bushing by using remover J–36834.

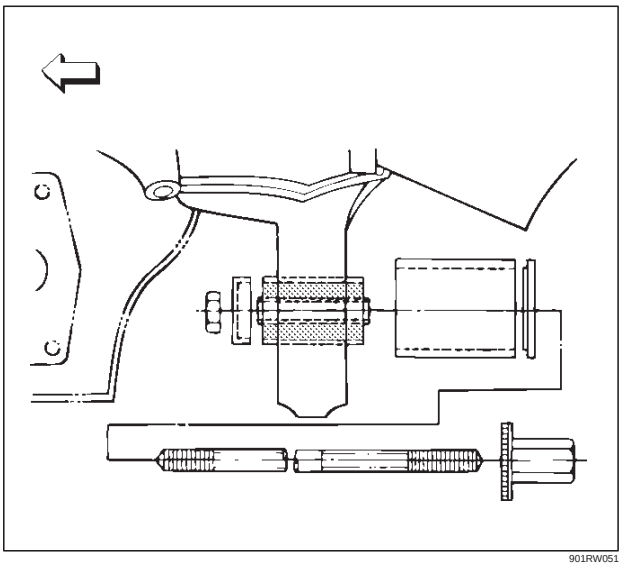

901RW051

Downloaded from www.Manualslib.com manuals search engine

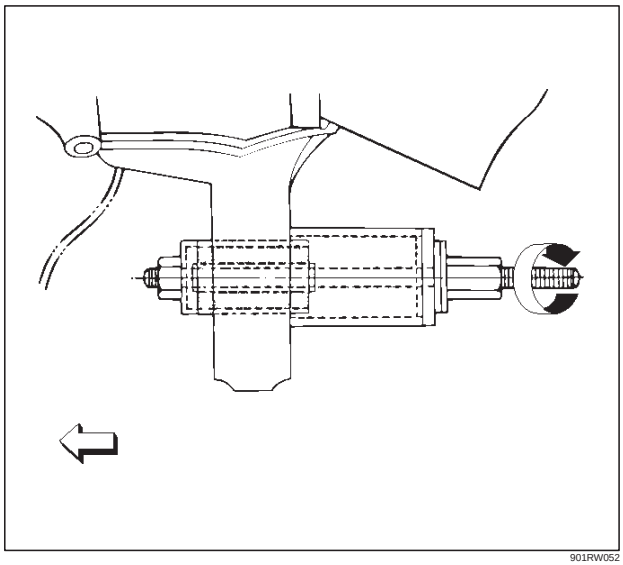

901RW052

Inspection and Repair

Make necessary correction or parts replacement if wear, damage, corrosion or any other abnormal conditions are found through inspection.
Check the following parts:

- Lower control arm
- Bushing

Installation

1. Install rear bushing by using installer J–36834.

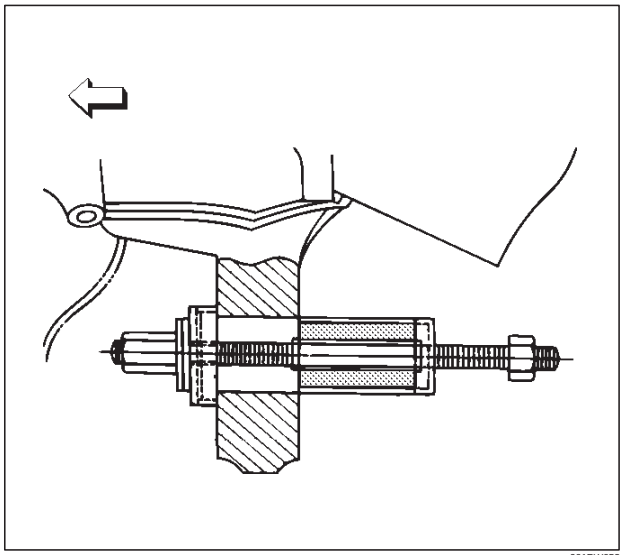

901RW053

2. Install front bushing by using installer J–36833.

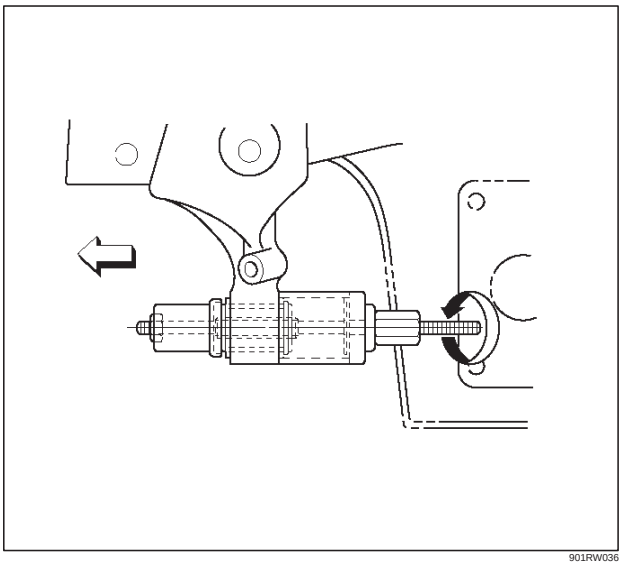

901RW036

3. Install lower ball joint bolt.
4. Install torsion bar arm bolt.
5. Install lower control arm.
6. Install rear bolt.
7. Install front bolt.
8. Install lower ball joint and tighten it to the specified torque.

   Torque: 103 N·m (76 lb ft)
9. Install shock absorber and tighten it to the specified torque.

   Torque: 82 N·m (61 lb ft)
10. Install stabilizer link and tighten it to the specified torque.

    Torque: 50 N·m (37 lb ft)
11. Install torsion bar arm bracket and tighten it to the specified torque.

    Torque: 116 N·m (85 lb ft)
12. Install Torsion bar, refer to Torsion Bar Replacement in this section.

Downloaded from www.Manualslib.com manuals search engine

13. Install rear nut and washer and tighten lower link nut finger–tight.

NOTE: Torque lower control arm nut after adjusting buffer clearance.

Buffer clearance: 20 mm (0.79 in)

Torque: 196 N·m (145 lb ft)

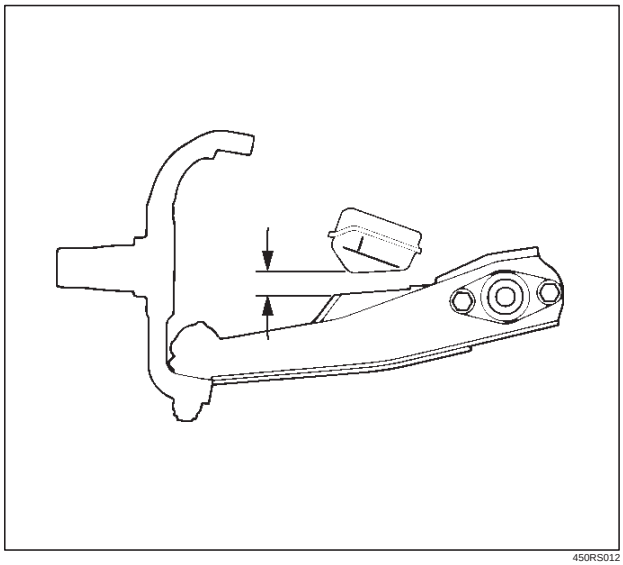

450RS012

14. Install front nut and washer then tighten lower link nut finger-tight.

NOTE: Torque lower control arm nut after adjusting buffer clearance .

Buffer clearance: 20 mm (0.79 in)

Torque: 157 N·m (116 lb ft)

NOTE: Adjust the trim height. Refer to Front End Alignment Inspection and Adjustment in Steering section.

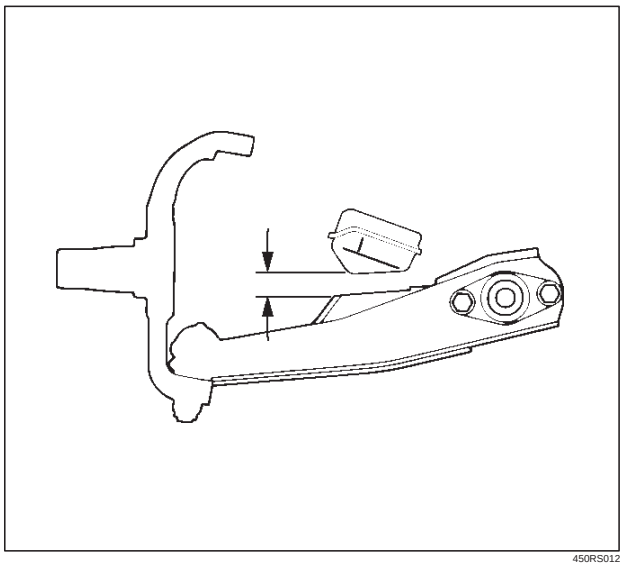

450RS012

Downloaded from www.Manualslib.com manuals search engine

Upper Ball Joint

Upper Ball Joint and Associated Parts

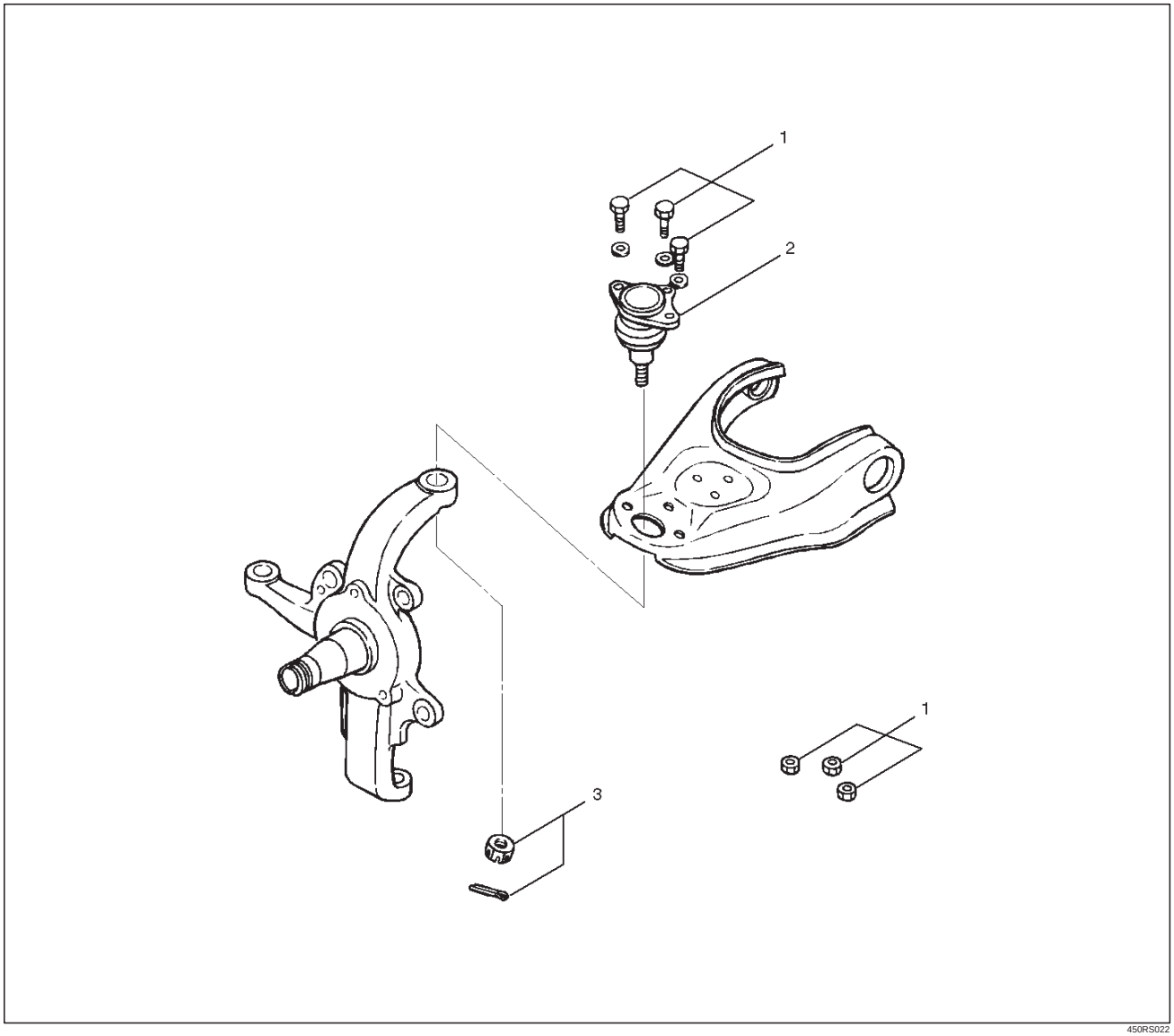

Legend

(1) Bolt, Nut and Washer
(2) Upper Ball Joint
(3) Nut and Cotter Pin

Removal

1. Raise the vehicle and support the frame with suitable safety stands.
2. Remove the speed sensor from the knuckle.

Downloaded from www.Manualslib.com manuals search engine

3. Remove upper ball joint nut and cotter pin, then use remover J–36831 to remove the upper ball joint from the knuckle.

CAUTION: Be careful not to break the ball joint boot.

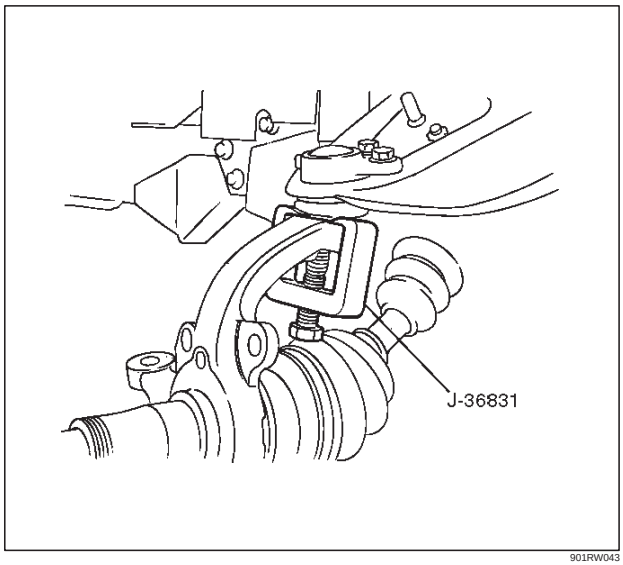

901RW043

4. Remove bolt and washer.
5. Remove upper ball joint.

Inspection and Repair

Make necessary parts replacement if wear, damage, corrosion or any other abnormal conditions are found through inspection.

- Inspect the lower end boot for damage or grease leak. Move the ball joint as shown in the figure to confirm its normal movement.
- Inspect screw/taper area of ball for damage.
- If any defects are found by the above inspections, replace the ball joint assembly with new one.

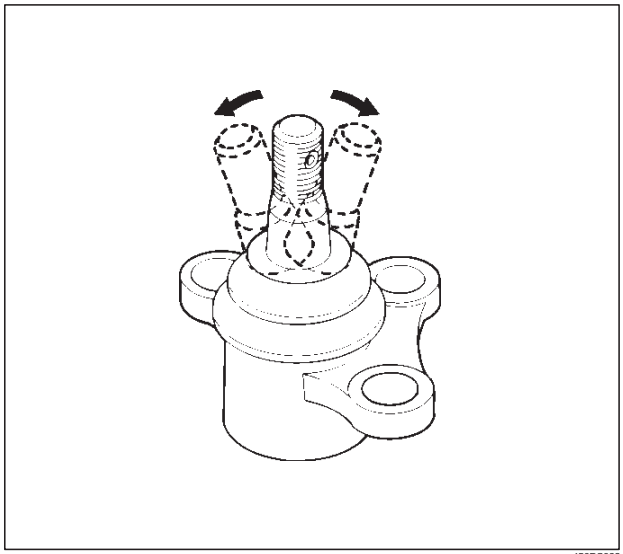

450RS023

- After moving the ball joint 4 or 5 times, attach nut then measure the preload.

Starting torque: 0.5 –3.2 N·m (0.4–2.4 lb ft)

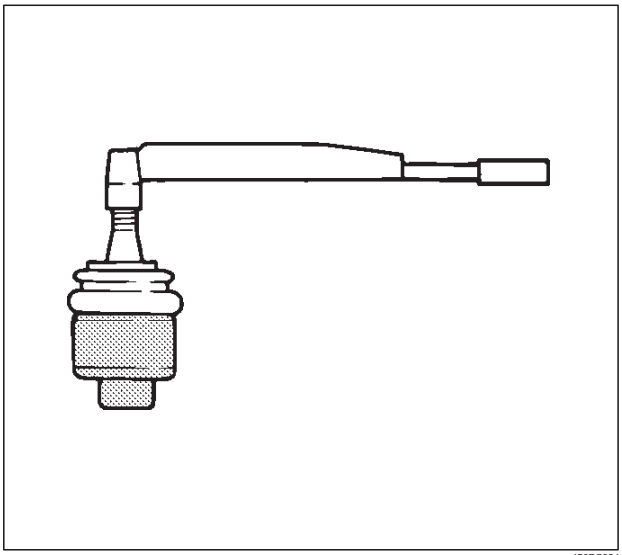

450RS024

If the above limits specified are exceeded, replace the ball joint assembly.

Installation

1. Install upper ball joint.
2. Install bolt and nut, then tighten them to the specified torque.

   Torque: 57 N·m (42 lb ft)
3. Install nut and cotter pin, then tighten the nut to the specified torque with just enough additional torque to align cotter pin holes. Install new cotter pin.

   Torque: 98 N·m (72 lb ft)

Downloaded from www.Manualslib.com manuals search engine

Lower Ball Joint

Lower Ball Joint and Associated Parts

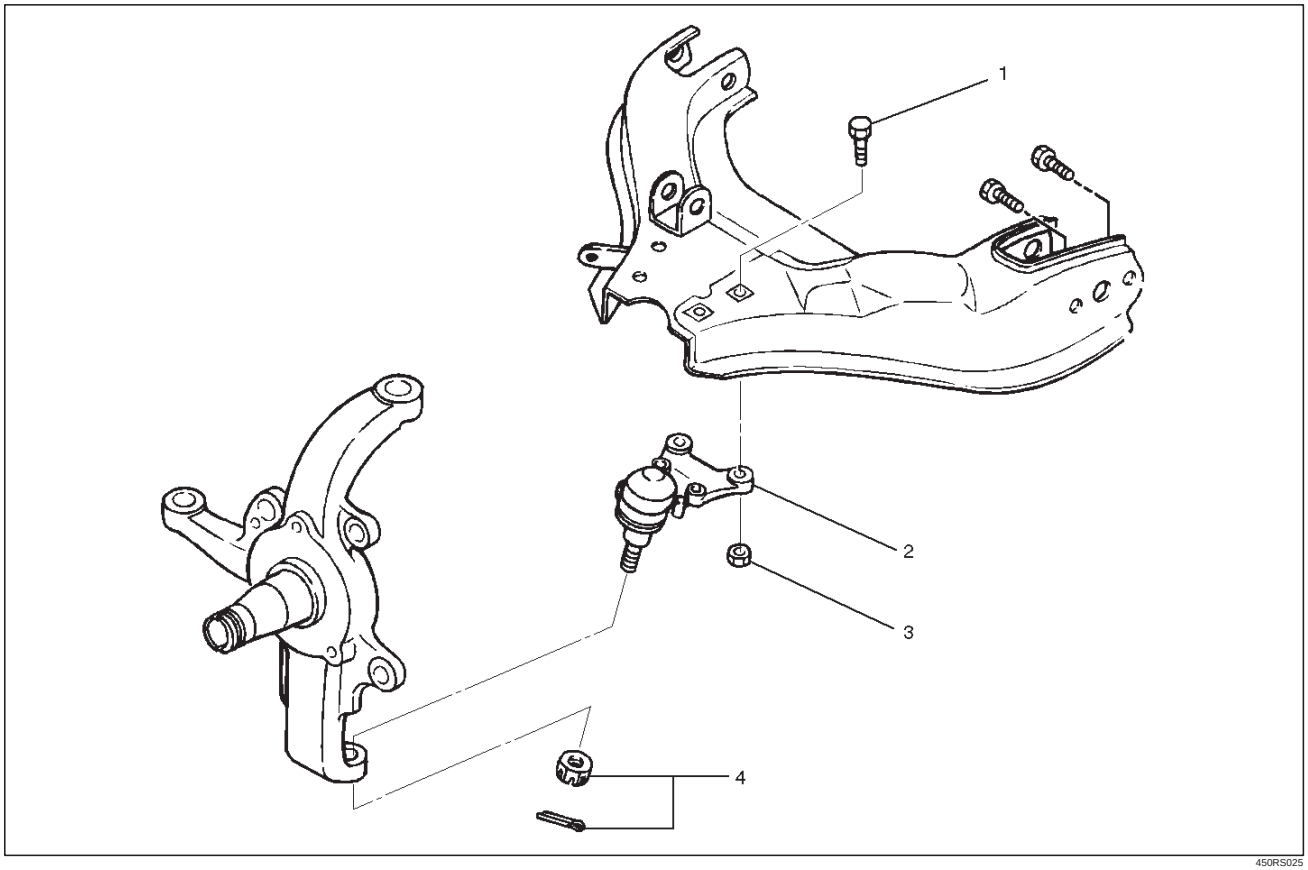

450RS025

Legend

(1) Bolt
(2) Lower Ball Joint
(3) Nut
(4) Nut and Cotter Pin

Removal

1. Raise the vehicle and support the frame with suitable safety stands.
2. Remove wheel and tire assembly. Refer to Wheel Replacement in this section.
3. Remove the outer track rod from the knuckle. Refer to Steering Linkage in Steering section.
4. Remove the retaining ring from the front axle driving shaft to release the shaft from hub. Refer to Front Hub and Disc in Driveline/Axle section.
5. Support lower control arm with a jack.
6. Remove lower ball joint nut and cotter pin, then use remover J–29107 to remove the lower ball joint from the knuckle.

CAUTION: Be careful not to damage the ball joint boot.

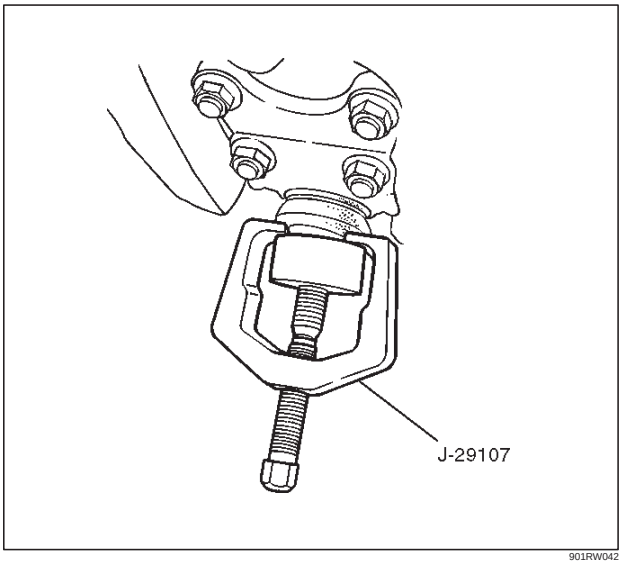

901RW042

Downloaded from www.Manualslib.com manuals search engine

7. Remove nut.
8. Remove lower ball joint.
9. Remove bolt.

Inspection and Repair

Make necessary parts replacement if wear, damage, corrosion or any other abnormal conditions are found through inspection.

- Inspect the lower end boot for damage or grease leak. Move the ball joint as shown in the figure to confirm its normal movement .
- Inspect screw/taper area of ball for damage.
- If any defects are found by the above inspections, replace the ball joint assembly with new one.

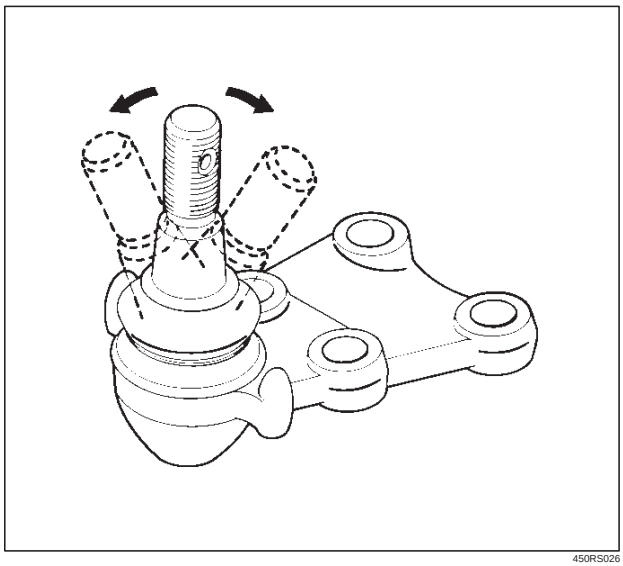

450RS026

- After moving the ball joint 4 or 5 times, attach nut the measure the preload.

Starting torque: 0.5–6.4 N·m (0.4–4.7 lb ft)

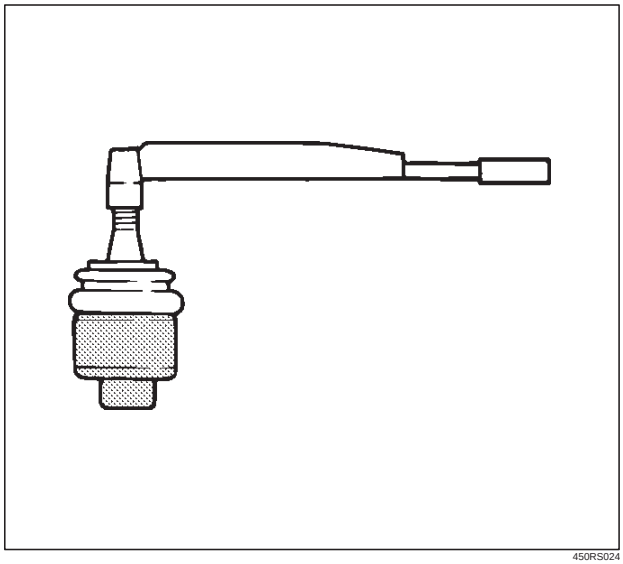

450RS024

- If the above limits specified are exceeded, replace the ball joint assembly.

Installation

1. Install bolt.
2. Install lower ball joint.
3. Install nut and tighten it to the specified torque.

   Torque: 103 N·m (76 lb ft)

4. Install nut, then tighten it to the specified torque with just enough additional torque to align cotter pin holes. Install new cotter pin.

   Torque: 147 N·m (108 lb ft)

Downloaded from www.Manualslib.com manuals search engine

Main Data and Specifications

General Specifications

Front suspension	Type	Independent wishbone arms, torsion bar spring with stabilizer bar.
Torsion bar spring	Length	1217 mm (47.9 in)
	Diameter	26.6 mm (1.05 in)
Front shock absorber	Type	Hydraulic, double acting, telescopic
	Piston diameter	30.0 mm (1.18 in)
	Stroke	130.0 mm (5.12 in)
	Compressed length	390.0 mm (15.35 in)
	Extended length	260.0 mm (10.24 in)
Stabilizer bar	Diameter	26.0 mm (1.02 in)

Torque Specifications

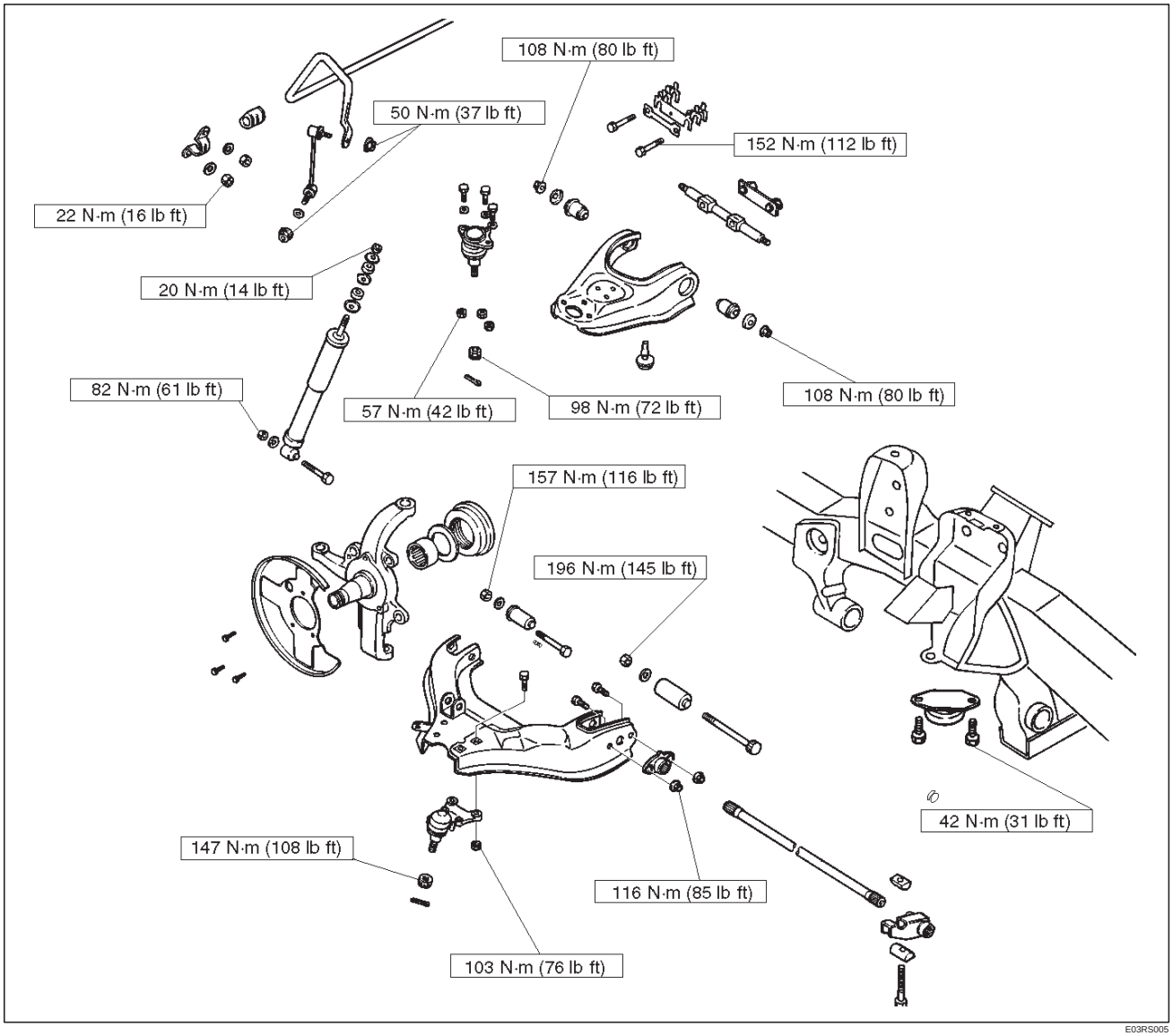

E03RS005

Downloaded from www.Manualslib.com manuals search engine

Special Tools

ILLUSTRATION	TOOL NO. TOOL NAME
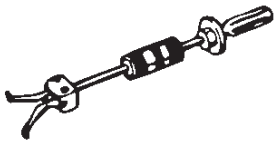 901RS283	**J–23907** Remover; Needle bearing
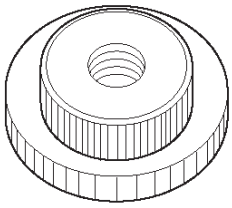 901RS284	**J–36838** Installer; Needle bearing
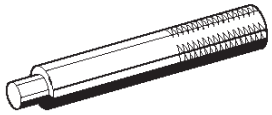 901RS285	**J–8092** Grip
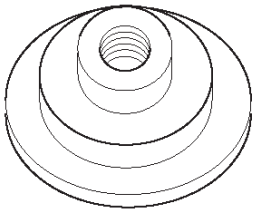 901RS162	**J–41468** Installer; Oil seal
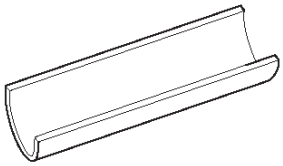 901RS286	**J–39376** Installer; Upper arm bushing
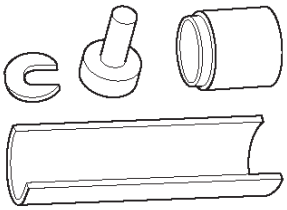 901RS287	**J–29755** Remover and Installer Upper arm bushing

ILLUSTRATION	TOOL NO. TOOL NAME
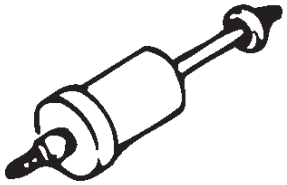 901RS288	**J–36833** Remover and Installer kit; Lower arm front bushing
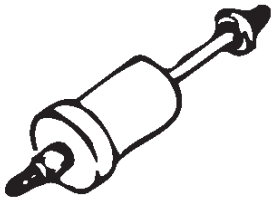 901RS289	**J–36834** Remover and Installer kit; Lower arm rear bushing
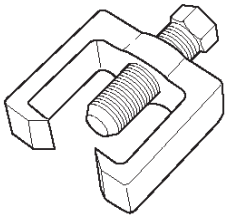 901RS290	**J–36831** Tie rod end remover
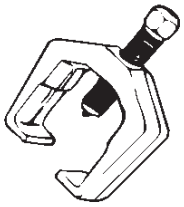 901RS279	**J–29107** Lower end remover

Downloaded from www.Manualslib.com manuals search engine

TROOPER

SUSPENSION

REAR SUSPENSION

CONTENTS

Service Precaution 3D–1
General Description 3D–2
Coil Spring 3D–3
Coil Spring and Associated Parts 3D–3
Removal 3D–3
Inspection and Repair 3D–4
Installation 3D–4
Shock Absorber 3D–5
Shock Absorber and Associated Parts 3D–5
Removal 3D–5
Inspection and Repair 3D–5
Installation 3D–5
Trailing Link 3D–6
Trailing Link and Associated Parts 3D–6
Removal 3D–6
Inspection and Repair 3D–6
Installation 3D–7
Center Link 3D–8
Center Link and Associated Parts 3D–8
Removal 3D–8
Inspection and Repair 3D–8
Installation 3D–9
Lateral Rod 3D–10
Lateral Rod and Associated Parts 3D–10
Removal 3D–10
Inspection and Repair 3D–10
Installation 3D–11
Stabilizer Bar 3D–12
Stabilizer Bar and Associated Parts 3D–12
Removal 3D–12
Inspection and Repair 3D–12
Installation 3D–13
Main Data and Specifications 3D–14
Special Tools 3D–16

Service Precaution

WARNING: THIS VEHICLE HAS A SUPPLEMENTAL RESTRAINT SYSTEM (SRS). REFER TO THE SRS COMPONENT AND WIRING LOCATION VIEW IN ORDER TO DETERMINE WHETHER YOU ARE PERFORMING SERVICE ON OR NEAR THE SRS COMPONENTS OR THE SRS WIRING. WHEN YOU ARE PERFORMING SERVICE ON OR NEAR THE SRS COMPONENTS OR THE SRS WIRING, REFER TO THE SRS SERVICE INFORMATION. FAILURE TO FOLLOW WARNINGS COULD RESULT IN POSSIBLE AIR BAG DEPLOYMENT, PERSONAL INJURY, OR OTHERWISE UNNEEDED SRS SYSTEM REPAIRS.

CAUTION: Always use the correct fastener in the proper location. When you replace a fastener, use ONLY the exact part number for that application. ISUZU will call out those fasteners that require a replacement after removal. ISUZU will also call out the fasteners that require thread lockers or thread sealant. UNLESS OTHERWISE SPECIFIED, do not use supplemental coatings (Paints, greases, or other corrosion inhibitors) on threaded fasteners or fastener joint interfaces. Generally, such coatings adversely affect the fastener torque and the joint clamping force, and may damage the fastener. When you install fasteners, use the correct tightening sequence and specifications. Following these instructions can help you avoid damage to parts and systems.

Downloaded from www.Manualslib.com manuals search engine

General Description

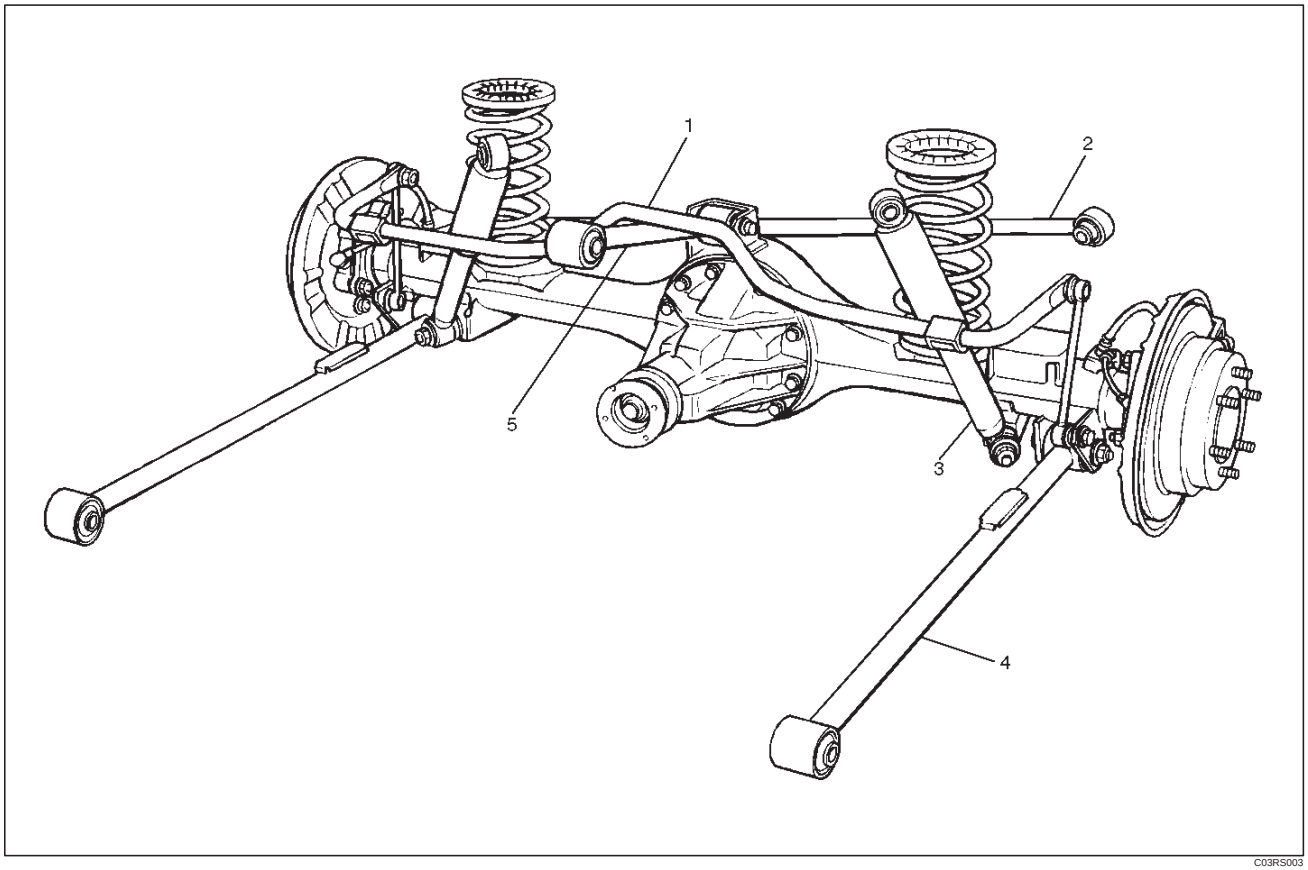

Legend

(1) Stabilizer Bar
(2) Lateral Rod
(3) Shock Absorber
(4) Trailing Link
(5) Center Link

The rear suspension is a 4-link, coil spring type suspension with a stabilizer bar, consisting of two trailing links, center link, lateral rod, shock absorber, and stabilizer. In this suspension, the links are specially arranged to enable the rear axle to move freely, thereby expanding suspension stroke, reducing friction, and improving lateral rigidity and roll control. All these result in improved stability, riding comfort, and rough road maneuverability.

Each link connects the axle housing with the frame through a runner bushing. The axle housing is supported by the trailing links and center link longitudinally and by the lateral rod latitudinally.

Downloaded from www.Manualslib.com manuals search engine

Coil Spring

Coil Spring and Associated Parts

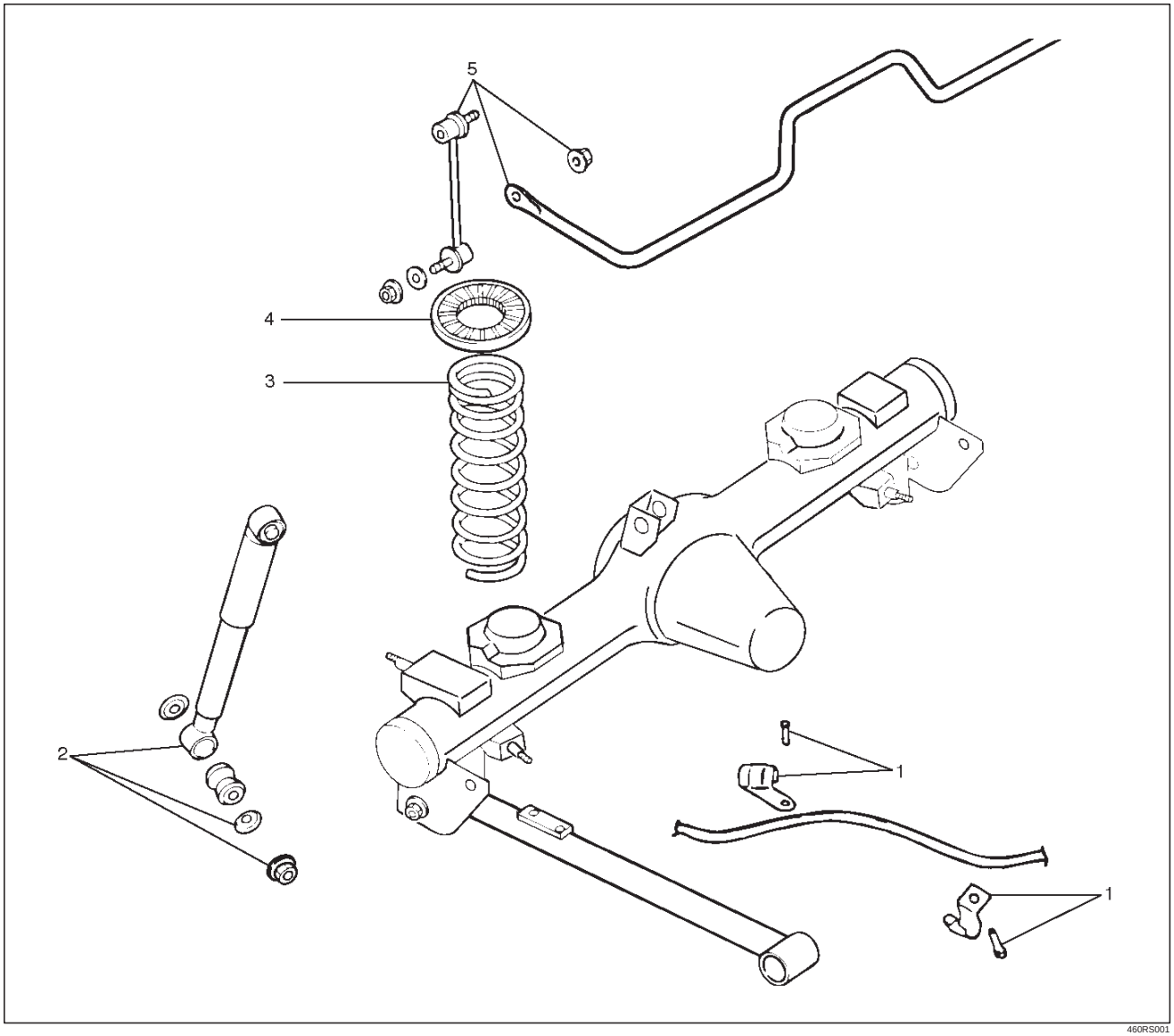

Legend

(1) Parking Brake Cable Bracket
(2) Shock Absorber
(3) Coil Spring
(4) Insulator
(5) Stabilizer Bar

Removal

1. Raise the vehicle and support the frame with suitable safety stands.
2. Support the rear axle case with a jack.
3. Remove the parking brake cable bracket from the trailing link.
4. Disconnect the stabilizer bar at the stabilizer link.
5. Remove the shock absorber from the axle case.
6. Remove spring insulator.
7. Remove the lower insulator and coil spring while lowering the rear axle case.

CAUTION: Be sure not to let the brake hose, parking brake cable, and breather hose extend to their full length.

Downloaded from www.Manualslib.com manuals search engine

Inspection and Repair

Make necessary correction or parts replacement if wear, damage, corrosion or any other abnormal conditions are found through inspection.
Check the following parts:

- Coil spring
- Insulator

Installation

1. Install coil spring and make sure that the coil spring is installed in the proper position. Paint mark(1) should be downward.

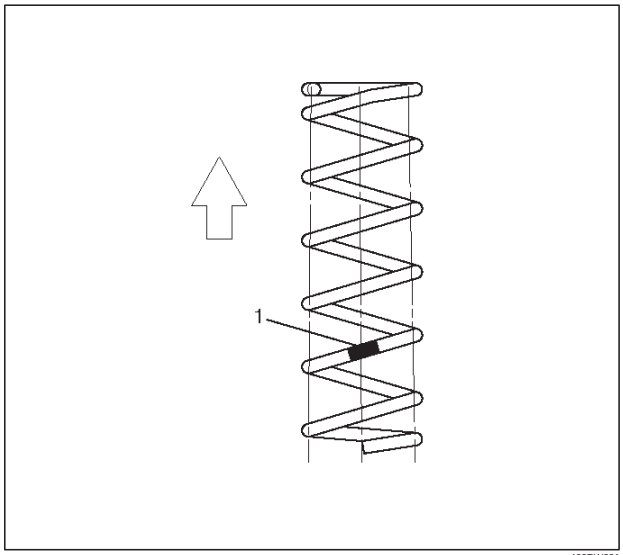

460RW001

2. Fit the end of the coil spring to the coil spring seat and mount the coil spring on the rear axle case.

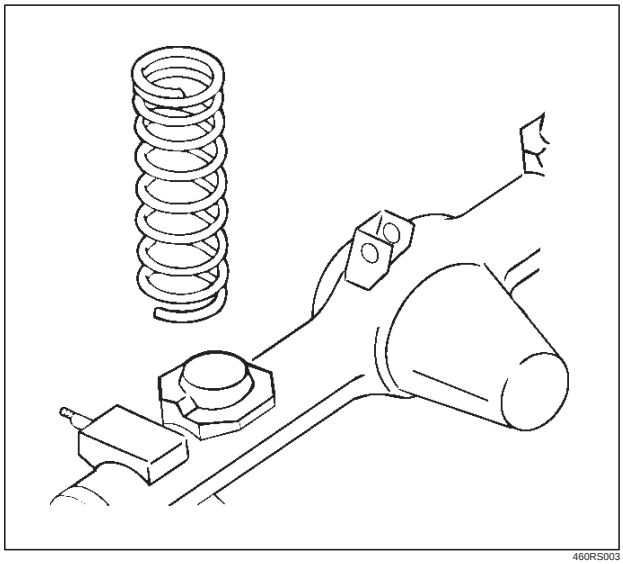

460RS003

3. Install the insulator on the coil spring. Jack up the axle case gently with the top of the coil spring set to the spring seat on the frame side.

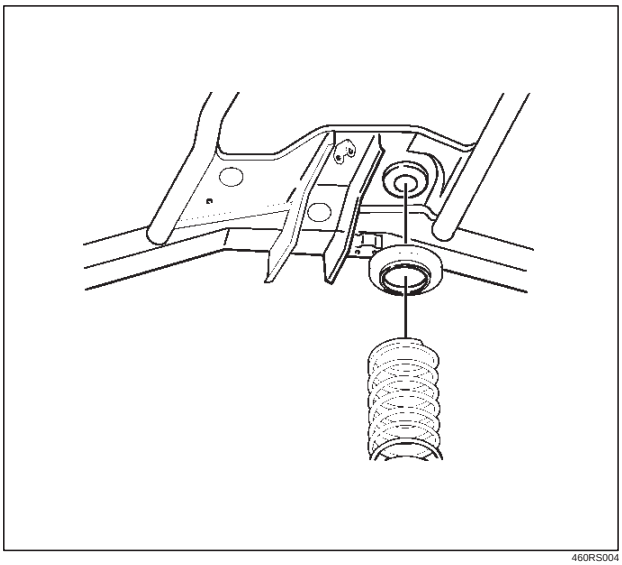

460RS004

4. Install shock absorber and tighten the nut lightly,then retighten it to the specified torque after the vehicle is at curb height.

NOTE: When mounting shock absorber, be sure not to use grease on bushings or any other nearby part.

Torque: 78 N·m (58 lb ft)

5. Install stabilizer bar.

Torque: 50 N·m (37 lb ft)

6. Install parking brake cable bracket.

Downloaded from www.Manualslib.com manuals search engine

Shock Absorber

Shock Absorber and Associated Parts

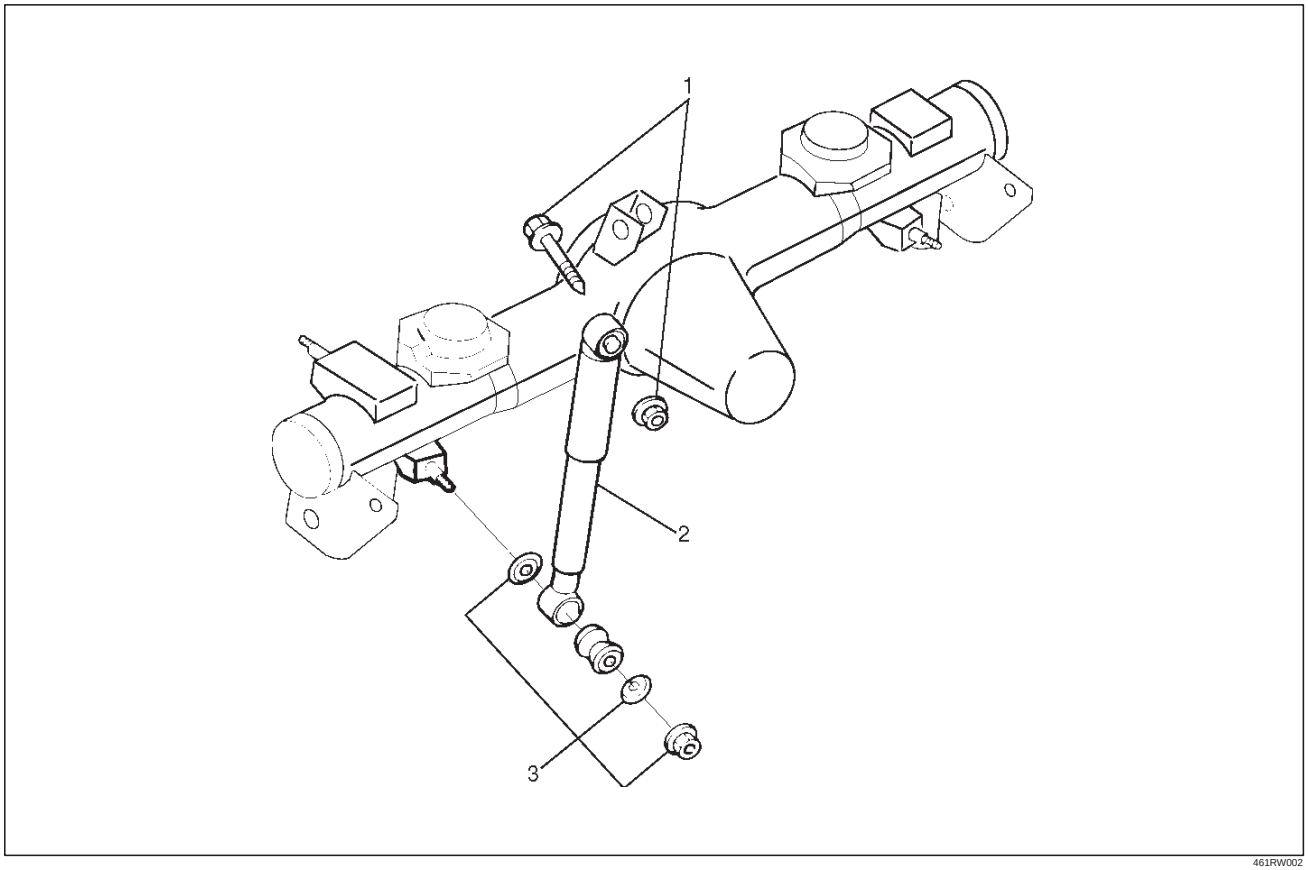

Legend

(1) Bolt and Nut
(2) Shock Absorber
(3) Nut and Washer

Removal

1. Remove shock absorber fixing nut and washer.
2. Remove shock absorber fixing bolt and nut.
3. Remove shock absorber.

Inspection and Repair

Make necessary correction or parts replacement if wear, damage, corrosion or any other abnormal conditions are found through inspection.
Check the following parts:

- Shock absorber
- Rubber bushing (Axle side)

NOTE: When mounting rubber bushings, be sure not to use grease on bushings or any other nearby part.

Installation

1. Install shock absorber. When mounting shock absorber, be sure not to use grease on bushings or any other nearby part.
2. Install bolt and nut, then tighten the bolt and nut lightly. Retighten to the bolt and nut specified torque after the vehicle is at curb height.

   Torque: 95 N·m (70 lb ft)
3. Install nut and washer, then tighten the nut lightly. Retighten to the nut specified torque after the vehicle is at curb height.

   Torque: 78 N·m (58 lb ft)

Downloaded from www.Manualslib.com manuals search engine

Trailing Link

Trailing Link and Associated Parts

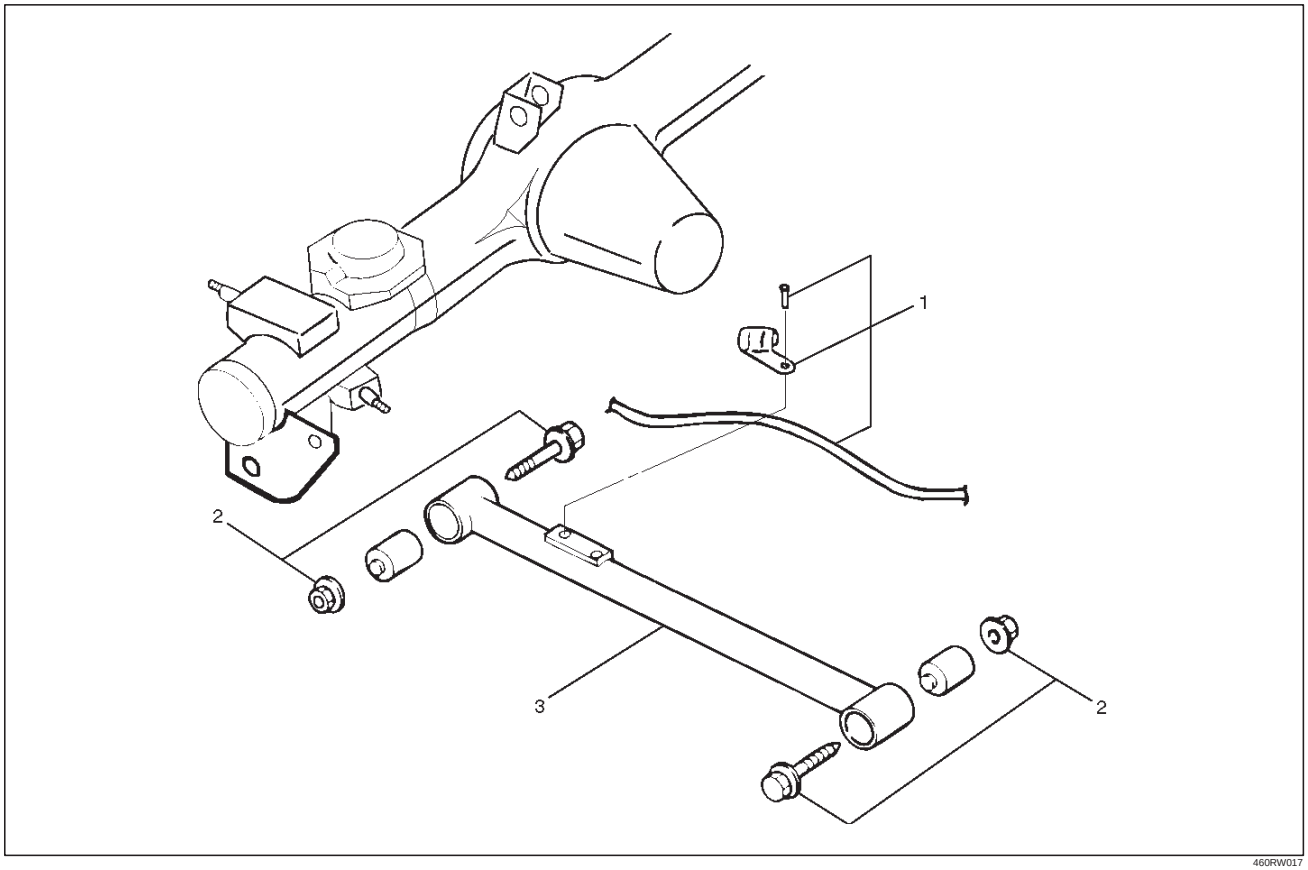

460RW017

Legend

(1) Parking Brake Cable
(2) Bolt and Nut
(3) Trailing Link

Removal

1. Remove the parking brake cable from the trailing link.
2. Remove the trailing link fixing bolt and nut.
3. Remove trailing link.

Inspection and Repair

Make necessary correction or parts replacement if wear, damage, corrosion or any other abnormal conditions are found through inspection.

1. Trailing link
2. Rubber bushing
   - Remove the rubber bushing by using remover J–39214.

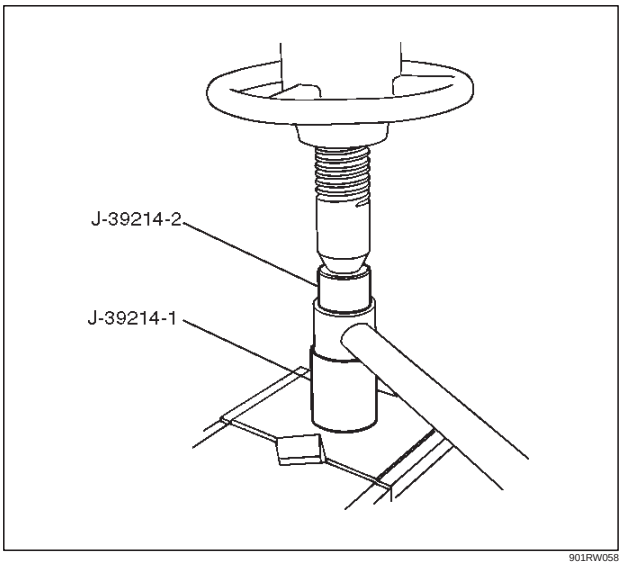

901RW058

Downloaded from www.Manualslib.com manuals search engine

- Install the rubber bushing by using installer J–39214.

NOTE: When mounting rubber bushings, be sure not to use grease on bushings or any other nearby part.

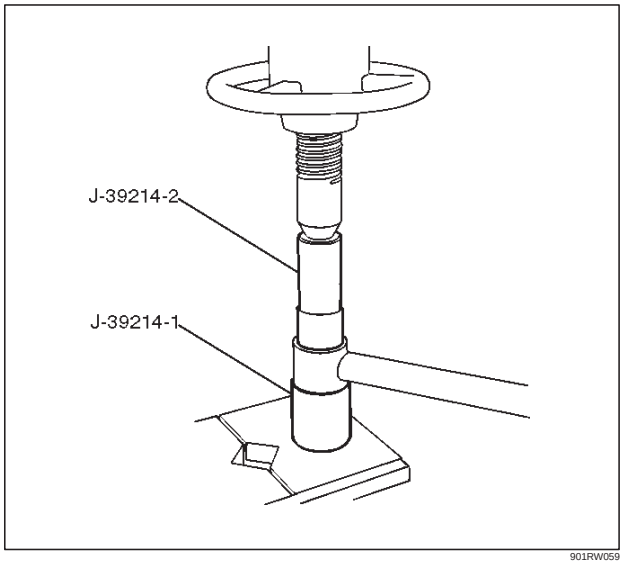

901RW059

Installation

1. Install trailing link. Make sure that the trailing link is in its correct position.

NOTE: When mounting trailing link, be sure not to use grease on bushings or any other nearby part.

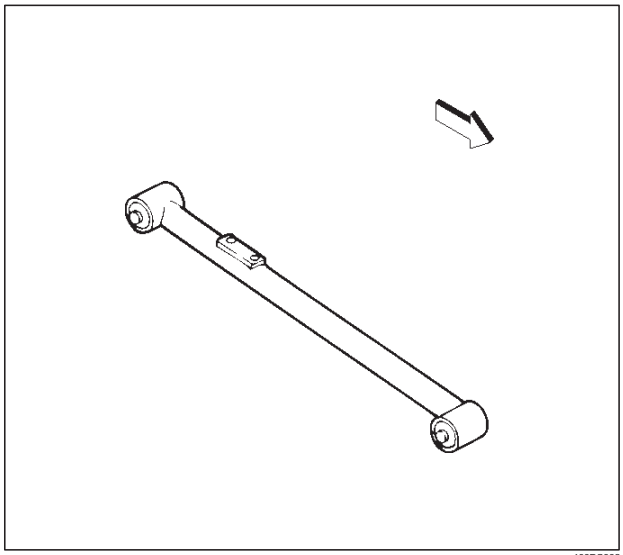

460RS008

2. Install bolt and nut. Tighten the bolts and nuts lightly, then retighten them to the specified torque after the vehicle is at curb height.

   Torque: 137 N·m (101 lb ft)

3. Install parking brake cable.

CAUTION: The parking brake cable should not be overstrained or slackened.

Downloaded from www.Manualslib.com manuals search engine

Center Link

Center Link and Associated Parts

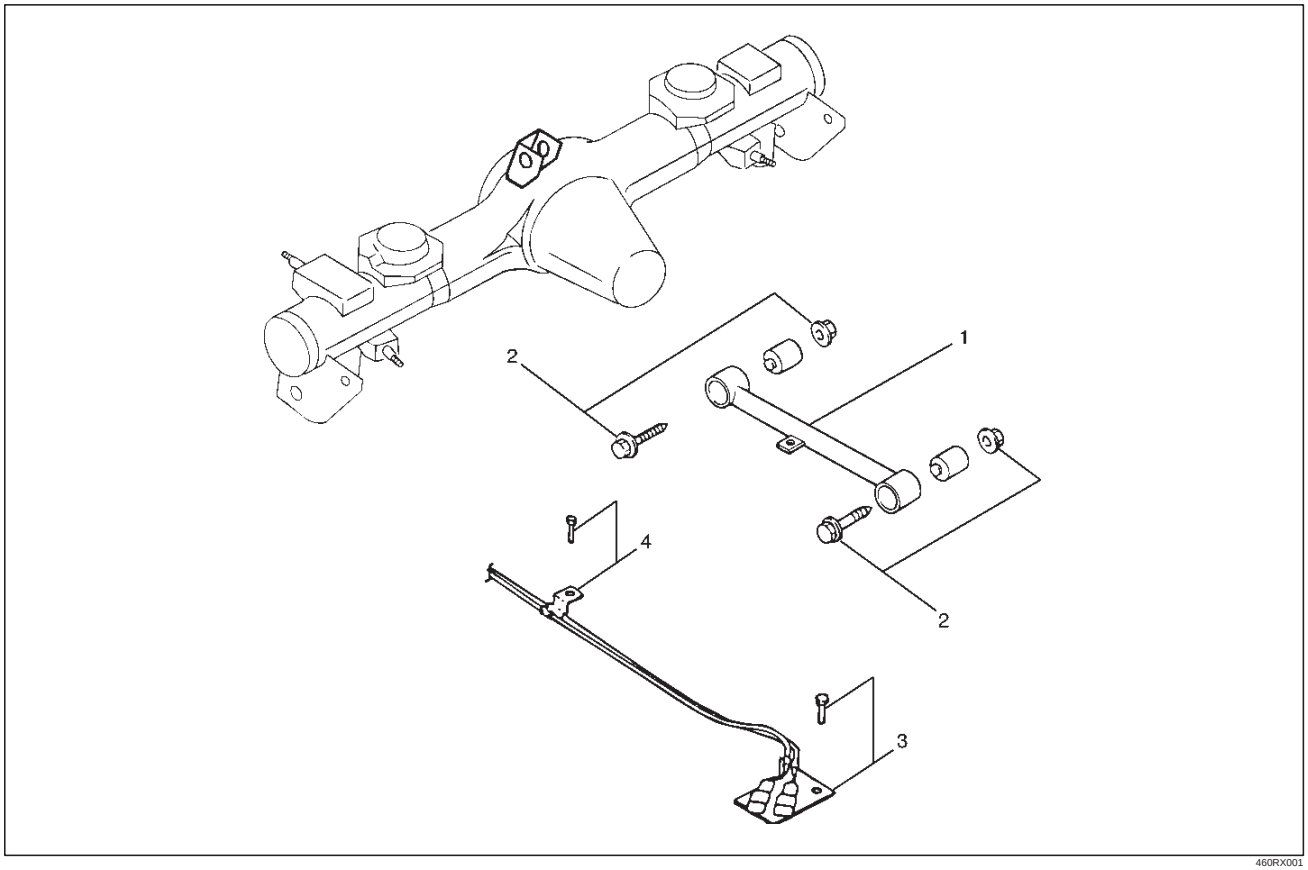

460RX001

Legend

(1) Center Link
(2) Bolt and Nut
(3) Speed Sensor Cable Bracket
(4) Speed Sensor Cable

Removal

1. Remove the speed sensor cable from the center link.
2. Remove the speed sensor cable bracket from the frame.
3. Remove bolt and nut.
4. Remove center link.

Inspection and Repair

Make necessary correction or parts replacement if wear, damage, corrosion or any other abnormal conditions are found through inspection.

1. Center link
2. Rubber bushing
   - Remove the rubber bushing by using remover J–39214.

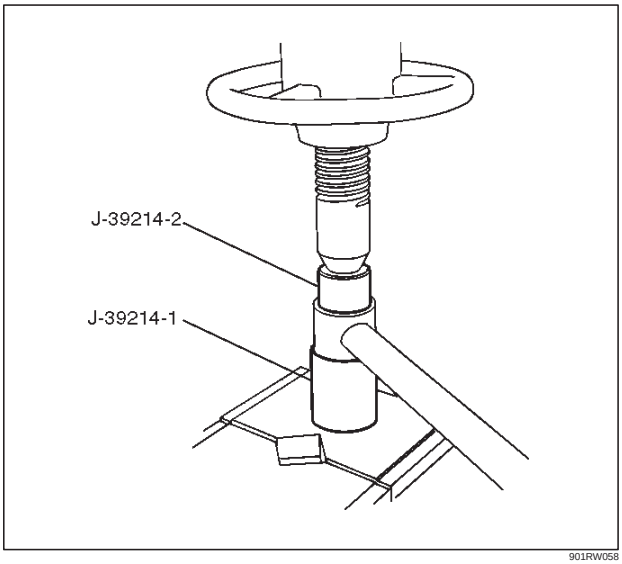

901RW058

Downloaded from www.Manualslib.com manuals search engine

- Install the rubber bushing by using to installer J–39214.

NOTE: When mounting rubber bushings, be sure not to use grease on bushings or any other nearby part.

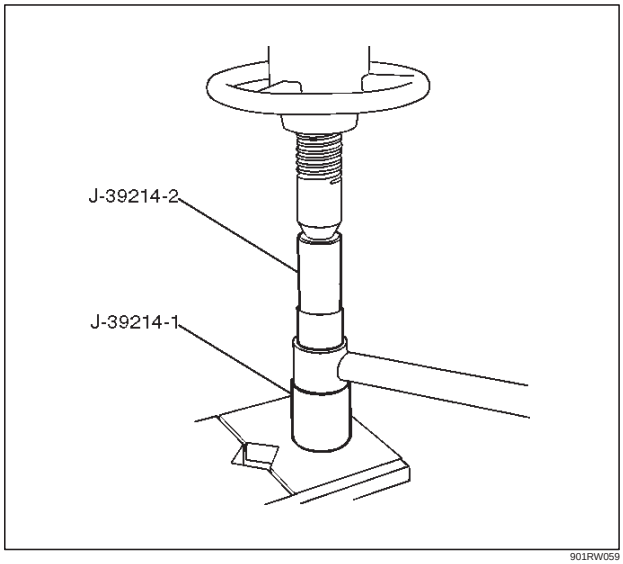

901RW059

Installation

1. Install center link. Make sure that the center link is in its correct position.

NOTE: When mounting center link, be sure not to use grease bushings or any other nearby part.

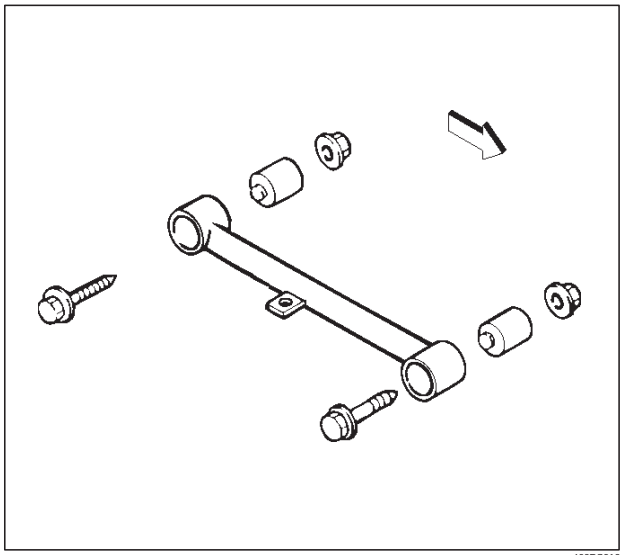

460RS010

2. Install bolt and nut. Tighten the bolts and nuts lightly, then retighten them to the specified torque after the vehicle is at curb height.

   Torque: 137 N·m (101 lb ft)

3. Install speed sensor cable bracket.
4. Install speed sensor cable.

Downloaded from www.Manualslib.com manuals search engine

Lateral Rod

Lateral Rod and Associated Parts

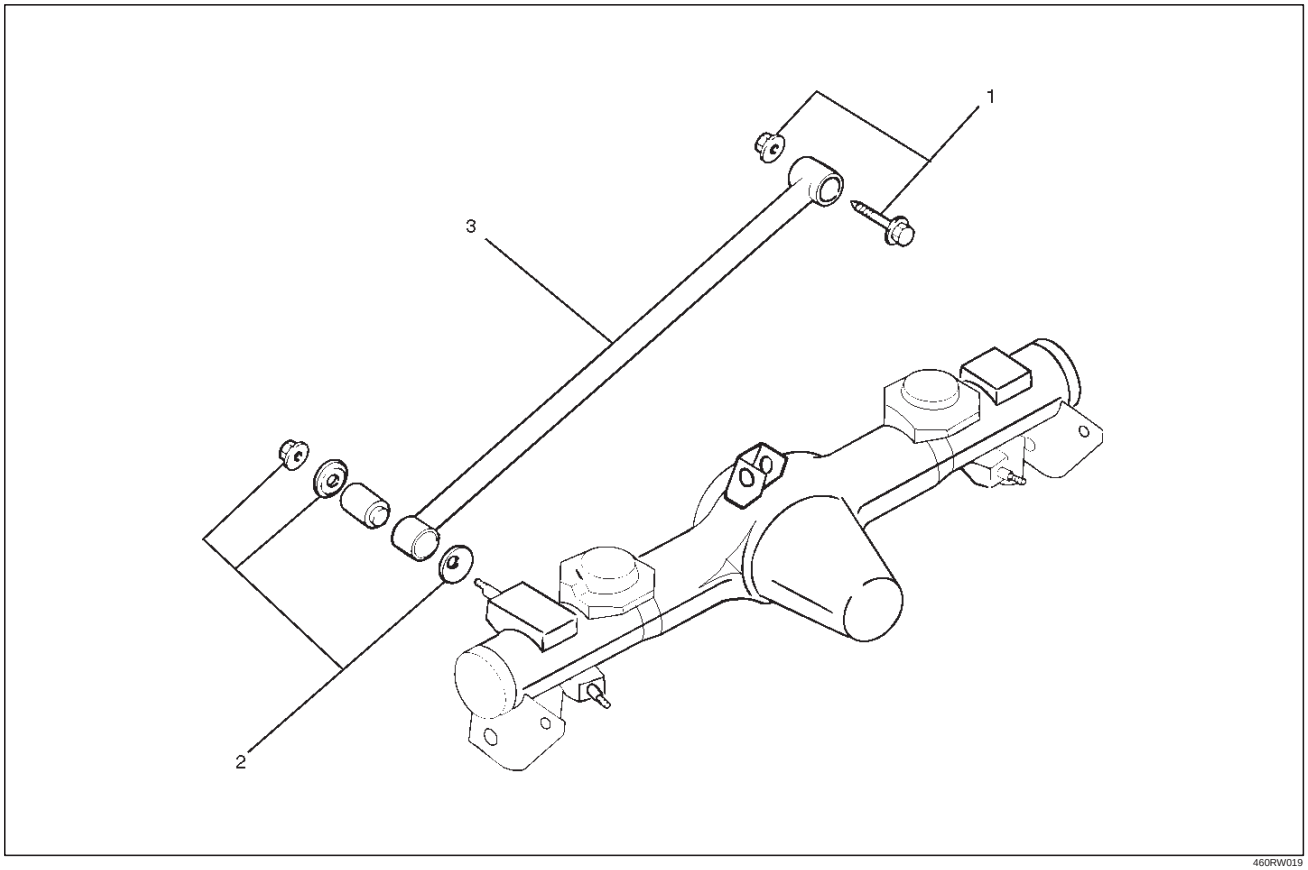

460RW019

Legend

(1) Bolt and Nut
(2) Nut and Washer
(3) Lateral Rod

Removal

1. Remove nut and washer.
2. Remove bolt and nut.
3. Remove lateral rod.

Inspection and Repair

Make necessary correction or parts replacement if wear, damage, corrosion or any other abnormal condition are found through inspection.

1. Lateral rod
2. Rubber bushing (Frame side)
   - Remove the rubber bushing (Frame side) by using remover J–39214.

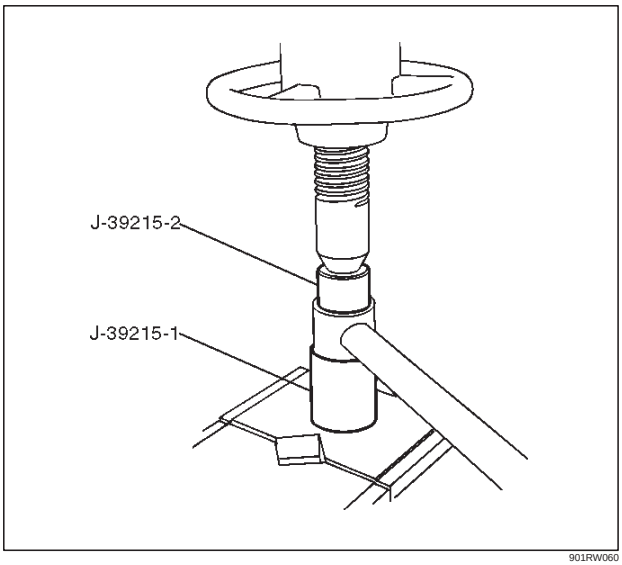

901RW060

Downloaded from www.Manualslib.com manuals search engine

- Install the rubber bushing (Frame side) by using Installer J–39215.

NOTE: When mounting rubber bushings, do not use grease on bushings or any other nearby parts.

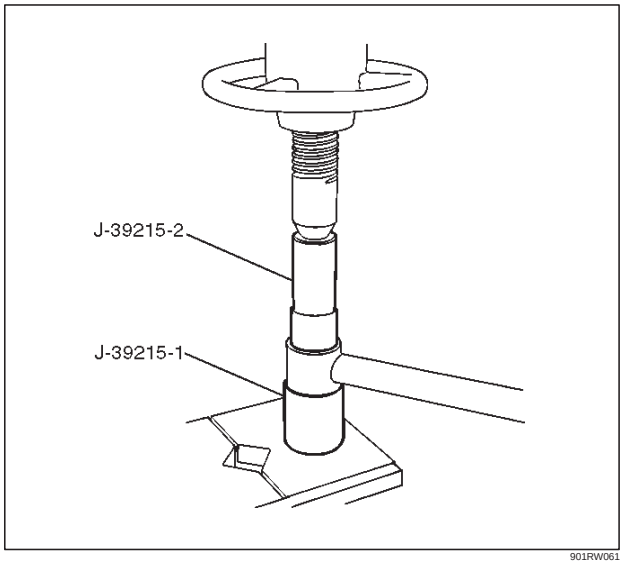

901RW061

3. Rubber bushing (Axle side)
   - Remove the rubber bushing (Axle side) by using remover J–39792.

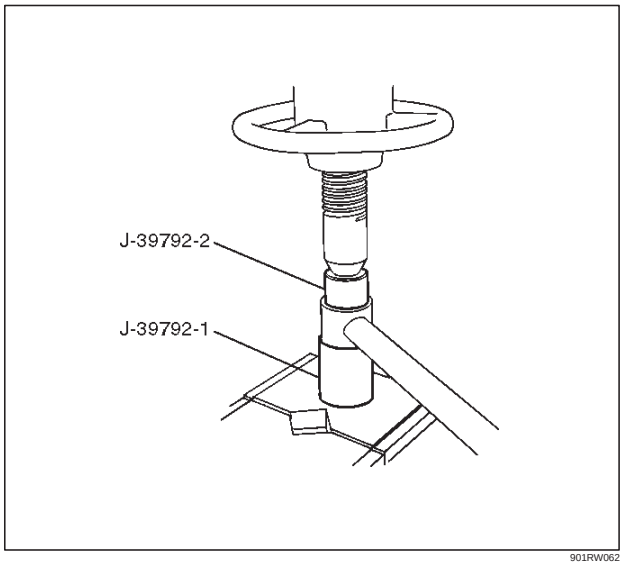

901RW062

- Install the rubber bushing (Axle side) by using installer J–39792.

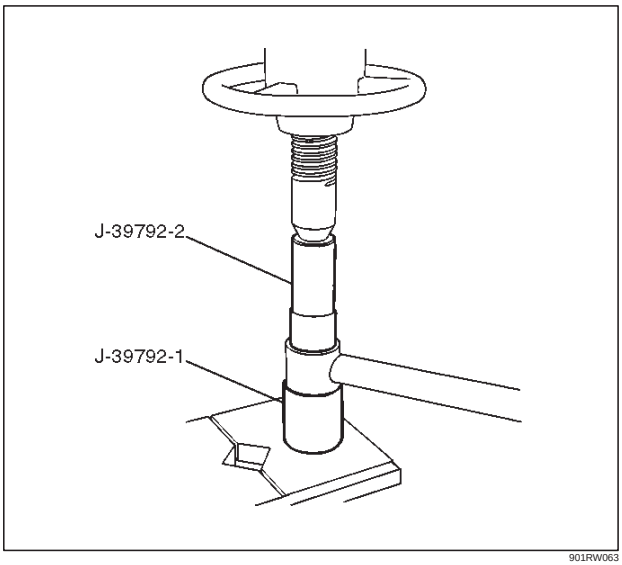

901RW063

Installation

1. Install lateral rod and make sure that the lateral rod is in its correct position.

NOTE: When mounting lateral rod, be sure not to use grease on bushings or any other nearby part.

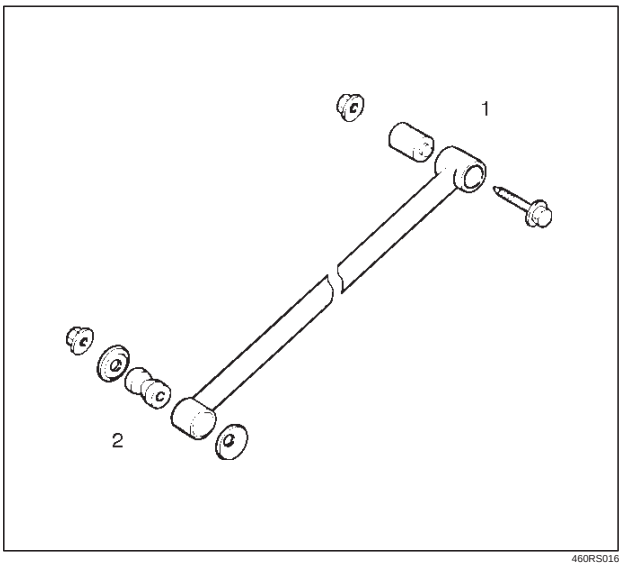

460RS016

Legend

(1) Frame Side
(2) Axle Side

2. Install bolt and nut. Tighten the bolt and nut lightly, then retighten them to the specified torque after the vehicle is at curb height.

   Torque: 137 N·m (101 lb ft)

3. Install nut and washer. Tighten the nut lightly, then retighten the nut to the specified torque after the vehicle is at curb height.

   Torque: 78 N·m (58 lb ft)

Downloaded from www.Manualslib.com manuals search engine

Stabilizer Bar

Stabilizer Bar and Associated Parts

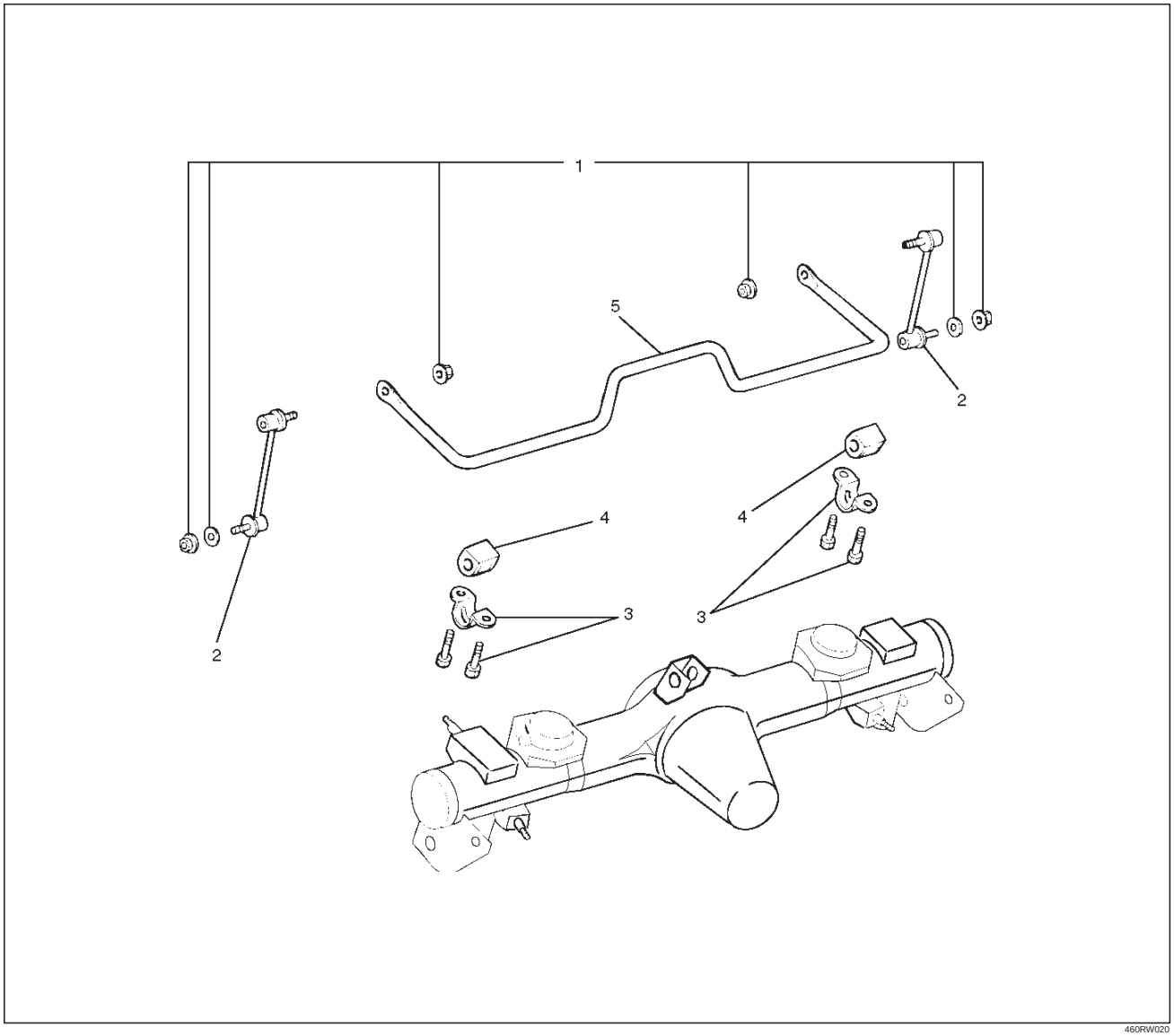

Legend

(1) Nut and Washer
(2) Link
(3) Bracket
(4) Rubber Bushing
(5) Stabilizer Bar

Removal

1. Raise the vehicle and support the frame with suitable safety stands.
2. Remove wheel and tire assembly. Refer to Wheel Replacement in this section.
3. Remove nut and washer.
4. Remove link.

CAUTION: Be careful not to damage the ball joint boot.

5. Remove bracket.
6. Remove rubber bushing.
7. Remove stabilizer bar.

Inspection and Repair

Make necessary correction or parts replacement if wear, damage, corrosion or any other abnormal conditions are found through inspection.
Check the following parts:

- Stabilizer bar
- Rubber bushing
- Link ball joint

Downloaded from www.Manualslib.com manuals search engine

Installation

1. Install stabilizer bar.
2. Install rubber bushing.
3. Install bracket and tighten to the specified torque.

   Torque: 22 N·m (16 lb ft)
4. Install link.
5. Install nut and washer, then tighten the nut to the specified torque.

   Torque: 50 N·m (37 lb ft)

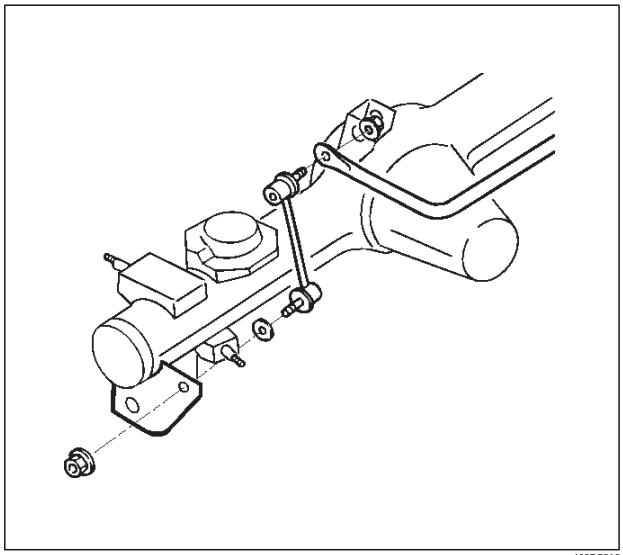

460RS018

Downloaded from www.Manualslib.com manuals search engine

Main Data and Specifications

General Specifications

Rear suspension	Type	4–Link, coil spring type with stabilizer bar.
Coil spring	Free length	402mm (15.83in)
	Spring diameter	12.7mm (0.5in)
	Coil diameter (inner)	105mm (4.13in)
	Effective No. of turns	5.32
	Total No. of turns	6.82
Shock absorber	Type	Hydraulic, double acting, telescopic
	Piston diameter	25.0mm (0.98in)
	Stroke	175mm (6.89in)
	Extended length	489mm (19.25in)
	Compressed length	314mm (12.36in)
Stabilizer bar	Diameter	19.0mm (0.75in)

Downloaded from www.Manualslib.com manuals search engine

Torque Specifications

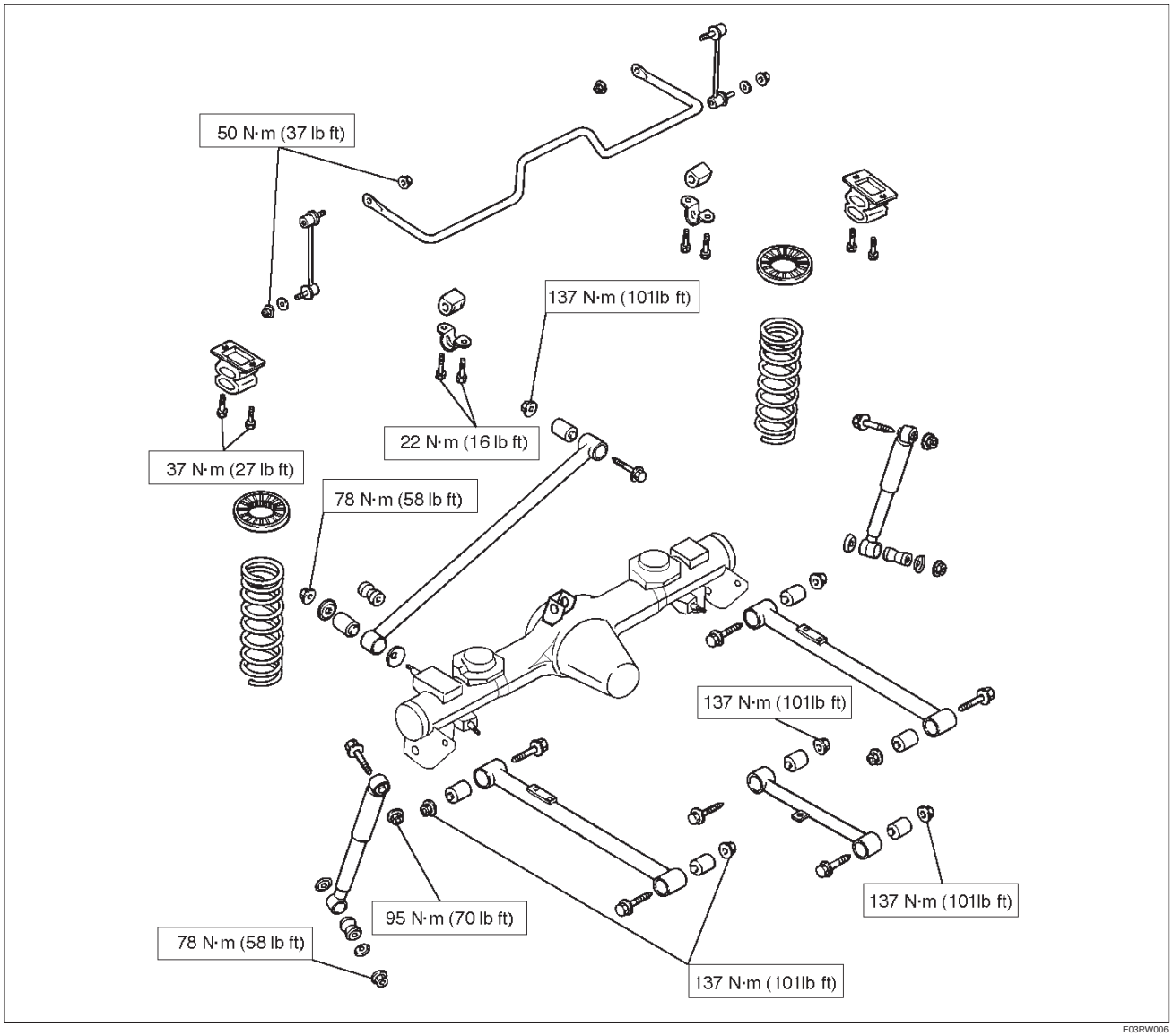

Downloaded from www.Manualslib.com manuals search engine

Special Tools

ILLUSTRATION	**TOOL NO.** TOOL NAME
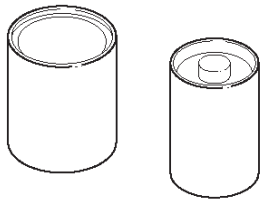	**J–39214** Remover and Installer; Trailing center link bushing
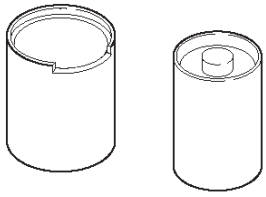	**J–39792** Remover and Installer; Lateral rod bushing (axle side)
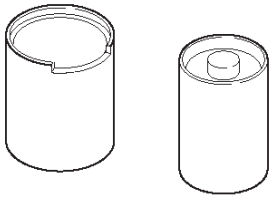	**J–39215** Remover and Installer; Lateral rod bushing

Downloaded from www.Manualslib.com manuals search engine

TROOPER

SUSPENSION

WHEEL AND TIRE SYSTEM

CONTENTS

Service Precaution 3E–1
General Description 3E–2
Diagnosis 3E–3
Wheel 3E–9
Wheel and Associated Parts 3E–9
Removal 3E–9
Installation 3E–9
Tire 3E–10
Tire Replacement 3E–10
General Balance Procedure 3E–10
Balancing Wheel and Tire 3E–11
Main Data and Specifications 3E–12

Service Precaution

WARNING: THIS VEHICLE HAS A SUPPLEMENTAL RESTRAINT SYSTEM (SRS). REFER TO THE SRS COMPONENT AND WIRING LOCATION VIEW IN ORDER TO DETERMINE WHETHER YOU ARE PERFORMING SERVICE ON OR NEAR THE SRS COMPONENTS OR THE SRS WIRING. WHEN YOU ARE PERFORMING SERVICE ON OR NEAR THE SRS COMPONENTS OR THE SRS WIRING, REFER TO THE SRS SERVICE INFORMATION. FAILURE TO FOLLOW WARNING COULD RESULT IN POSSIBLE AIR BAG DEPLOYMENT, PERSONAL INJURY, OR OTHERWISE UNNEEDED SRS SYSTEM REPAIRS.

CAUTION: Always use the correct fastener in the proper location. When you replace a fastener, use ONLY the exact part number for that application. ISUZU will call out those fasteners that require a replacement after removal. ISUZU will also call out the fasteners that require thread lockers or thread sealant. UNLESS OTHERWISE SPECIFIED, do not use supplemental coatings (Paints, greases, or other corrosion inhibitors) on threaded fasteners or fastener joint interfaces. Generally, such coatings adversely affect the fastener torque and the joint clamping force, and may damage the fastener. When you install fasteners, use the correct tightening sequence and specifications. Following these instructions can help you avoid damage to parts and systems.

Downloaded from www.Manualslib.com manuals search engine

General Description

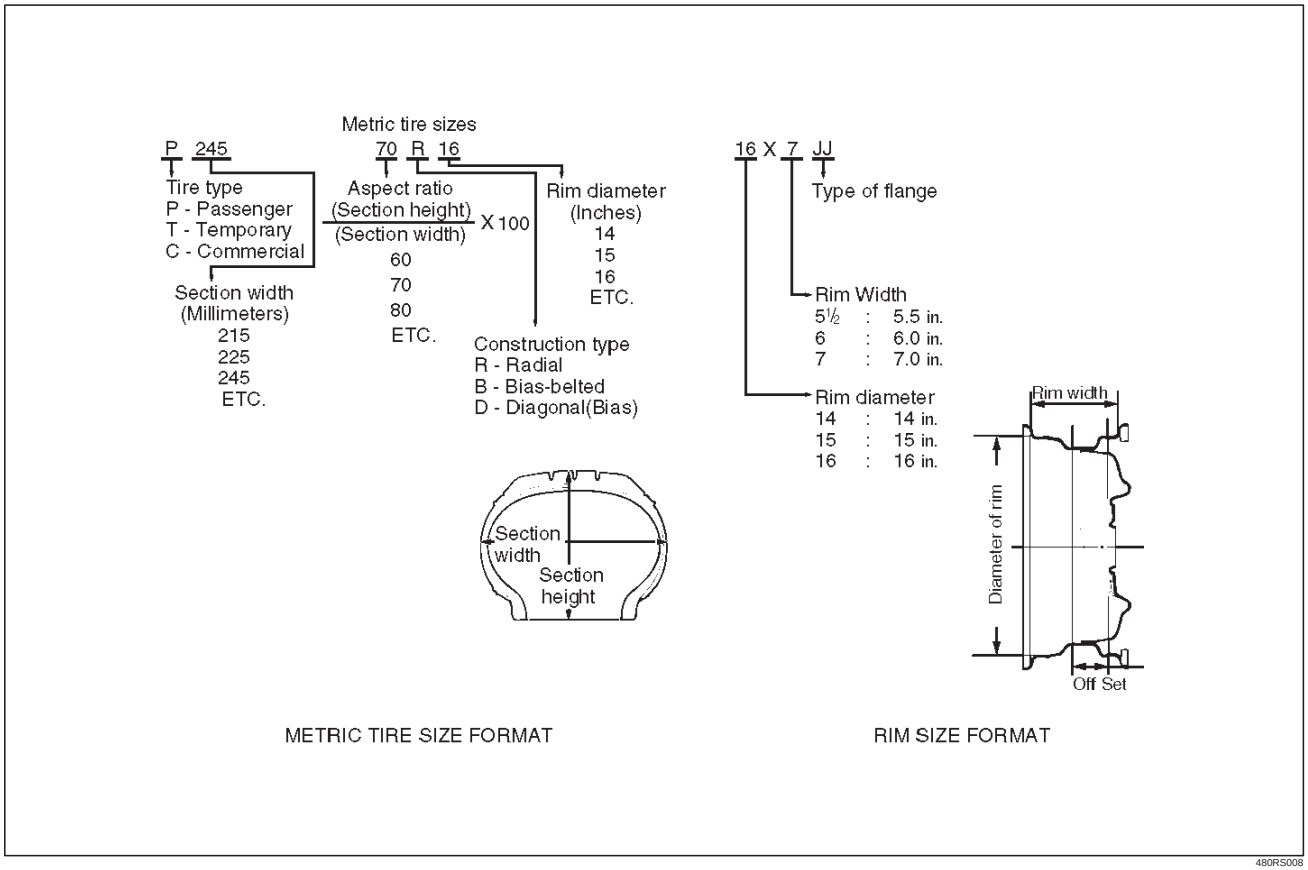

480RS008

Replacement wheels or tires must be equivalent to the originals in load capacity, specified dimension and mounting configuration. Improper size or type may affect bearing life, brake performance, speedometer/odometer calibration, vehicle ground clearance and tire clearance to the body and chassis. All model are equipped with metric sized tubeless steel belted radial tires. Correct tire pressures and driving habits have an important influence on tire life. Heavy cornering, excessively rapid acceleration and unnecessary sharp braking increase premature and uneven wear.

Downloaded from www.Manualslib.com manuals search engine

Diagnosis

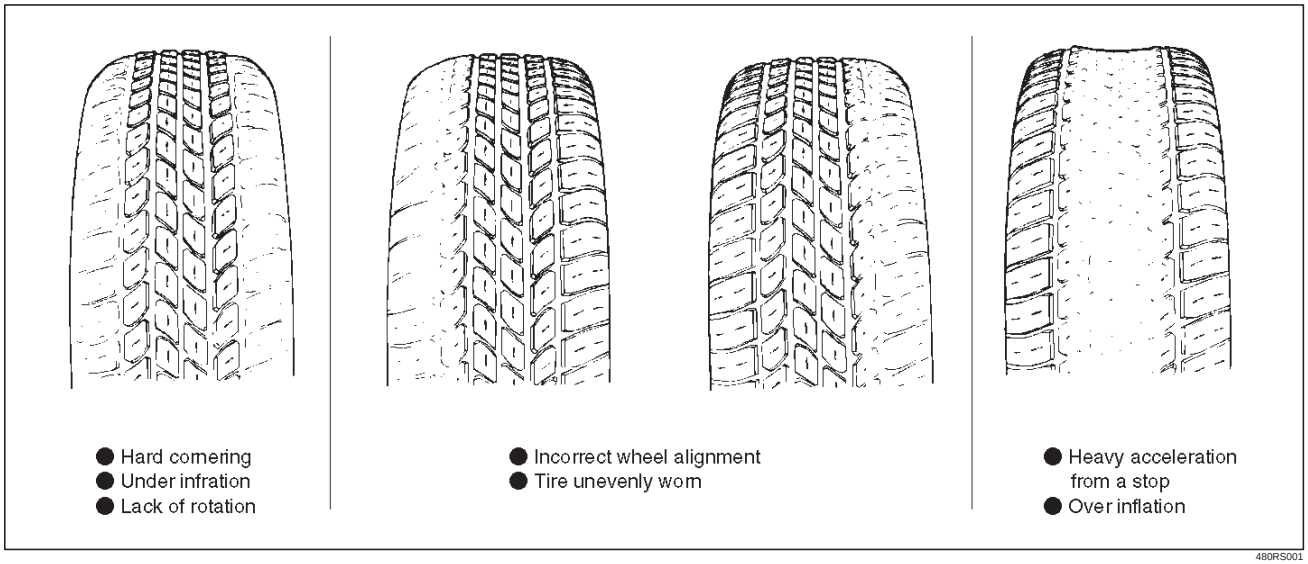

Irregular and Premature Wear

Irregular and/or premature wear has many causes. Some of them are incorrect inflation pressures, lack of tire rotation, poor driving habits or improper wheel alignment. Incorrect inflation is common cause of tire premature wear.

NOTE: Due to their design, radial tires tend to wear faster in the shoulder area, particularly on the front tires. This makes regular rotation especially necessary. After rotation, be sure to check wheel nut torque, and set tire pressures.

Tire Rotation

Tire rotation is recommended to equalize wear for longer tire life.

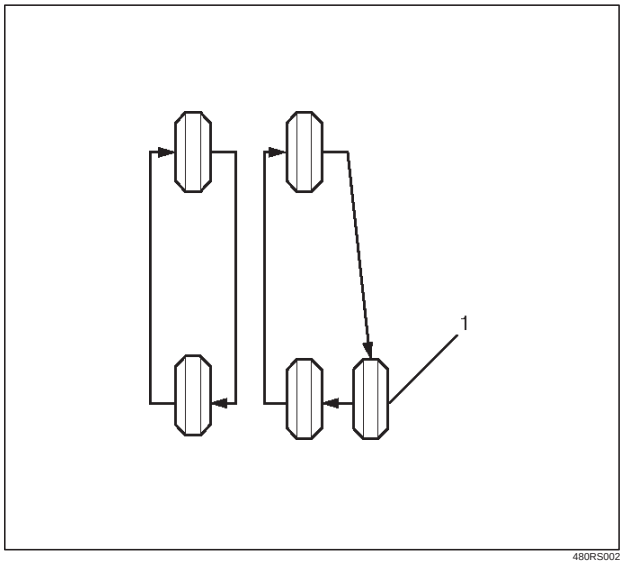

Legend

(1) Spare Tire

If the following conditions are noted, rotate the tires:

- Front tire wear is different from rear.
- Uneven wear exists across the tread of any tire.
- Left and right front tire wear is unequal.
- Left and right rear tire wear is unequal.

Check wheel alignment if the following conditions are noted:

- Left and right front tire wear is unequal.
- Wear is uneven across the tread of any front tire.
- Front tire treads have a scuffed appearance with “feather” edges on one side of the tread ribs or blocks.

Tread Wear Indicators

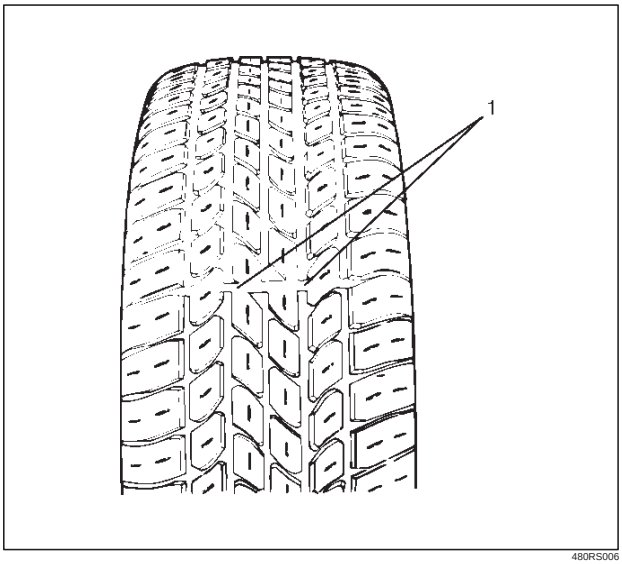

The original equipment tires have built-in tread wear indicators(1) to show when tires need replacement. These indicators may appear as wide bands. When the indicators appear in two or more grooves at three locations, tire replacement is recommended.

Downloaded from www.Manualslib.com manuals search engine

Inflation of Tires

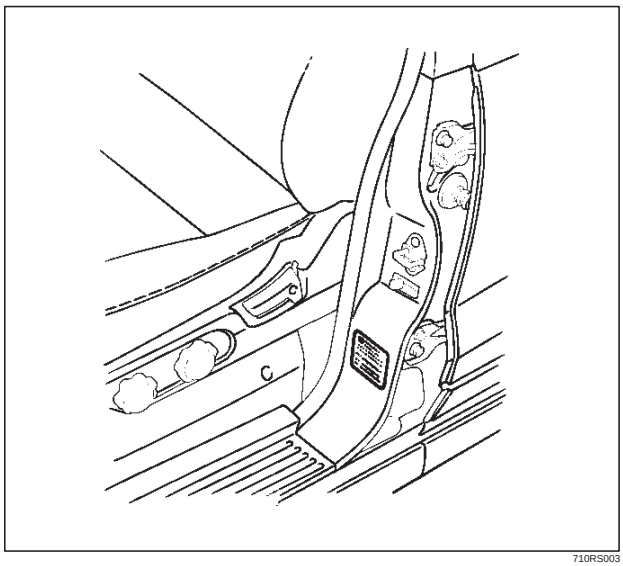

710RS003

Tire pressure, in cold condition (after vehicle has set for three hours or more, and driven less than one mile), should be checked monthly or before any extended trip. Tire pressure increases approximately 15% when the tires become hot during driving. Tire pressure specification is shown on the label located on the left door lock pillar.

NOTE: Check the tire pressure whenever irregular wear is found. Tire inflation greatly affects tire wear. If the alignment check does not reveal any alignment problems, check the condition of the shock absorbers and wheel/tire balance.

Diagnosis List

If the following conditions are noted, rotation is required.

1. Front tire wear is different from rear.
2. Uneven wear exists across the tread of any tire.
3. Left and right front tire wear is unequal.
4. Left and right rear tire wear is unequal.

If the following conditions are noted, check the wheel alignment.

1. Left and right front tire wear is unequal.
2. Uneven wear exists across the tread of any tire.
3. Front tire treads have scuffed appearance with “feather” edges on one side of tread ribs or blocks.
4. There is cupping, flat spotting etc.

Higher than recommended pressure can cause:

1. Hard ride.
2. Poor steering stability.
3. Rapid and uneven wear at center of the tread.

Lower than recommended pressure can cause:

1. Tire squeal on turns.
2. Hard steering.
3. Rapid and uneven wear on the edges of the tread.
4. Tire rim bruises and rupture.
5. Tire cord breakage.
6. High tire temperatures.
7. Reduced handling.
8. Reduced fuel economy.

Unequal pressure on same axle can cause:

1. Uneven braking.
2. Steering lead.
3. Reduced handling.
4. Swerve on acceleration.

Radial Tire Waddle

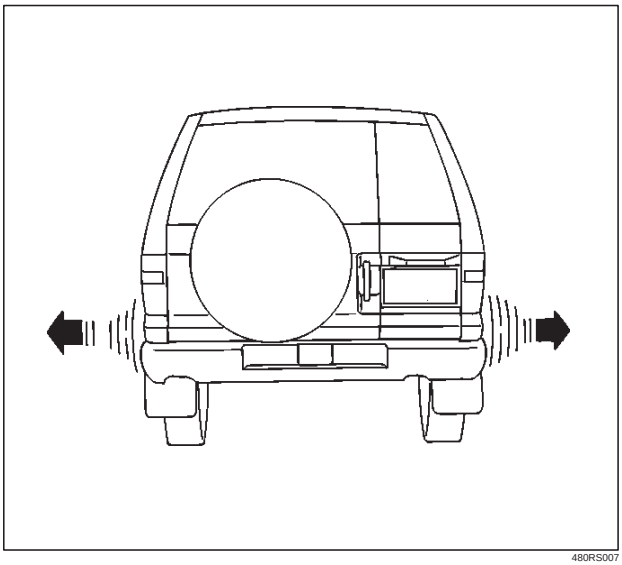

480RS007

Waddle is side-to-side movement at the front and/or rear of the car. It can be caused by the steel belt not being straight within the tire, or by excessive lateral runout of the tire or wheel. It is most noticeable at low speed, about 8 to 48 km/h (5 to 30 mph). It may also cause rough ride at 80 to 113 km/h (50 to 70 mph).

The car can be road tested to see which end of the car has the faulty tire. If the tire causing the waddle is on the rear, the rear end of the car will “waddle”. From the driver’s seat, it feels as if someone is pushing on the side of the car.

If the faulty tire is on the front, the waddle is more easily seen. The front sheet metal appears to be moving back and forth. It feels as if the driver’s seat is the pivot point in the car.

Another more time-consuming method of determining the faulty tire is substituting tire and wheel assemblies that are known to be good. Follow these steps:

1. Drive the car to determine if the waddle is coming from the front or rear.
2. Install tire and wheel assemblies known to be good (from a similar car) in place of those on the end of the car which is waddling. If the waddle cannot be isolated to front or rear, start with the rear tires.
3. Road test again. If improvement is noted, install the original tire and wheel assemblies one at a time until the faulty tire is found. If no improvement is noted, install tires known to be good in place of all four. Then, install the originals one at a time until the faulty tire is found.

Downloaded from www.Manualslib.com manuals search engine

Radial Tire Lead/Pull

“Lead/Pull” is vehicle deviation from a straight path, on a level road with no pressure on the steering wheel.
Lead is usually caused by:

1. Poorly manufactured radial tires.
2. Uneven brake adjustment.
3. Wheel alignment.

The way in which a tire is built can produce lead in a car. An example of this is placement of the belt. Off-center belts on radial tires can cause the tire to develop a side force while rolling straight down the road and the tire will tend to roll like a cone.
The “Radial Tire Lead/Pull Correction” chart should be used to make sure that front wheel alignment is not mistaken for tire lead.
Rear tires will not cause lead/pull.

Downloaded from www.Manualslib.com manuals search engine

Radial Tire Lead/Pull Correction Chart

Step	Action	Yes	No
1	1. Inflate tires to recommended pressure. 2. Road test vehicle on level uncrowned road. Was a problem corrected?	End	Go to Step 2
2	Switch front tires side to side and road test again. Was a problem corrected?	If roughness results,replace tires	Go to Step 3
3	Did the vehicle lead in same direction?	Go to Step 4	Go to Step 5
4	Put tires back in original position and check alignment. Was a problem corrected?	End	Go to Step 5
5	Install known good tire on one front side. Was a problem corrected?	Replace tire	Install a known good tire in place of other front tire. If lead corrected, replace tire

Typical examples of abnormal tire ahead wear and major causes:

CAUTION: Similar wear patterns can be caused by worn suspension parts, misalignment of wheels and tires, and other suspension related problems.

Spotty wear – wear localized on shoulder sections, and in an extreme cases, the tire becomes polygonal in shape.

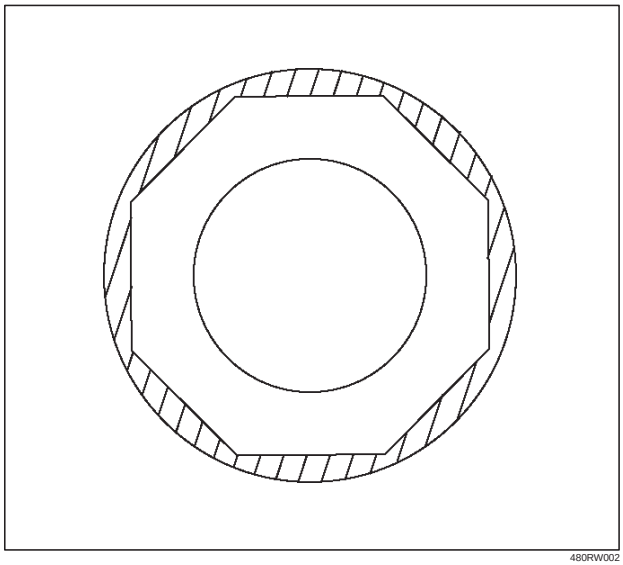

480RW002

1. Tire or wheel out of round or distorted.
2. Hub or knuckle out of round or distorted.
3. Play in hub bearings or ball joint.
4. Rotating parts out of balance.

Tread wear one-sided.

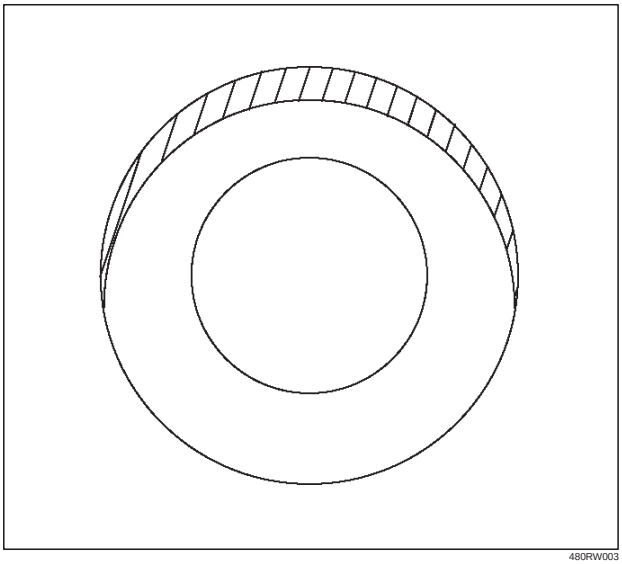

480RW003

1. Rotating parts out of balance.
2. Tire or wheel out of round.
3. Hub or knuckle out of round or distorted.

Downloaded from www.Manualslib.com manuals search engine

Localized tread wear.

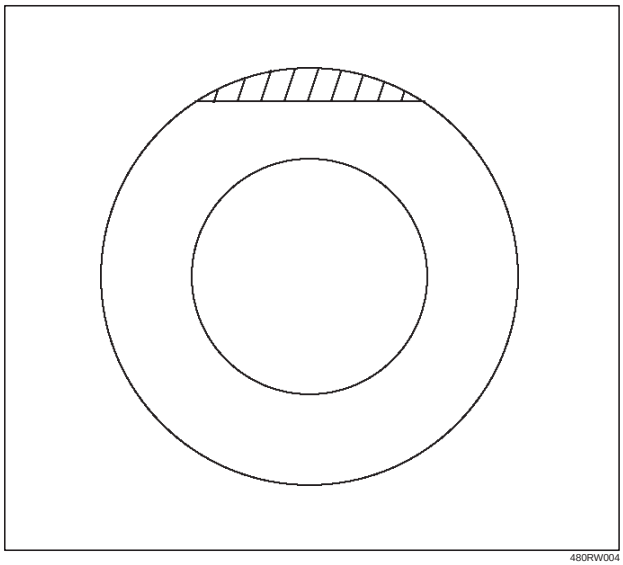

480RW004

1. Once spotty wear develops in tread due to hard braking or abrupt starting, localized wear tends to be promoted.

Shoulder wear (generally wear develops in outer shoulder):

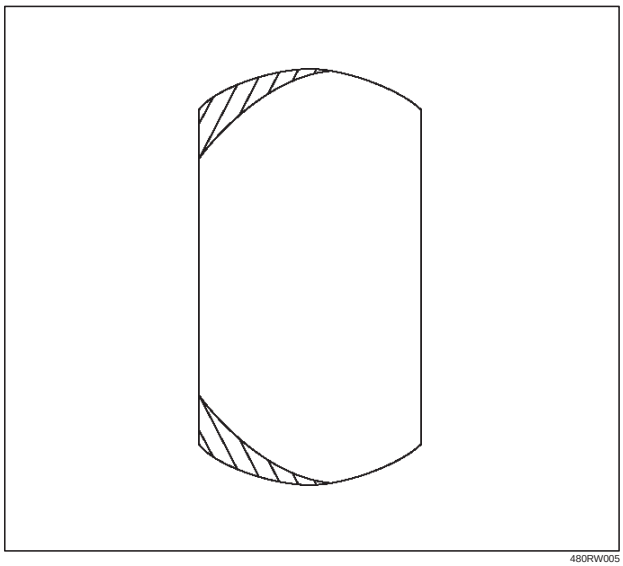

480RW005

1. Camber or toe-in incorrect.
2. Shoulder wear caused by repeated hard-cornering.

Wear in shoulders at points opposed to each other.

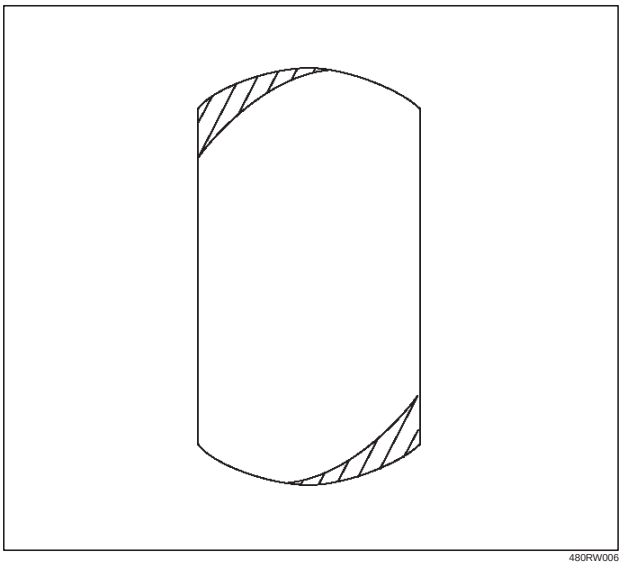

480RW006

1. Tire or wheel out of round or distorted.
2. Play in bearings or ball joint.

Premature wear in shoulders.

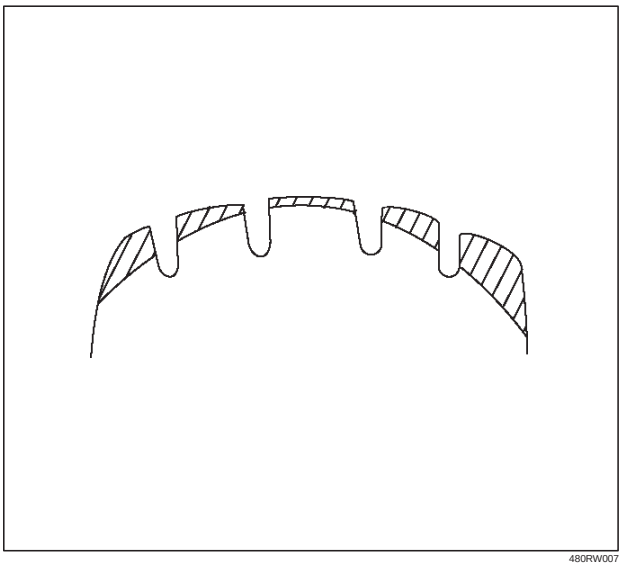

480RW007

1. Flexing of tire excessive due to under-inflation.

Downloaded from www.Manualslib.com manuals search engine

One sided feather edging.

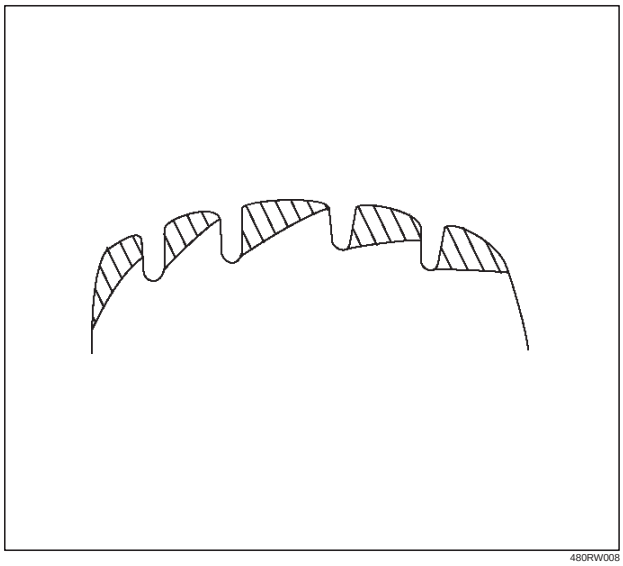

1. Wear caused by repeated hard-cornering.
2. Camber or toe-in incorrect.

Downloaded from www.Manualslib.com manuals search engine

Wheel

Wheel and Associated Parts

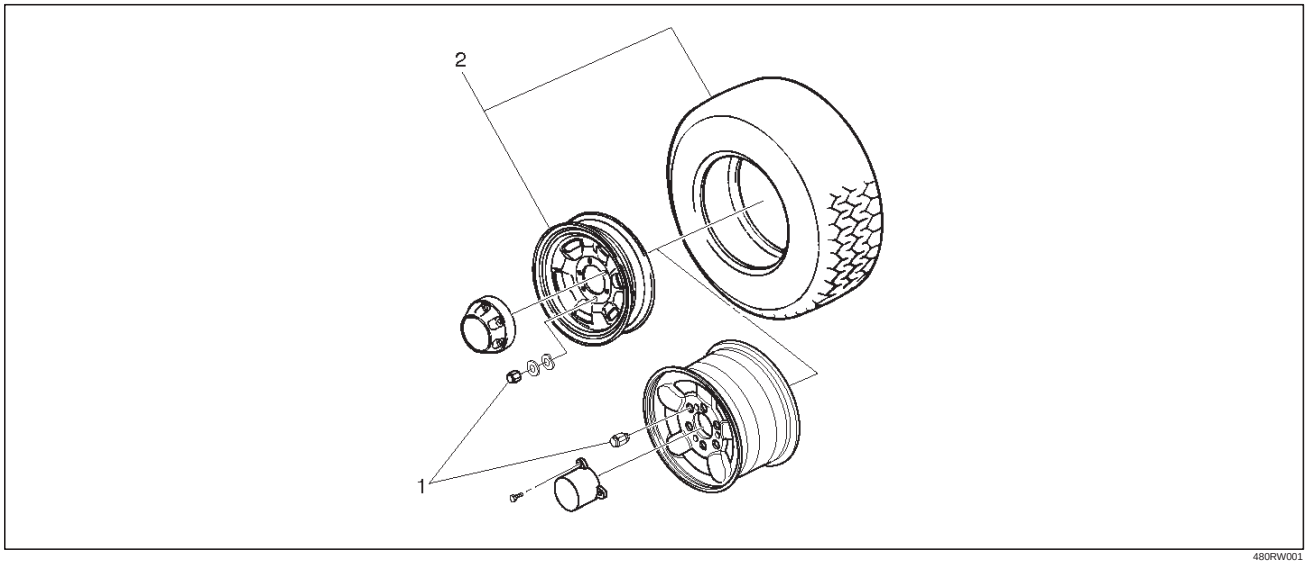

480RW001

Legend

(1) Wheel Lug Nut
(2) Wheel and Tire

Removal

1. Loosen wheel lug nut by approximately 180 g (half a rotation), then raise the vehicle and remove the nuts.
2. Remove wheel and tire.

NOTE: Never use heat to loosen a tight wheel lug nut. The application of heat to the hub can shorten the life of the wheel and may cause damage to wheel bearings.

Installation

1. Install wheel and tire.
2. Install wheel lug nut, and lower the vehicle. Tighten the wheel lug nuts to the specified torque in numerical order.

Torque: 118 N·m (87 lb ft)

CAUTION: Before installing wheels, remove any build-up of corrosion on the wheel mounting surface and brake disc mounting surface by scraping and wire brushing. Installing wheels without good metal-to-metal contact at mounting surfaces can cause wheel nuts to loosen, which can later allow a wheel to come off while the vehicle is moving.

NOTE: Valve caps should be on the valve stems to keep dust and water out.

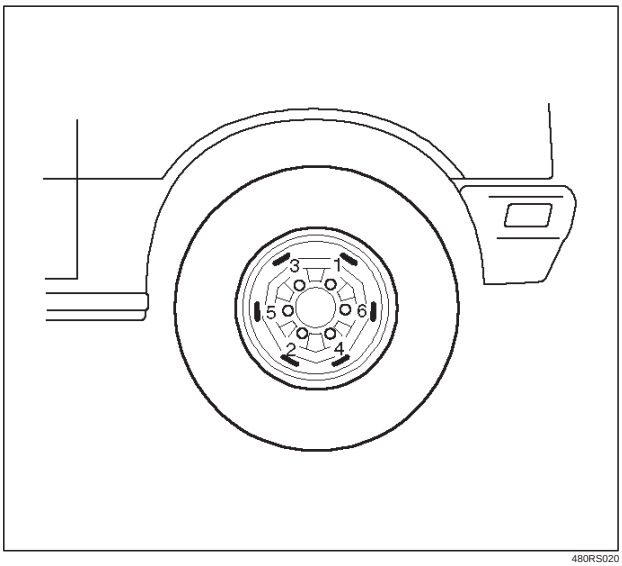

480RS020

Downloaded from www.Manualslib.com manuals search engine

Tire

Tire Replacement

When replacement is necessary, the original metric the size should be used. Most metric tire sizes do not have exact corresponding alphanumeric tire sizes. It is recommended that new tires be installed in pairs on the same axle. If necessary to replace only one tire, it should be paired with tire having the most tread, to equalize braking traction.

CAUTION: Do not mix different types of tires such as radial, bias and bias-belted tires except in emergencies, because vehicle handling may be seriously affected and may result in loss of control.

Tire Dismounting

Remove valve cap on valve step and deflate the tire. Then use a tire changing machine to mount or dismount tires. Follow the equipment manufacturer's instruction. Do not use hand tools or tire lever alone to change tires as they may damage the tire beads or wheel rim.

Tire Mounting

Rim bead seats should be cleaned with a wire brush or coarse steel wool to remove lubricants, and light rust. Before mounting a tire, the bead area should be well lubricated with an approved tire lubricant.
After mounting, inflate the tire to 196kPa (28 psi) so that beads are completely seated. Inflate the air to specified pressure and install valve cap to the stem.

WARNING: NEVER STAND OVER TIRE WHEN INFLATING. BEAD MAY BREAK WHEN BEAD SNAPS OVER RIM'S SAFETY HUMP AND CAUSE SERIOUS PERSONAL INJURY.

NEVER EXCEED 240 KPA (35 PSI) PRESSURE WHEN INFLATING. IF 240 KPA (35 PSI) PRESSURE WILL NOT SEAT BEADS, DEFLATE, RE-LUBRICATE AND RE-INFLATE. OVER INFLATION MAY CAUSE THE BEAD TO BREAK AND CAUSE SERIOUS PERSONAL INJURY.

Tire Repair

There are many different materials on the market used to repair tires.
Manufacturers have published detailed instructions on how and when to repair tires. These instructions can be obtained from the tire manufacturer if they are not included with the repair kit.

Wheel Inspection

Damaged wheels and wheels with excessive run-out must be replaced.
Wheel run out at rim (Base on hub Bore):

Steel	Aluminum
1– Vertical play: Less than 1.5 mm (0.059 in)	1– Vertical play: Less than 0.7 mm (0.028 in)
2– Horizontal play: Less than 1.5 mm (0.059 in)	2– Horizontal play: Less than 0.7 mm (0.028 in)

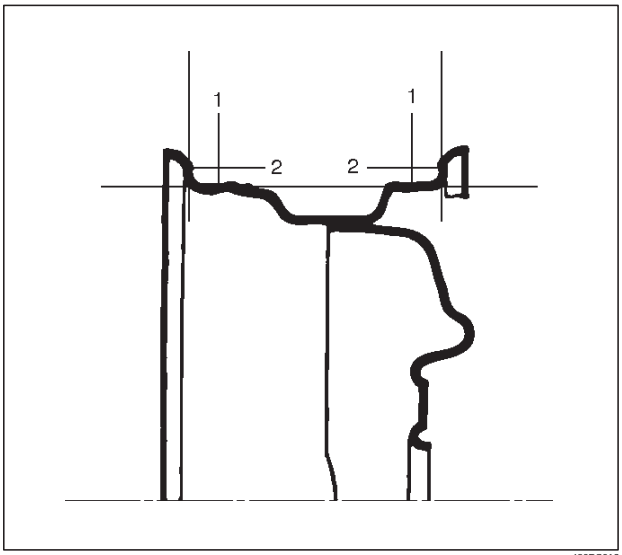

480RS012

General Balance Procedure

Deposits of mud, etc. must be cleaned from the inside of the rim.
The tire should be inspected for the following: match mount paint marks, bent rims, bulges, irregular tire wear, proper wheel size and inflation pressure. Then balance according to the equipment manufacturer's recommendations.
There are two types of wheel and tire balance.
Static balance is the equal distribution of weight around the wheel.
Assemblies that are statically unbalanced cause a bouncing action called tramp. This condition will eventually cause uneven tire wear.

Downloaded from www.Manualslib.com manuals search engine

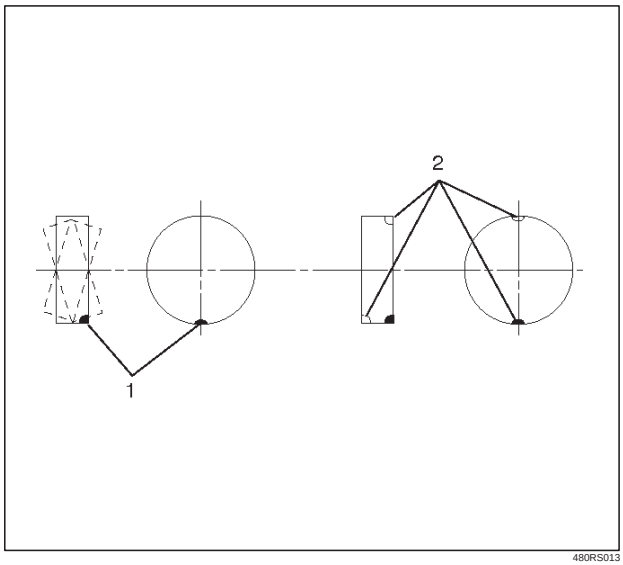

480RS013

Legend

(1) Heavy Spot Wheel Shimmy
(2) Add Balance Weights Here

Dynamic balance is the equal distribution of weight on each side of the wheel center-line so that when the tire spins there is no tendency for the assembly to move from side to side. Assemblies that are dynamically unbalanced may cause shimmy.

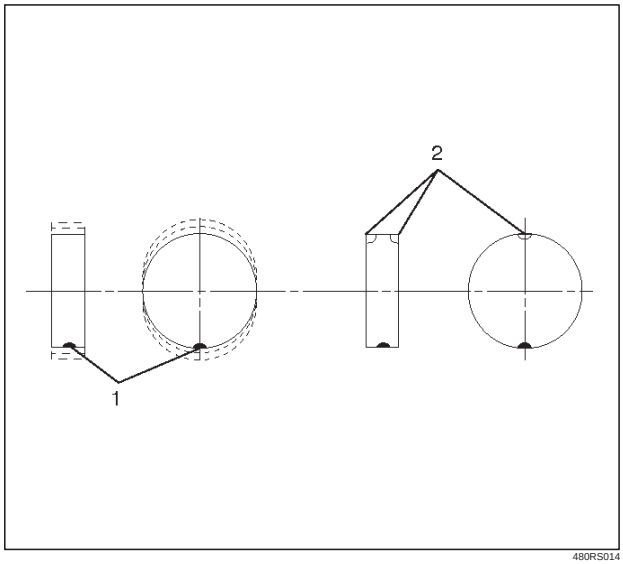

480RS014

Legend

(1) Heavy Spot Wheel Hop
(2) Add Balance Weights Here

WARNING: STONES SHOULD BE REMOVED FROM THE TREAD TO AVOID OPERATOR INJURY DURING SPIN BALANCING AND TO OBTAIN A GOOD BALANCE.

Balancing Wheel and Tire

On-vehicle Balancing

On-Vehicle balancing methods vary with equipment and tool manufacturers. Be sure to follow each manufacturer's instructions during balancing operation.

Off-vehicle Balancing

Most electronic off-vehicle balancers are more accurate than the on-vehicle spin balancers. They are easy to use and give a dynamic balance. Although they do not correct for drum or disc unbalance (as on- vehicle spin balancing does), they are very accurate.

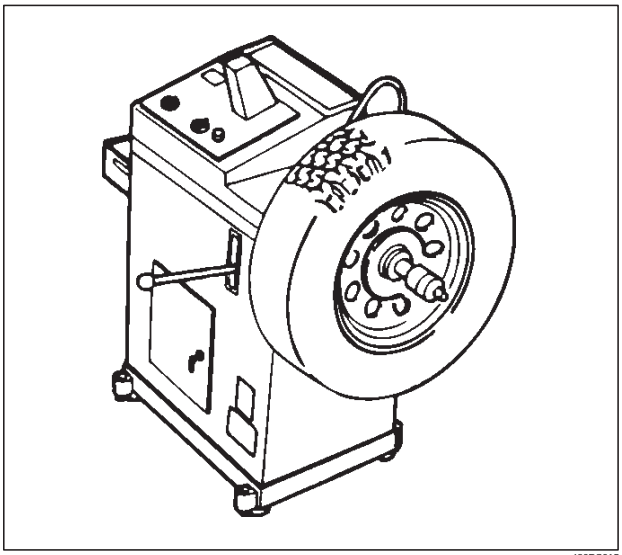

480RS015

Downloaded from www.Manualslib.com manuals search engine

Main Data and Specifications

General Specifications

Wheels	Size	16 x 7JJ
	Offset	38.0 mm (1.50 in)
	P.C.D., wheel studs	139.7 mm (5.50 in)
Standard tire	Size	P245/70R16
	Pressure(Front)	210 kPa (30 psi)
	Pressure(Rear)	240 kPa (35 psi)

Torque Specifications

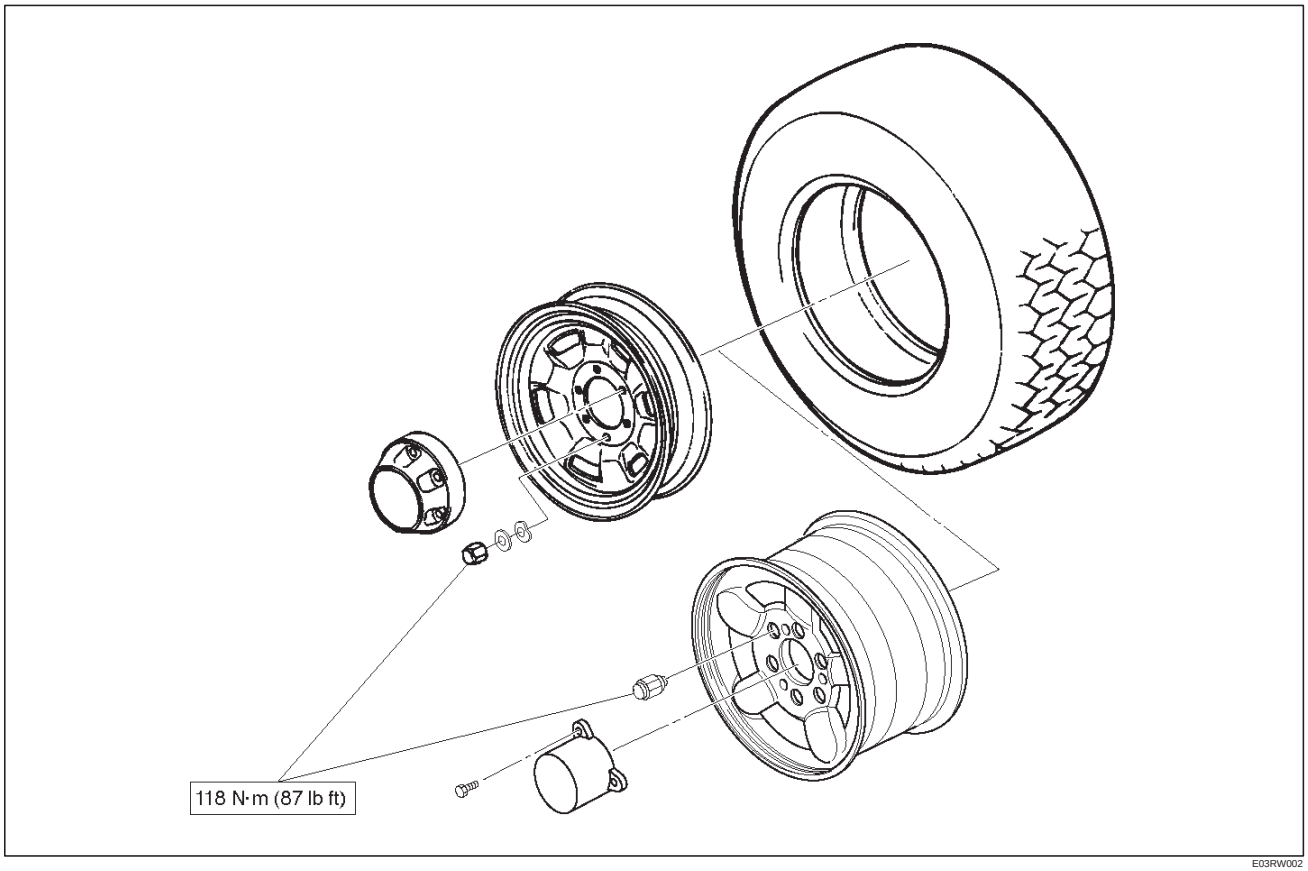

E03RW002

Downloaded from www.Manualslib.com manuals search engine

TROOPER

DRIVELINE/AXLE

CONTENTS

Differential (Front) 4A1
Differential (Rear) 4A2

DIFFERENTIAL (FRONT)

CONTENTS

Service Precaution 4A1–1
Front Drive Axle 4A1–2
Diagnosis 4A1–2
Pinion Shaft Oil Seal 4A1–3
Pinion Shaft Oil Seal and Associated Parts 4A1–3
Removal 4A1–3
Inspection and Repair 4A1–4
Installation 4A1–4
Front Drive Axle Assembly 4A1–5
Front Drive Axle Assembly and Associated Parts 4A1–5
Removal 4A1–5
Installation 4A1–7
Differential Assembly 4A1–9
Disassembled View 4A1–9
Disassembly 4A1–9
Reassembly 4A1–12
Differential Cage Assembly 4A1–21
Disassembled View 4A1–21
Disassembly 4A1–21
Inspection and Repair 4A1–22
Reassembly 4A1–23
Main Data and Specifications 4A1–25
Special Tools 4A1–27

Service Precaution

WARNING: THIS VEHICLE HAS A SUPPLEMENTAL RESTRAINT SYSTEM(SRS). REFER TO THE SRS COMPONENT AND WIRING LOCATION VIEW IN ORDER TO DETERMINE WHETHER YOU ARE PERFORMING SERVICE ON OR NEAR THE SRS COMPONENTS OR THE SRS WIRING. WHEN YOU ARE REFORMING SERVICE ON OR NEAR THE SRS COMPONENTS OR THE SRS WIRING, REFER TO THE SRS SERVICE INFORMATION. FAILURE TO FOLLOW WARNINGS COULD RESULT IN POSSIBLE AIR BAG DEPLOYMENT, PERSONAL INJURY, OR OTHERWISE UNNEEDED SRS SYSTEM REPAIRS.

CAUTION: Always use the correct fastener in the proper location. When you replace a fastener, use ONLY the exact part number for that application. ISUZU will call out those fasteners that require a replacement after removal. ISUZU will also call out the fasteners that require thread lockers or thread sealant. UNLESS OTHERWISE SPECIFIED , do not use supplemental coatings (Paints, greases, or other corrosion inhibitors) on threaded fasteners or fastener joint interfaces. Generally,such coatings adversely affect the fastener torque and the joint clamping force, and may damage the fastener. When you install fasteners, use the correct tightening sequence and specification. Following these instructions can help you avoid damage to parts and systems.

Downloaded from www.Manualslib.com manuals search engine

Front Drive Axle

Diagnosis

Condition	Possible cause	Correction
Oil Leak At Front Axle	Worn or defective oil seal.	Replace the oil seal.
	Front axle housing cracked.	Repair or replace.
Oil Leak At Pinion Shaft	Too much gear oil.	Correct the oil level.
	Oil seal worn or defective.	Replace the oil seal.
	Pinion flange loose or damaged.	Tighten or replace.
Noises In Front Axle Drive Shaft Joint	Broken or worn drive shaft joints and bellows (BJ and DOJ).	Replace the drive shaft joints and bellows.
“Clank” When Accelerating From “Coast”	Loose drive shaft joint to output shaft bolts.	Tighten.
	Damaged inner drive shaft joint.	Replace.
Shudder or Vibration During Acceleration	Excessive drive shaft joint angle.	Repair.
	Worn or damaged drive shaft joints.	Replace.
	Sticking spider assembly (inner drive shaft joint).	Lubricate or replace.
	Sticking joint assembly (outer drive shaft joint).	Lubricate or replace.
Vibration At Highway Speeds	Out of balance or out of round tires.	Balance or replace.
	Front end out of alignment.	Align.
Noises in Front Axle	Insufficient gear oil.	Replenish the gear oil.
	Wrong or poor grade gear oil.	Replace the gear oil.
	Drive pinion to ring gear backlash incorrect.	Adjust the backlash.
	Worn or chipped ring gear, pinion gear or side gear.	Replace the ring gear, pinion gear or side gear.
	Pinion shaft bearing worn.	Replace the pinion shaft bearing.
	Wheel bearing worn.	Replace the wheel bearing.
	Differential bearing loose or worn.	Tighten or replace.
Wanders and Pulls	Wheel bearing preload too tight.	Adjust the wheel bearing preload.
	Incorrect front alignment.	Adjust the front alignment.
	Steering linkage loose or worn.	Tighten or replace.
	Steering gear out of adjustment.	Adjust or replace the steering gear.
	Tire worn or improperly inflated.	Adjust the inflation or replace.
	Front or rear suspension parts loose or broken.	Tighten or replace.
Front Wheel Shimmy	Wheel bearing worn or improperly adjusted.	Adjust or replace.
	Incorrect front alignment.	Adjust the front alignment.
	Worn ball joint or bush.	Replace the ball joint or bush.
	Steering linkage loose or worn.	Tighten or replace.
	Steering gear out of adjustment.	Tighten or replace.
	Tire worn or improperly inflated.	Replace or adjust the inflation.
	Shock absorber worn.	Replace the shock absorber.

Downloaded from www.Manualslib.com manuals search engine

Pinion Shaft Oil Seal

Pinion Shaft Oil Seal and Associated Parts

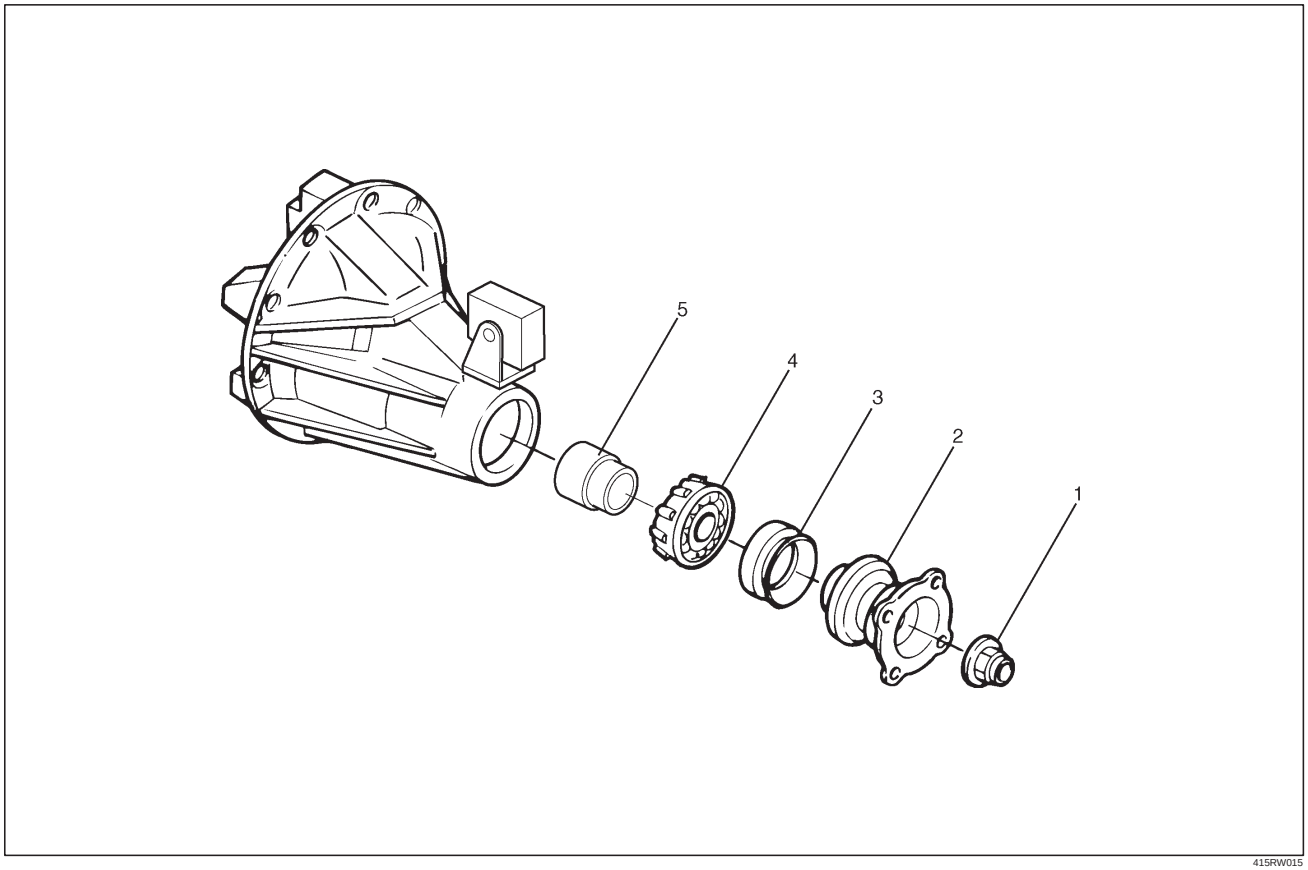

415RW015

Legend

(1) Flange Nut
(2) Flange
(3) Oil Seal
(4) Outer Bearing
(5) Collapsible Spacer

Removal

1. Raise the vehicle and support it at the frame.
   The hoist must remain under the front axle housing.
2. Drain the front axle oil by loosening the drain plug(1).

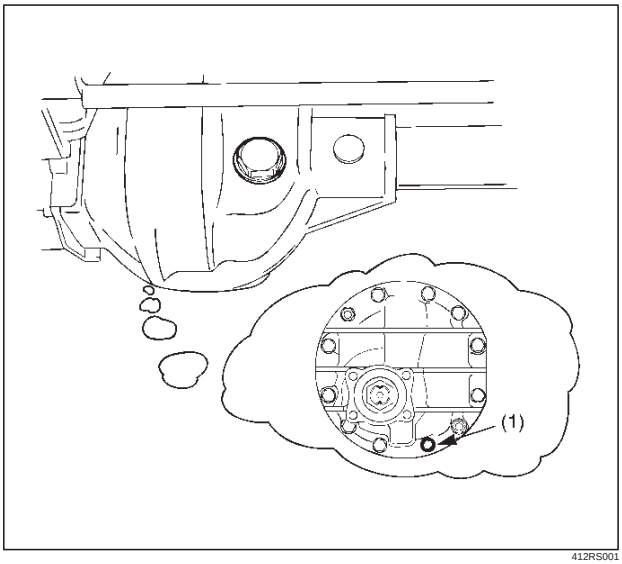

412RS001

Downloaded from www.Manualslib.com manuals search engine

3. Remove the front propeller shaft. Refer to Front Propeller Shaft in this section.
4. Remove flange nut by using pinion flange holder J–37221.

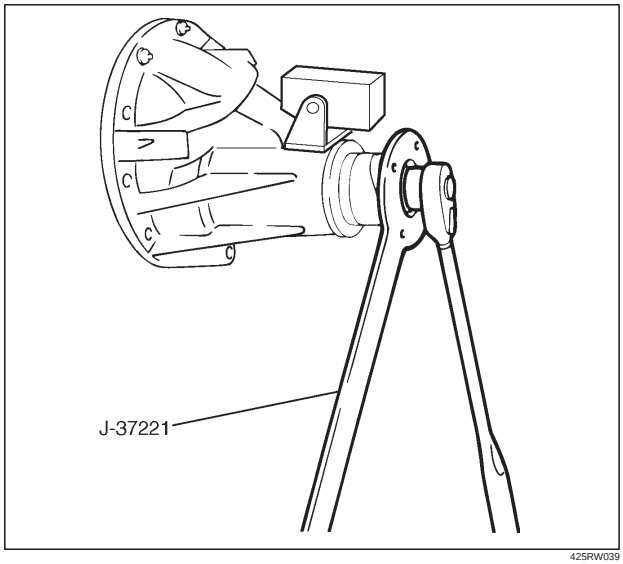

425RW039

5. Remove flange.
6. Remove oil seal.
7. Remove outer bearing by using remover J–39602.

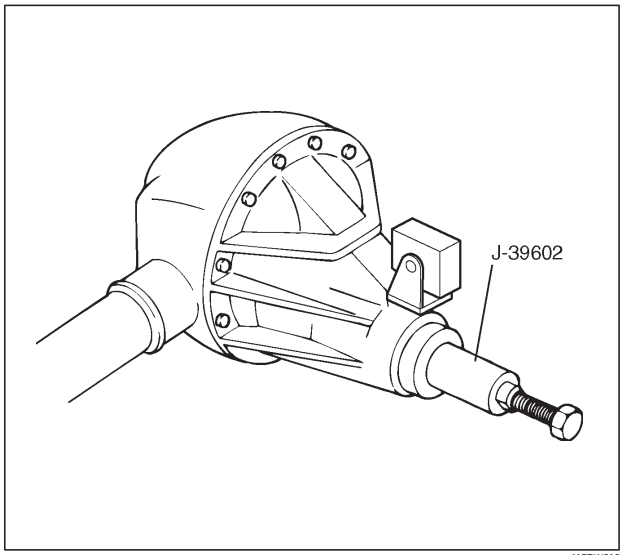

415RW016

8. Remove collapsible spacer.

Inspection and Repair

Make necessary correction or parts replacement if wear, damage, corrosion or any other abnormal conditions are found through inspection.
Check the following parts:

1. Seal surface of the pinion.
2. Cage bore for burns.

Installation

1. Install collapsible spacer. Discard the used collapsible spacer and install a new one.
2. Install outer bearing.

NOTE: Do not drive in, but just temporarily set in the outer bearing by hand, which should be indirectly pressed in finally by tightening the flange nut.

3. Install oil seal, use oil seal installer J–24250 to install a new oil seal that has been soaked in axle lubricant.

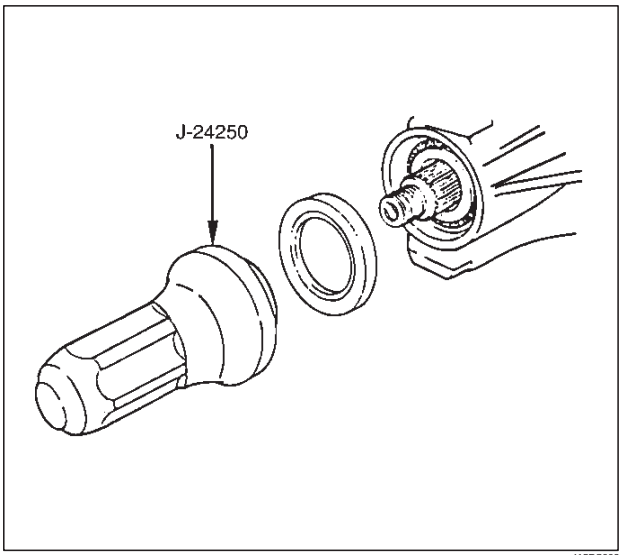

415RS002

4. Install flange.
5. Install flange nut, refer to Differential Assembly Overhaul for flange nut reassembly in this section.

NOTE: Discard the used nut and install a new one.

Downloaded from www.Manualslib.com manuals search engine

Front Drive Axle Assembly

Front Drive Axle Assembly and Associated Parts

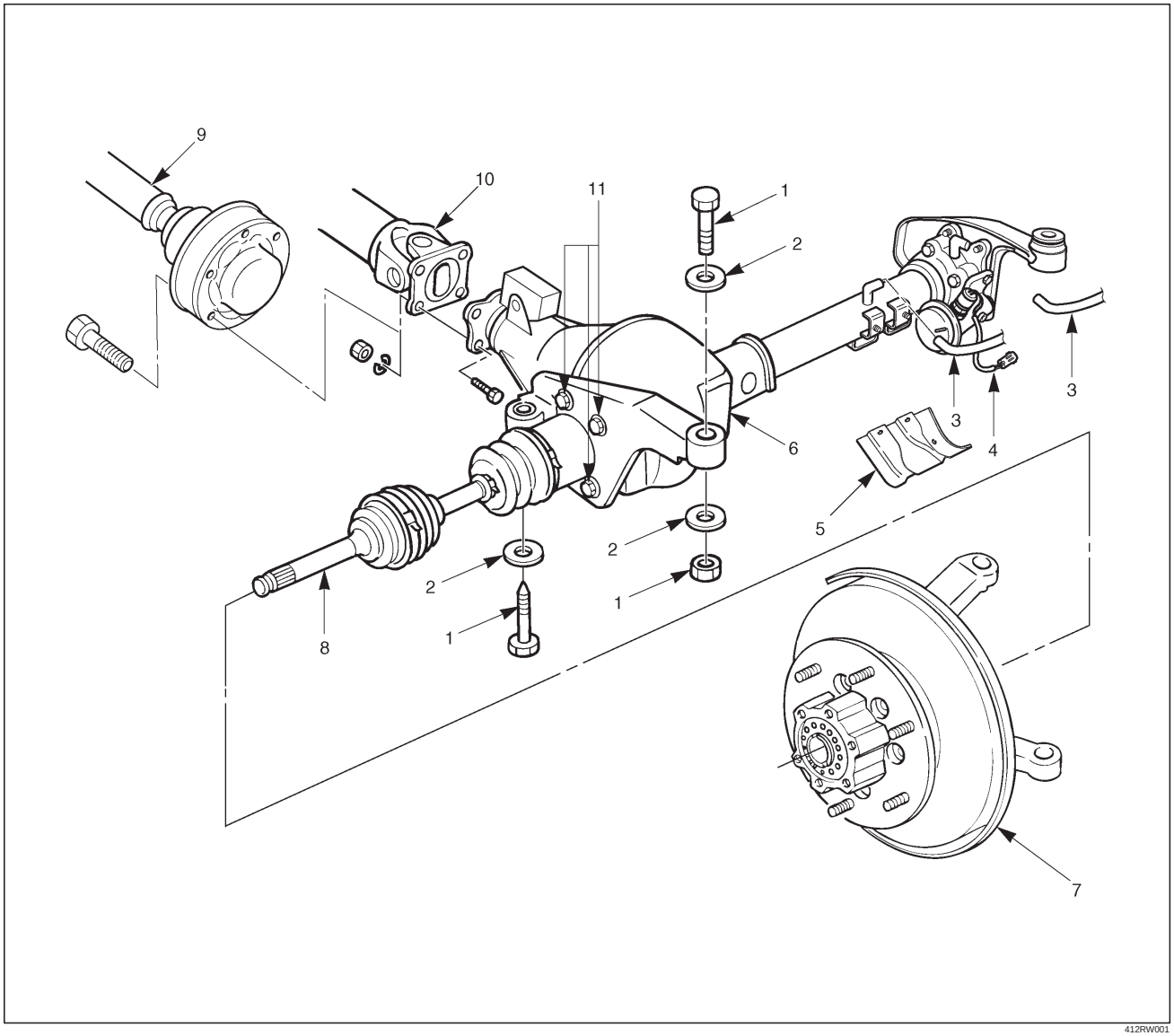

Legend

(1) Mounting Bolt and Nut
(2) Washer and Spacer
(3) Breather Hose
(4) Shift Switch Connector
(5) Protector
(6) Front Axle Case Assembly and Front Drive Shaft Assembly (LH side)
(7) Hub Assembly (Disc, Back Plate and Knuckle)
(8) Front Drive Shaft Assembly (RH side)
(9) Propeller Shaft (with TOD)
(10) Propeller Shaft
(11) Bolt

Removal

1. Jack up the vehicle and support it using jack stands.
2. Remove the tire and wheel.

Downloaded from www.Manualslib.com manuals search engine

3. Remove the drain bolt to drain differential oil.

NOTE:

a. During the work, be sure that the diff case is supported by the jack.

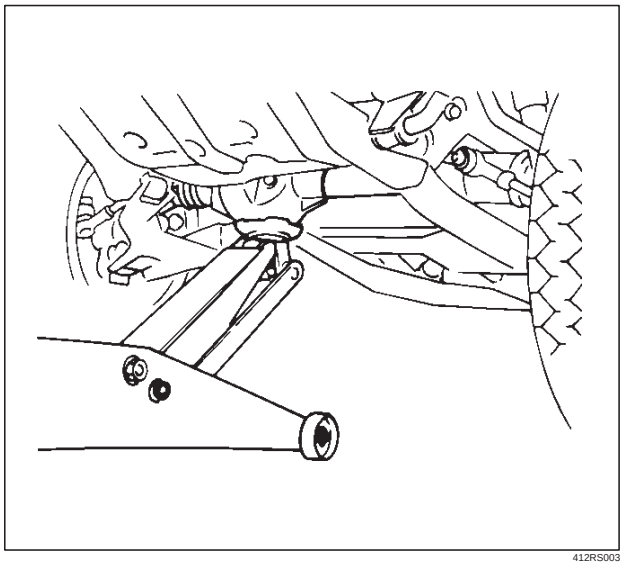

412RS003

b. Remove the brake caliper fixing bolt and hang the caliper. Refer to Disc Brakes in Brake section.

c. Remove the antilock brake system speed sensor. Refer to Front Wheel Speed Sensor in Brake section.

4. Remove the hub assembly (Disc, back plate and knuckle), refer to Front Hub and Disc in this section.
5. Disconnect the knuckle and the suspension arm. Refer to Suspension section.
6. Remove steering link and arm assembly, refer to Steering Linkage in Steering section.
7. Remove suspension crossmember.
8. Remove propeller shaft, refer to Front Propeller Shaft in this section.
9. Remove protector.
10. Remove breather hose.
11. Remove the hose clip.
12. Disconnect breather hose from front drive axle tube and disconnect housing.
13. Disconnect vacuum hose from actuator.
14. Disconnect shift switch connector.

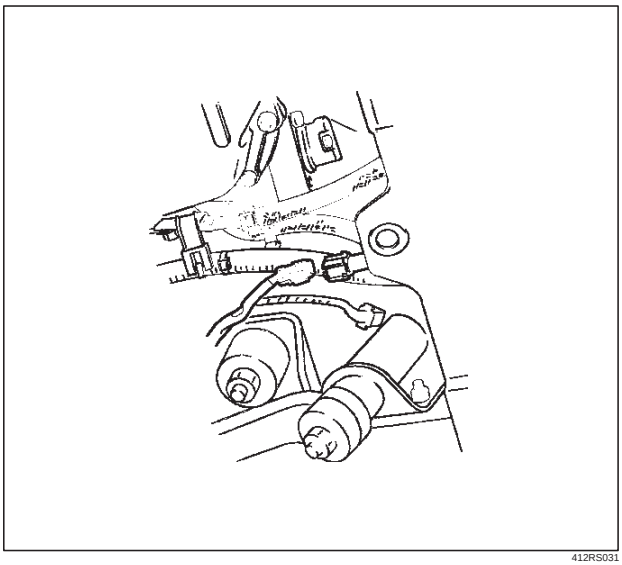

412RS031

15. Remove VSV assembly (1).

NOTE: Be sure not to remove hose and connector from VSV asm.

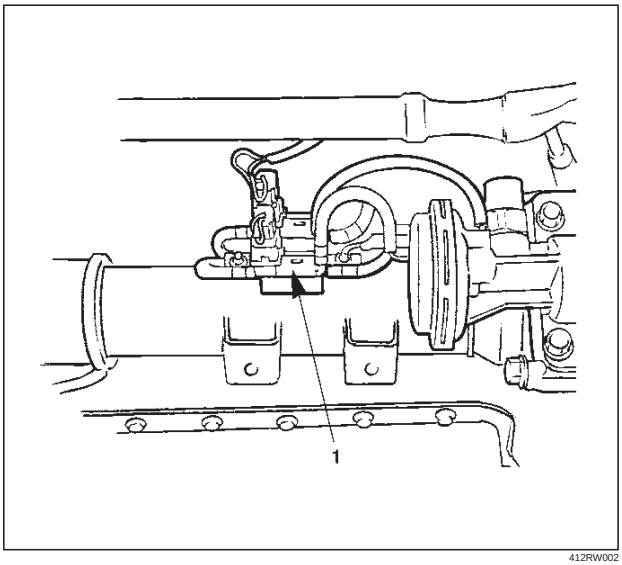

412RW002

Downloaded from www.Manualslib.com manuals search engine

16. Remove mounting bolt and nut.

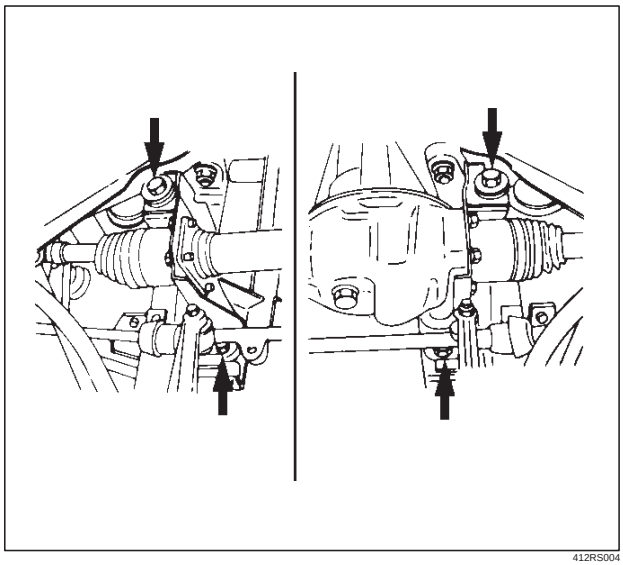

412RS004

17. Remove washer and spacer.
18. Remove the mounting bracket fixing bolt.

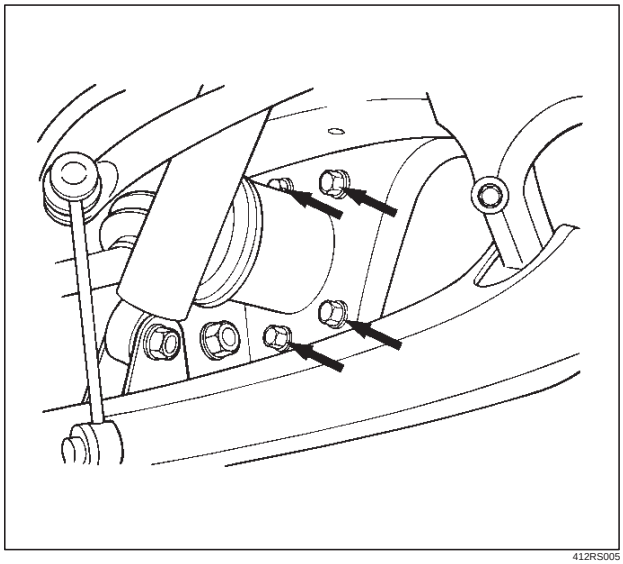

412RS005

19. Lower the vehicle and disconnect the RH front drive shaft assembly, then remove the front axle case assembly and front drive shaft assembly (LH).

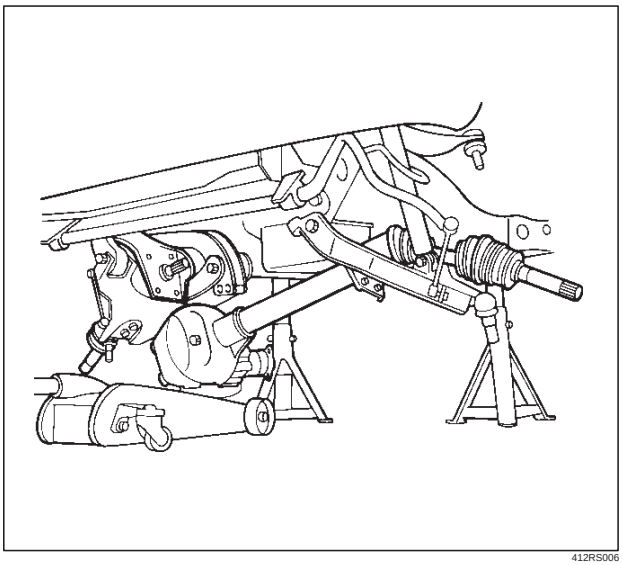

412RS006

20. Remove front drive shaft assembly (RH).

Installation

1. Install front drive shaft assembly (RH) and lay the assembly on the lower arm.
2. Install front axle case assembly and front drive shaft assembly (LH) and place the axle case on the jack, connect to the front drive shaft assembly (RH) before installing to the vehicle.
3. Install bolt and tighten the mounting bracket fixing bolt to the specified torque.

   Torque: 116 N·m (85lb ft)

4. Install washer and spacer.

Downloaded from www.Manualslib.com manuals search engine

5. Tighten the mounting bolt and nut to the specified torque.

   Torque: 152 N·m (112lb ft)

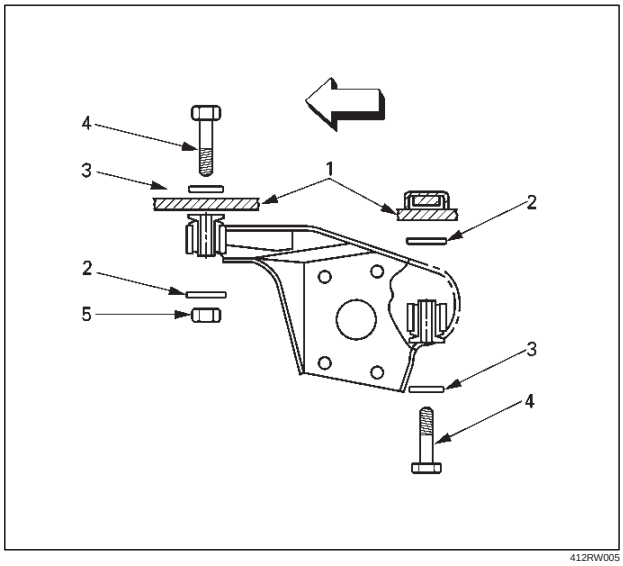

Legend

(1) Frame
(2) Spacer
(3) Washer
(4) Bolt
(5) Nut

6. Install VSV assembly and tighten nuts to specified torque.

   Torque: 8 N·m (69lb in)

7. Install the shift switch connector.

NOTE: Be careful not to permit the entry of dust into the connector.

8. Install the actuator side of vacuum hose.

NOTE: Be careful not to permit the entry of dust into the hose.

9. Connect breather hose and install the hose clip.
10. Install protector and tighten bolts to specified torque.

    Torque: 26 N·m (20lb ft)

11. Install propeller shaft, refer to Front Propeller Shaft in this section.
12. Install suspension crossmember.
13. Steering link and arm assembly, refer to Steering Linkage in Steering section.
14. Install hub assembly (Disc, back plate and knuckle), refer to Front Hub and Disc in this section.

Downloaded from www.Manualslib.com manuals search engine

Differential Assembly

Disassembled View

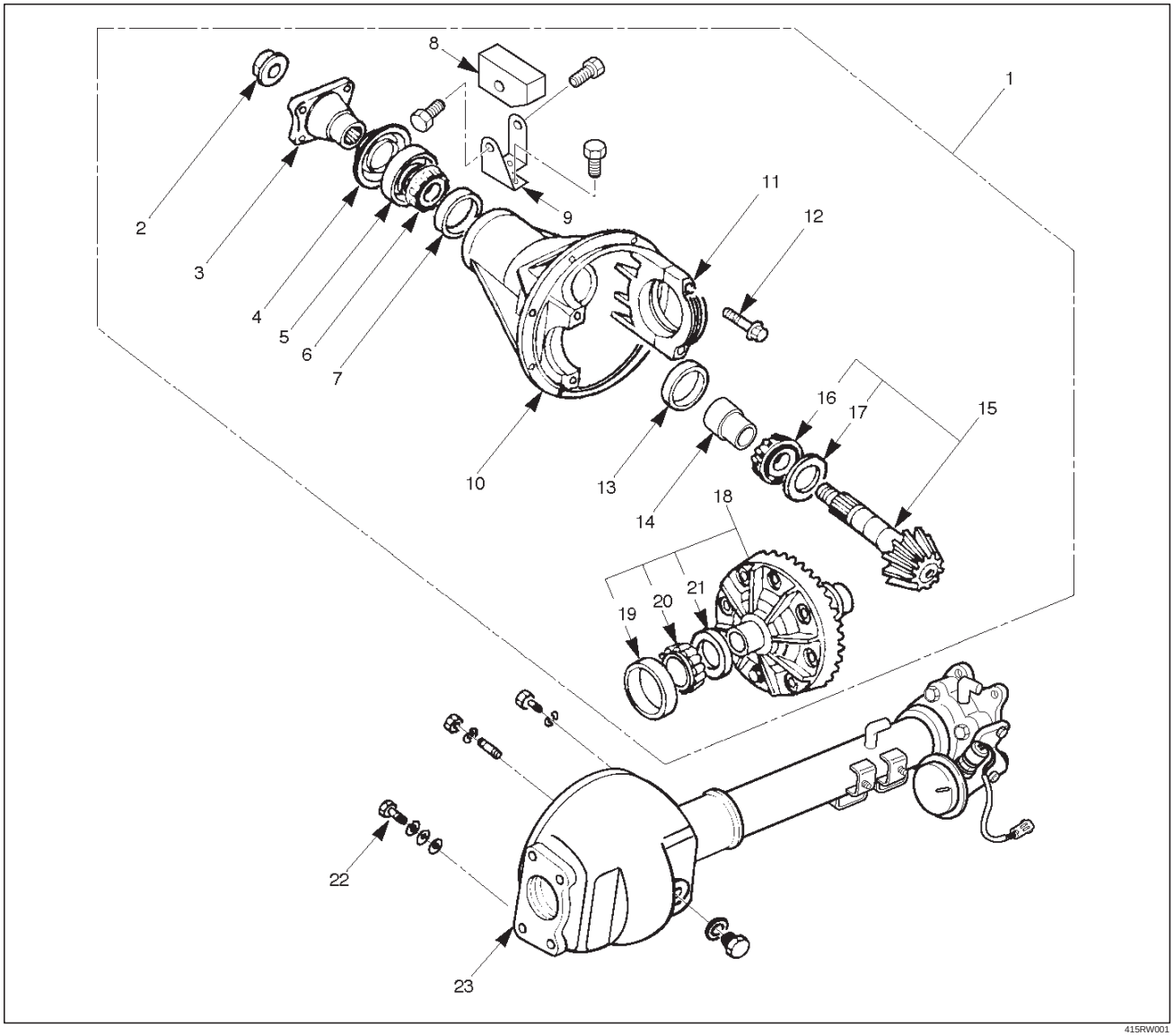

415RW001

Legend

(1) Differential Assembly
(2) Flange Nut
(3) Flange
(4) Dust Cover
(5) Oil Seal
(6) Outer Bearing
(7) Outer Bearing Outer Race
(8) Damper
(9) Bracket
(10) Differential Carrier
(11) Bearing Cap
(12) Bolt
(13) Inner Bearing Outer Race
(14) Collapsible Spacer
(15) Pinion Gear
(16) Inner Bearing
(17) Adjust Shim
(18) Diff Cage Assembly
(19) Side Bearing Outer Race
(20) Side Bearing
(21) Adjust Shim
(22) Bolt
(23) Axle Case

Disassembly

1. Remove differential carrier fixing bolt.
2. Remove differential assembly.

Downloaded from www.Manualslib.com manuals search engine

3. Using holding fixture J–37264 and holding fixture base J–3289–20, fix the differential assembly to the bench.

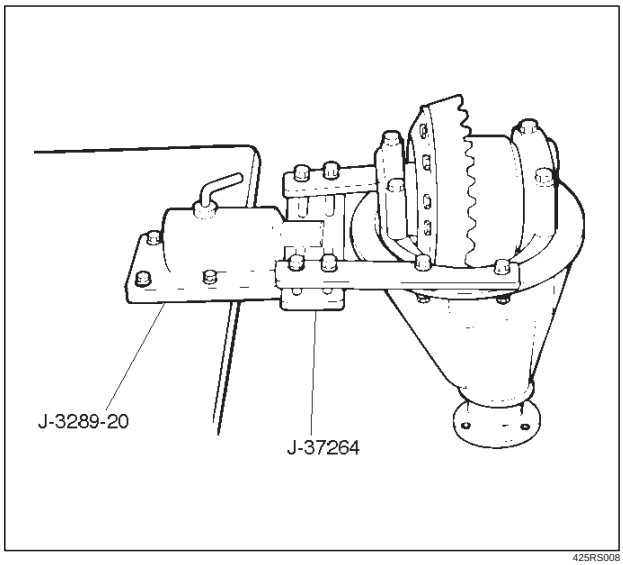

425RS008

4. Remove bearing cap bolt.
5. Apply a setting mark to the side bearing cap and the differential carrier then remove bearing cap.

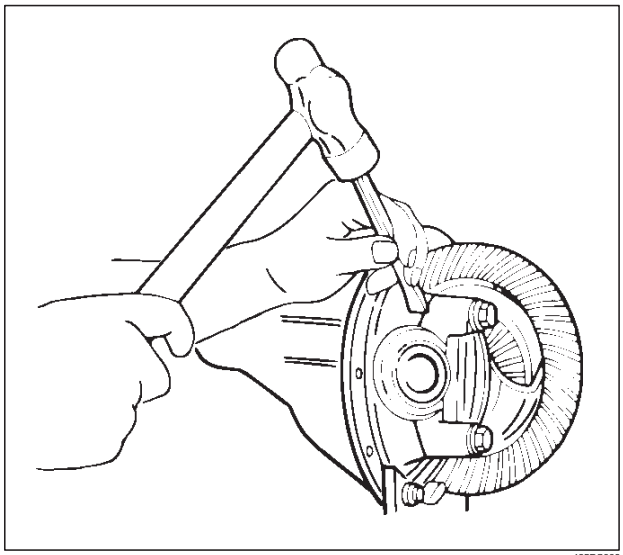

425RS009

6. Remove differential cage assembly.
7. Remove side bearing outer race, after removal, keep the right and left hand side bearing assemblies separate to maintain inner and outer race combinations.
8. Remove side bearing, using remover J–22888 and adapter J–8107–2.

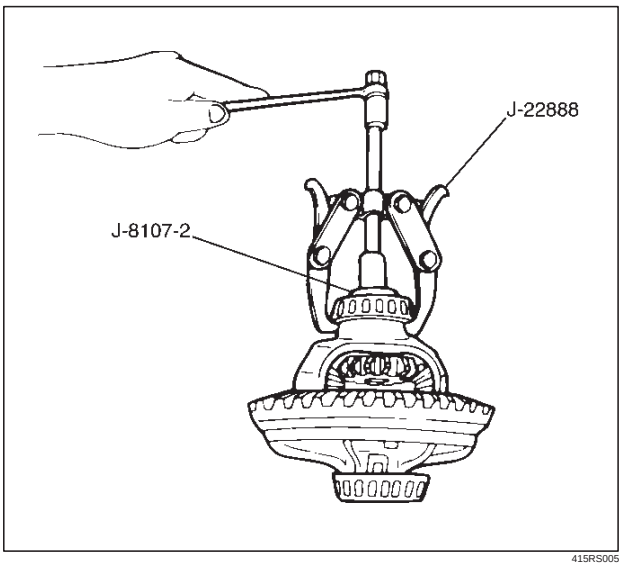

415RS005

9. Remove adjust shim, note the thickness and position of the shims removed.
10. Remove the flange nut using holding wrench J–37221 after raising up its staked parts completely.

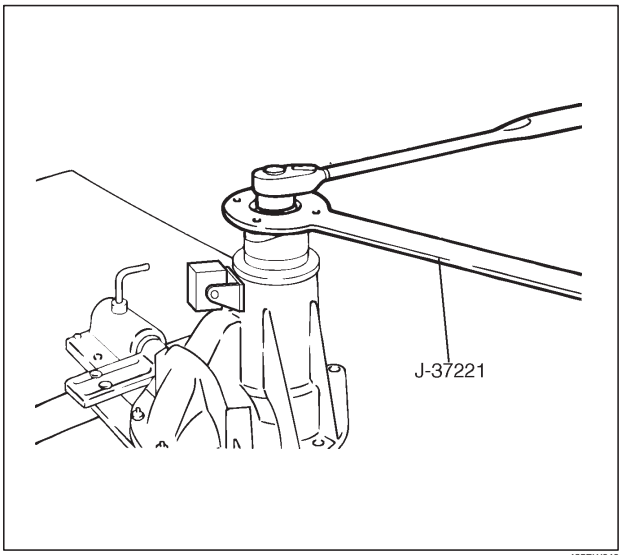

425RW040

11. Remove flange.
12. Remove dust cover.

Downloaded from www.Manualslib.com manuals search engine

13. Remove the drive pinion assembly using a soft metal rod and a hammer.

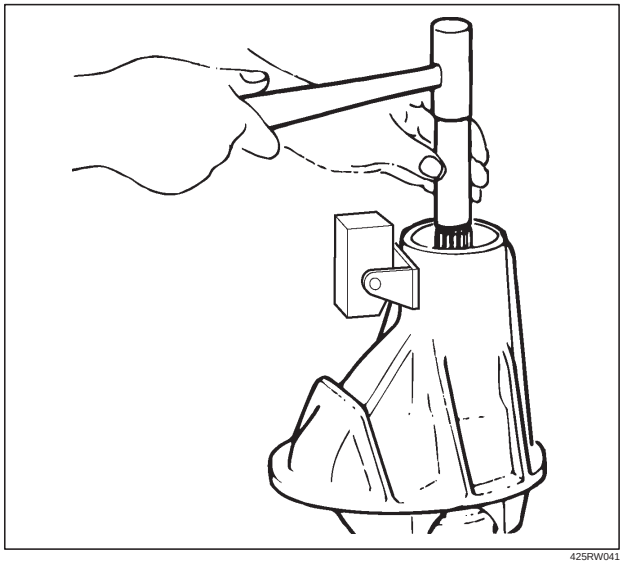

425RW041

14. Remove collapsible spacer.
15. Remove the inner bearing using a separator J–22912–01 and a press.

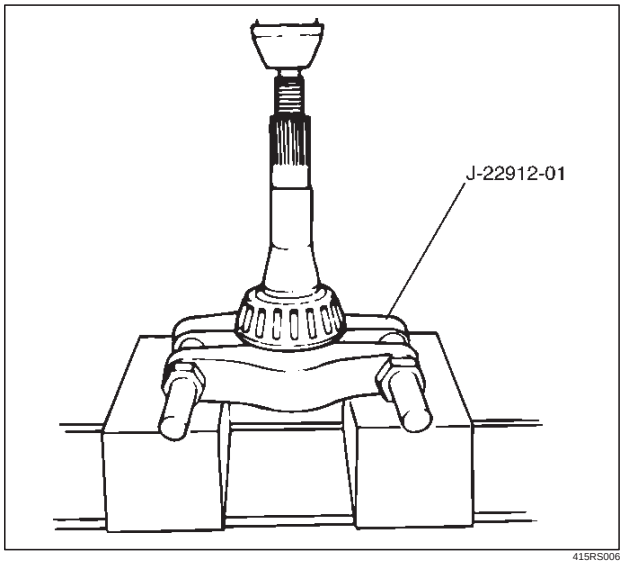

415RS006

16. Remove adjust shim.
17. Remove inner bearing outer race.
18. Remove oil seal.
19. Remove outer bearing.
20. Remove the inner bearing outer race (1) and the outer bearing outer race (2) by using a brass bar and a hammer.

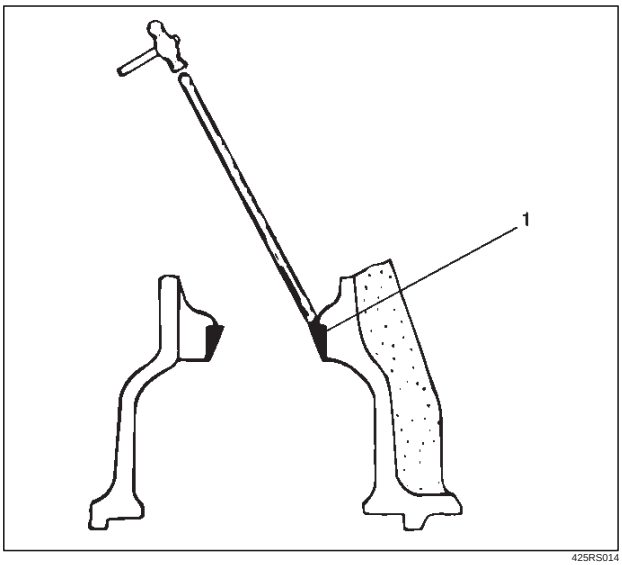

425RS014

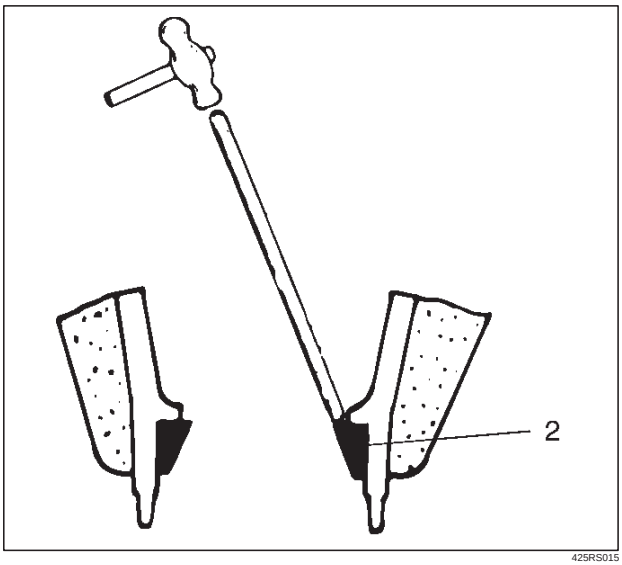

425RS015

Downloaded from www.Manualslib.com manuals search engine

21. Remove damper and bracket.

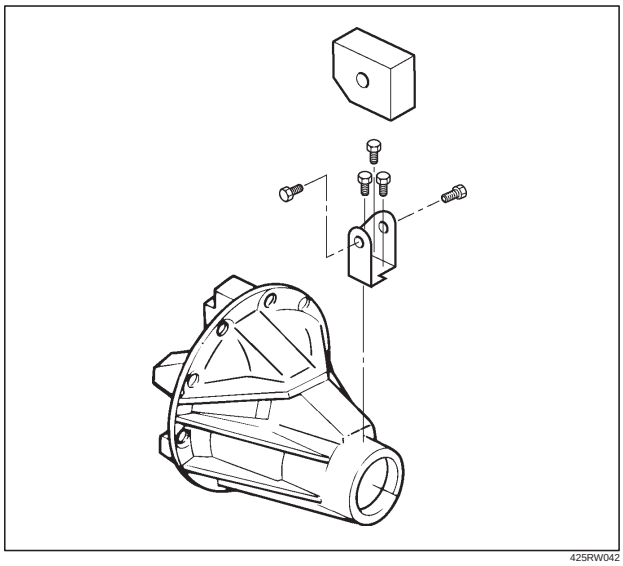

425RW042

Reassembly

1. Using installer J–24256 and grip J–8092, install outer bearing outer race.

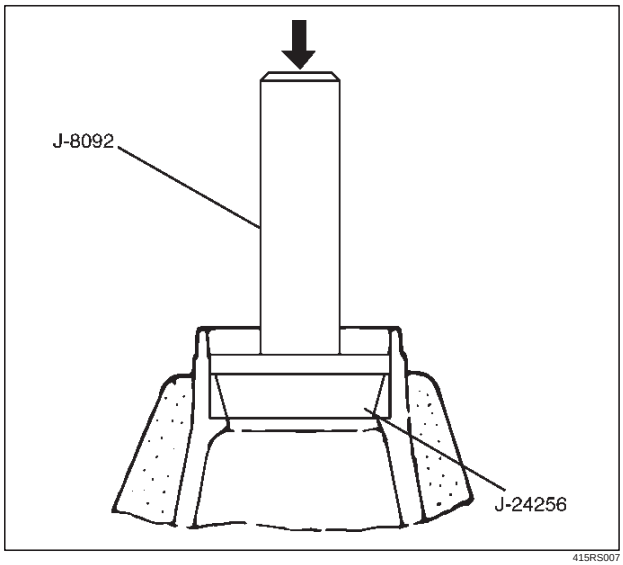

415RS007

2. Using installer J–24252 and grip J–8092, install Inner bearing outer race.

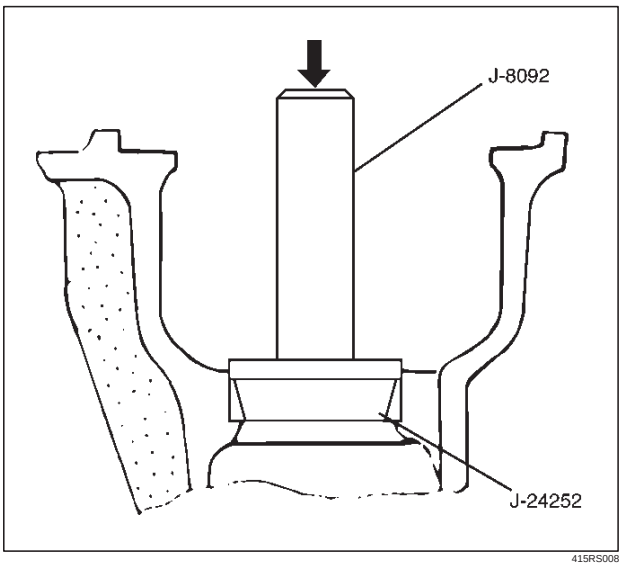

415RS008

3. Install adjust shim and adjust drive pinion mounting distance
   1. Apply gear oil to the inner and outer drive pinion bearing.
      Clean the pinion setting gauge set.
      Then install the gauge set together with the inner and outer bearings.
   2. Tighten the nut to the specified torque.

   Torque: 2.3 N·m (20 lb in)

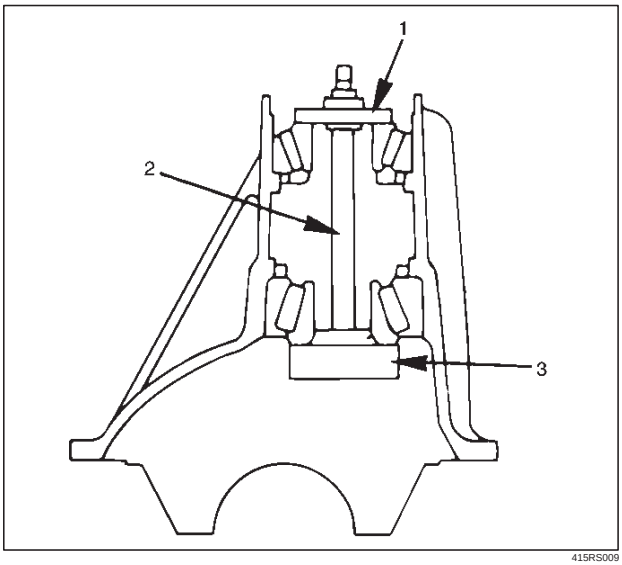

415RS009

Legend

(1) Pilot : J–21777–42
(2) Nut and Bolt : J–23597–9
(3) Gauge Plate : J–23597–7

Downloaded from www.Manualslib.com manuals search engine

3. Clean the side bearing bores. Install the dial indicator with the discs and arbor. Install and tighten the bearing caps to the specified torque.

Torque: 98 N·m (72 lb ft)

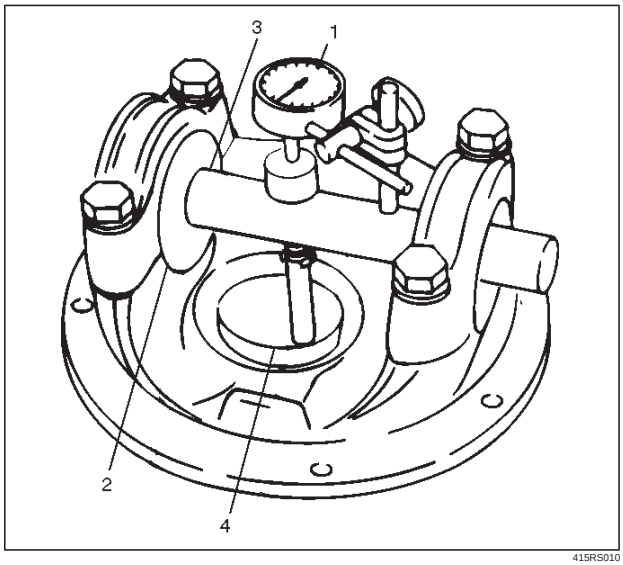

415RS010

Legend

(1) Dial Indicator: J–8001
(2) Disc (2 pcs.): J–23597–8
(3) Arbor: J–23597–1
(4) Gauge Plate: J–23597–42

4. Set the dial indicator to “0”. Place it on the mounting post of the gauging arbor with the contact button touching the indicator pad. Force the dial indicator downward until the needle has made a half turn clockwise. Tighten down the dial indicator in this position.

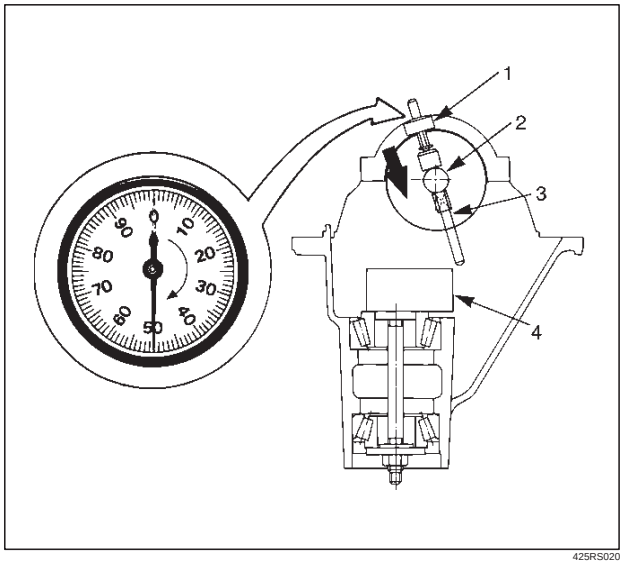

425RS020

Legend

(1) Dial Indicator
(2) Ganging Arbor
(3) Plunger
(4) Gauge Plate

5. Position the plunger on the gauge plate. Move the gauging arbor slowly back and forth and locate the position at which the dial indicator shows the greatest defection. At this point, once again set the dial indicator to “0”.

   Repeat the procedure to verify the “0” setting.

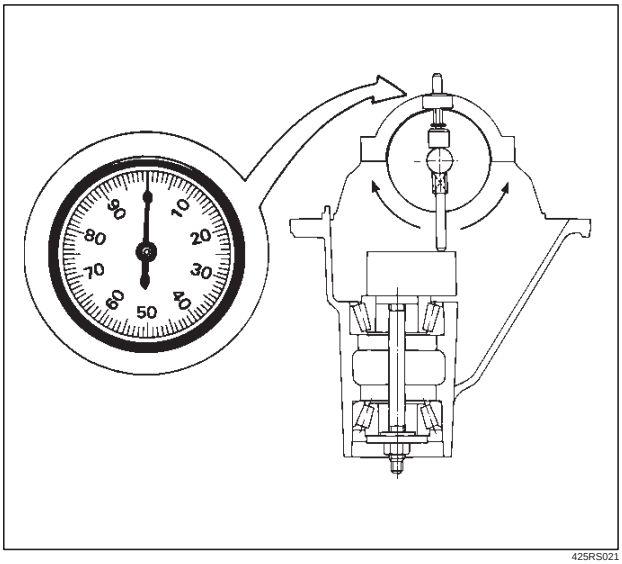

425RS021

6. After the ZERO setting is obtained, rotate the gauging arbor until the dial indicator rod does not touch the gauging plate.

   Record the number the dial indicator needle points to.

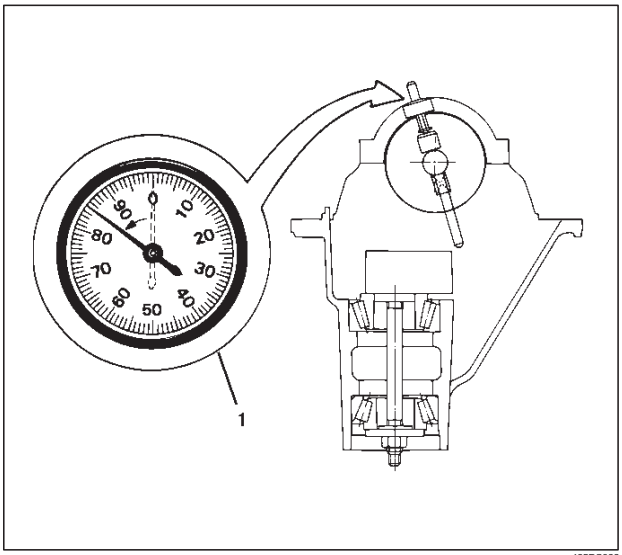

425RS022

Legend

(1) Example=Dial indicator reading of 0.085

Downloaded from www.Manualslib.com manuals search engine

7. Record the pinion depth code on the head of the drive pinion.

   The number indicates a necessary change in the pinion mounting distance. A plus number indicates the need for a greater mounting distance (which can be achieved by decreasing the shim thickness). A minus number indicates the need for a smaller mounting distance (which can be achieved by increasing the shim thickness). If examination reveals pinion depth code “0”, the pinion is “nominal”.

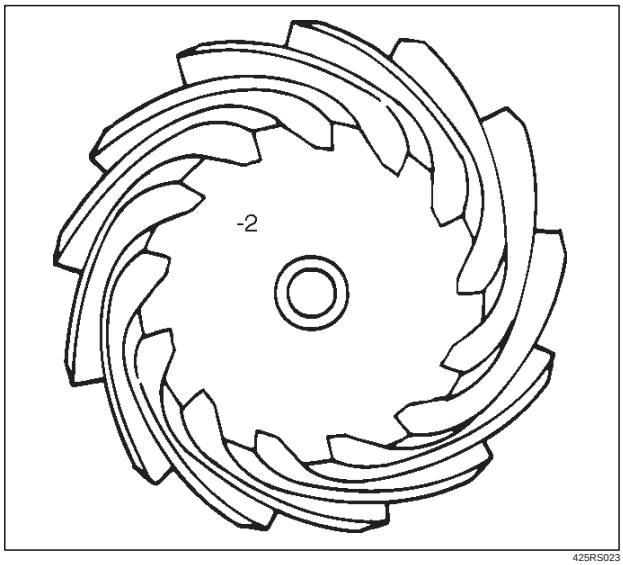

425RS023

Downloaded from www.Manualslib.com manuals search engine

8. Select the shim using the chart;

Pinion marking	+10	+8	+6	+4	+2	0	–2	–4	–6	–8	–10
Dial indicator reading (Inches)	mm (Inches)	mm (Inches)	mm (Inches)	mm (Inches)	mm (Inches)	mm (Inches)	mm (Inches)	mm (Inches)	mm (Inches)	mm (Inches)	mm (Inches)
0.081											2.18 (0.0858)
0.082										2.18 (0.0858)	2.20 (0.0866)
0.083									2.18 (0.0858)	2.20 (0.0866)	2.23 (0.0882)
0.084								2.18 (0.0858)	2.20 (0.0866)	2.24 (0.0882)	2.26 (0.0890)
0.085							2.18 (0.0858)	2.20 (0.0866)	2.24 (0.0882)	2.26 (0.0890)	2.28 (0.0898)
0.086						2.18 (0.0858)	2.20 (0.0866)	2.24 (0.0882)	2.26 (0.0890)	2.28 (0.0898)	2.32 (0.0914)
0.087					2.18 (0.0858)	2.20 (0.0866)	2.24 (0.0882)	2.26 (0.0890)	2.28 (0.0898)	2.32 (0.0914)	2.34 (0.0921)
0.088				2.18 (0.0858)	2.20 (0.0866)	2.24 (0.0882)	2.26 (0.0890)	2.28 (0.0898)	2.32 (0.0914)	2.34 (0.0921)	2.36 (0.0929)
0.089			2.18 (0.0858)	2.20 (0.0866)	2.24 (0.0882)	2.26 (0.0890)	2.28 (0.0898)	2.32 (0.0914)	2.34 (0.0921)	2.36 (0.0929)	2.38 (0.0937)
0.090		2.18 (0.0858)	2.20 (0.0866)	2.24 (0.0882)	2.26 (0.0890)	2.28 (0.0898)	2.32 (0.0914)	2.34 (0.0921)	2.36 (0.0929)	2.38 (0.0937)	2.42 (0.0953)
0.091	2.18 (0.0858)	2.20 (0.0866)	2.24 (0.0882)	2.26 (0.0890)	2.28 (0.0898)	2.32 (0.0914)	2.34 (0.0921)	2.36 (0.0929)	2.38 (0.0937)	2.42 (0.0953)	2.44 (0.0961)
0.092	2.20 (0.0866)	2.24 (0.0882)	2.26 (0.0890)	2.28 (0.0898)	2.32 (0.0914)	2.34 (0.0921)	2.36 (0.0929)	2.38 (0.0937)	2.42 (0.0953)	2.44 (0.0961)	2.46 (0.0969)
0.093	2.24 (0.0882)	2.26 (0.0890)	2.28 (0.0898)	2.32 (0.0914)	2.34 (0.0921)	2.36 (0.0929)	2.38 (0.0937)	2.42 (0.0953)	2.44 (0.0961)	2.46 (0.0969)	2.48 (0.0977)
0.094	2.26 (0.0890)	2.28 (0.0898)	2.32 (0.0914)	2.34 (0.0921)	2.36 (0.0929)	2.38 (0.0937)	2.42 (0.0953)	2.44 (0.0961)	2.46 (0.0969)	2.48 (0.0977)	2.52 (0.0992)
0.095	2.28 (0.0898)	2.32 (0.0914)	2.34 (0.0921)	2.36 (0.0929)	2.38 (0.0937)	2.42 (0.0953)	2.44 (0.0961)	2.46 (0.0969)	2.48 (0.0977)	2.52 (0.0992)	2.54 (0.1000)
0.096	2.32 (0.0914)	2.34 (0.0921)	2.36 (0.0929)	2.38 (0.0937)	2.42 (0.0953)	2.44 (0.0961)	2.46 (0.0969)	2.48 (0.0977)	2.52 (0.0992)	2.54 (0.1000)	2.56 (0.1008)
0.097	2.34 (0.0921)	2.36 (0.0929)	2.38 (0.0937)	2.42 (0.0953)	2.44 (0.0961)	2.46 (0.0969)	2.48 (0.0977)	2.52 (0.0992)	2.54 (0.1000)	2.56 (0.1008)	
0.098	2.36 (0.0929)	2.38 (0.0937)	2.42 (0.0953)	2.44 (0.0961)	2.46 (0.0969)	2.48 (0.0977)	2.52 (0.0992)	2.54 (0.1000)	2.56 (0.1008)		
0.099	2.38 (0.0937)	2.42 (0.0953)	2.44 (0.0961)	2.46 (0.0969)	2.48 (0.0977)	2.52 (0.0992)	2.54 (0.1000)	2.56 (0.1008)			
0	2.42 (0.0953)	2.44 (0.0961)	2.46 (0.0969)	2.48 (0.0977)	2.52 (0.0992)	2.54 (0.1000)	2.56 (0.1008)				
0.001	2.44 (0.0961)	2.46 (0.0969)	2.48 (0.0977)	2.52 (0.0992)	2.54 (0.1000)	2.56 (0.1008)					
0.002	2.46 (0.0969)	2.48 (0.0977)	2.52 (0.0992)	2.54 (0.1000)	2.56 (0.1008)						
0.003	2.48 (0.0977)	2.52 (0.0992)	2.54 (0.1000)	2.56 (0.1008)							
0.004	2.52 (0.0992)	2.54 (0.1000)	2.56 (0.1008)								
0.005	2.54 (0.1000)	2.56 (0.1008)									
0.006	2.56 (0.1008)										

NOTE: When ordering shims, find the part number in the parts catalog by using the thickness of shims listed in the above table.

4. Place the shim on the drive pinion, with the chamfered side turned towards the pinion head then install the inner bearing onto the pinion using an installer J–6133–01 and a press.

Downloaded from www.Manualslib.com manuals search engine

NOTE: Do not apply pressure to the roller cage and apply pressure only to the inner race.

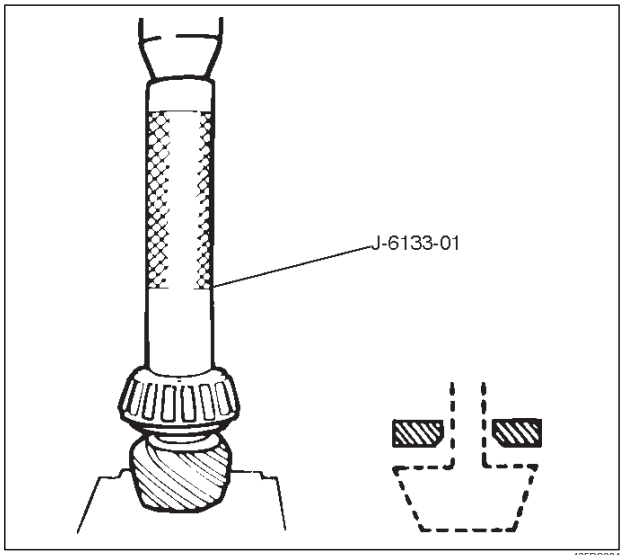

425RS024

5. Discard the used collapsible spacer and install a new one.
6. Install pinion gear.
7. Install outer bearing.
8. Use oil seal installer J–24250 to install a new oil seal that has been soaked in rear axle lubricant.

NOTE: Take care to use a front differential oil seal, NOT the rear differential oil seal.

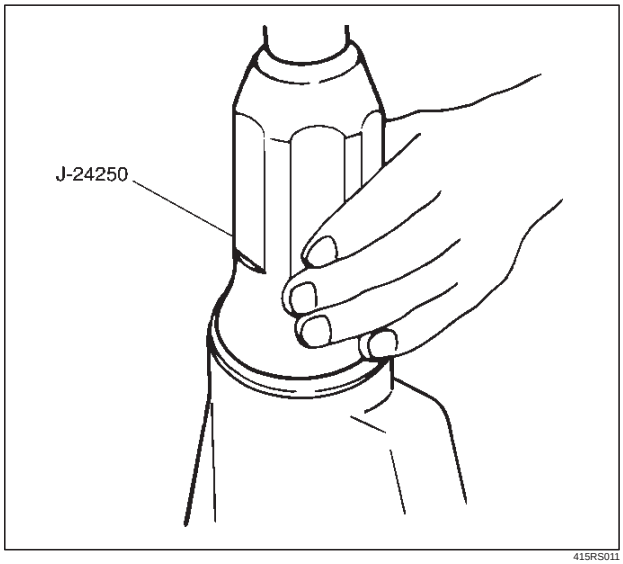

415RS011

9. Install dust cover.
10. Install flange.
11. Install flange nut.
    1. Apply lubricant to the pinion threads.
    2. Tighten the nut to the specified torque using the pinion flange holder J–37221.

Torque: 177–275N·m (130–203 lb ft)

NOTE: Discard used flange nut and install new one and do not over tighten the flange nut.

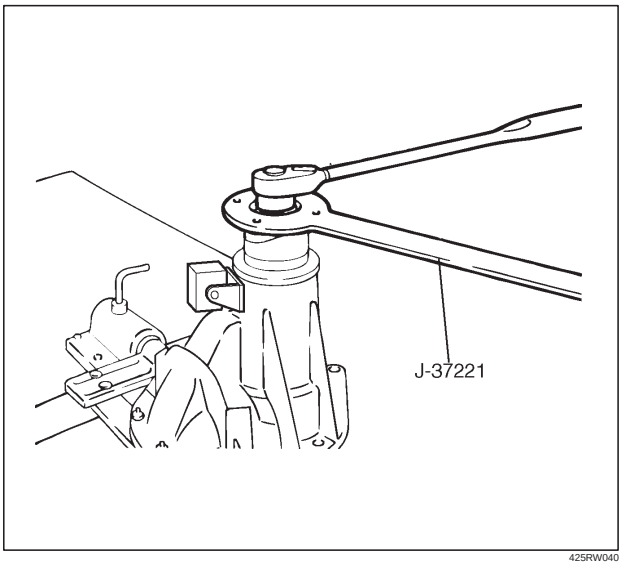

425RW040

3. Adjust pinion bearing preload.
    a. Measure the bearing preload by using a torque meter. Note the scale reading required to rotate the flange.
    b. Continue tightening flange nut until the specified starting torque is obtained.

Starting torque:

New bearing 0.7–1.1 N·m(5.64–9.98 lb in)

Used bearing 0.4–0.5N·m(2.86–4.94lb in)

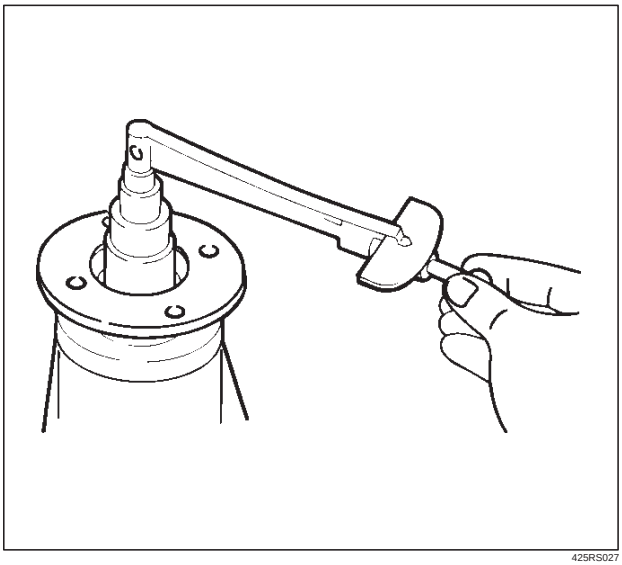

425RS027

4. Using punch J–39209, stake the flange nut at two points.

Downloaded from www.Manualslib.com manuals search engine

NOTE: When staking, be sure to turn the nut to insure that there is no change in bearing preload. Make sure of preload again as instructed in 3).

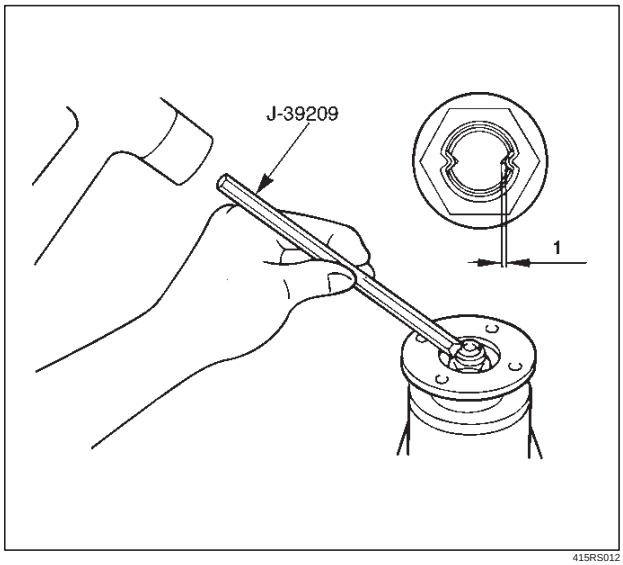

415RS012

Legend

(1) 1.3mm or less

12. Install adjust shim.
    1. Attach the side bearing to the differential assembly without shims. Support the opposite side using a pilot to prevent bearing damage.

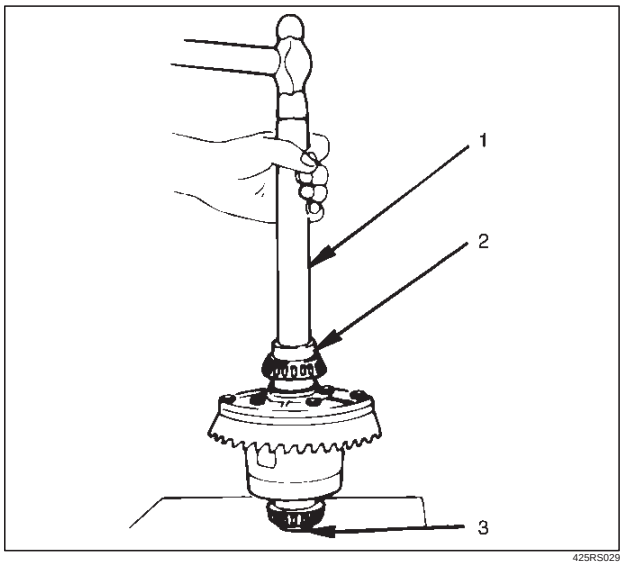

425RS029

Legend

(1) Drive handle:J–8092
(2) Installer:J–24244
(3) Pilot:J–8107–2

2. Insert the differential cage assembly with bearing outer races into the side bearing bores of the carrier.

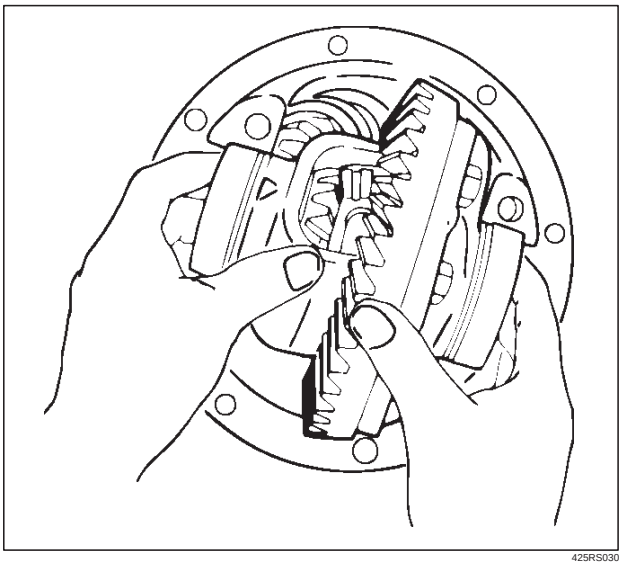

425RS030

3. Using two sets of feeler gauges, insert a feeler stock of sufficient thickness between each bearing outer race and the carrier to remove all end play. Make certain the feeler stock is pushed to the bottom of the bearing bores.

   Mount the dial indicator J–8001 on the carrier so that the indicator stem is at right angles to a tooth on the ring gear.

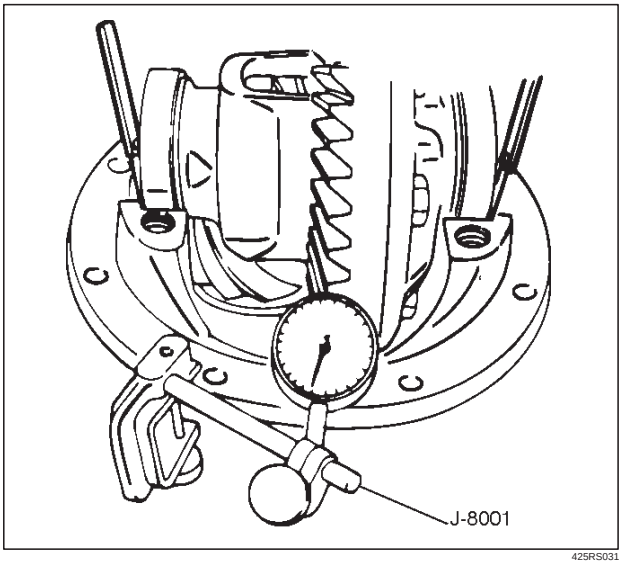

425RS031

Downloaded from www.Manualslib.com manuals search engine

4. Adjust feeler gauge thickness from side to side until ring gear backlash is in the specified range.

Backlash: 0.13–0.18 mm(0.005 –0.007 in)

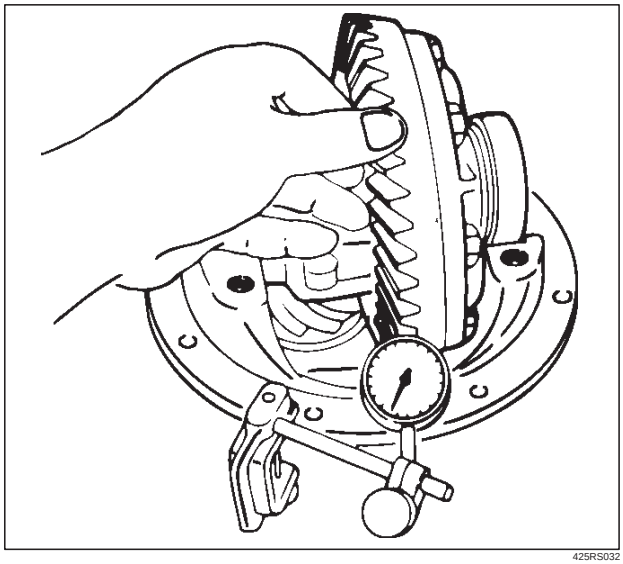

425RS032

With zero end play and correct backlash established, remove the feeler gauge packs, determine the thickness of the shims required and add 0.05 mm (0.002 in) to each shim pack to provide side bearing preload. Always use new shims.

5. Use bearing remover J–22888 and pilot J–8107–2 to remove side bearing.

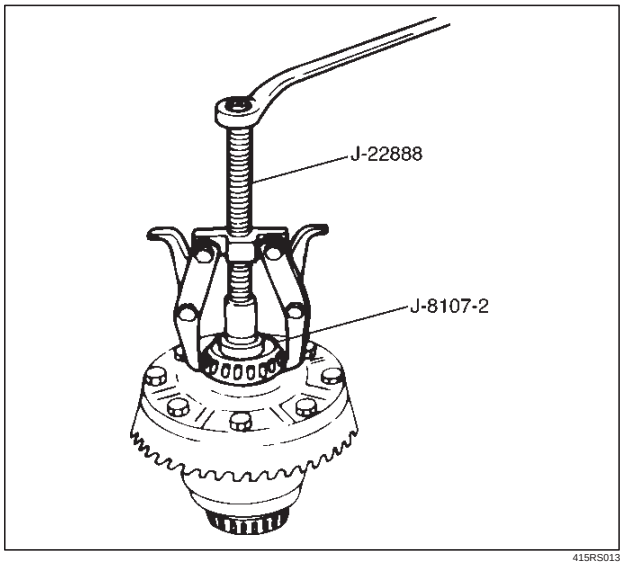

415RS013

13. Install the side bearings together with the selected shims.

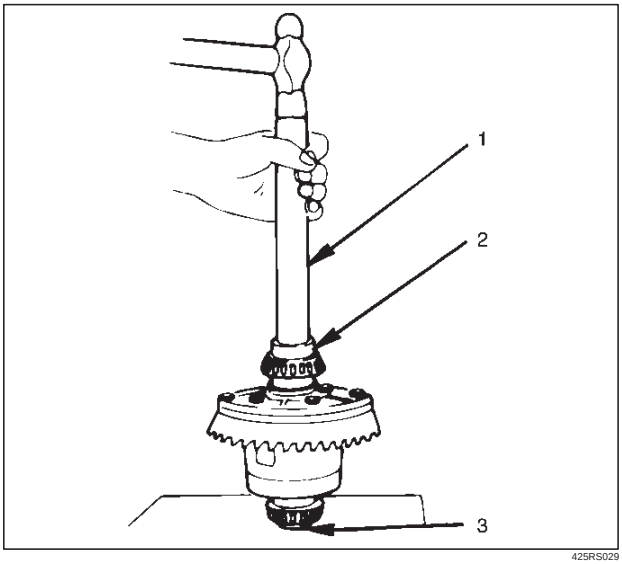

425RS029

Legend

(1) Drive Handle:J–8092
(2) Installer: J–24244
(3) Pilot: J–8107–2

14. Install side bearing outer race.
15. Install differential cage assembly.
16. Install bearing cap then align the setting marks(1) applied at disassembly.

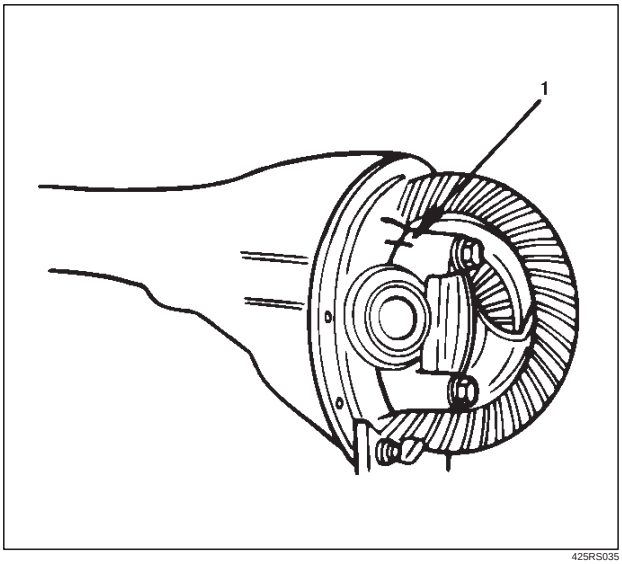

425RS035

Downloaded from www.Manualslib.com manuals search engine

17. Tighten the cap bolt to the specified torque.

Torque: 98 N·m (72 lb ft)

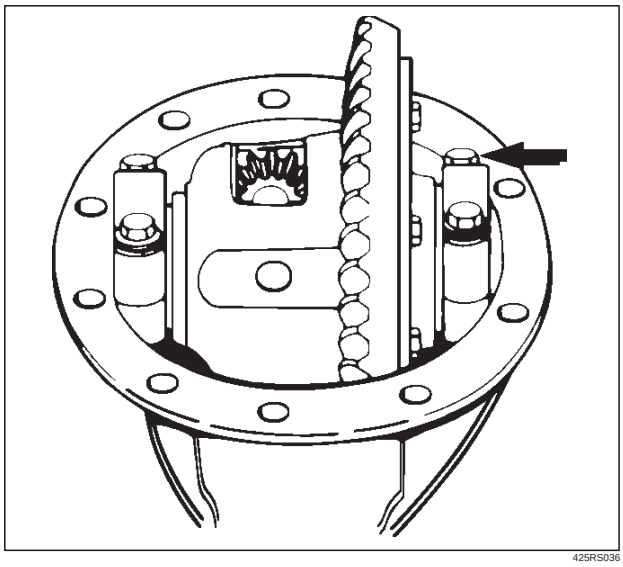

425RS036

1. Measure the amount of run–out of the ring gear at its rear face.

Standard: 0.02 mm (0.001 in)

Limit: 0.05 mm (0.002 in)

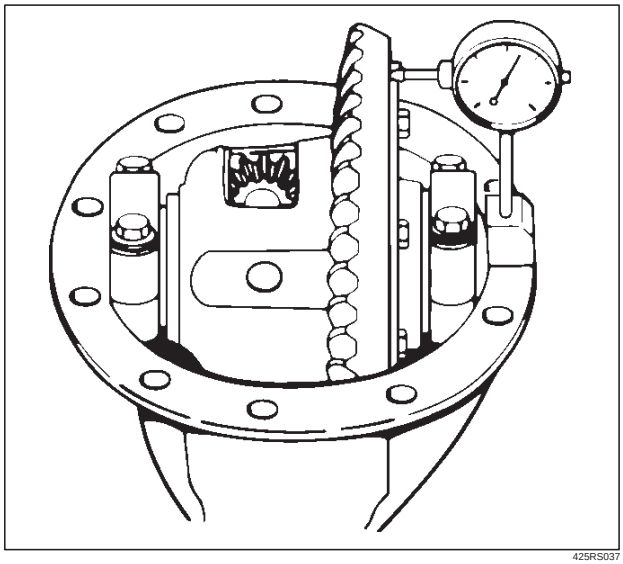

425RS037

Gear Tooth Contact Pattern Check and Adjustment

1. Apply a thin coat of prussian blue or equivalent to the faces of the 7–8 teeth of the ring gear. Check the impression of contact on the ring gear teeth and make necessary adjustment as described in illustration if the contact is abnormal.

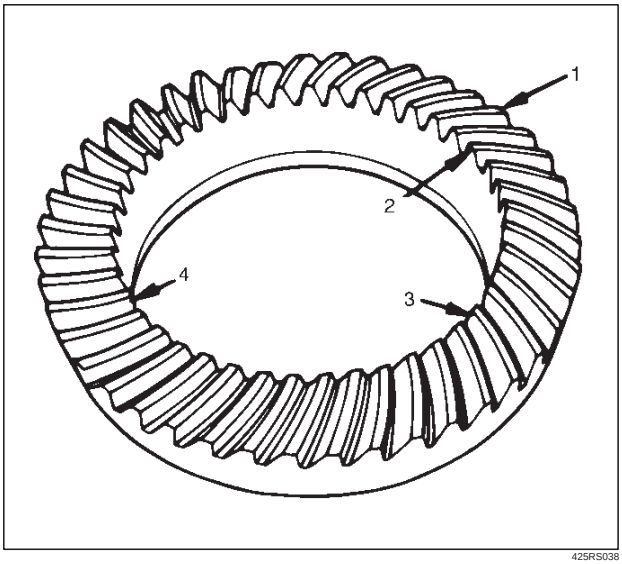

425RS038

Legend

(1) Heel
(2) Toe
(3) Concave Side(Coast)
(4) Convex Side(Drive)

Downloaded from www.Manualslib.com manuals search engine

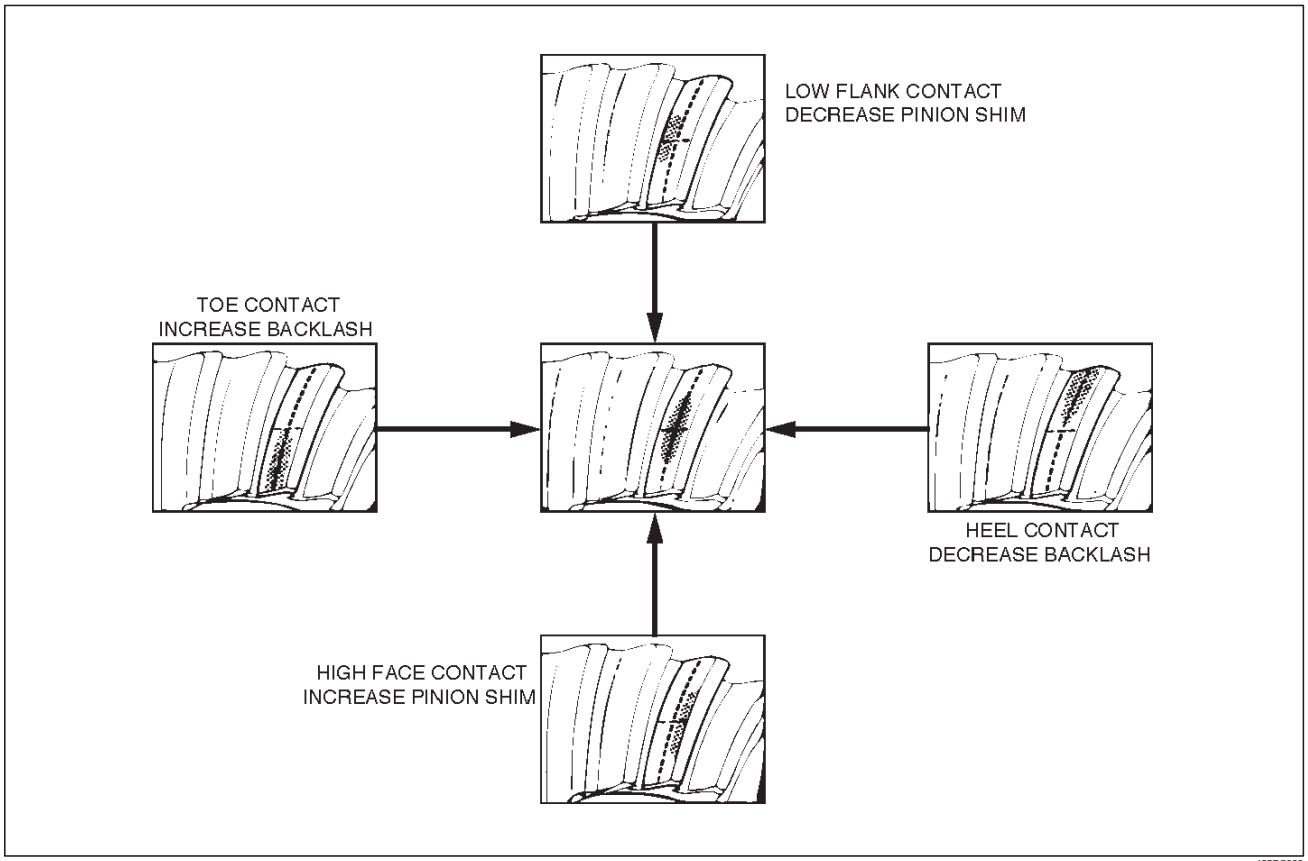

425RS039

18. Install differential assembly.
    1. Clean the faces of the front axle case and differential carrier.
       Apply Three Bond TB1215 or equivalent to the sealing side of the axle case and the carrier.
    2. Attach the differential case and the carrier assembly to the front axle case and tighten the nuts and bolts.

    Torque: 25 N·m (19 lb ft)

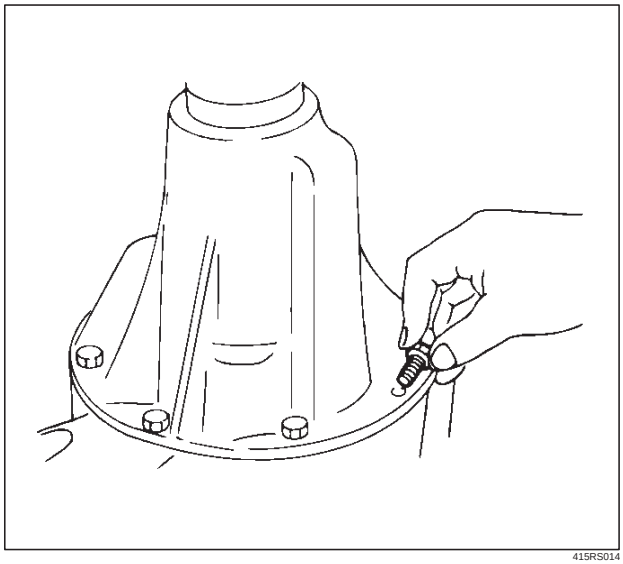

415RS014

    3. Fill the axle case with hypoid gear lubricant, to just below the filler hole.

    Lubricant capacity: 1.4 liter(1.5 US qt)

19. Install damper.
    1. Clean the faces and bolt thread hole of differential carrier.
    2. Install the bracket with new bolts.
    3. Install the damper to the bracket with new bolts.

    Torque: 25 N·m (19 lb ft)

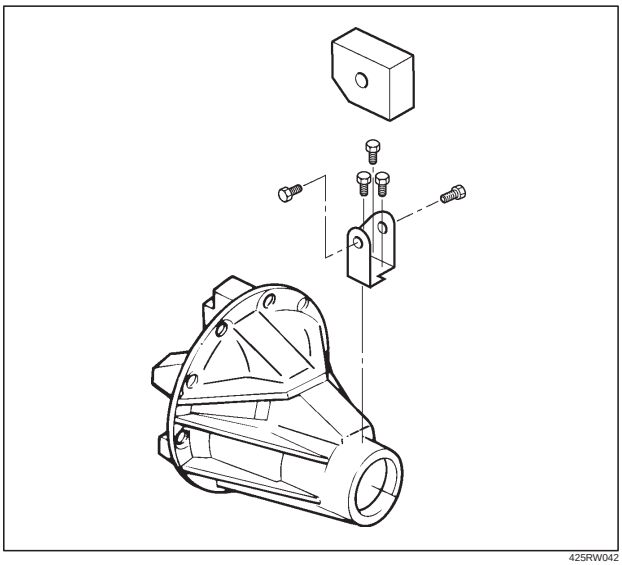

425RW042

Downloaded from www.Manualslib.com manuals search engine

Differential Cage Assembly

Disassembled View

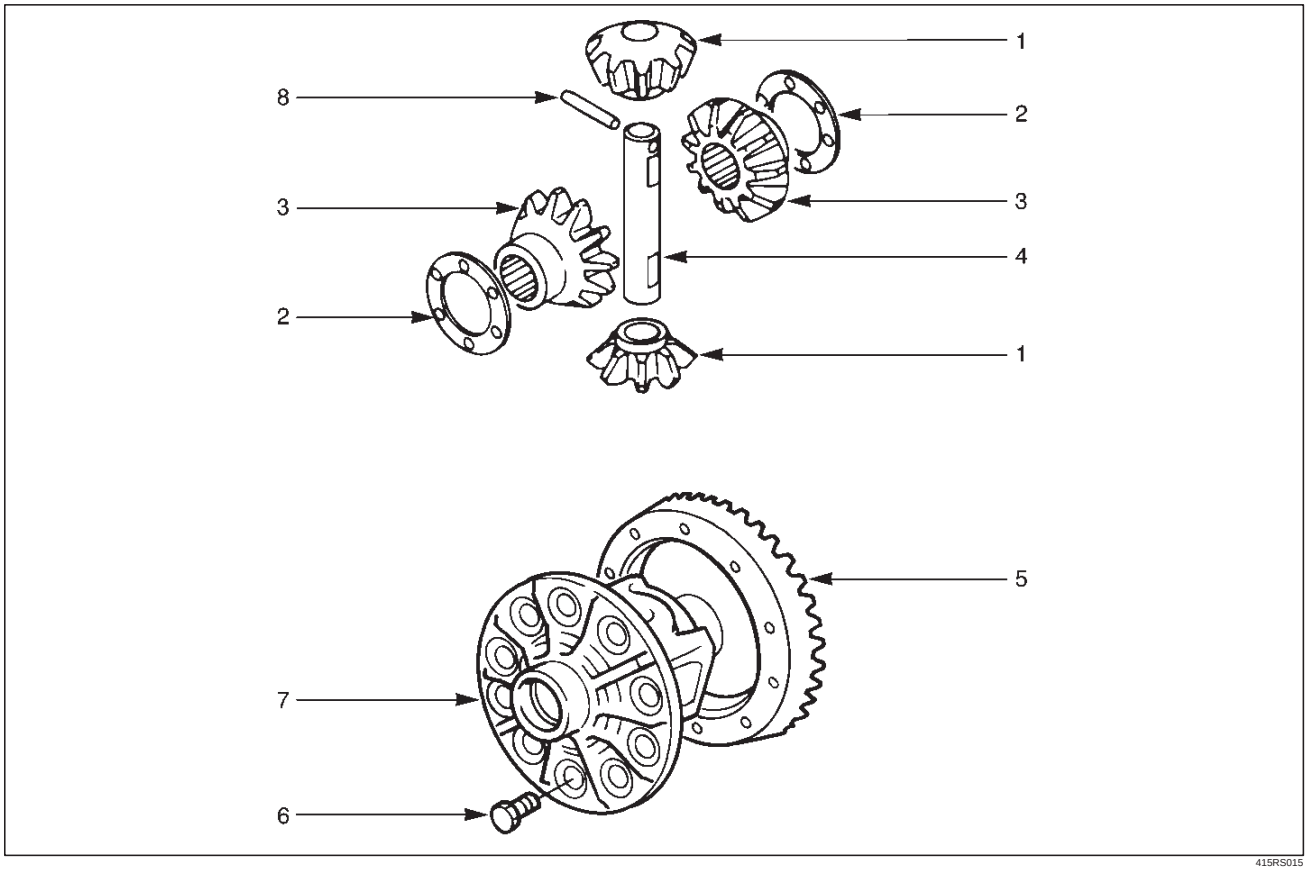

415RS015

Legend

(1) Pinion Gear
(2) Thrust Washer
(3) Side Gear
(4) Cross Pin
(5) Ring Gear
(6) Bolt
(7) Differential Cage
(8) Lock Pin

Disassembly

1. Remove bolt.
2. Remove ring gear.
3. Remove lock pin, break staking on the lock pin, using a 5 mm (0.20 in) diameter drill.

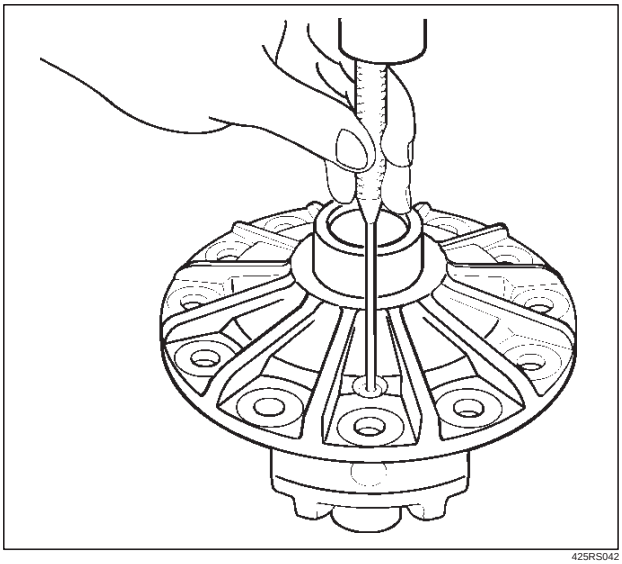

425RS042

Downloaded from www.Manualslib.com manuals search engine

4. Remove the cross pin, using a soft metal rod and a hammer.

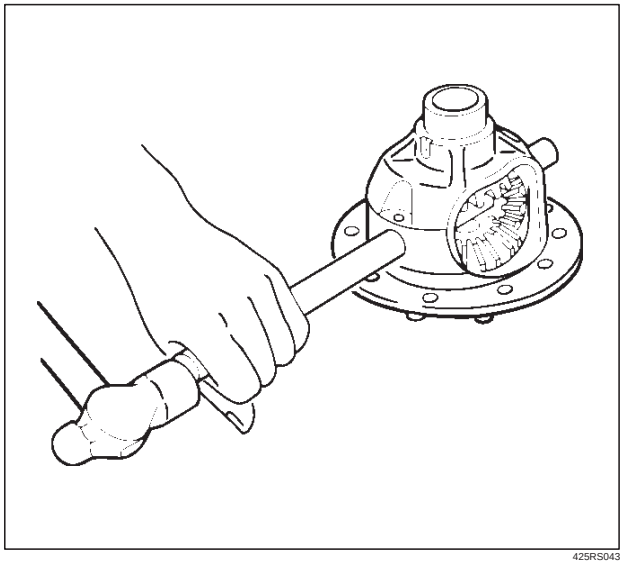

425RS043

5. Remove pinion gear.
6. Remove side gear.
7. Remove thrust washer.

Inspection and Repair

Make necessary correction or parts replacement if wear, damage, corrosion or any other abnormal conditions are found through inspection.
Check the following parts:

1. Ring gear, pinion gear
2. Bearing
3. Side gear, pinion gear, cross pin
4. Differential cage, carrier
5. Thrust washer
6. Oil seal

Ring gear replacement:

1. The ring gear should always be replaced with the drive pinion as a set.
2. Clean the ring gear threaded holes to remove the locking agent.
3. When installing the ring gear, apply LOCTITE 271 or equivalent to all the threaded area and half of the unthreaded area of the bolt.
4. Discard used bolts and install new ones.

   Torque: 108 N·m (80 lb ft)

5. Tighten the fixing bolts in a diagonal sequence as illustrated.

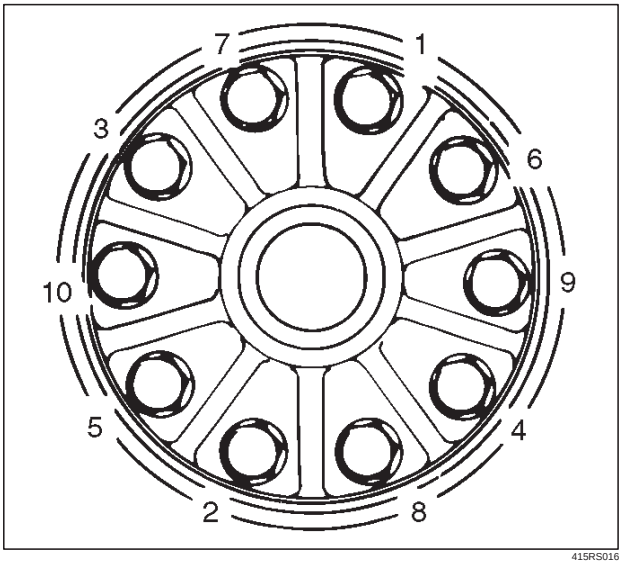

415RS016

Clearance between the differential pinion and the cross pin measurement:

Standard: 0.06 – 0.12 mm (0.002–0.005 in)

Limit: 0.2 mm (0.008 in)

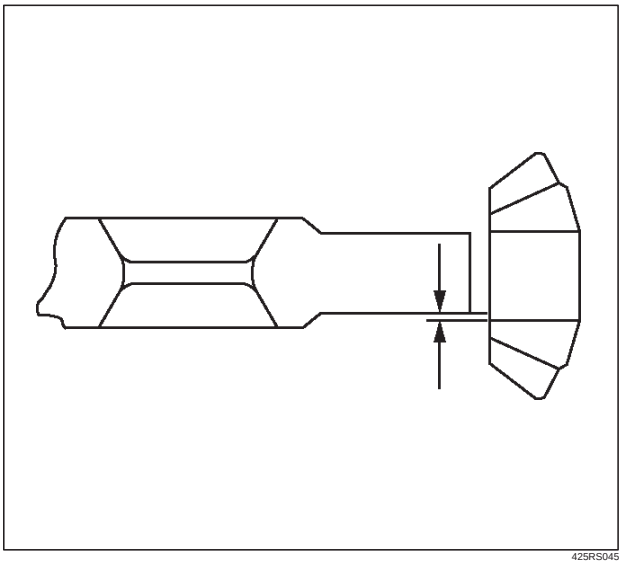

425RS045

Downloaded from www.Manualslib.com manuals search engine

Clearance between the side gear and the differential box:

Standard: 0.03–0.10 mm (0.001–0.004 in)

Limit: 0.15 mm(0.006 in)

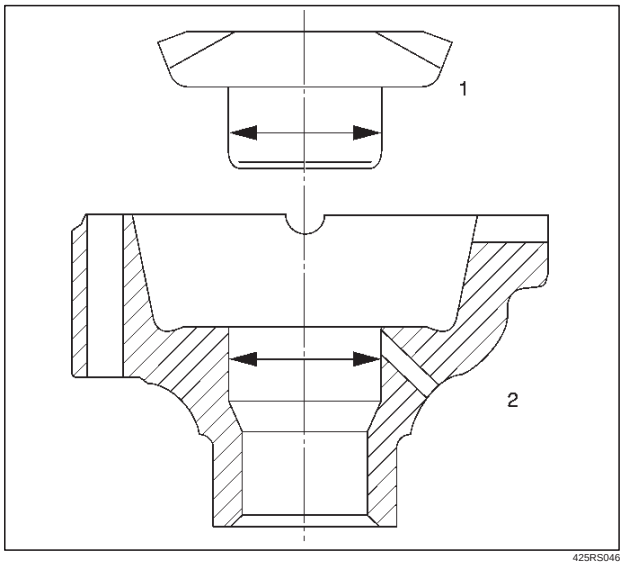

425RS046

Legend

(1) Side Gear

(2) Differential Box

Play in splines between the side gear and the axle shaft:

Standard: 0.08–0.36 mm(0.003 –0.014 in)

Limit:0.5m (0.02 in)

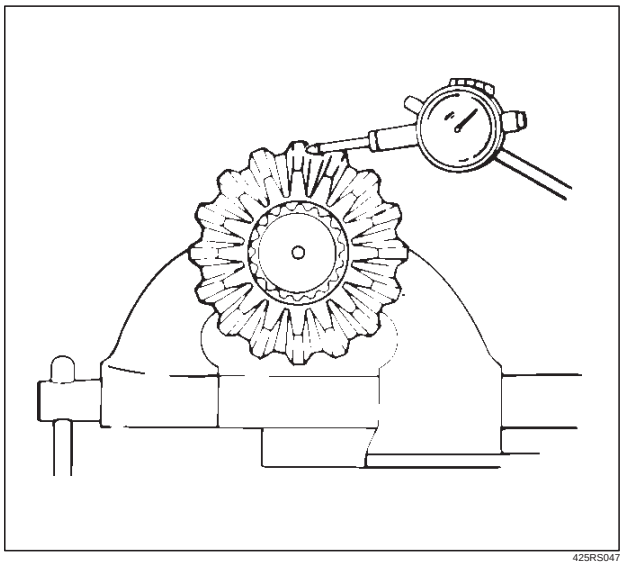

425RS047

Reassembly

1. Install thrust washer.
2. Install side gear.
3. Install the pinion gear by engaging it with the side gears while turning both pinion gears simultaneously in the same direction.

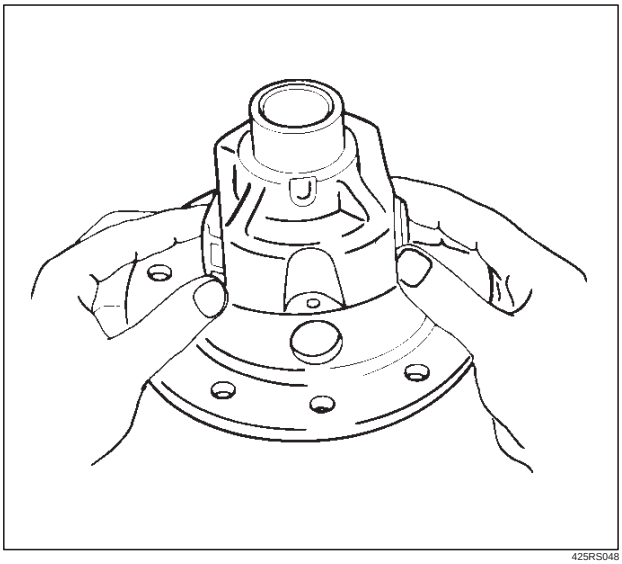

425RS048

4. Install cross pin.
   1. Be sure to install the cross pin so that it is in alignment with the lock pin hole in the differential cage.

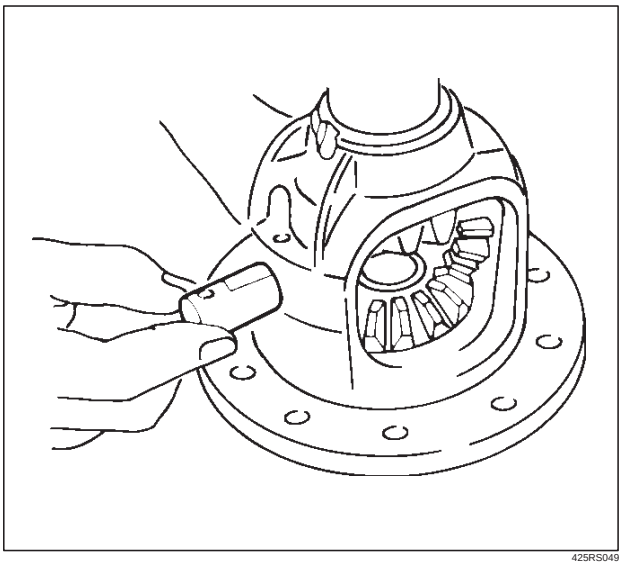

425RS049

   2. Adjust the backlash between the side gear and the pinion gear.

Backlash:0.03 – 0.08 mm (0.001– 0.003 in)

Downloaded from www.Manualslib.com manuals search engine

Thickness of thrust washers available:

1.00 mm, 1.05 mm, 1.10 mm (0.039 in, 0.041 in, 0.043 in)

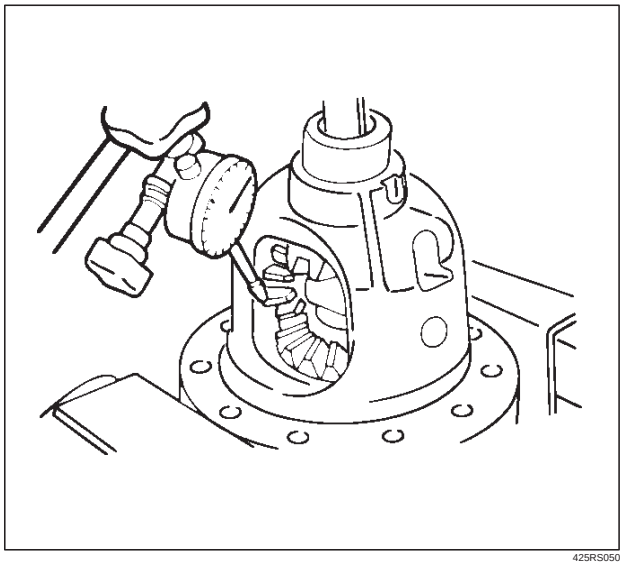

425RS050

5. Install lock pin. After lock pin installation, stake the cage to secure the lock pin.

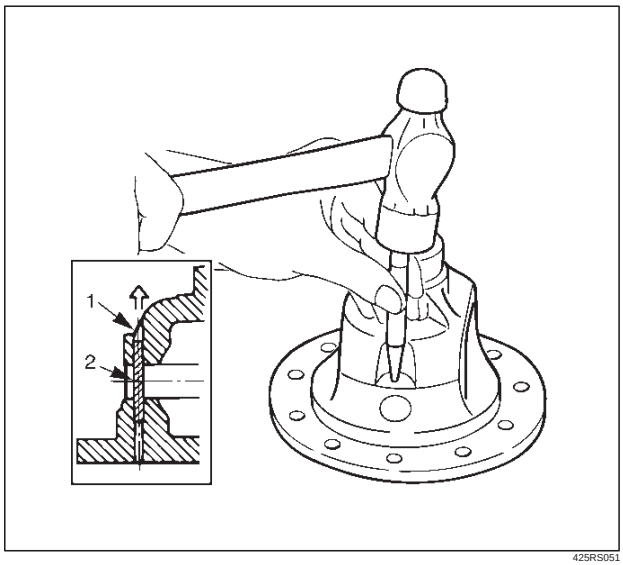

425RS051

Legend

(1) Staked Portion
(2) Lock Pin

6. Clean the ring gear threaded holes to remove the locking agent. When installing the ring gear, apply LOCTITE 271 or equivalent to all the threaded area and half of the unthreaded area of the bolt.

7. Tighten the bolts in diagonal sequence as illustrated.

Torque: 108 N·m (80 lb ft)

NOTE: Discard used bolts and install new ones.

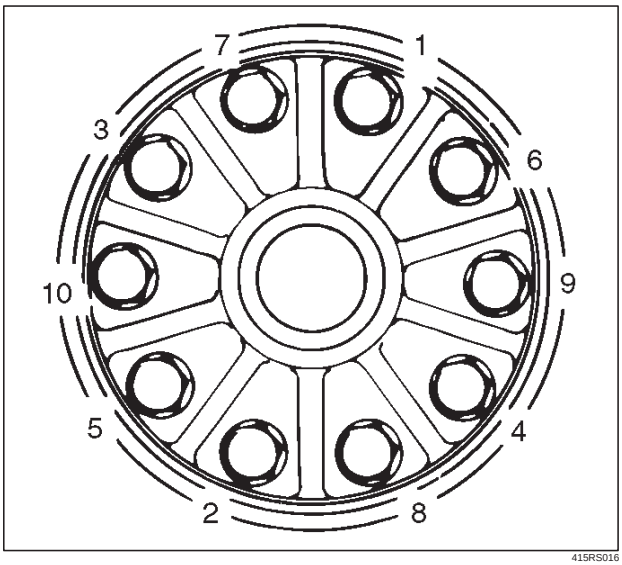

415RS016

Downloaded from www.Manualslib.com manuals search engine

Main Data and Specifications

General Specifications

Axle tube Type		It consists of the duct, a cast iron housing and the axle tube.
Gear type		Hypoid
Gear ratio	(to 1)	4.300
Differential type		Two pinion
Oil capacity	liter (US qt)	1.4 (1.5) (Differential) 0.12 (0.13) (Actuator Housing: Shift on the fly)
Type of lubricant		75W–90 GL–5 (Multi grade type) Refer to General Information
Axle shaft type		Constant velocity joint (Birfield joint type and double offset joint)
Hub locking Type		Rigid

Torque Specifications

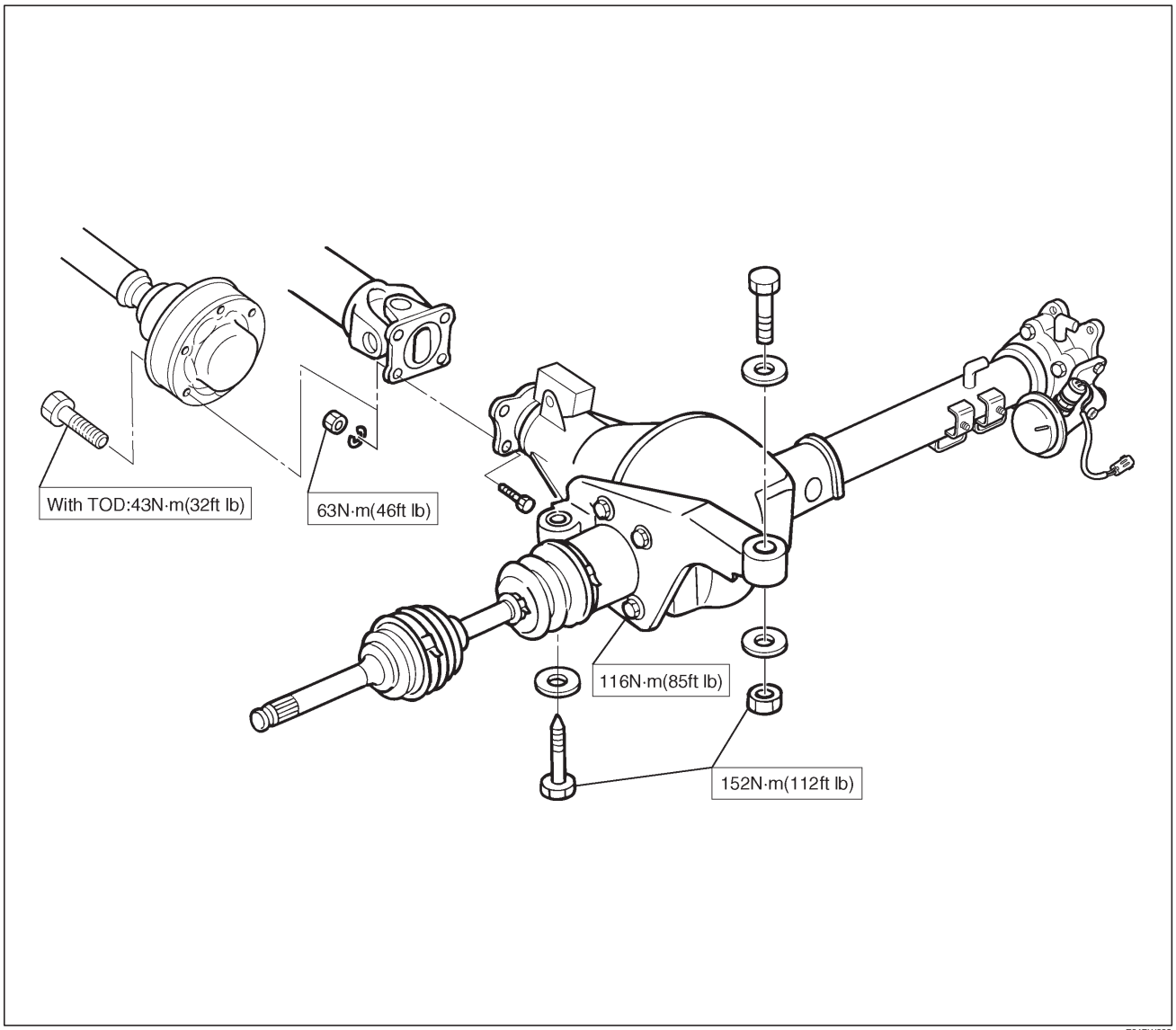

E04RW002

Downloaded from www.Manualslib.com manuals search engine

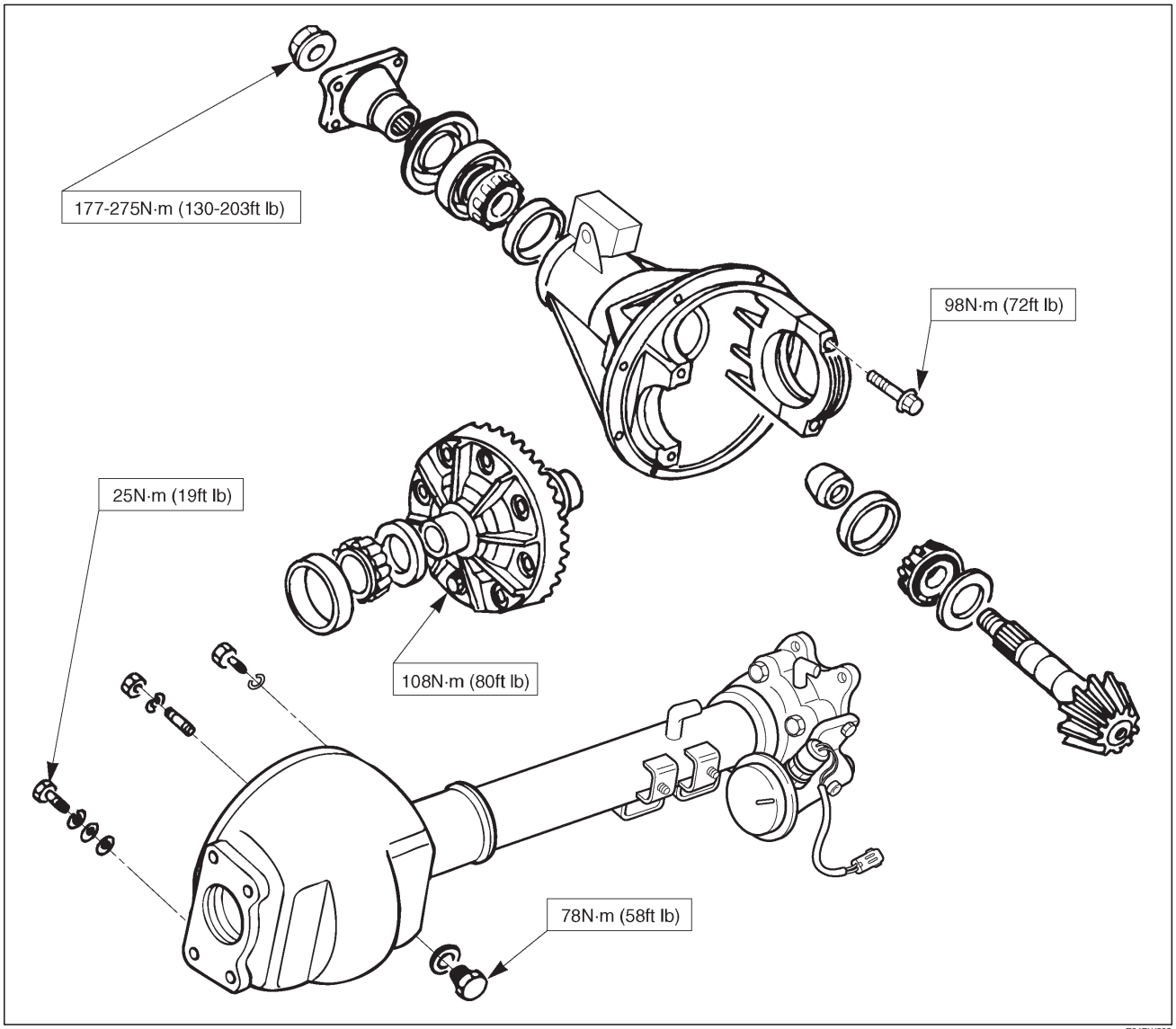

E04RW003

Downloaded from www.Manualslib.com manuals search engine

Special Tools

ILLUSTRATION	TOOL NO. TOOL NAME
901RS210	**J–37221** Holder; Pinion flange
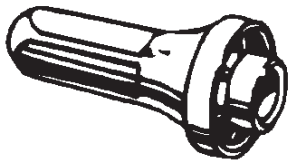 901RS232	**J–24250** Installer; Oil seal
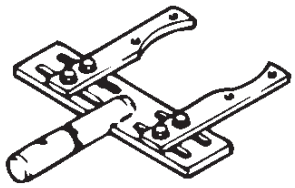 901RS212	**J–37264** Differential holding fixture (Use with J–3289–20 base)
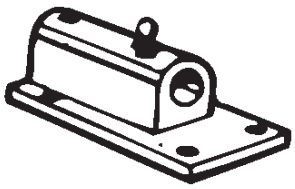 901RS213	**J–3289–20** Holding fixture base
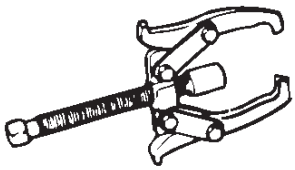 901RS214	**J–22888** Puller; Side bearing
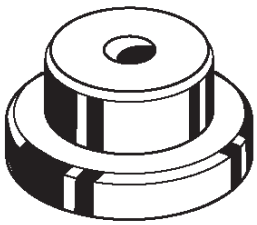 901RS238	**J–8107–2** Adapter; Side bearing plug

ILLUSTRATION	TOOL NO. TOOL NAME
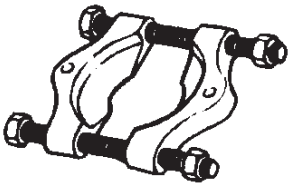 901RS235	**J–22912–01** Separator
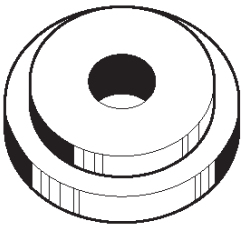 901RS240	**J–24256** Installer; Outer bearing outer race
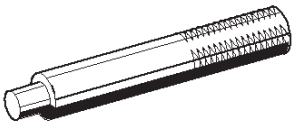 901RS24	**J–8092** Driver handle
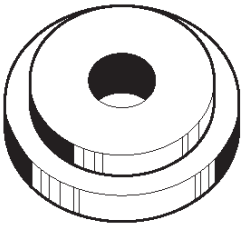 901RS240	**J–24252** Installer; Inner bearing outer race
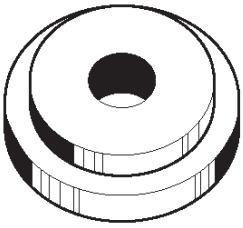 901RS220	**J–21777–42** Pilot
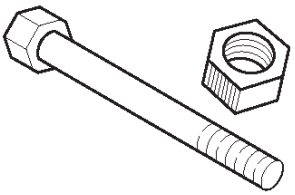 901RS242	**J–23597–9** Nut and bolt

Downloaded from www.Manualslib.com manuals search engine

ILLUSTRATION	**TOOL NO.** TOOL NAME
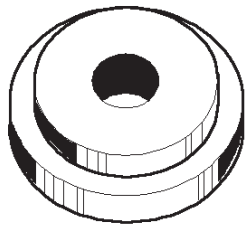 901RS243	**J–23597–7** Gauge plate
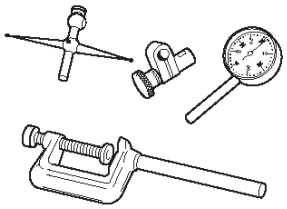 901RS224	**J–8001** Dial indicator
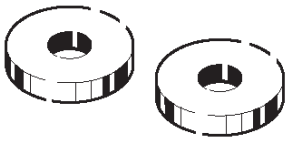 901RS244	**J–23597–8** Disc
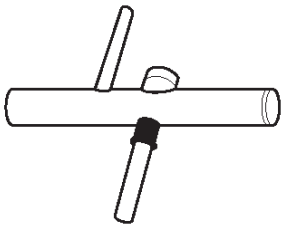 901RS226	**J–23597–1** Arbor
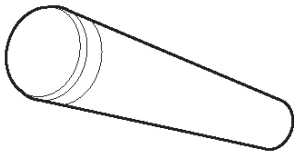 901RS227	**J–6133–01** Installer; Pinion bearing
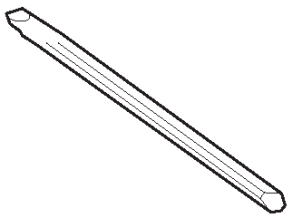 901RS228	**J–39209** Punch; End nut lock

ILLUSTRATION	**TOOL NO.** TOOL NAME
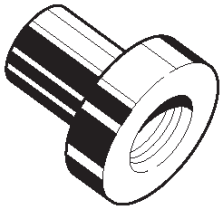 901RS245	**J–24244** Installer; Side bearing
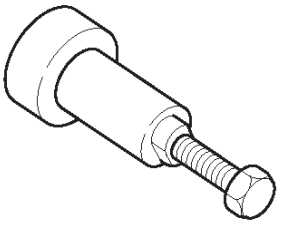 901RS230	**J–39602** Remover; Outer bearing

Downloaded from www.Manualslib.com manuals search engine

TROOPER

DRIVELINE/AXLE

DIFFERENTIAL (REAR)

CONTENTS

Service Precaution 4A2–1
General Description 4A2–3
Diagnosis 4A2–4
Axle Housing 4A2–5
Axle Housing and Associated Parts 4A2–5
Removal 4A2–5
Oil Seal Replacement 4A2–6
Installation 4A2–6
Axle Shaft 4A2–7
Axle Shaft and Associated Parts 4A2–7
Removal 4A2–7
Inspection and Repair 4A2–8
Oil Seal Replacement 4A2–9
Installation 4A2–9
Pinion Oil Seal 4A2–10
Pinion Oil Seal and Associated Parts 4A2–10
Removal 4A2–10
Inspection and Repair 4A2–11
Installation 4A2–11
Differential Assembly 4A2–12
Differential Assembly and Associated Parts 4A2–12
Removal 4A2–12
Installation 4A2–13
Disassembled View 4A2–14
Disassembly 4A2–15
Reassembly 4A2–17
Differential Cage Assembly 4A2–24
Disassembled View 4A2–24
Disassembly 4A2–25
Inspection and Repair 4A2–25
Reassembly 4A2–26
Limited Slip Differential 4A2–28
Disassembled View 4A2–28
Disassembly 4A2–29
Inspection and Repair 4A2–29
Reassembly 4A2–31
Main Data and Specifications 4A2–35
Special Tools 4A2–36

Service Precaution

WARNING: THIS VEHICLE HAS A SUPPLEMENTAL RESTRAINT SYSTEM(SRS). REFER TO THE SRS COMPONENT AND WIRING LOCATION VIEW IN ORDER TO DETERMINE WHETHER YOU ARE PERFORMING SERVICE ON OR NEAR THE SRS COMPONENTS OR THE SRS WIRING. WHEN YOU ARE REFORMING SERVICE ON OR NEAR THE SRS COMPONENTS OR THE SRS WIRING, REFER TO THE SRS SERVICE INFORMATION. FAILURE TO FOLLOW WARNINGS COULD RESULT IN POSSIBLE AIR BAG DEPLOYMENT, PERSONAL INJURY, OR OTHERWISE UNNEEDED SRS SYSTEM REPAIRS.

CAUTION: Always use the correct fastener in the proper location. When you replace a fastener, use ONLY the exact part number for that application. ISUZU will call out those fasteners that require a replacement after removal. ISUZU will also call out the fasteners that require thread lockers or thread sealant. UNLESS OTHERWISE SPECIFIED , do not use supplemental coatings (Paints, greases, or other corrosion inhibitors) on threaded fasteners or fastener joint interfaces. Generally,such coatings adversely affect the fastener torque and the joint clamping force, and may damage the fastener. When you install fasteners, use the correct tightening sequence and specification. Following these instructions can help you avoid damage to parts and systems.

The Ω244 differential has two N types A-type and B-type.

A-type: the sticker with bar code is attached.

B-type: the sticker with no bar code on the lower part of carrier is attached.

Downloaded from www.Manualslib.com manuals search engine

In case of Work Shop Manual;

A-type: Refer to ’98 UBS Work Shop Manual.
B-type: Described in ’00UBS Work Shop Manual.

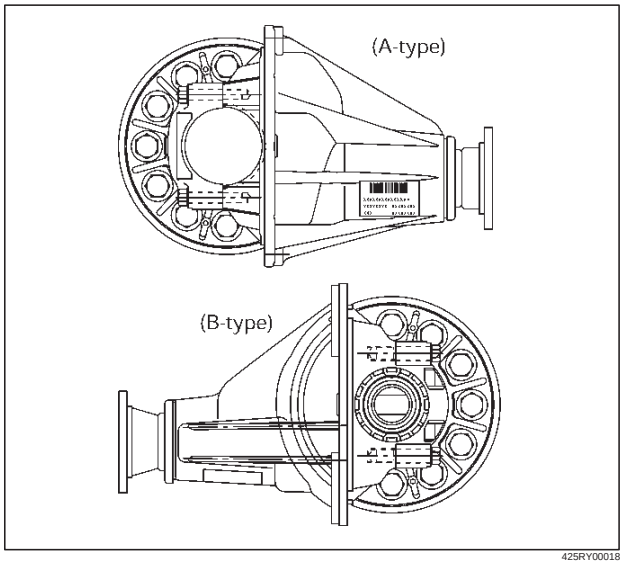

425RY00018

Downloaded from www.Manualslib.com manuals search engine

General Description

The rear axle assembly is of the semi–floating type in which the vehicle weight is carried on the axle housing . The center line of the pinion gear is below the center line of the ring gear (hypoid drive).
All parts necessary to transmit power from the propeller shaft to the rear wheels are enclosed in a banjo type axle housing.
The 9.61 inch ring gear rear axle uses a conventional ring and pinion gear set to transmit the driving force of the engine to the rear wheels. This gear set transfers this driving force at a 90 degree angle from the propeller shaft to the drive shafts.
The axle shafts are supported at the wheel end of the shaft by a roller bearing.
The pinion gear is supported by two tapered roller bearings. The pinion depth is set by a shim pack located between the gear end of the pinion and the roller bearing that is pressed onto the pinion. The pinion bearing preload is set by crushing a collapsible spacer between the bearings in the axle housing.

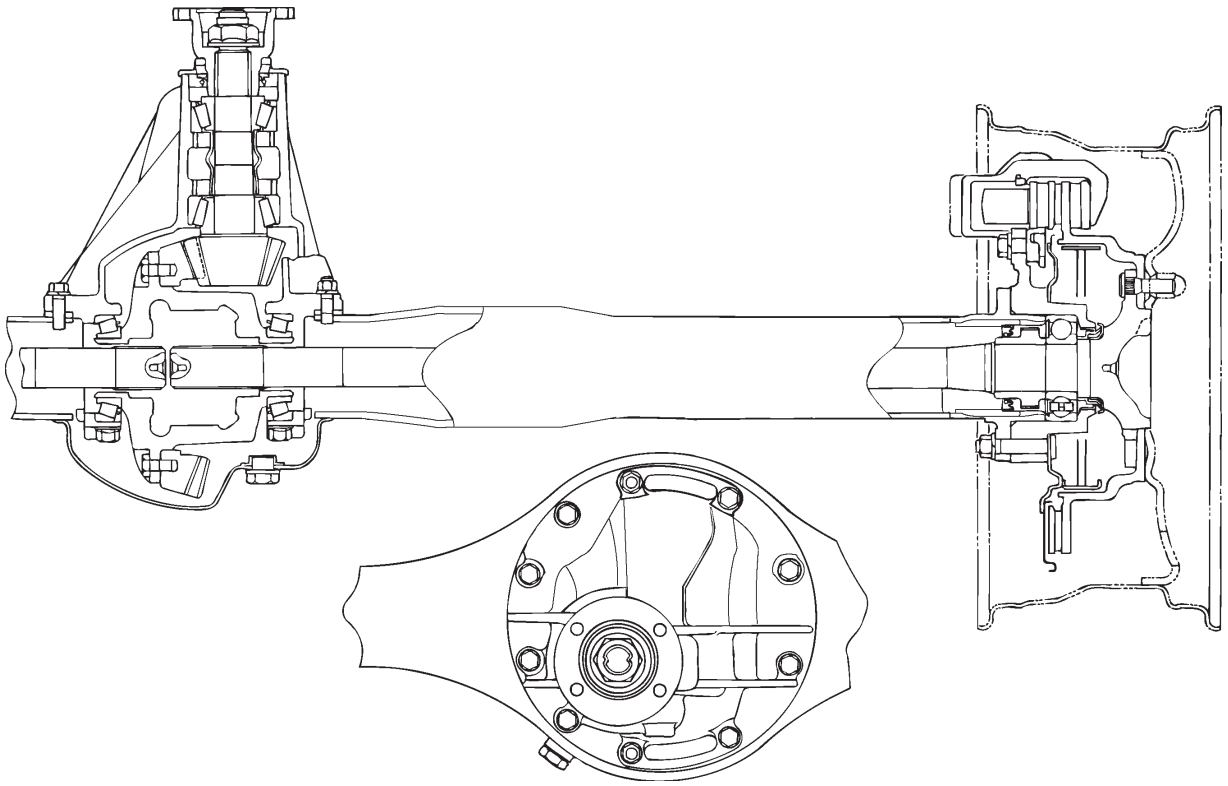

420RY00003

The ring gear is bolted onto the differential cage with 12 bolts.
The differential cage is supported in the axle housing by two tapered roller bearings. The differential and ring gear are located in relationship to the pinion by using selective shims and spacers between the bearing and the axle housing. To move the ring gear, shims are deleted from one side and an equal amount are added to the other side. These shims are also used to preload the bearings which are pressed onto the differential cage. Two bearing caps are used to hold the differential into the rear axle housing.
The differential is used to allow the wheels to turn at different rates of speed while the rear axle continues to transmit the driving force. This prevents tire scuffing when going around corners and prevents premature wear on internal axle parts.
The rear axle is sealed with a pinion seal, a seal at each axle shaft end, and by a liquid gasket between the differential carrier and the axle housing.

Downloaded from www.Manualslib.com manuals search engine

Diagnosis

Many noises that seem to come from the rear axle actually originate from other sources such as tires, road surface, wheel bearings, engine, transmission, muffler, or body drumming. Investigate to find the source of the noise before disassembling the rear axle. Rear axles, like any other mechanical device, are not absolutely quiet but should be considered quiet unless some abnormal noise is present.

To make a systematic check for axle noise, observe the following:

1. Select a level asphalt road to reduce tire noise and body drumming.
2. Check rear axle lubricant level to assure correct level, and then drive the vehicle far enough to thoroughly warm up the rear axle lubricant.
3. Note the speed at which noise occurs. Stop the vehicle and put the transmission in neutral. Run the engine speed slowly up and down to determine if the noise is caused by exhaust, muffler noise, or other engine conditions.
4. Tire noise changes with different road surfaces; axle noises do not. Temporarily inflate all tires to 344 kPa (50 psi) (for test purposes only). This will change noise caused by tires but will not affect noise caused by the rear axle.

   Rear axle noise usually stops when coasting at speeds under 48 km/h (30 mph); however, tire noise continues with a lower tone. Rear axle noise usually changes when comparing pull and coast, but tire noise stays about the same.

   Distinguish between tire noise and rear axle noise by noting if the noise changes with various speeds or sudden acceleration and deceleration. Exhaust and axle noise vary under these conditions, while tire noise remains constant and is more pronounced at speeds of 32 to 48 km/h (20 to 30 mph). Further check for tire noise by driving the vehicle over smooth pavements or dirt roads (not gravel) with the tires at normal pressure. If the noise is caused by tires, it will change noticeably with changes in road surface.
5. Loose or rough front wheel bearings will cause noise which may be confused with rear axle noise; however, front wheel bearing noise does not change when comparing drive and coast. Light application of the brake while holding vehicle speed steady will often cause wheel bearing noise to diminish. Front wheel bearings may be checked for noise by jacking up the wheels and spinning them or by shaking the wheels to determine if bearings are loose.
6. Rear suspension rubber bushings and spring insulators dampen out rear axle noise when correctly installed. Check to see that there is no link or rod loosened or metal–to–metal contact.
7. Make sure that there is no metal–to–metal contact between the floor and the frame.

After the noise has been determined to be in the axle, the type of axle noise should be determined, in order to make any necessary repairs.

Gear Noise

Gear noise (whine) is audible from 32 to 89 km/h (20 to 55 mph) under four driving conditions.

1. Driving under acceleration or heavy pull.
2. Driving under load or under constant speed.
3. When using enough throttle to keep the vehicle from driving the engine while the vehicle slows down gradually (engine still pulls slightly).
4. When coasting with the vehicle in gear and the throttle closed. The gear noise is usually more noticeable between 48 and 64 km/h (30 and 40 mph) and 80 and 89 km/h (50 and 55 mph).

Bearing Noise

Bad bearings generally produce a rough growl or grating sound, rather than the whine typical of gear noise. Bearing noise frequently “wow–wows” at bearing rpm, indicating a bad pinion or rear axle side bearing. This noise can be confused with rear wheel bearing noise.

Rear Wheel Bearing Noise

Rear wheel bearing noise continues to be heard while coasting at low speed with transmission in neutral. Noise may diminish by gentle braking. Jack up the rear wheels, spin them by hand and listen for noise at the hubs. Replace any faulty wheel bearings.

Knock At Low Speeds

Low speed knock can be caused by worn universal joints or a side gear hub counter bore in the cage that is worn oversize. Inspect and replace universal joints or cage and side gears as required.

Backlash Clunk

Excessive clunk on acceleration and deceleration can be caused by a worn rear axle pinion shaft, a worn cage, excessive clearance between the axle and the side gear splines, excessive clearance between the side gear hub and the counterbore in the cage, worn pinion and side gear teeth, worn thrust washers, or excessive drive pinion and ring gear backlash. Remove worn parts and replace as required. Select close–fitting parts when possible. Adjust pinion and ring gear backlash.

Downloaded from www.Manualslib.com manuals search engine

Axle Housing

Axle Housing and Associated Parts

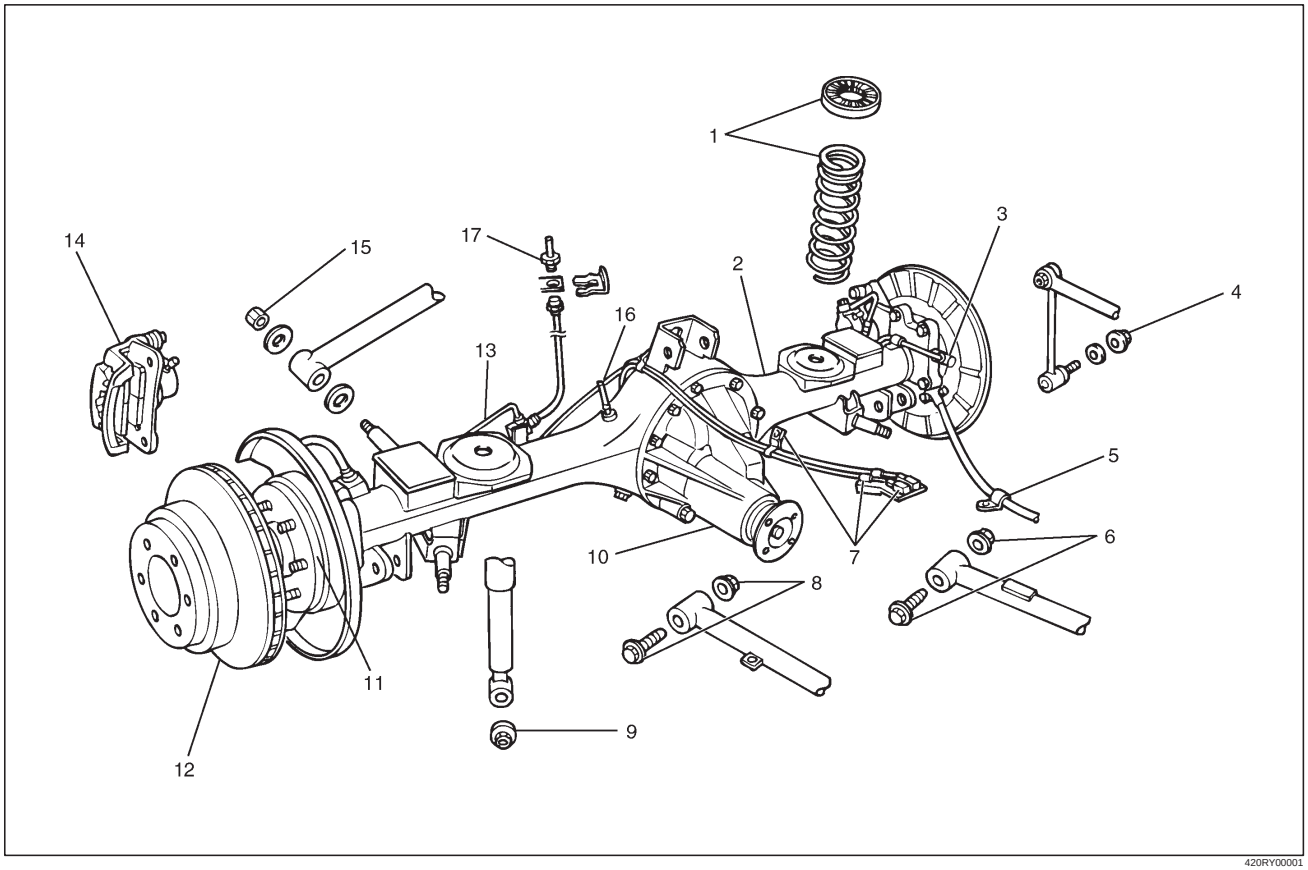

Legend

(1) Coil Spring and Insulator
(2) Axle Housing Assembly
(3) ABS Speed Sensor and Harness
(4) Nut
(5) Parking Brake Cable
(6) Bolt and Nut
(7) Antilock Brake System (ABS) Connector and Bracket
(8) Bolt and Nut
(9) Nut
(10) Differential Assembly
(11) Axle Shaft Assembly
(12) Brake Disc
(13) Brake Pipe
(14) Brake Caliper
(15) Nut
(16) Breather Hose
(17) Flare Nut

Removal

1. Raise the vehicle and support it with suitable safety stands.
   The hoist must remain under the rear axle housing.
2. Remove brake fluid. Refer to Hydraulic Brakes in Brake section.
3. Remove rear wheels and tires. Refer to Wheel in Suspension section.
4. Remove propeller shaft. Refer to Rear Propeller Shaft in this section.
5. Drain the rear axle oil into a proper container.
6. Remove parking brake cable, release the connection between the cable fixing clip equalizer. Refer to Parking Brakes in Brake section.
7. Move the clip aside and pull out the breather hose.

Downloaded from www.Manualslib.com manuals search engine

8. Disconnect the ABS connectors (1) and remove the brackets (2) attached to the frame and center link.

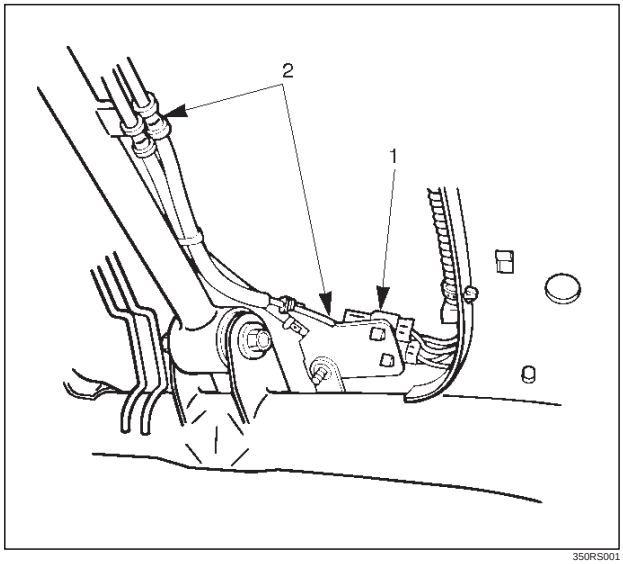

350RS001

9. Loosen the brake tube flare nut, remove the clip and take out the brake tube.
10. Remove the shock absorber fixing nut from the axle housing.
11. Remove the stabilizer linkage mounting nut from the axle housing.
12. Remove the lateral rod fixing nut from the axle housing.
13. Remove the center link mounting bolt and nut from the axle housing.
14. Remove the trailing link fixing bolt and nut from the axle housing.
15. Jack down and remove the coil spring and insulator.
16. Axle housing assembly can be separated from the vehicle on completion of steps 1 – 11.
17. Remove the brake caliper fixing bolt (3), loosen the flare nut (1), release the clip (2) and take out the brake caliper together with the flexible hose.

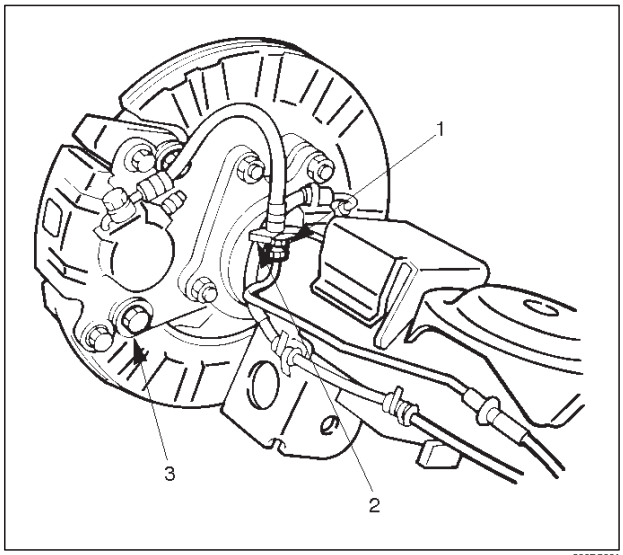

306RS001

18. Remove brake disc.
19. Remove antilock brake system speed sensor fixing bolt and the clip and bracket on the axle housing.
20. Remove the brake pipe clip and fixing bolt on the axle housing and take out the brake pipe.
21. Remove the bearing holder fixing nut and take out the axle shaft assembly, be sure not to damage the oil seal by the spline of the shaft, Refer to Axle Shaft in this section.
22. Remove differential assembly, refer to Differential Assembly in this section.

Oil Seal Replacement

Remove the oil seal, carefully not to damage the housing, and mount new oil seal using oil seal installer J–39210.

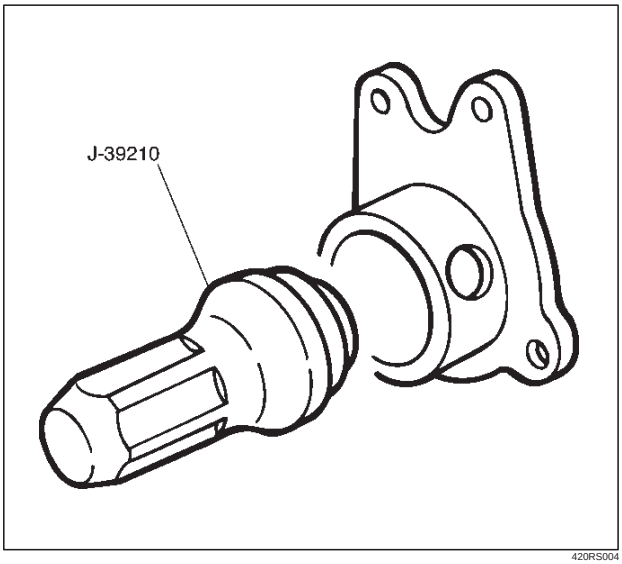

420RS004

Installation

1. Install differential assembly, refer to Differential Assembly in this section.
2. Install axle shaft assembly then tighten the bearing holder mounting nut to the specified torque. Be sure not to damage the oil seal by the spline of the shaft.

   Torque: 74N·m (54lb ft)
3. Install brake pipe.
4. Connect antilock brake system (ABS) speed sensor and harness, refer to 4–Wheel Anti–Lock Brake System (ABS) in Brake section.
5. Install brake disc.
6. Install brake caliper. Refer to Disk Brakes in Brake section.
7. Install axle housing assembly.
8. Install coil spring and insulator.
9. Install the trailing link fixing bolt and nut to the axle housing. For the procedures in items 9–13, refer to Suspension section.
10. Install the center link bolt and nut to the axle housing.
11. Install the lateral rod fixing nut to the axle housing.
12. Install the stabilizer linkage mounting nut to the axle housing.

Downloaded from www.Manualslib.com manuals search engine

13. Install the shock absorber fixing nut to the axle housing.
14. Install brake tube flare nut, Refer to Disk Brakes in Brake section.
15. Install ABS connector and bracket.
16. Connect breather hose.
17. Install parking brake cable, Refer to Parking Brakes in Brake section.
18. Bleed brakes. Refer to Hydraulic Brakes in Brake section.

Axle Shaft

Axle Shaft and Associated Parts

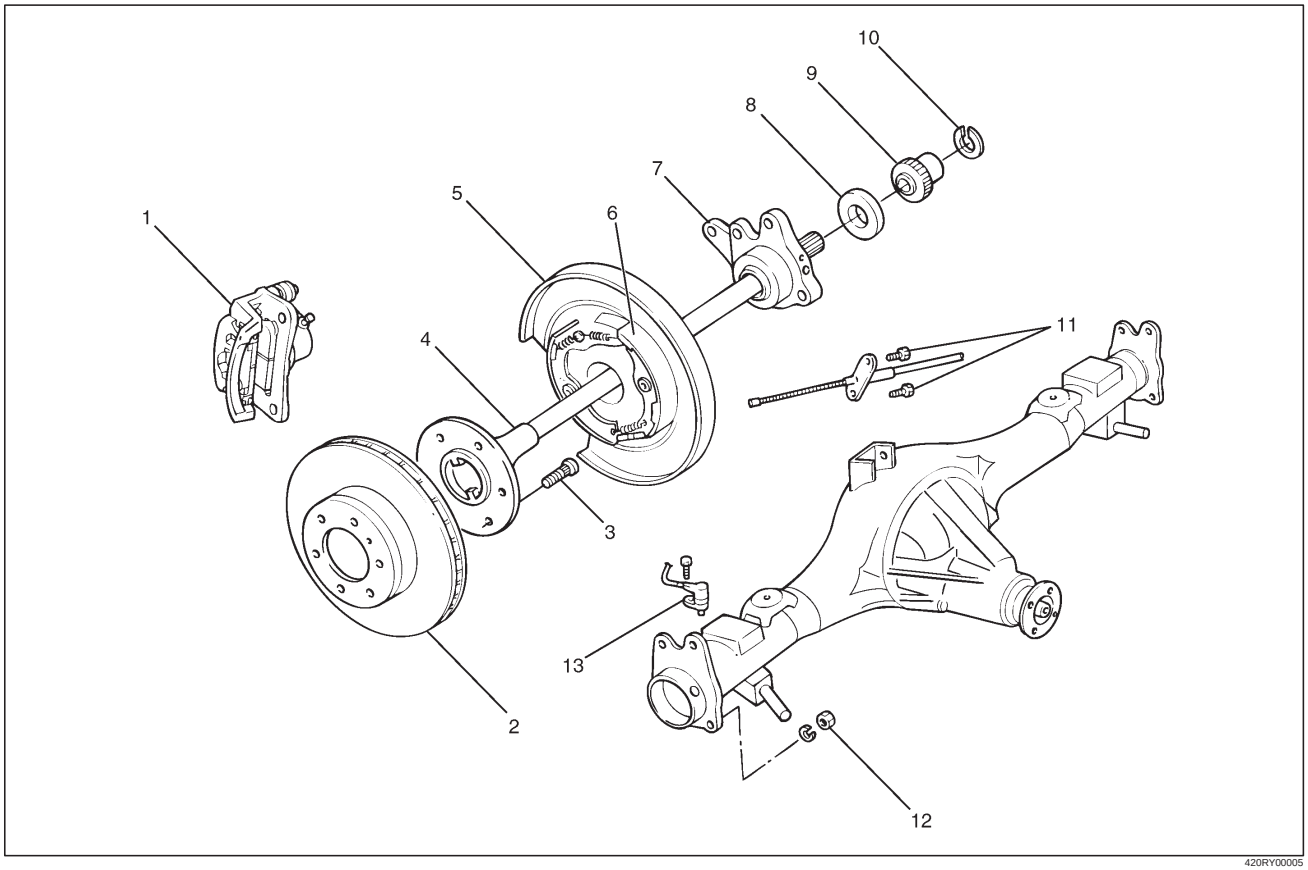

420RY00005

Legend

(1) Brake Caliper
(2) Brake Disc
(3) Wheel Pin
(4) Axle Shaft Assembly
(5) Back Plate
(6) Parking Brake Assembly
(7) Bearing Holder
(8) Bearing
(9) Retainer
(10) Snap Ring
(11) Bolt
(12) Nut
(13) Antilock Brake System (ABS) Speed Sensor

Removal

1. Raise the vehicle.
2. Remove tires and wheels. Refer to Wheel in Steering section.
3. Remove brake caliper. Use a wire to attach the brake caliper to the frame. Refer to Disk Brakes in Brake section.
4. Remove brake disc.
5. Remove ABS sensor.
6. Remove Parking brake assembly. Refer to Parking Brakes in Brake section.

Downloaded from www.Manualslib.com manuals search engine

7. Remove the parking brake cable mounting bolts(Behind the back plate)(1).

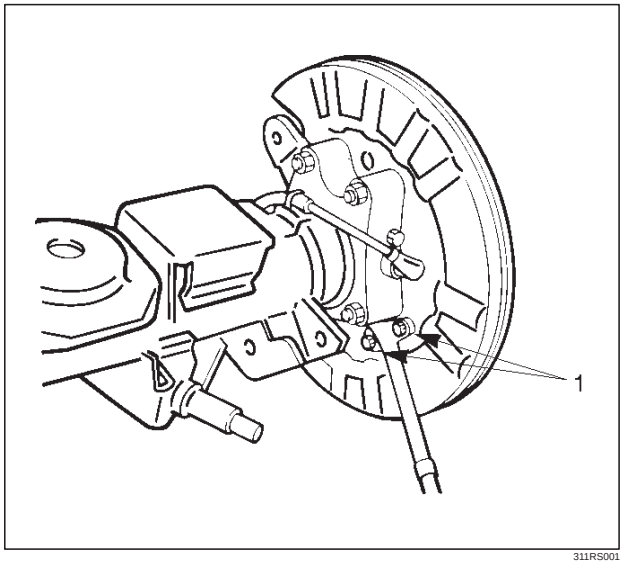

311RS001

8. Remove the bearing holder mounting nuts.
9. Remove axle shaft assembly.

NOTE: Be sure not to damage the oil seal.

10. Remove snap ring.
11. Using a bearing remover J–39211 and press, remove retainer together with the bearing holder.

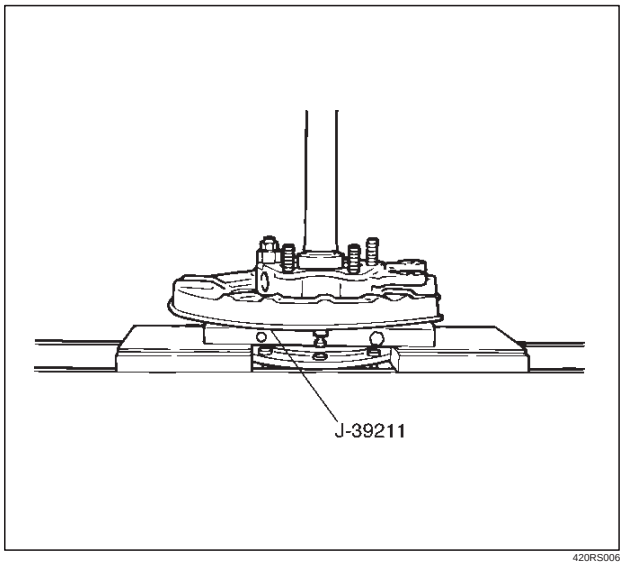

420RS006

12. Remove bearing.
13. Remove bearing holder.
14. Remove back plate.
15. Remove the wheel pins using a remover J–6627–A.

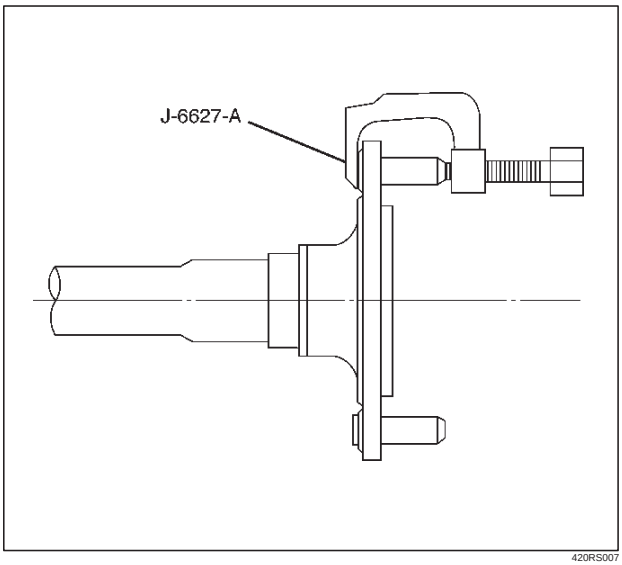

420RS007

Inspection and Repair

Make necessary correction or parts replacement if wear, corrosion or any other abnormal conditions are found through inspection.

Visual Check:

Check the following parts for wear, damage, noise or any other abnormal conditions:

1. Axle shaft
2. Bearing

When checking the axle shaft, pay special attention to the splined portions and replace the shaft if distortion or step wear is noticeable. Correct slight step wear with a grinder.

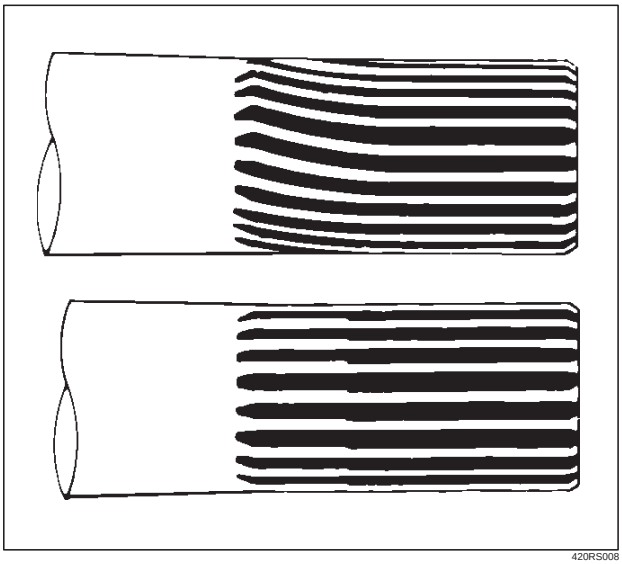

420RS008

Downloaded from www.Manualslib.com manuals search engine

Axle Shaft Run–out

Limit: 1.0 mm (0.039 in)

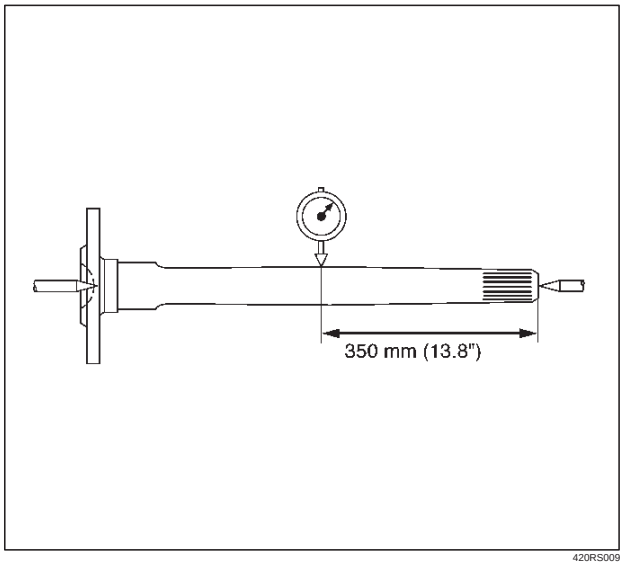

420RS009

Axle Shaft Flange Run–out

Limit: 0.08 mm (0.003 in)

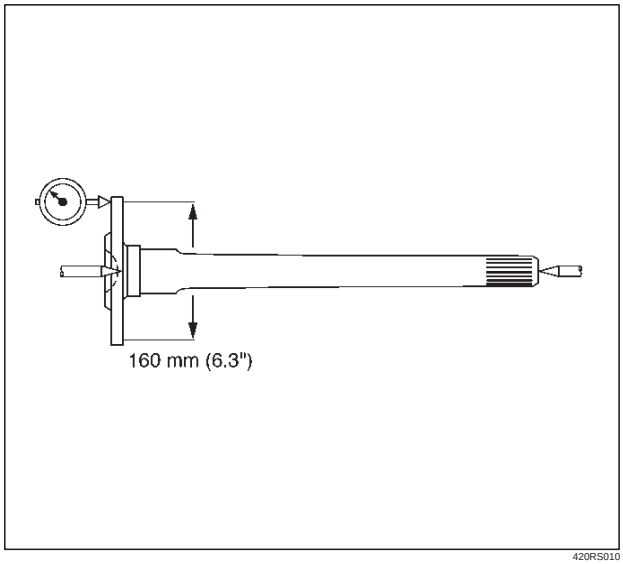

420RS010

Oil Seal Replacement

Remove the oil seal carefully not to damage the bearing holder bore .
When installing, use oil seal installer J–39379.

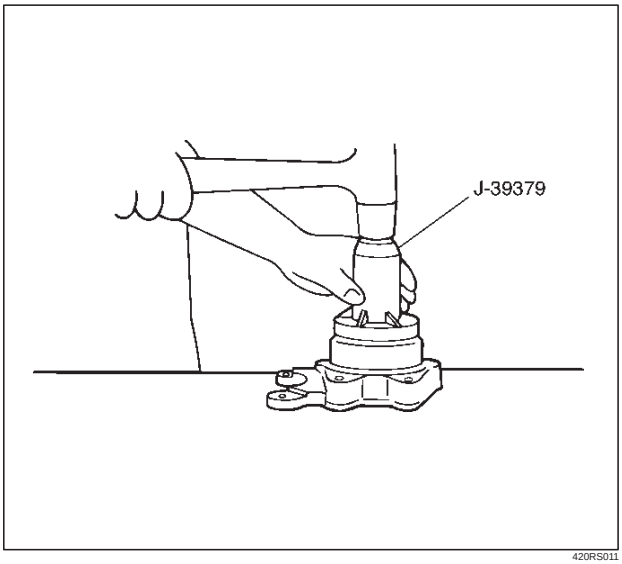

420RS011

Installation

1. Install wheel pin.
2. Install back plate.
3. Install bearing holder.
4. Install bearing.
5. Install retainer by using a bearing installer J–39212, press fit together with the bearing.

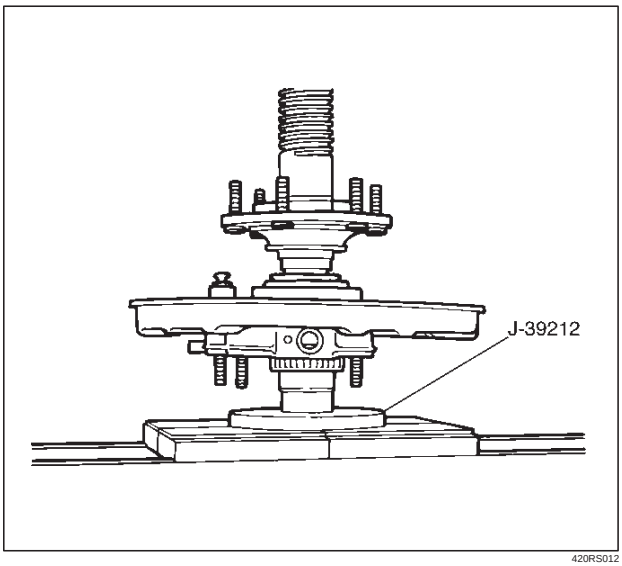

420RS012

Downloaded from www.Manualslib.com manuals search engine

6. Install snap ring.
7. Install axle shaft assembly.

NOTE: Be sure not to damage the oil seal.

8. Tighten the bearing holder mounting nut to the specified torque.

   Torque: 74N·m (54 lb ft)

9. Fix the parking brake cable mounting bolt (Behind the back plate).
10. Install parking brake assembly, refer to Parking Brakes in Brake section.
11. Install antilock brake system sensor.
12. Install brake disc.
13. Install brake caliper, refer to Disk Brakes in Brake section.

Pinion Oil Seal

Pinion Oil Seal and Associated Parts

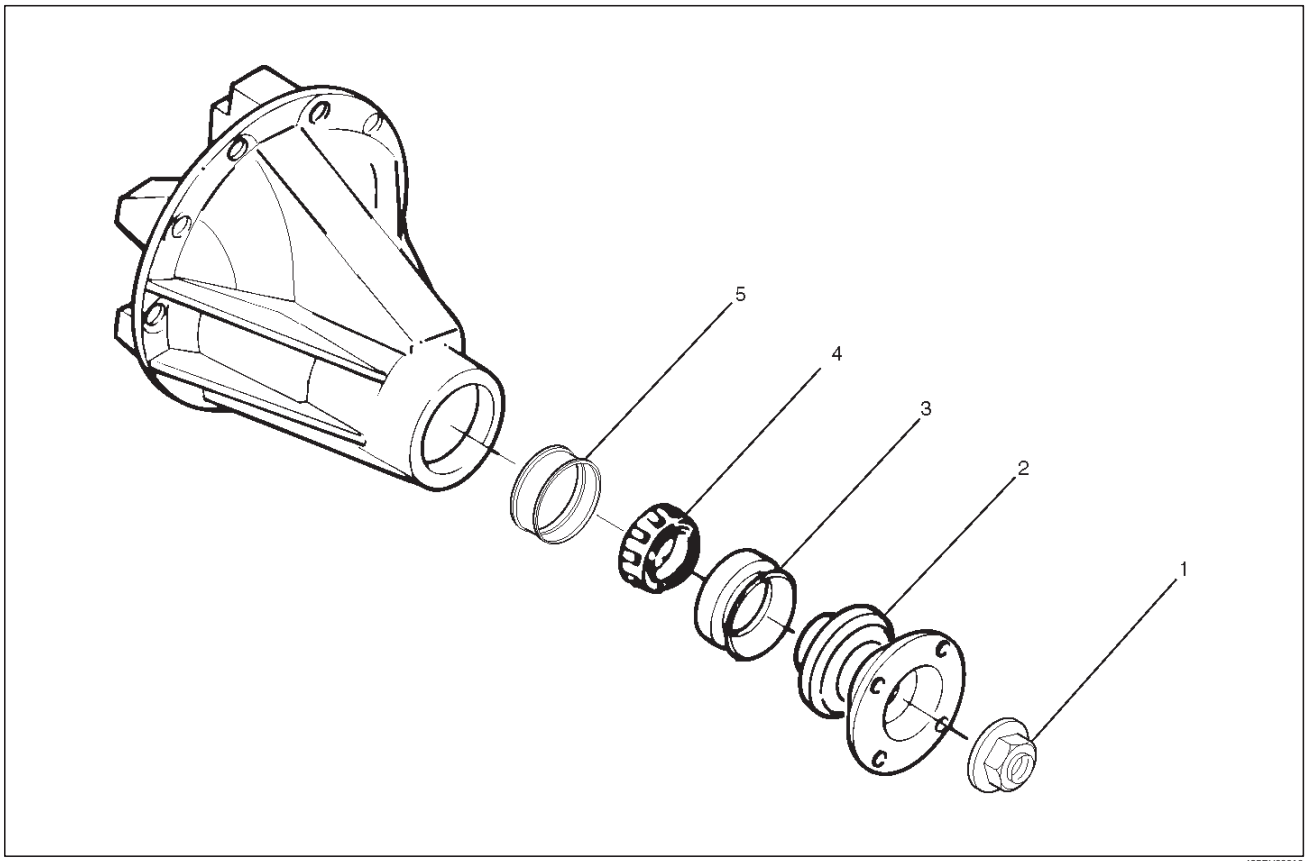

425RY00010

Legend

(1) Flange Nut and Washer
(2) Flange
(3) Oil Seal
(4) Outer Bearing
(5) Collapsible Spacer

Removal

1. Remove the rear propeller shaft. Refer to Rear Propeller Shaft in this section.
2. Drain the rear axle oil.

Downloaded from www.Manualslib.com manuals search engine

3. Remove flange nut and washer by using pinion flange holder J–8614–01 after raising up its staked parts completely.

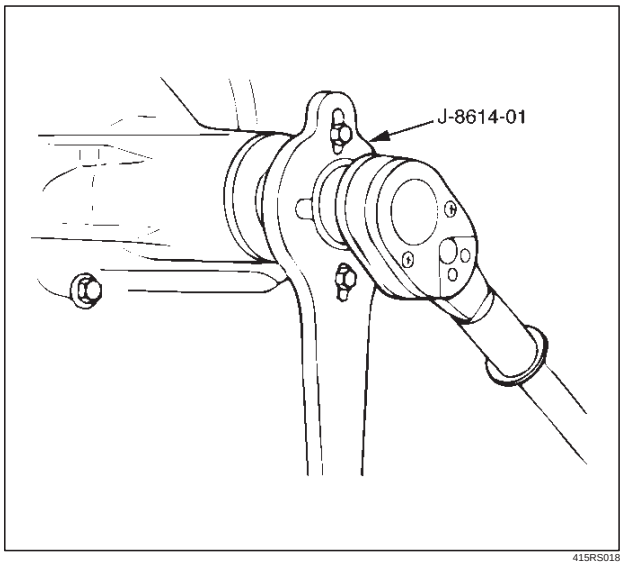

415RS018

4. Remove flange.
5. Remove oil seal.
6. Remove outer bearing by using remover J–39602.

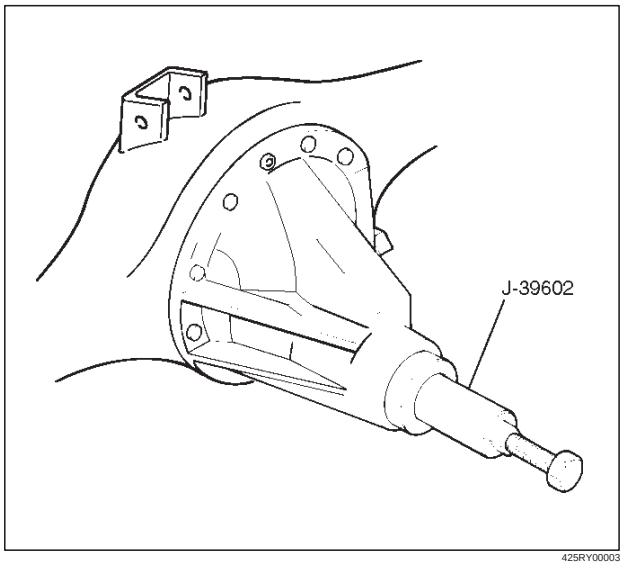

425RY00003

7. Remove collapsible spacer.

Inspection and Repair

Make necessary correction or parts replacement if wear, damage, corrosion or any other abnormal conditions are found through inspection.
Check the following parts:

1. Seal surface of the pinion.
2. Cage bore for burns.

Installation

1. Install collapsible spacer, discard the used collapsible spacer and install a new one.
2. Install outer bearing.

NOTE: Do not drive in, but just temporarily set in the outer bearing by hand, which should be indirectly pressed in finally by tightening the flange nut.

3. By using the seal installer J–37263, install a new oil seal (1) that has grease on seal lip.

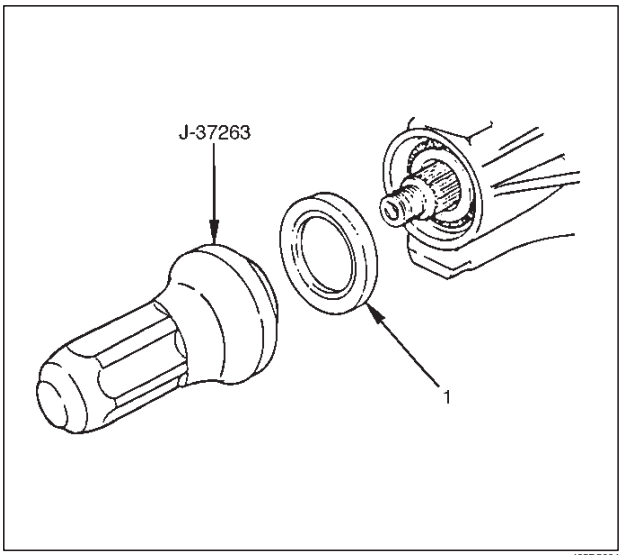

425RS004

4. Install flange.
5. Install flange nut and washer. Refer to Differential Assembly in this section for flange nut reassembly.

NOTE: Discard the used nut and install a new one.

Downloaded from www.Manualslib.com manuals search engine

Differential Assembly

Differential Assembly and Associated Parts

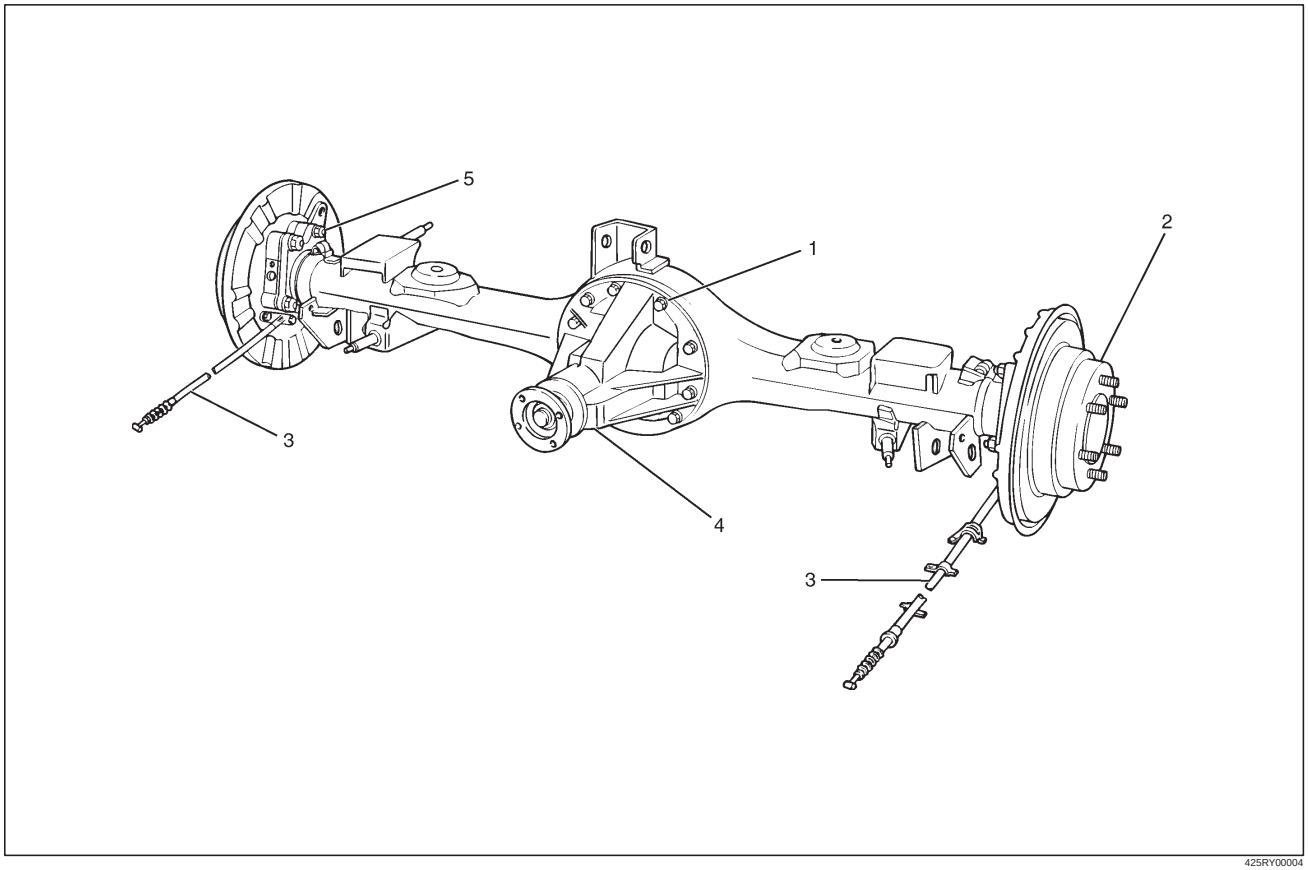

425RY00004

Legend

(1) Bolt and Nut
(2) Axle Shaft Assembly
(3) Parking Brake Cable
(4) Differential Assembly
(5) Nut

Removal

1. Jack up and support the frame with stands.
2. Remove the wheel and tire. Refer to Wheel in Steering section.
3. Drain the differential oil.
4. Remove the propeller shaft. Refer to Rear Propeller Shaft in this section.
5. Remove the ABS speed sensor. Refer to 4–Wheel Anti–lock Brake System (ABS) in Brake section.
6. Remove the parking brake cable fastening clip and disconnect the equalizer section. Refer to Parking Brakes in Brake section.
7. Remove the bearing holder fixing nuts.
8. Remove axle shaft assembly, be sure not to damage the oil seal by axle shaft.
9. Remove differential carrier mounting bolts and nuts.
10. Remove differential assembly.

Downloaded from www.Manualslib.com manuals search engine

Installation

1. Clean the contact surfaces of the axle and differential carrier. As shown in the drawing, apply Three Bond TB1215 or equivalent then install differential assembly.

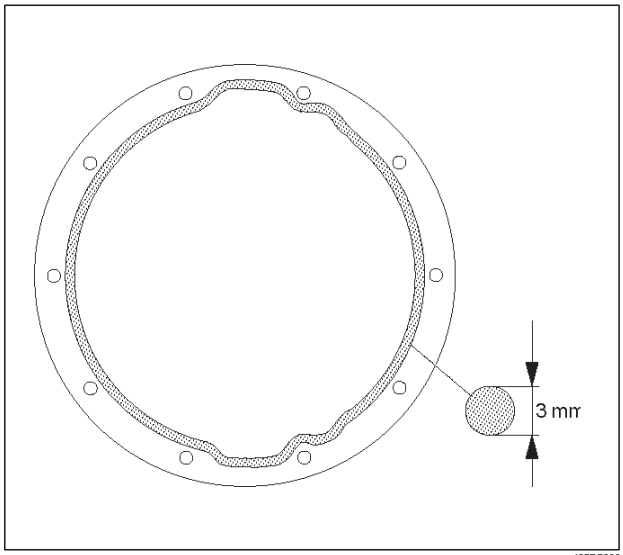

2. Install bolt and nut. Tighten the differential carrier mounting bolts and nuts to the specified torque.

   Torque:Nuts 44N·m (33lb ft)

   Bolts 66N·m (48lb ft)

3. Install axle shaft assembly. Be sure not to damage the oil seal by axle shaft.
4. Install nut, refer to Axle Shaft in this section.
5. Install parking brake cable, refer to Parking Brakes in Brake section.

NOTE: After completing the assembling work, fill the prescribed gear oil to the filler hole.

Lubricant capacity: 3.0 liter (3.2 US qt)

6. Tighten the oil filler plug to the specified torque.

   Torque: 78N·m (58lb ft)

Downloaded from www.Manualslib.com manuals search engine

Disassembled View

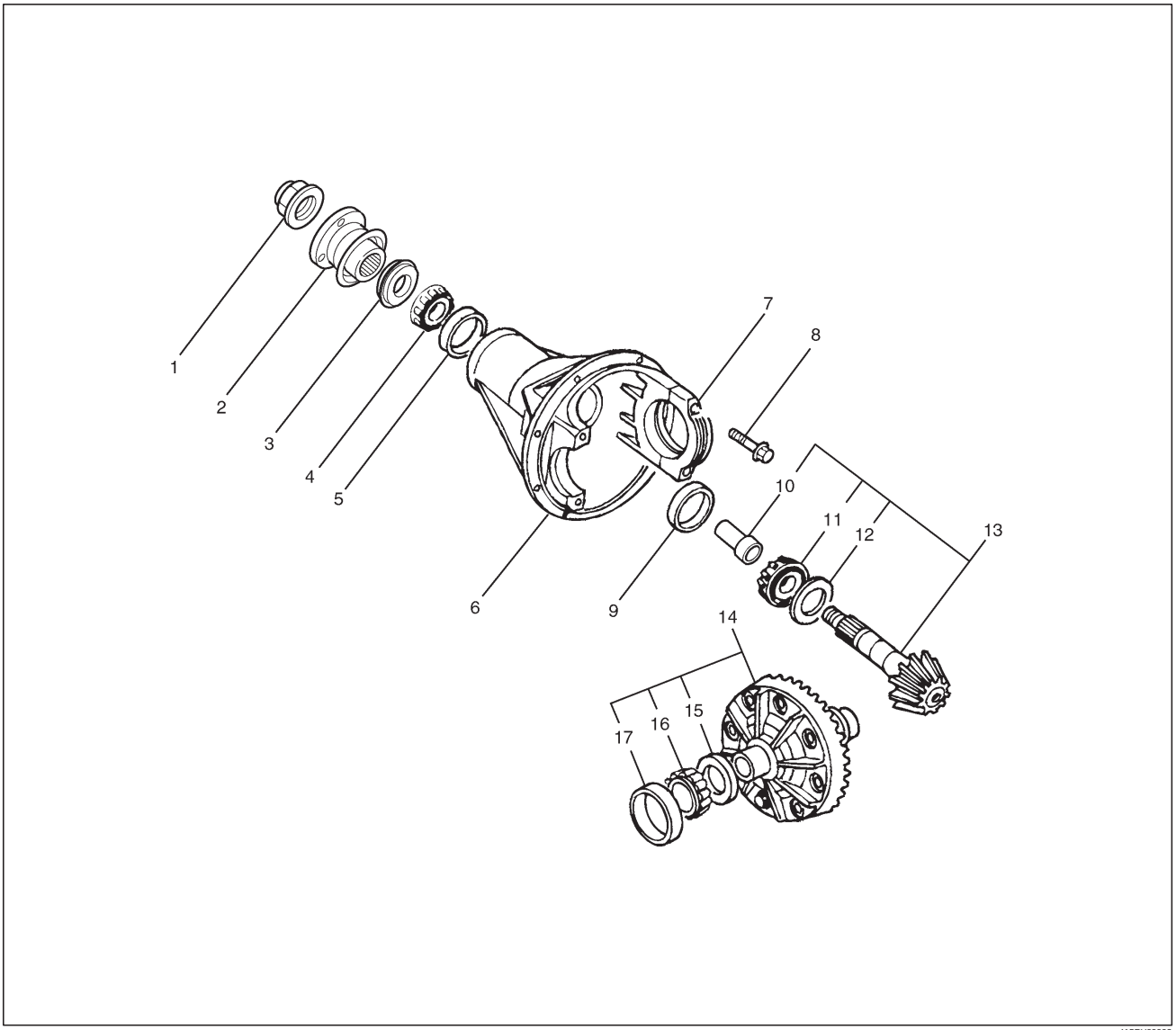

Legend

(1) Flange Nut and Washer
(2) Flange
(3) Oil Seal
(4) Oil Seal Slinger
(5) Outer Bearing
(6) Outer Bearing Outer Race
(7) Diff Carrier
(8) Bearing Cap
(9) Bolt
(10) Inner Bearing Outer Race
(11) Collapsible Spacer
(12) Inner Bearing
(13) Adjust Shim (Pinion Position)
(14) Drive Pinion Shaft
(15) Adjust Shim (Diff Cage Assembly)
(16) Diff Preload/Backlash
(17) Side Bearing
(18) Side Bearing Outer Race

Downloaded from www.Manualslib.com manuals search engine

Disassembly

1. Using holding fixture J–42832 and holding fixture base J–3289–20, fix the differential assembly to the bench.

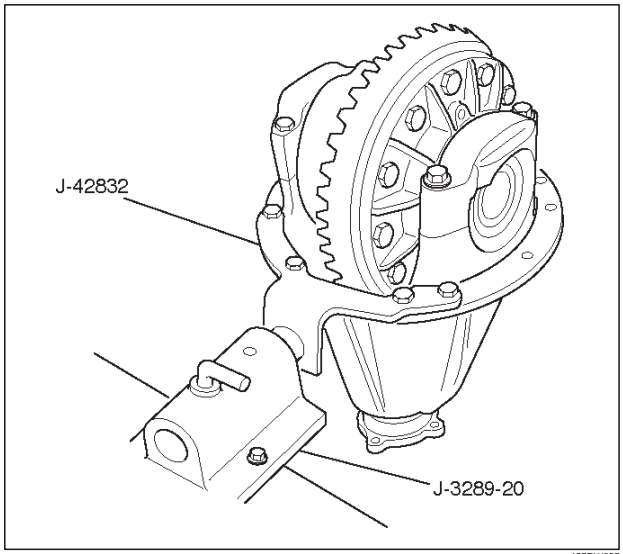

425RW035

2. Apply a setting mark to the side bearing cap and the differential carrier then remove bearing cap.

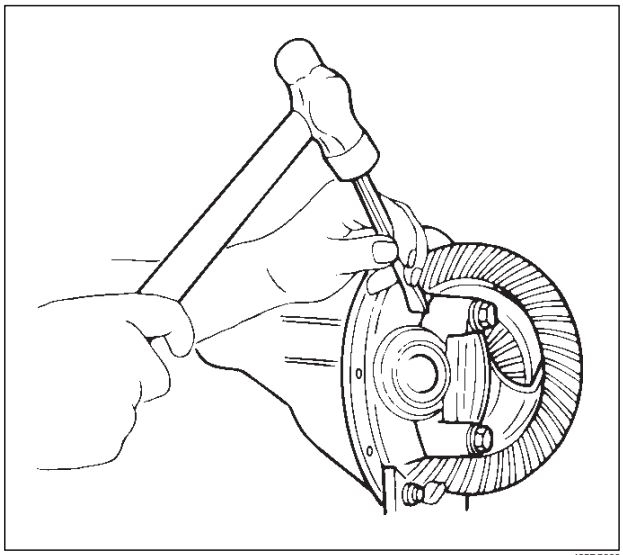

425RS009

3. Remove differential cage assembly.
4. Remove side bearing outer race. After removal, keep the right and left hand side bearing assemblies separate to maintain inner and outer race combinations.
5. Remove side bearing by using remover J–42379 and adapter J–8107–3. Select collet halves 44803 in remover kit J–42379 for side bearing removal and insert is not required for this operation.

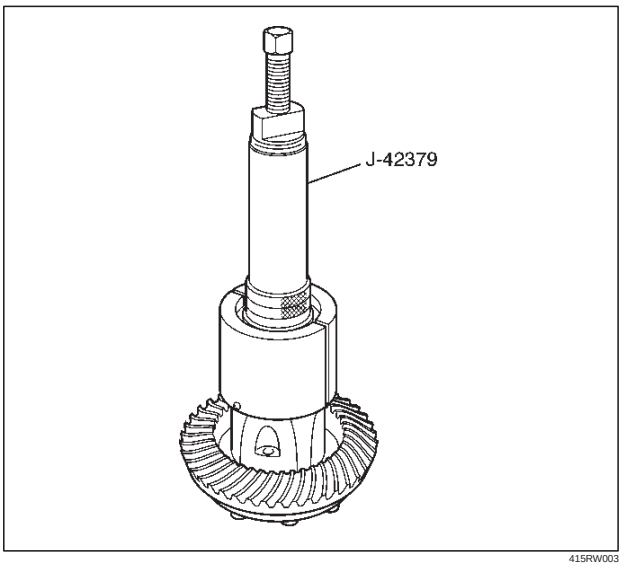

415RW003

6. Note the thickness and position of the shims then remove adjust shim.
7. Remove the flange nut and washer by using pinion flange holder J–8614–01 after raising up its staked parts completely.

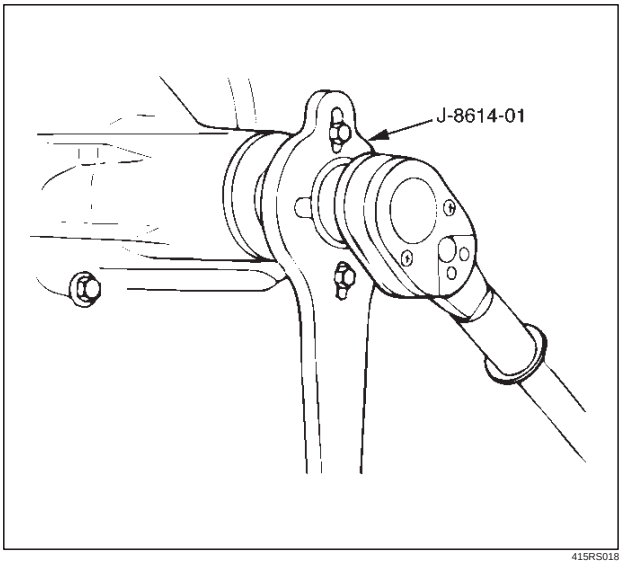

415RS018

Downloaded from www.Manualslib.com manuals search engine

8. Removed flange assembly.
9. Remove the drive pinion assembly using a soft metal rod and a hammer.

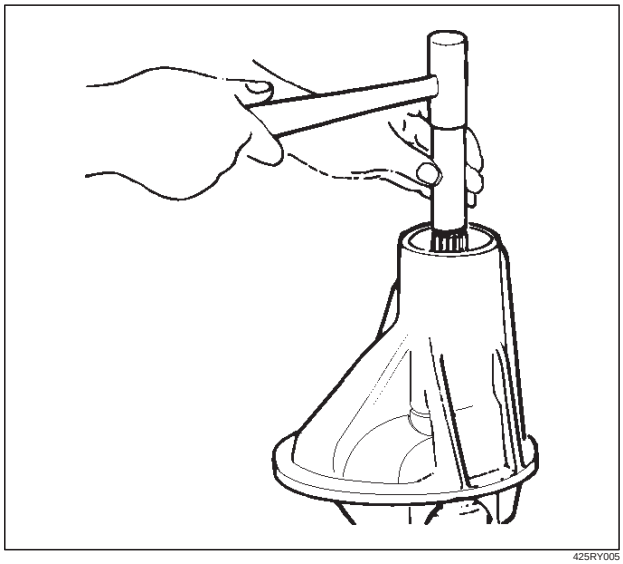

425RY005

10. Remove collapsible spacer.
11. Remove the inner bearing by using remover J–42379.Select insert 303174 and collet halves 44803 in remover kit J–42379 for inner bearing removal.

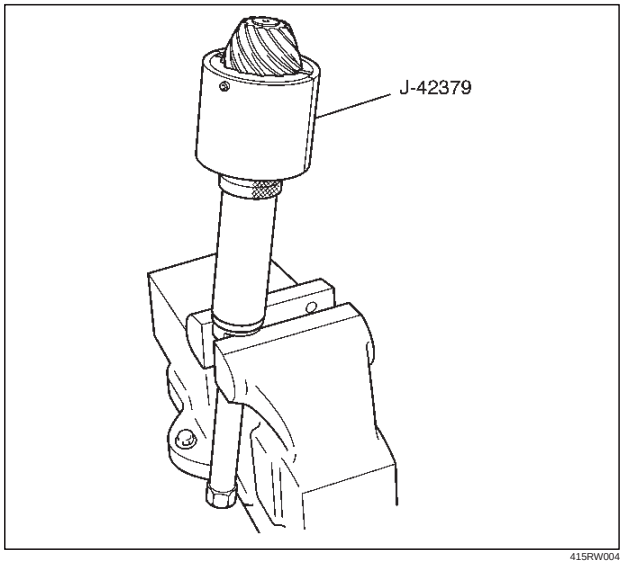

415RW004

12. Remove adjust shim.
13. Remove oil seal.
14. Remove oil seal slinger.
15. Remove outer bearing.
16. Remove the inner bearing outer race (1) and the outer bearing outer race (2) by using a brass bar and a hammer.

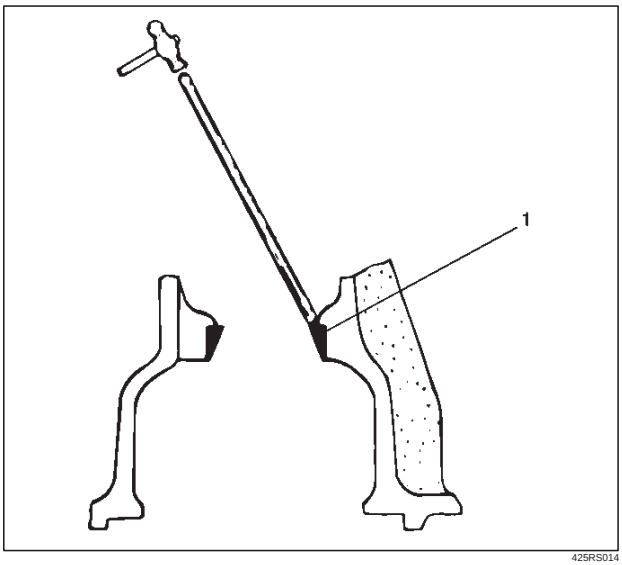

425RS014

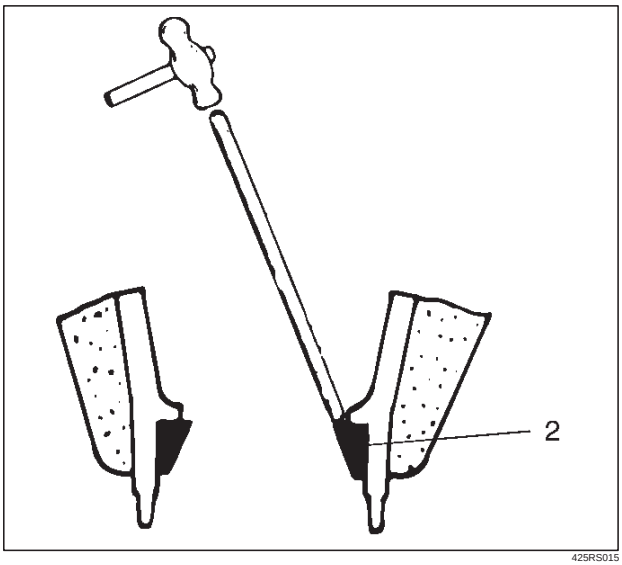

425RS015

Downloaded from www.Manualslib.com manuals search engine

Reassembly

1. Install outer bearing outer race by using installer J–44461 and grip J–8092.

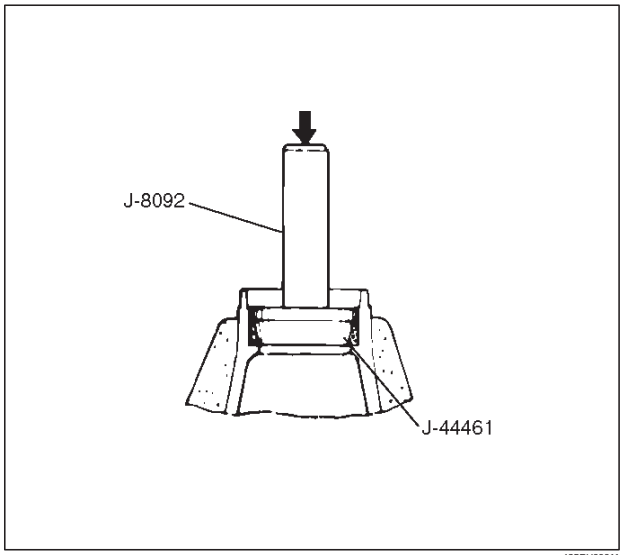

425RY00011

2. Install inner bearing outer race by using installer J–44462 and grip J–8092.

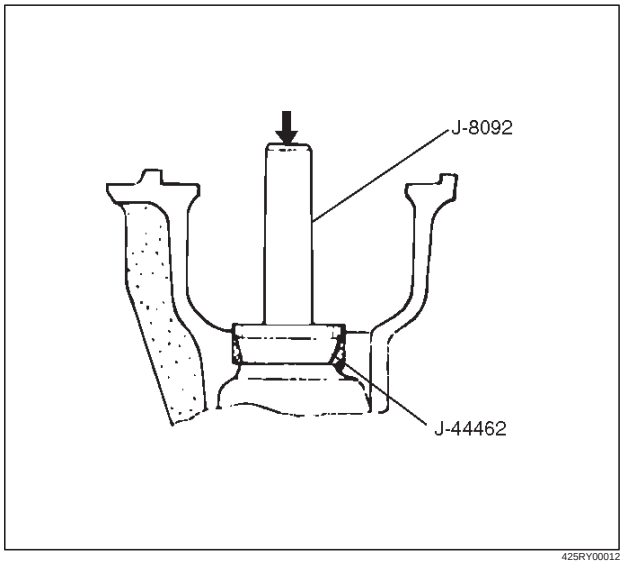

425RY00012

3. Adjust the drive pinion mounting distance as follows:
   1. Apply gear oil to the inner and outer drive pinion bearing. Clean the pinion setting gauge set. Then install the gauge set together with the inner and outer bearings.

   Install gauge plate J–42826 (3), inner pilot J–42827 (2) ,stud and nut J–21777–43 (4) and outer pilot J–42824 (1) through inner and outer bearings.

   2. Tighten the nut to the specified torque.

   Torque: 2.3 N·m (20 lb in)

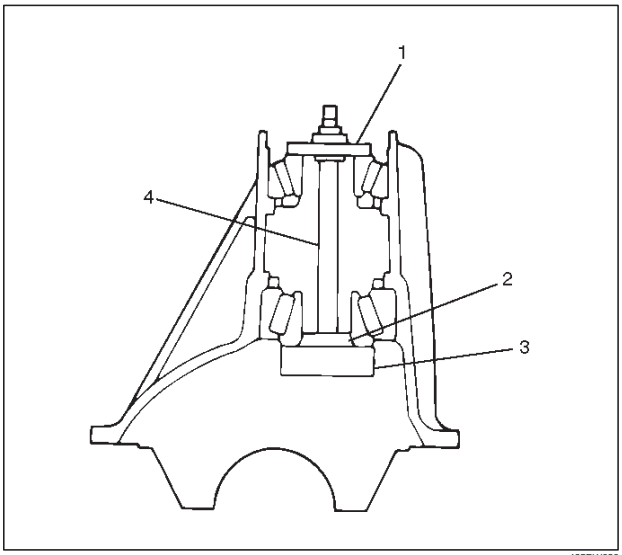

425RW030

   3. Clean the side bearing bores. Place discs and dial indicator on to arbor, and place tool into position in side bearing bores. Install and tighten the bearing caps to the specified torque.

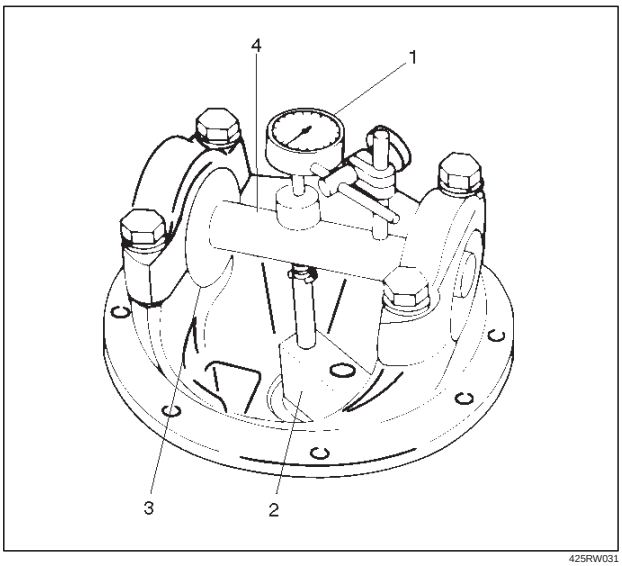

425RW031

Legend

(1) Dial Indicator: J–8001
(2) Gauge Plate: J–44451
(3) Disc (2 pcs.): J–44452
(4) Arbor: J–23597–1

Downloaded from www.Manualslib.com manuals search engine

4. Set the dial indicator J–8001 to “0”. Place it on the mounting post of the gauging arbor with the contact button touching the indicator pad. Force the dial indicator downward until the needle has made a half turn clockwise. Tighten down the dial indicator in this position.

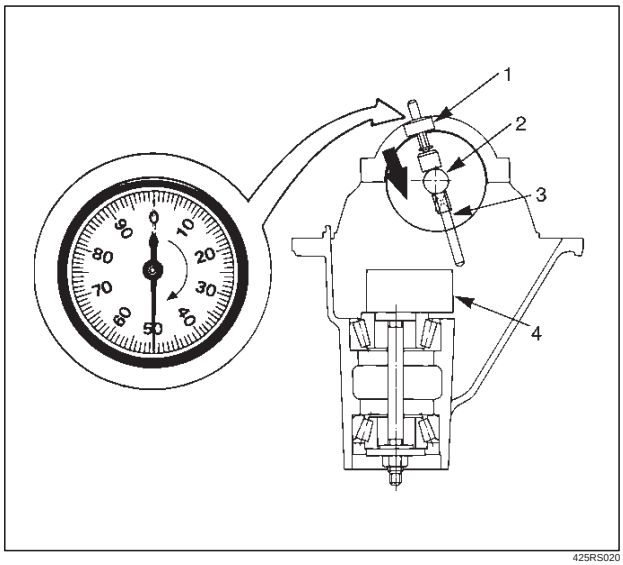

425RS020

Legend

(1) Dial Indicator
(2) Ganging Arbor
(3) Plunger
(4) Gauge Plate

5. Position the plunger on the gauge plate. Move the gauging arbor slowly back and forth and locate the position at which the dial indicator shows the greatest defection. At this point, once again set the dial indicator to “0”. Repeat the procedure to verify the “0” setting.

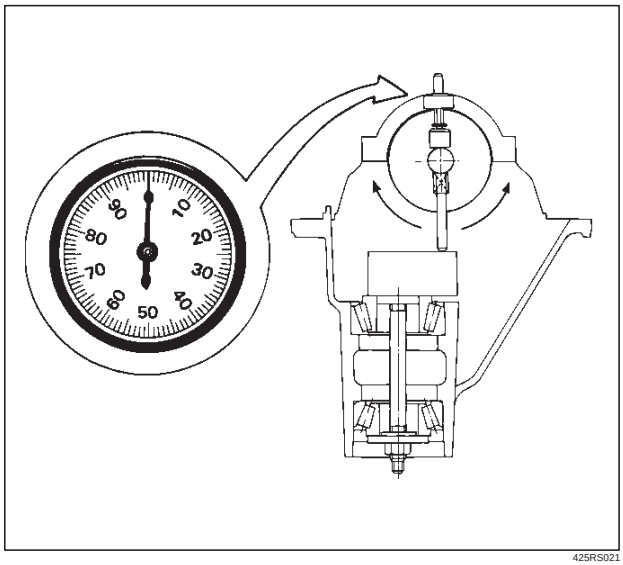

425RS021

6. After the ZERO setting is obtained, rotate the gauging arbor until the dial indicator rod does not touch the gauging plate. Record the number the dial indicator needle points to.

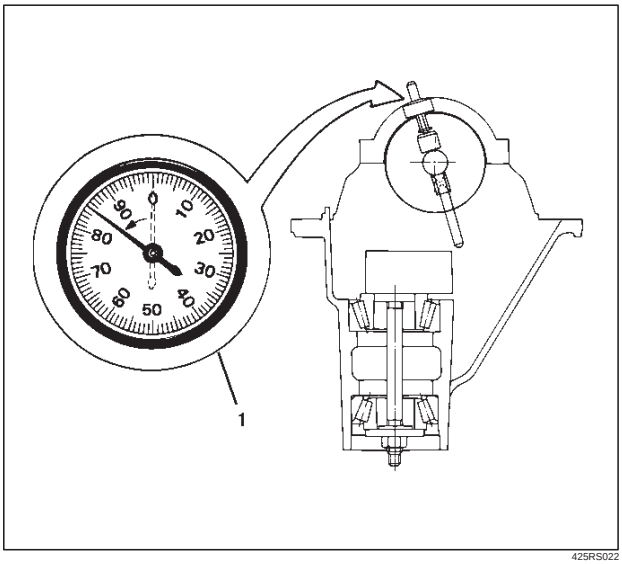

425RS022

Legend

(1) Example=Dial indicator reading od 0.085

7. Record the pinion depth code on the head of the drive pinion. The number indicates a necessary change in the pinion mounting distance. A plus number indicates the need for a greater mounting distance (which can be achieved by decreasing the shim thickness). A minus number indicates the need for a smaller mounting distance (which can be achieved by increasing the shim thickness). If examination reveals pinion depth code “0”, the pinion is “nominal”.

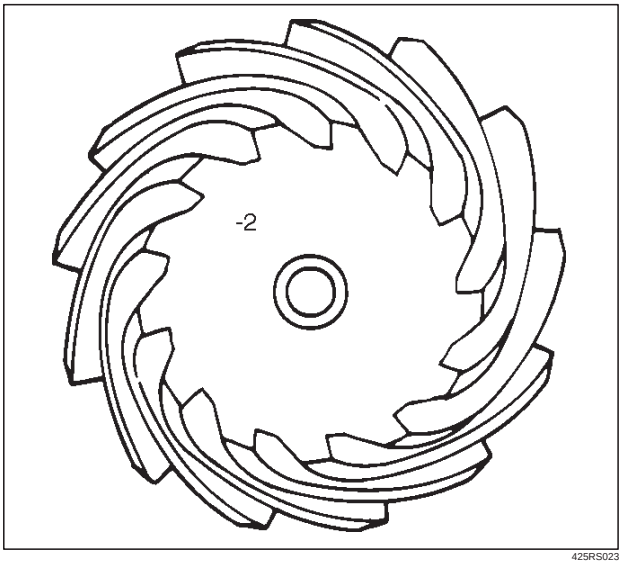

425RS023

Downloaded from www.Manualslib.com manuals search engine

8. Select the shim thickness using the chart;

Pinion marking Dial indicator reading (inches)	+10	+9	+8	+7	+6	+5	+4	+3	+2	+1	0	–1	–2	–3	–4	–5	–6	–7	–8	–9	–10
0.080																				2.12 (0.0835)	2.12 (0.0835)
0.081																	2.12 (0.0835)	2.12 (0.0835)	2.14 (0.0843)	2.14 (0.0843)	2.16 (0.0850)
0.082														2.12 (0.0835)	2.12 (0.0835)	2.14 (0.0843)	2.14 (0.0843)	2.16 (0.0850)	2.16 (0.0850)	2.18 (0.0858)	2.18 (0.0858)
0.083												2.12 (0.0835)	2.12 (0.0835)	2.14 (0.0843)	2.14 (0.0843)	2.16 (0.0850)	2.16 (0.0850)	2.18 (0.0858)	2.18 (0.0858)	2.20 (0.0866)	2.20 (0.0866)
0.084										2.12 (0.0835)	2.12 (0.0835)	2.14 (0.0843)	2.14 (0.0843)	2.16 (0.0850)	2.16 (0.0850)	2.18 (0.0858)	2.18 (0.0858)	2.20 (0.0866)	2.20 (0.0866)	2.22 (0.0874)	2.22 (0.0874)
0.085							2.12 (0.0835)	2.12 (0.0835)	2.14 (0.0843)	2.14 (0.0843)	2.16 (0.0850)	2.16 (0.0850)	2.18 (0.0858)	2.18 (0.0858)	2.20 (0.0866)	2.20 (0.0866)	2.22 (0.0874)	2.22 (0.0874)	2.24 (0.0822)	2.24 (0.0822)	2.26 (0.0890)
0.086				2.12 (0.0835)	2.12 (0.0835)	2.14 (0.0843)	2.14 (0.0843)	2.16 (0.0850)	2.16 (0.0850)	2.18 (0.0858)	2.18 (0.0858)	2.20 (0.0866)	2.20 (0.0866)	2.22 (0.0874)	2.22 (0.0874)	2.24 (0.0882)	2.24 (0.0882)	2.26 (0.0890)	2.26 (0.0890)	2.28 (0.0898)	2.28 (0.0898)
0.087		2.12 (0.0835)	2.12 (0.0835)	2.14 (0.0843)	2.14 (0.0843)	2.16 (0.0850)	2.16 (0.0850)	2.18 (0.0858)	2.18 (0.0858)	2.20 (0.0866)	2.20 (0.0866)	2.22 (0.0874)	2.22 (0.0874)	2.24 (0.0882)	2.24 (0.0882)	2.26 (0.0890)	2.26 (0.0890)	2.28 (0.0898)	2.28 (0.0898)	2.30 (0.0905)	2.30 (0.0905)
0.088	2.14 (0.0843)	2.14 (0.0843)	2.16 (0.0850)	2.16 (0.0850)	2.18 (0.0858)	2.18 (0.0858)	2.20 (0.0866)	2.20 (0.0866)	2.22 (0.0874)	2.22 (0.0874)	2.24 (0.0882)	2.24 (0.0882)	2.26 (0.0890)	2.26 (0.0890)	2.28 (0.0898)	2.28 (0.0898)	2.30 (0.0905)	2.30 (0.0905)	2.32 (0.0914)	2.32 (0.0914)	2.34 (0.0921)
0.089	2.16 (0.0850)	2.18 (0.0858)	2.18 (0.0858)	2.20 (0.0866)	2.20 (0.0866)	2.22 (0.0874)	2.22 (0.0874)	2.24 (0.0882)	2.24 (0.0882)	2.26 (0.0890)	2.26 (0.0890)	2.28 (0.0898)	2.28 (0.0898)	2.30 (0.0905)	2.30 (0.0905)	2.32 (0.0914)	2.32 (0.0914)	2.34 (0.0921)	2.34 (0.0921)	2.36 (0.0929)	2.36 (0.0929)
0.090	2.18 (0.0858)	2.20 (0.0866)	2.20 (0.0866)	2.22 (0.0874)	2.22 (0.0874)	2.24 (0.0882)	2.24 (0.0882)	2.26 (0.0890)	2.26 (0.0890)	2.28 (0.0898)	2.28 (0.0898)	2.30 (0.0905)	2.30 (0.0905)	2.32 (0.0914)	2.32 (0.0914)	2.34 (0.0921)	2.34 (0.0921)	2.36 (0.0929)	2.36 (0.0929)	2.38 (0.0937)	2.38 (0.0937)
0.091	2.20 (0.0866)	2.22 (0.0874)	2.22 (0.0874)	2.24 (0.0882)	2.24 (0.0882)	2.26 (0.0890)	2.26 (0.0890)	2.28 (0.0898)	2.28 (0.0898)	2.30 (0.0905)	2.30 (0.0905)	2.32 (0.0914)	2.32 (0.0914)	2.34 (0.0921)	2.34 (0.0921)	2.36 (0.0929)	2.36 (0.0929)	2.38 (0.0937)	2.38 (0.0937)	2.40 (0.0945)	2.40 (0.0945)
0.092	2.24 (0.0882)	2.24 (0.0882)	2.26 (0.0890)	2.26 (0.0890)	2.28 (0.0898)	2.28 (0.0898)	2.30 (0.0905)	2.30 (0.0905)	2.32 (0.0914)	2.32 (0.0914)	2.34 (0.0921)	2.34 (0.0921)	2.36 (0.0929)	2.36 (0.0929)	2.38 (0.0937)	2.38 (0.0937)	2.40 (0.0945)	2.40 (0.0945)	2.42 (0.0953)	2.42 (0.0953)	2.44 (0.0961)
0.093	2.26 (0.0890)	2.28 (0.0898)	2.28 (0.0898)	2.30 (0.0905)	2.30 (0.0905)	2.32 (0.0914)	2.32 (0.0914)	2.34 (0.0921)	2.34 (0.0921)	2.36 (0.0929)	2.36 (0.0929)	2.38 (0.0937)	2.38 (0.0937)	2.40 (0.0945)	2.40 (0.0945)	2.42 (0.0953)	2.42 (0.0953)	2.44 (0.0961)	2.44 (0.0961)	2.46 (0.0969)	2.46 (0.0969)
0.094	2.28 (0.0898)	2.30 (0.0905)	2.30 (0.0905)	2.32 (0.0914)	2.32 (0.0914)	2.34 (0.0921)	2.34 (0.0921)	2.36 (0.0929)	2.36 (0.0929)	2.38 (0.0937)	2.38 (0.0937)	2.40 (0.0945)	2.40 (0.0945)	2.42 (0.0953)	2.42 (0.0953)	2.44 (0.0961)	2.44 (0.0961)	2.46 (0.0969)	2.46 (0.0969)	2.48 (0.0977)	2.48 (0.0977)
0.095	2.30 (0.0905)	2.32 (0.0914)	2.32 (0.0914)	2.34 (0.0921)	2.34 (0.0921)	2.36 (0.0929)	2.36 (0.0929)	2.38 (0.0937)	2.38 (0.0937)	2.40 (0.0945)	2.40 (0.0945)	2.42 (0.0953)	2.42 (0.0953)	2.44 (0.0961)	2.44 (0.0961)	2.46 (0.0969)	2.46 (0.0969)	2.48 (0.0977)	2.48 (0.0977)	2.50 (0.0987)	2.50 (0.0987)
0.096	2.34 (0.0921)	2.34 (0.0921)	2.36 (0.0929)	2.36 (0.0929)	2.38 (0.0937)	2.38 (0.0937)	2.40 (0.0945)	2.40 (0.0945)	2.42 (0.0953)	2.42 (0.0953)	2.44 (0.0961)	2.44 (0.0961)	2.46 (0.0969)	2.46 (0.0969)	2.48 (0.0977)	2.48 (0.0977)	2.50 (0.0987)	2.50 (0.0987)	2.52 (0.0992)	2.52 (0.0992)	2.54 (0.1000)
0.097	2.36 (0.0929)	2.38 (0.0937)	2.38 (0.0937)	2.40 (0.0945)	2.40 (0.0945)	2.42 (0.0953)	2.42 (0.0953)	2.44 (0.0961)	2.44 (0.0961)	2.46 (0.0969)	2.46 (0.0969)	2.48 (0.0977)	2.48 (0.0977)	2.50 (0.0984)	2.50 (0.0984)	2.52 (0.0992)	2.52 (0.0922)	2.54 (0.1000)	2.54 (0.1000)	2.56 (0.1008)	2.56 (0.1008)
0.098	2.38 (0.0937)	2.40 (0.0945)	2.40 (0.0945)	2.42 (0.0953)	2.42 (0.0953)	2.44 (0.0961)	2.44 (0.0961)	2.46 (0.0969)	2.46 (0.0969)	2.48 (0.0977)	2.48 (0.0977)	2.50 (0.0984)	2.50 (0.0984)	2.52 (0.0992)	2.52 (0.0922)	2.54 (0.1000)	2.54 (0.1000)	2.56 (0.1008)	2.56 (0.1008)	2.58 (0.1016)	2.58 (0.1016)
0.099	2.42 (0.0953)	2.42 (0.0953)	2.44 (0.0961)	2.44 (0.0961)	2.46 (0.0969)	2.46 (0.0969)	2.48 (0.0977)	2.48 (0.0977)	2.50 (0.0984)	2.50 (0.0984)	2.52 (0.0992)	2.52 (0.0922)	2.54 (0.1000)	2.54 (0.1000)	2.56 (0.1008)	2.56 (0.1008)	2.58 (0.1016)	2.58 (0.1016)			
0.000	2.44 (0.0961)	2.46 (0.0969)	2.46 (0.0969)	2.48 (0.0977)	2.48 (0.0977)	2.50 (0.0984)	2.50 (0.0984)	2.52 (0.0992)	2.52 (0.0922)	2.54 (0.1000)	2.54 (0.1000)	2.56 (0.1008)	2.56 (0.1008)	2.58 (0.1016)	2.58 (0.1016)						
0.001	2.46 (0.0969)	2.48 (0.0977)	2.48 (0.0977)	2.50 (0.0984)	2.50 (0.0984)	2.52 (0.0992)	2.52 (0.0922)	2.54 (0.1000)	2.54 (0.1000)	2.56 (0.1008)	2.56 (0.1008)	2.58 (0.1016)	2.58 (0.1016)								
0.002	2.48 (0.0977)	2.50 (0.0984)	2.50 (0.0984)	2.52 (0.0992)	2.52 (0.0922)	2.54 (0.1000)	2.54 (0.1000)	2.56 (0.1008)	2.56 (0.1008)	2.58 (0.1016)	2.58 (0.1016)										
0.003	2.52 (0.0992)	2.52 (0.0922)	2.54 (0.1000)	2.54 (0.1000)	2.56 (0.1008)	2.56 (0.1008)	2.58 (0.1016)	2.58 (0.1016)													
0.004	2.54 (0.1000)	2.56 (0.1008)	2.56 (0.1008)	2.58 (0.1016)	2.58 (0.1016)																
0.005	2.56 (0.1008)	2.58 (0.1016)	2.58 (0.1016)																		
0.006	2.58 (0.1016)																				

Downloaded from www.Manualslib.com manuals search engine

4. Place the shim (1) on the drive pinion, then install the inner bearing (2) onto the pinion by using installer J–42828 and a press .

NOTE: Do not apply pressure to the roller cage. Apply pressure only to the inner race.

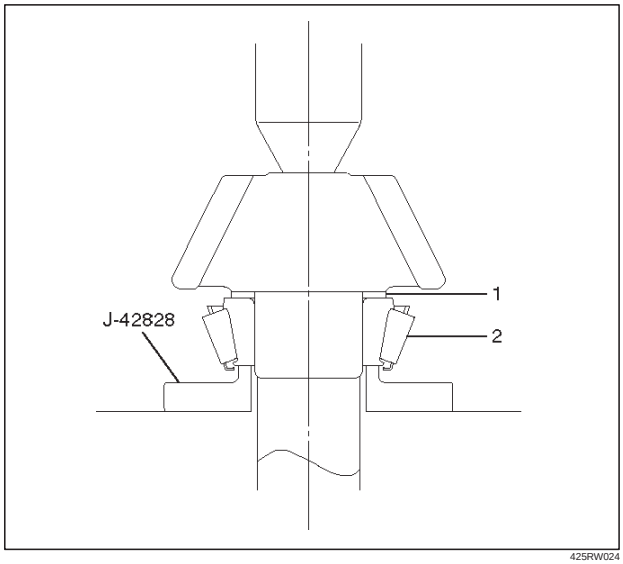

425RW024

5. Install collapsible spacer. Discard the used collapsible spacer and install a new one.
6. Install drive pinion shaft assembly.
7. Install outer bearing and oil seal slinger.
8. Use oil seal installer J–37263 to install a new oil seal that has grease on seal lip.

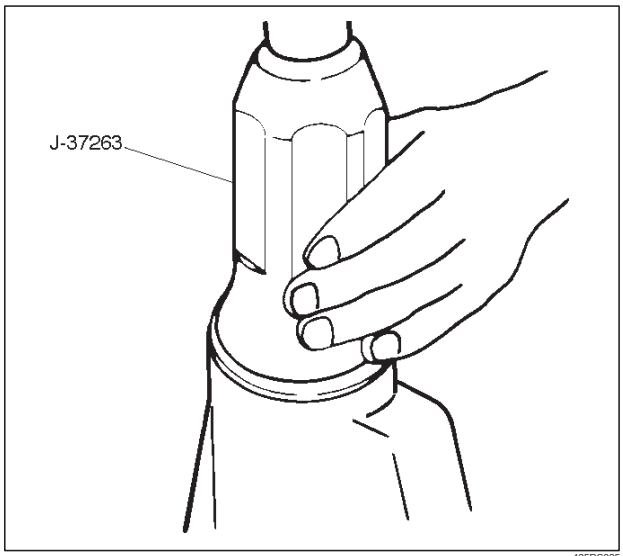

425RS025

9. Install flange assembly.
10. Install flange nut and washer.
    1. Apply lubricant to the pinion threads.
    2. Using the pinion flange holder J–8614–01, tighten the nut only enough to remove the shaft end play.

NOTE: Discard used flange nut and install new one.

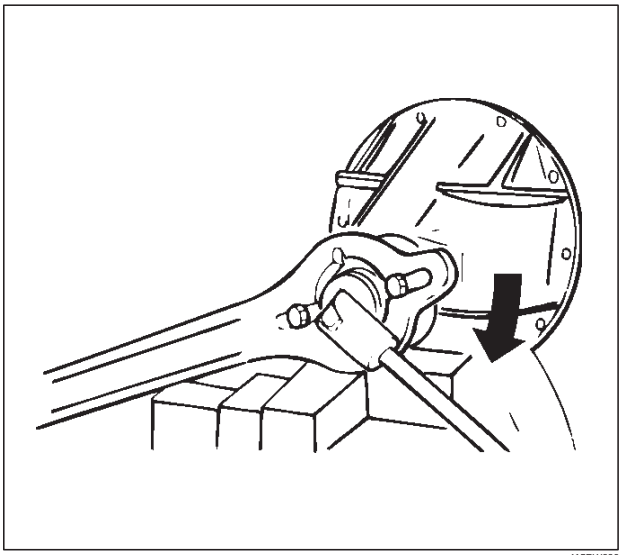

415RW006

3. Adjust pinion bearing preload.
   a. Measure the bearing preload by using a torque meter and note the scale reading required to rotate the flange.
   b. Continue tightening flange nut until the specified starting torque is obtained.

Starting torque: 1.1–1.6 N·m (10–14 lb in)

NOTE:

a. Do not overtighten or loosen and then retighten the nut.
b. Pinion nut torque should be in the range of 298–380 N·m (220–281 lb ft).

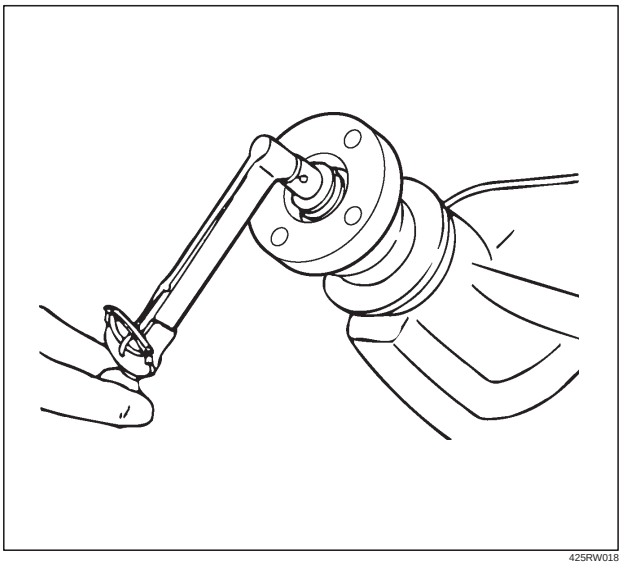

425RW018

Downloaded from www.Manualslib.com manuals search engine

4. Using punch J–39209, stake the flange nut at two points.

NOTE: When staking, be sure to turn the nut to ensure that there is no change in bearing preload. Make sure of preload again as instructed in 3).

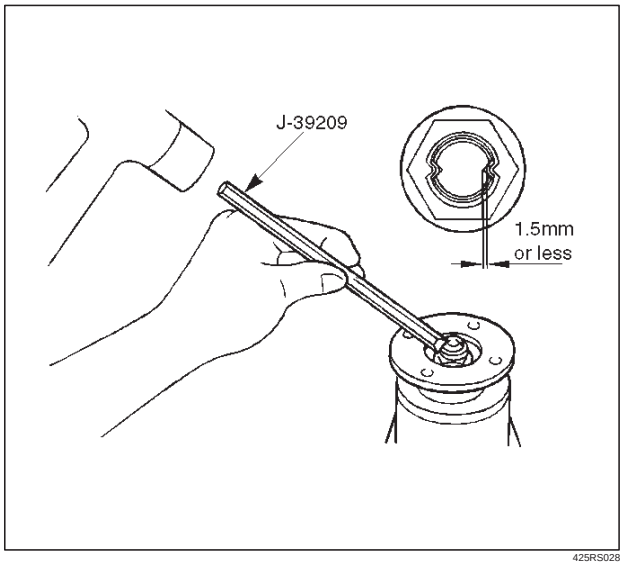

425RS028

11. Adjust ring gear backlash.
    1. Attach the side bearing to the differential assembly without shims by using installer J–42829 and grip J–8092.

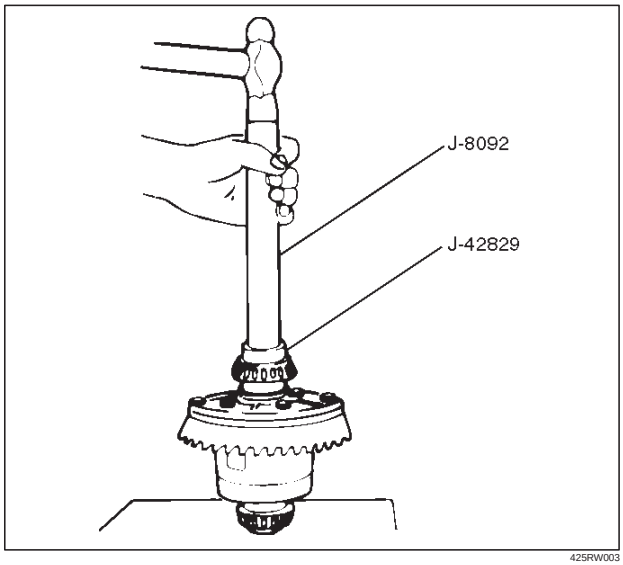

425RW003

2. Insert the differential cage assembly with bearing outer races into the side bearing bores of the carrier.

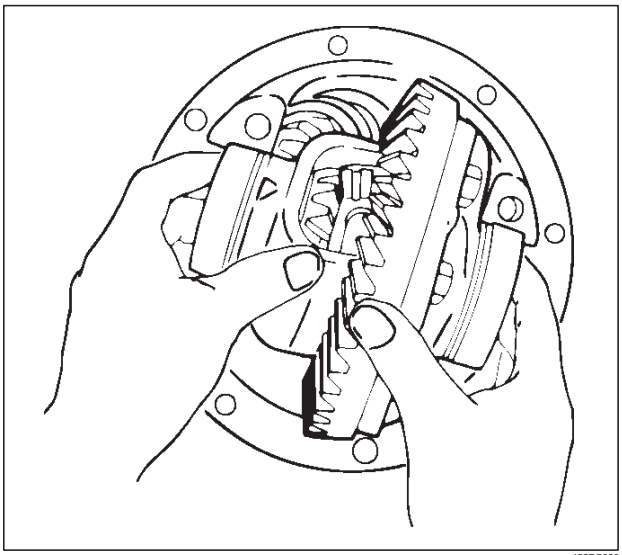

425RS030

3. Using two sets of feeler gauges, insert a feeler stock of sufficient thickness between each bearing outer race and the carrier to remove all end play. Make certain the feeler stock is pushed to the bottom of the bearing bores.

Mount the dial indicator J–8001 on the carrier so that the indicator stem is at right angles to a tooth on the ring gear.

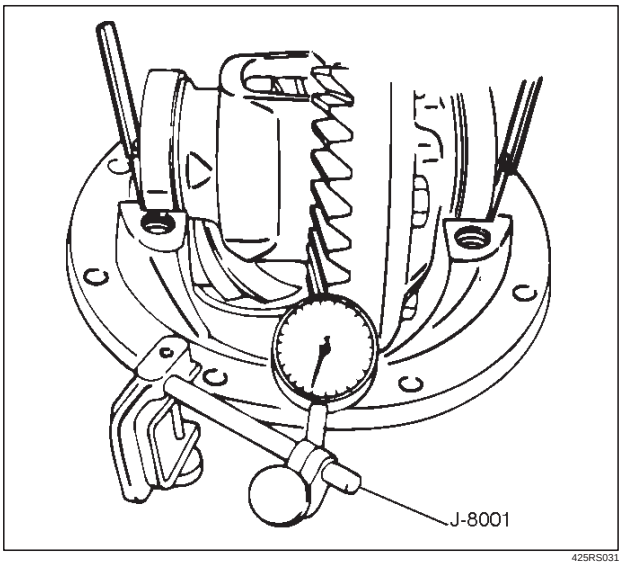

425RS031

Downloaded from www.Manualslib.com manuals search engine

4. Adjust feeler gauge thickness from side to side until ring gear backlash is in the specified range.

Backlash: 0.13– 0.2mm (0.005– 0.008in)

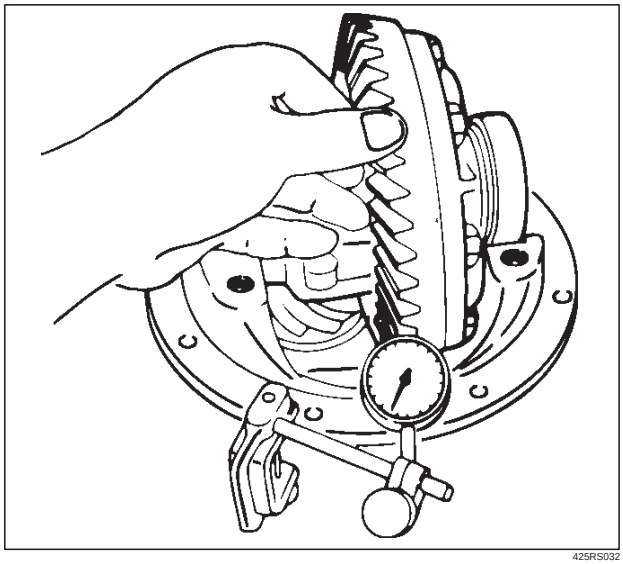

425RS032

With zero end play and correct backlash established, remove the feeler gauge packs, determine the thickness of the shims required and add 0.05 mm (0.002 in) to each shim pack to provide side bearing preload. Always use new shims.

5. Remove side bearing by using remover J–42379 and adapter J–8107–3.

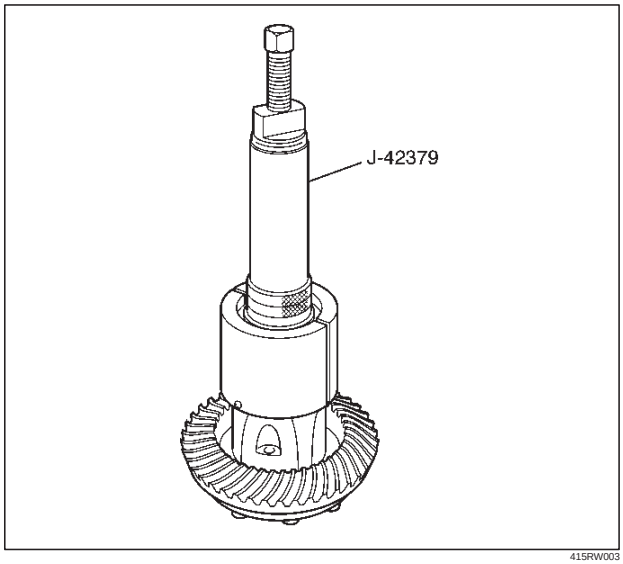

415RW003

12. Install the side bearings together with the selected shims by using installer J–42829 (2) and grip J–8092 (1).

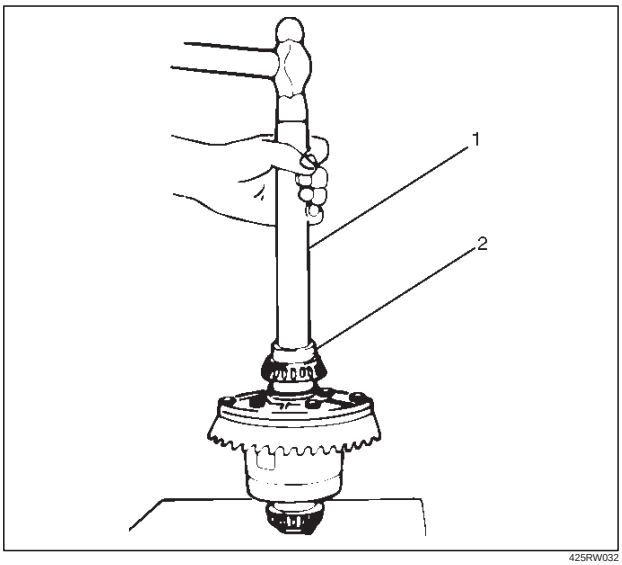

425RW032

13. Install side bearing outer race.
14. Install differential cage assembly.
15. Align the setting marks (1) applied at disassembly then install the bearing cap.

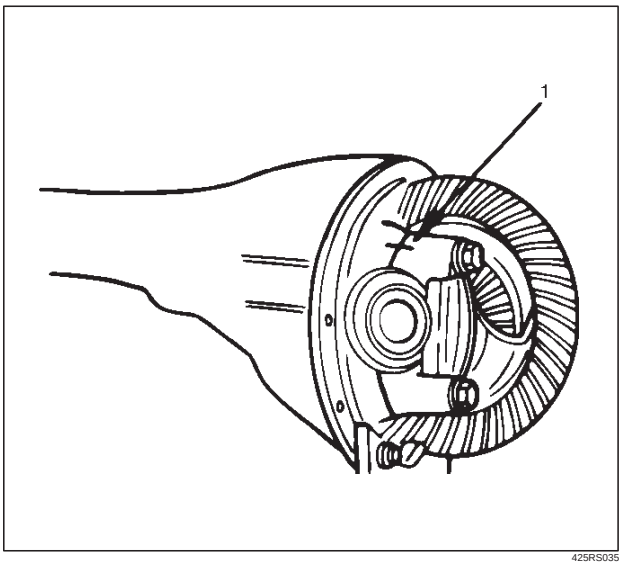

425RS035

Downloaded from www.Manualslib.com manuals search engine

16. Tighten the bolt to the specified torque.

Torque:108N·m (80lb ft)

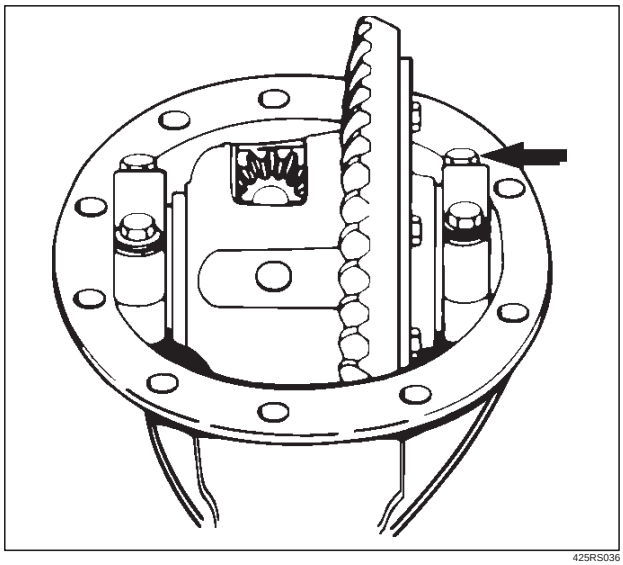

425RS036

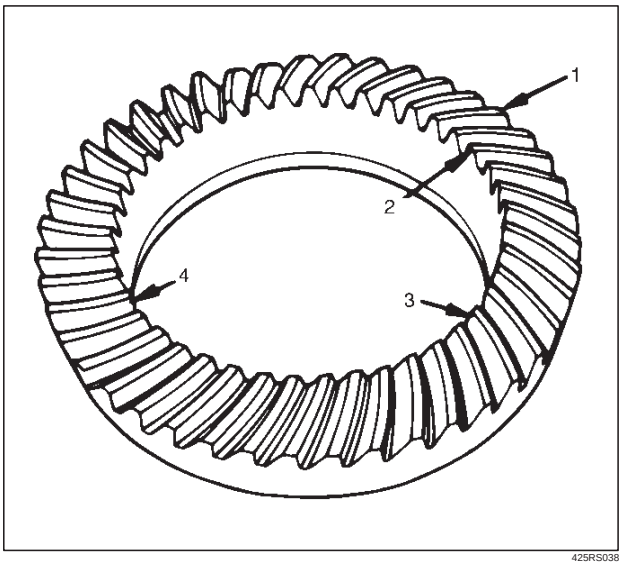

425RS038

Legend

(1) Heel
(2) Toe
(3) Concave Side(Coast)
(4) Convex Side(Drive)

Gear Tooth Contact Pattern Check and Adjustment

1. Apply a thin coat of Prussian blue or equivalent to the faces of the 7–8 teeth of the ring gear. Check the impression of contact on the ring gear teeth and make necessary adjustment as described in illustration if the contact is abnormal.

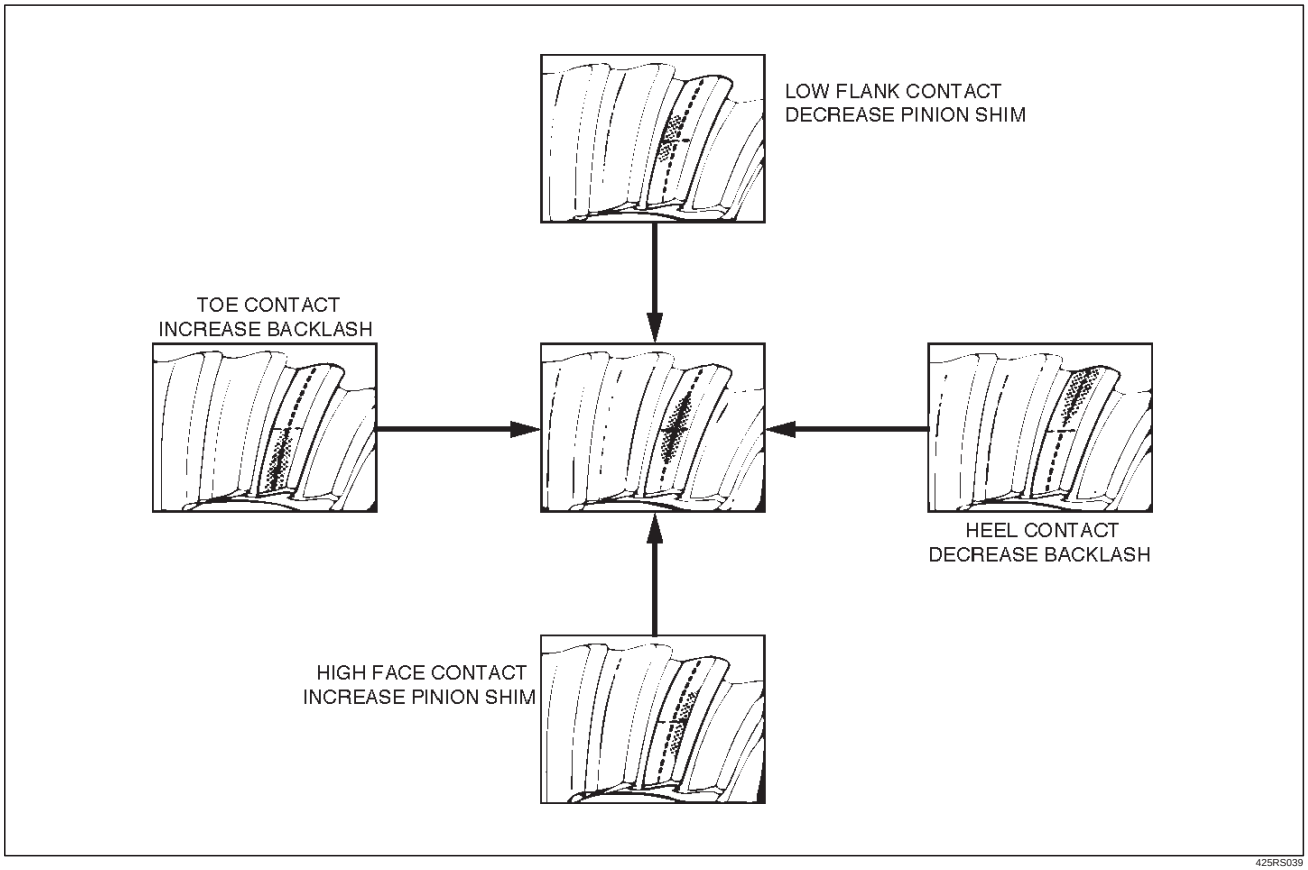

425RS039

Downloaded from www.Manualslib.com manuals search engine

Differential Cage Assembly

Disassembled View

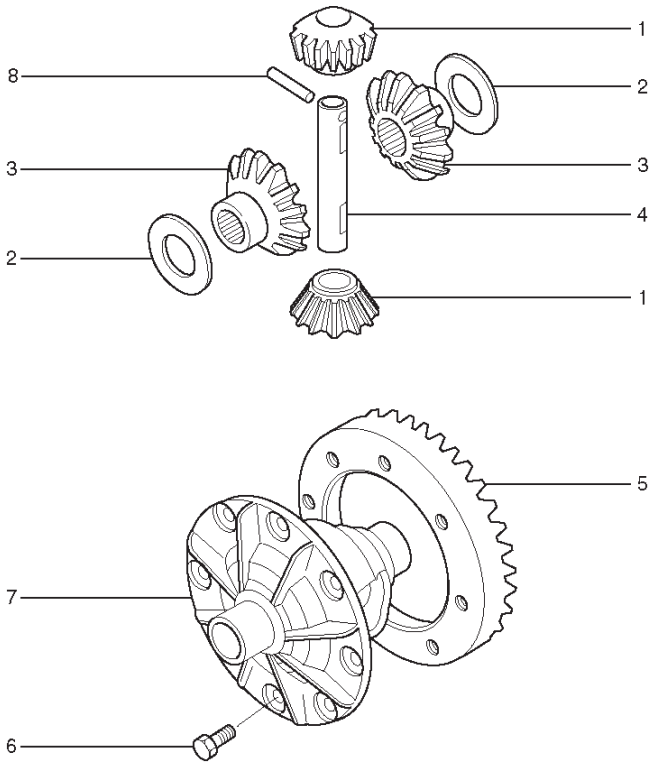

415RY00001

Legend

(1) Pinion Mate Gear
(2) Thrust Washer(for Side Gear)
(3) Side Gear
(4) Differential Shaft
(5) Ring Gear
(6) Bolt
(7) Differention Cage
(8) Lock Pin

Downloaded from www.Manualslib.com manuals search engine

Disassembly

1. Remove bolt.
2. Remove ring gear.
3. Remove lock pin using a small drift.

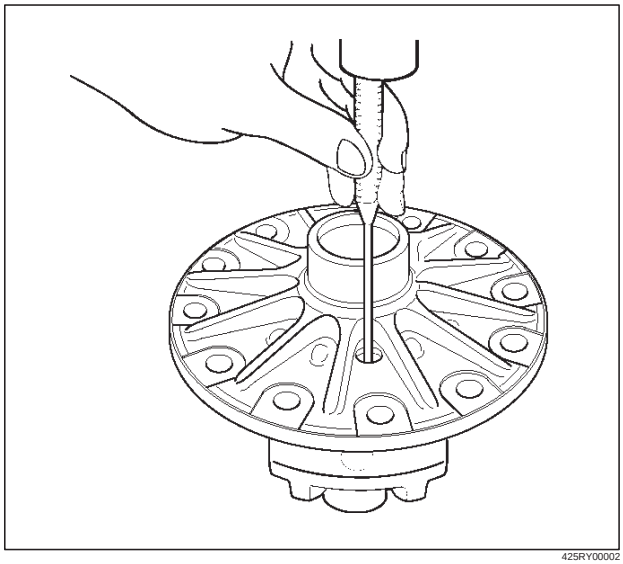

425RY00002

4. Remove the differential shaft by using a hard metal rod and a hammer.

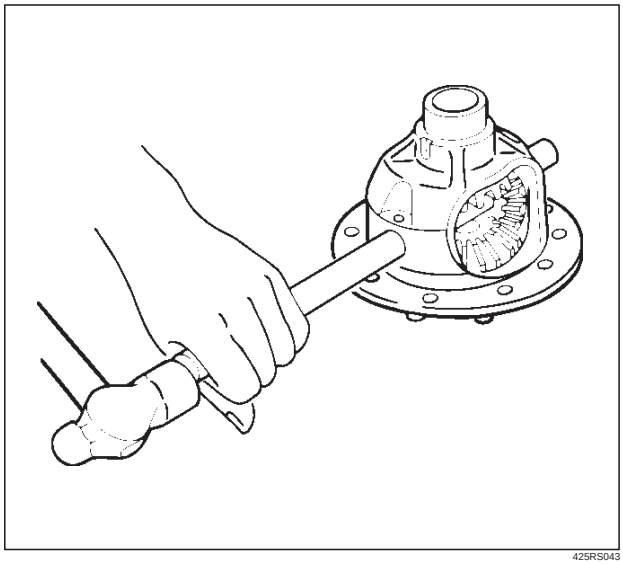

425RS043

5. Remove pinion mate gear and thrust washer.
6. Remove side gear and thrust washer.

Inspection and Repair

Make necessary correction or parts replacement if wear, damage, corrosion or any other abnormal conditions are found through inspection.
Check the following parts:

- Ring gear, pinion gear
- Bearing
- Side gear, pinion mate gear, differential shaft
- Differential cage, carrier
- Thrust washer
- Oil seal

Ring gear replacement:

1. The ring gear should always be replaced with the drive pinion as a set.
2. Clean the ring gear threaded holes to remove the locking agent.
3. Discard used bolts and install new ones.
4. When installing the ring gear, apply LOCTITE 271 or equivalent to all the threaded area and half of the unthreaded area of the bolt.

   Torque: 127N·m (94 lb ft)

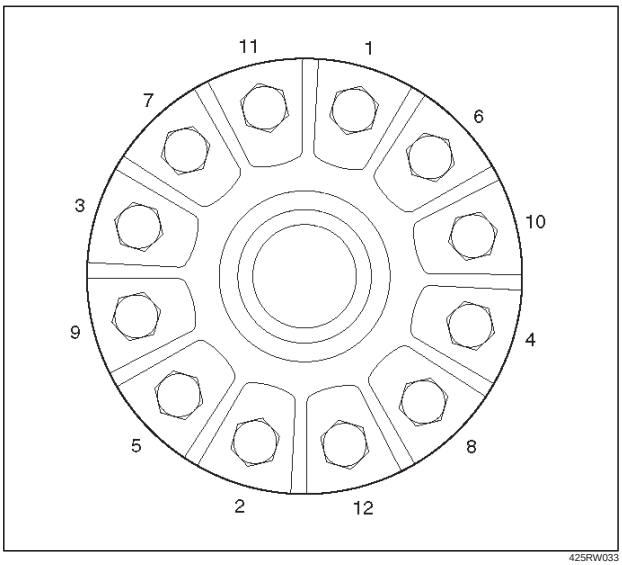

425RW033

Clearance between the differential pinion and the pinion shaft measurement.

Standard: 0.07 – 0.13 mm (0.003 – 0.005 in)

Limit: 0.2 mm (0.008 in)

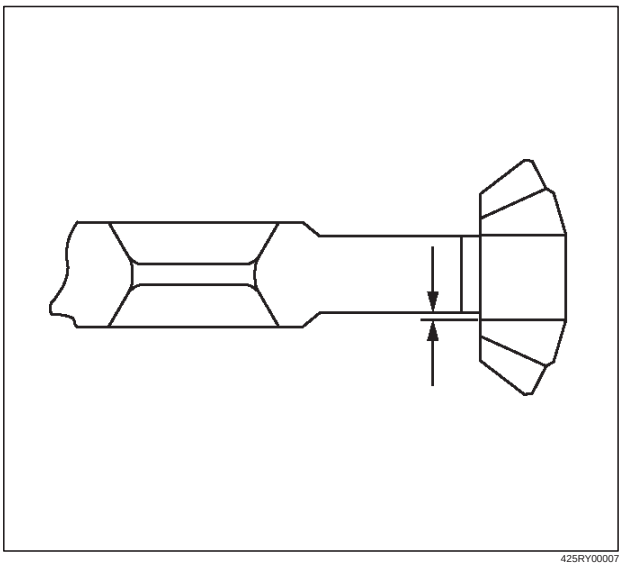

425RY00007

Downloaded from www.Manualslib.com manuals search engine

Clearance between the side gear and the differential box.

Standard: 0.032 – 0.105 mm (0.001 – 0.004 in)

Limit: 0.105 mm (0.004 in)

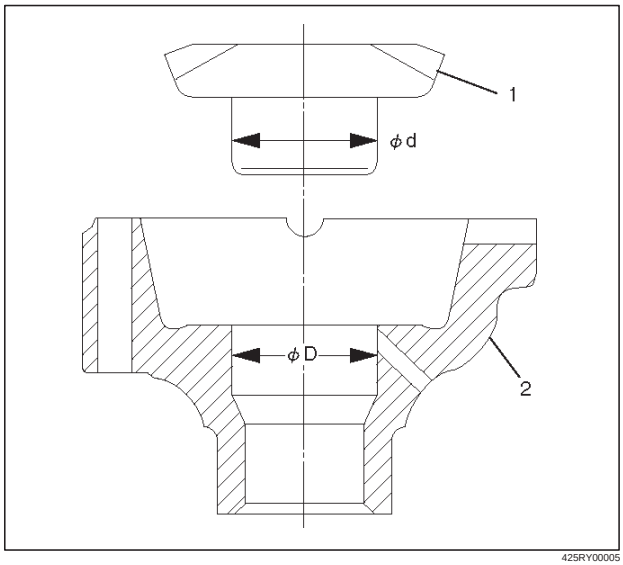

425RY00005

Legend

(1) Side gear
(2) Differential box

Play in splines between the side gear and the axle shaft.

Standard: 0.07 – 0.38 mm (0.003 – 0.014 in)

Limit: 0.5 mm (0.02 in)

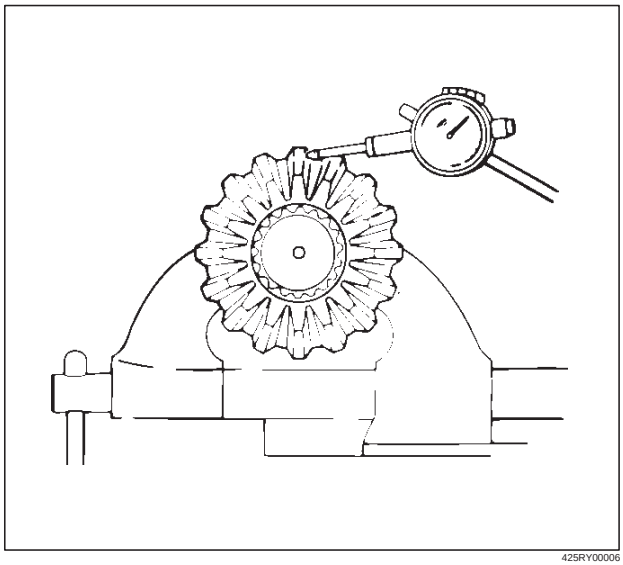

425RY00006

Reassembly

Differential cage
Thrust washer
Side gear
Pinion gear

1. Install the pinion gear by engaging it with the side gears while turning both pinion gears simultaneously in the same direction.
2. Install the pinion mate gear with thrust washer by engaging it with the side gears while turning both pinion mate gears simultaneously in the same direction.

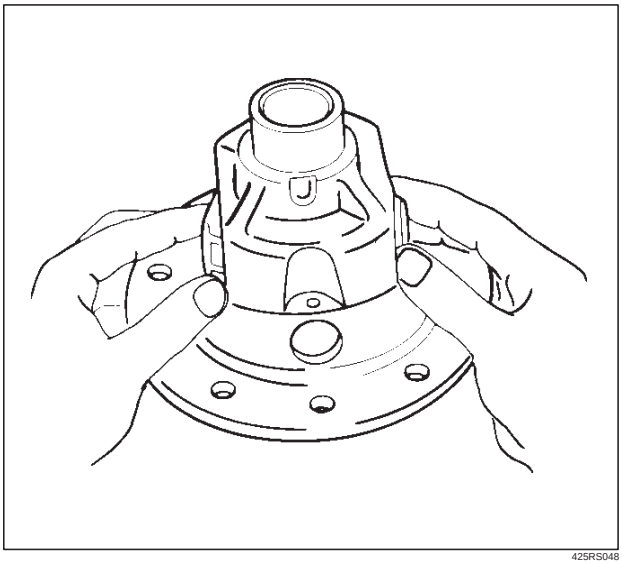

425RS048

3. Install differential shaft.
   1. Be sure to install the differential shaft so that it is in alignment with the lock pin hole in the differential cage.

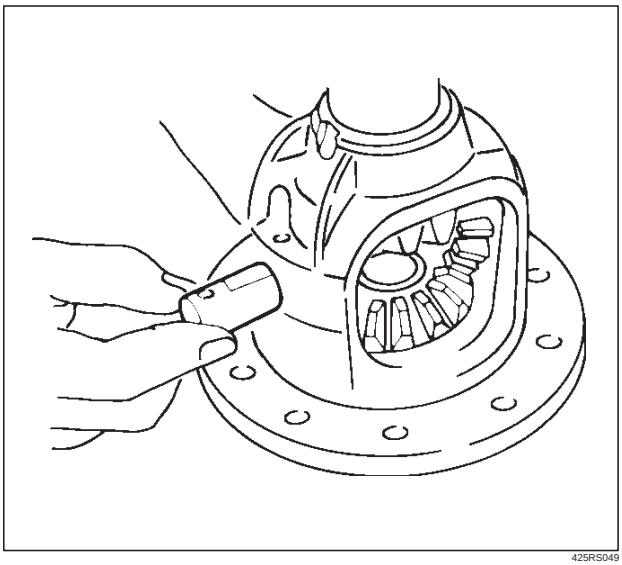

425RS049

Downloaded from www.Manualslib.com manuals search engine

2. Adjust the backlash between the side gear and the pinion gear.

Backlash: 0.15 – 0.20 mm (0.006 – 0.008 in)

Thickness of thrust washers available

mm	0.80	0.90	1.00	1.10	1.20	1.30
in	0.031	0.035	0.039	0.043	0.047	0.051

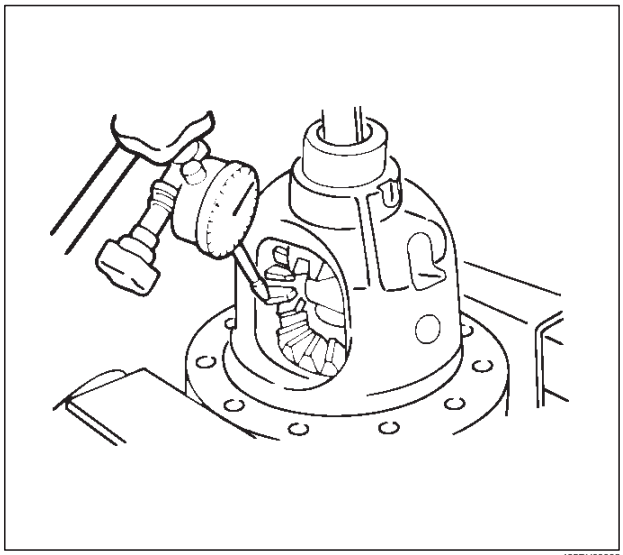

425RY00008

4. Install lock pin.
   - Install the lock pin using small drift.

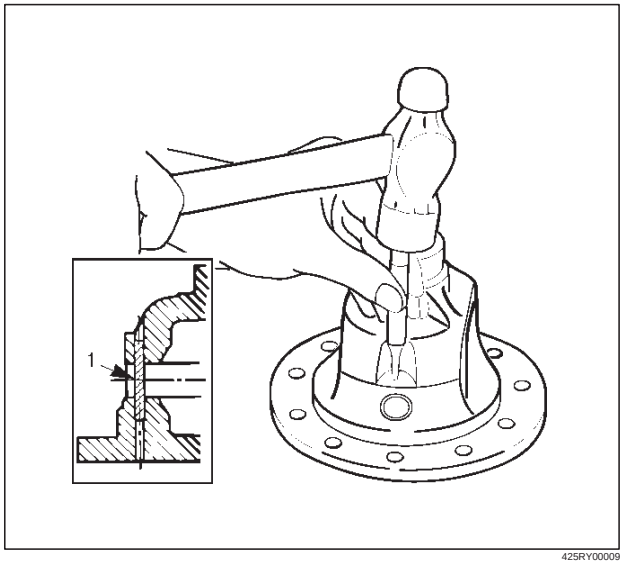

425RY00009

5. Install exciter ring (If equipped with rear wheel antilock).
   - Press the exciter ring on the differential cage using the ring gear as a pilot.

NOTE: Discard used exciter ring and install new one.

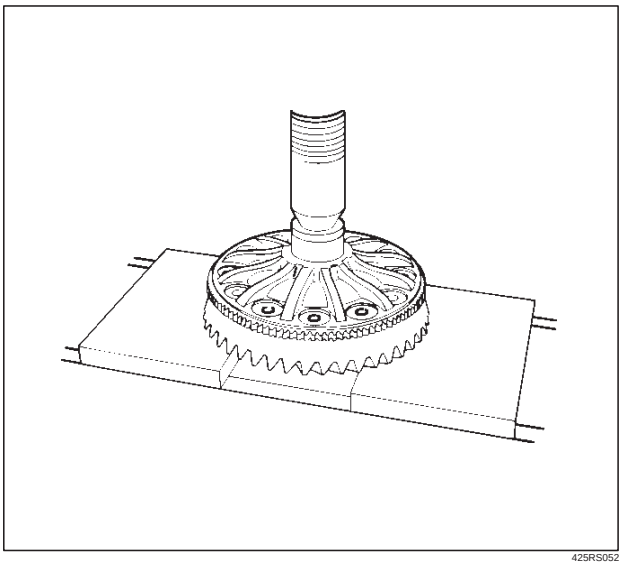

425RS052

6. Tighten the bolts in diagonal sequence as illustrated.

Torque: 127N·m (94 lb ft)

NOTE: Discard used bolts and install new ones.

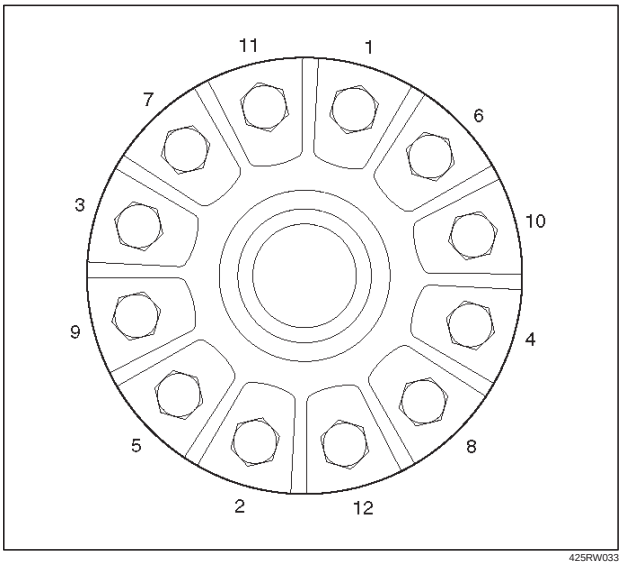

425RW033

Downloaded from www.Manualslib.com manuals search engine

Limited Slip Differential

Disassembled View

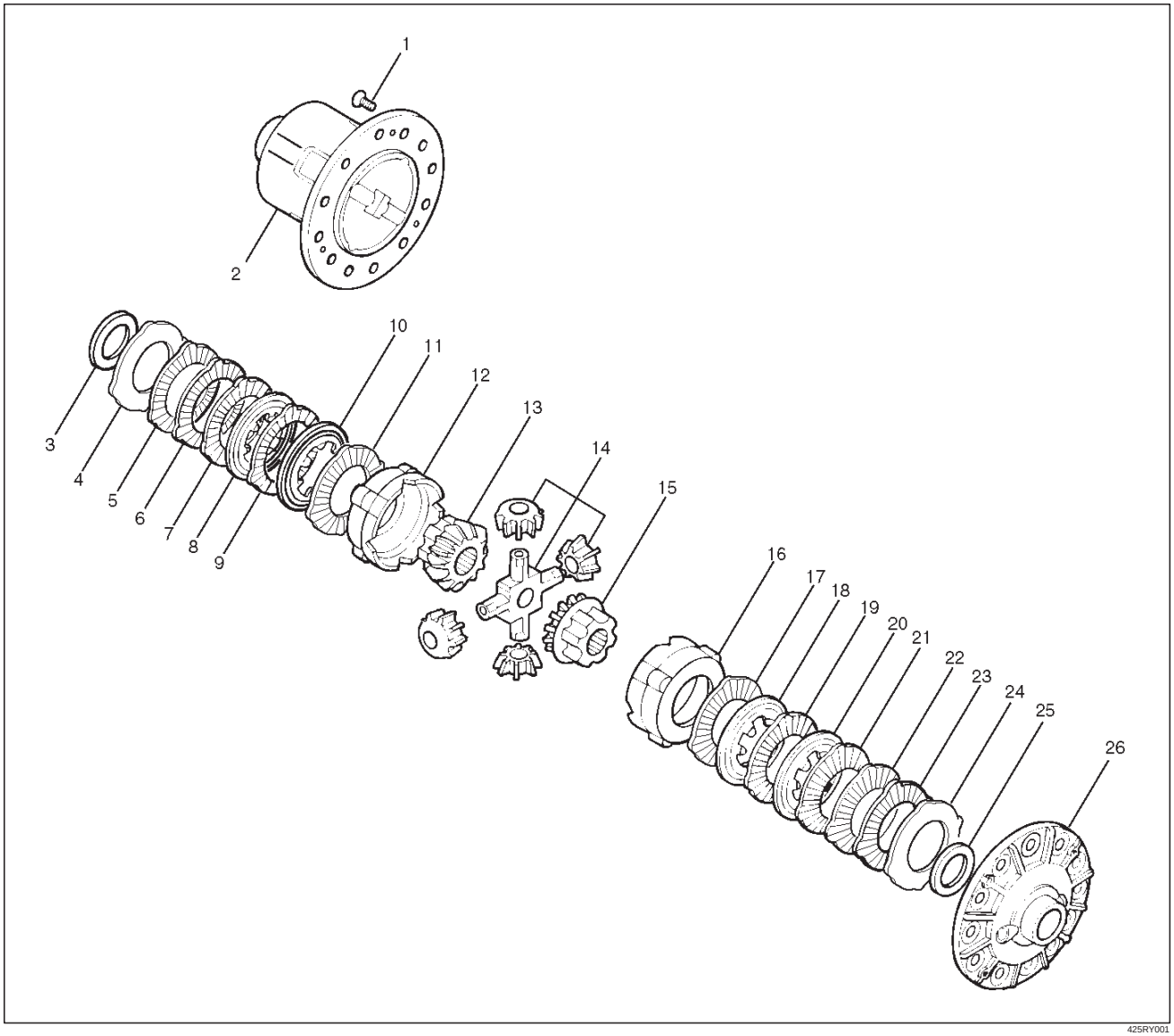

Legend

(1) Screw
(2) Differential cage A
(3) Thrust washer
(4) Spring disc
(5) Friction Plate
(6) Friction plate
(7) Friction Plate
(8) Friction disc
(9) Friction Plate
(10) Friction disc
(11) Friction Plate
(12) Pressure ring
(13) Side gear
(14) Pinion and Pinion shaft
(15) Side gear
(16) Pressure ring
(17) Friction Plate
(18) Friction disc
(19) Friction Plate
(20) Friction disc
(21) Friction Plate
(22) Friction Plate
(23) Friction Plate
(24) Spring disc
(25) Thrust washer
(26) Differential cage B

Downloaded from www.Manualslib.com manuals search engine

Disassembly

Differential Cages A and B

1. To ensure installation of the parts in original position apply a setting mark before removing the differential cages A and B.
2. Using special tool, J–44450, grip it with a vice, and set the differential.

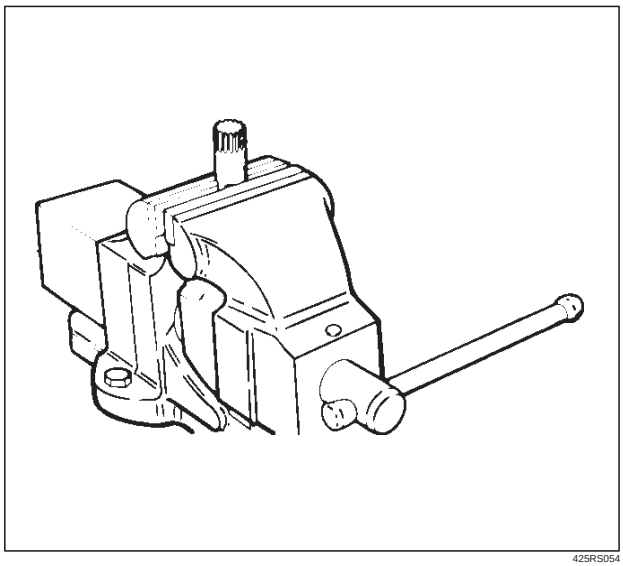

425RS054

3. Gradually and evenly loosen the 3 fixing screws of the differential cages A and B.

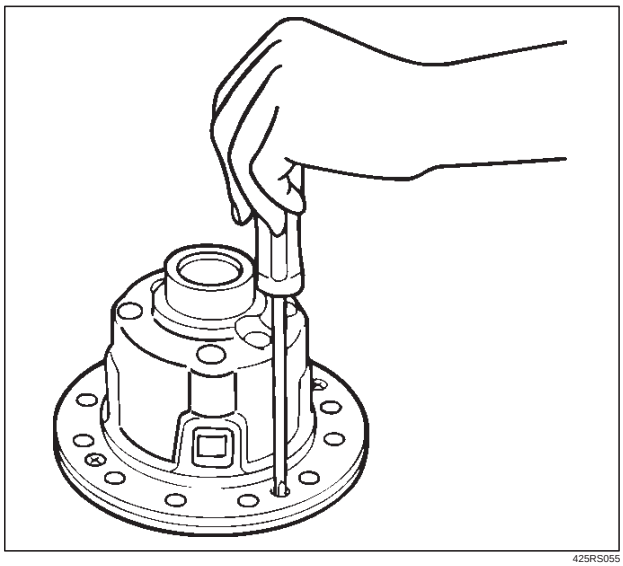

425RS055

4. Remove Differential cage A.
5. Remove Thrust washer.
6. Remove Spring disc.

NOTE: When removing the spring disc, friction disc, and friction plate, place them in order for clear distinction of left and right use.

7. Remove Spring disc.
8. Remove Friction plate.
9. Remove Friction plate.
10. Remove Friction disc.
11. Remove Friction plate.
12. Remove Friction disc.
13. Remove Friction plate.
14. Remove Pressure ring.
15. Remove Side gear.
16. Remove Pinion and pinion shaft.
17. Remove Side gear.
18. Remove Pressure ring.
19. Remove Friction plate.
20. Remove Friction disc.
21. Remove Friction plate.
22. Remove Friction disc.
23. Remove Friction plate.
24. Remove Friction plate.
25. Remove Friction plate.
26. Remove Friction disc.
27. Remove Thrust washer.
28. Remove Differential cage B.

Inspection and Repair

Make necessary correction or parts replacement if wear, damage, corrosion or any other abnormal condition is found through inspection.

Visual check

Check the following parts for wear, damage, noise or any other abnormal conditions.

- **Friction disc, friction plate and spring disc**

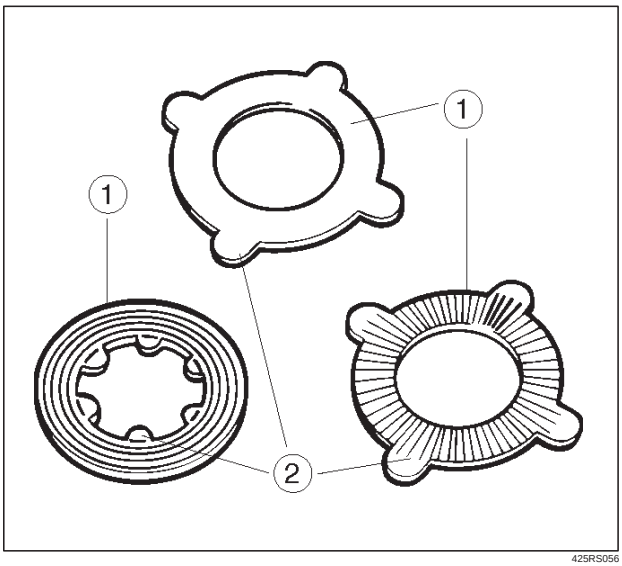

425RS056

Legend

(1) Sliding surfaces
(2) Projections

Downloaded from www.Manualslib.com manuals search engine

- **Pressure ring**

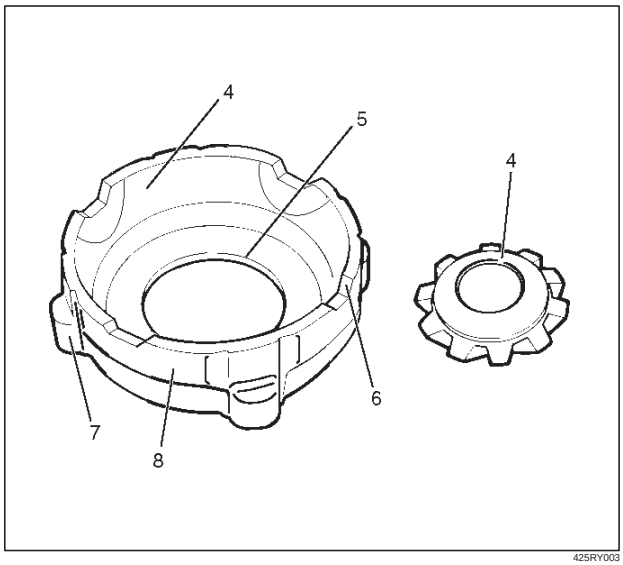

425RY003

Legend

(3) Sliding surface with the friction disc. When nicks or scratches are found, polish with an oil stone and repair on a level block using a compound.
(4) Sliding spherical surface with the pinion gear.
(5) Sliding surface with the side gear.
(6) V–shaped groove of the pressure ring and V –shaped section of the pinion shaft.
(7) Fitting section with the case.
(8) Face contacting the inner surface of the differential case. Repair burrs and nicks using an oil stone.

- **Thrust washer**

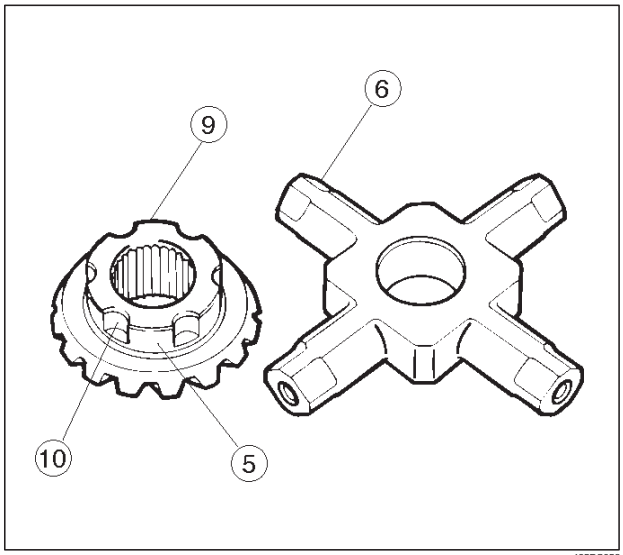

425RS058

Legend

(9) Sliding surface with the side gear or case.
(10) Peripheral groove of the side gear.
Repair light nicks and burrs using an oil stone.

- **Case**

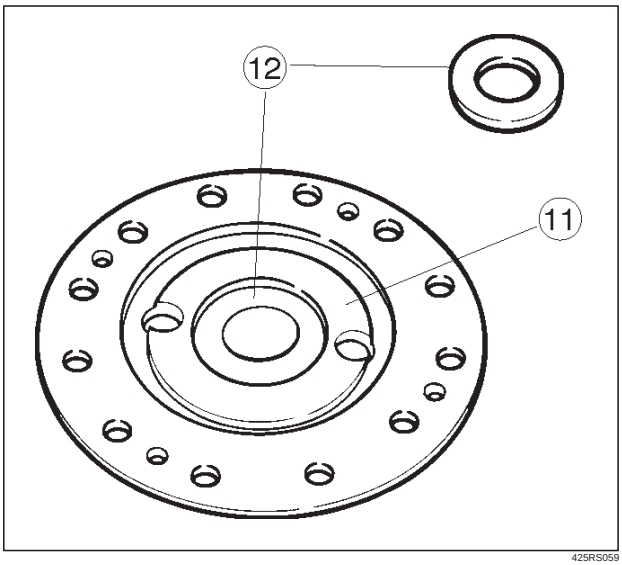

425RS059

Legend

(11) Contact surface with the spring disc.
(12) Inner groove of the differential cage B.
Repair light nicks and burrs using an oil stone.

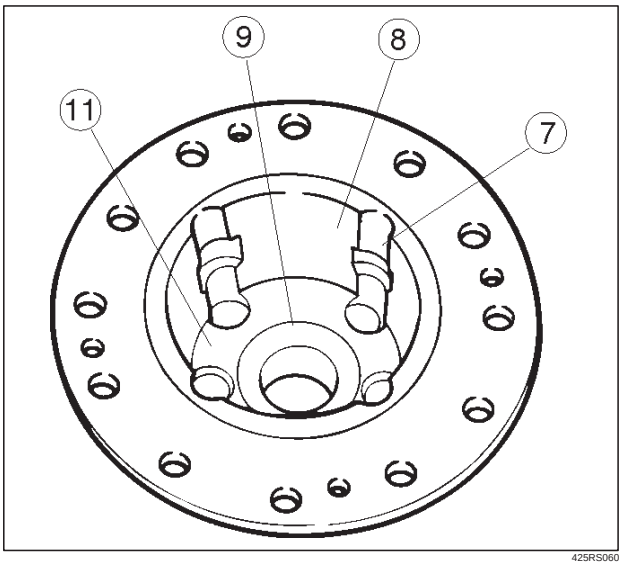

425RS060

Legend

(7) Fitting section with the case.
(8) Face contacting the inner surface of the differential case.
Repair burrs and nicks using an oil stone.
(9) Sliding surface with the side gear or case.
(11) Contact surface with spring disc.

Downloaded from www.Manualslib.com manuals search engine

Measure the Deformation of the friction disc & plate.

Limit: 0.1 mm (0.004 in)

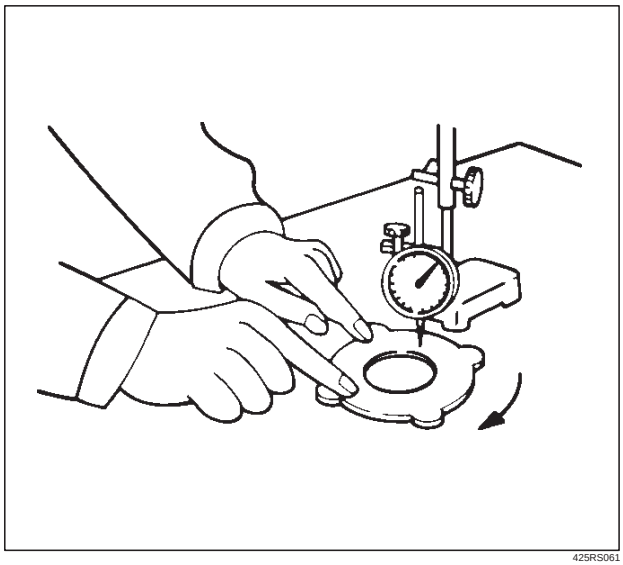

425RS061

Measure the wear of the friction plate & disc

Limit(A–B): 0.1 mm (0.004 in)

Remarks:

A=Inner or outer projections

B=Sliding surface subjected to abrasion

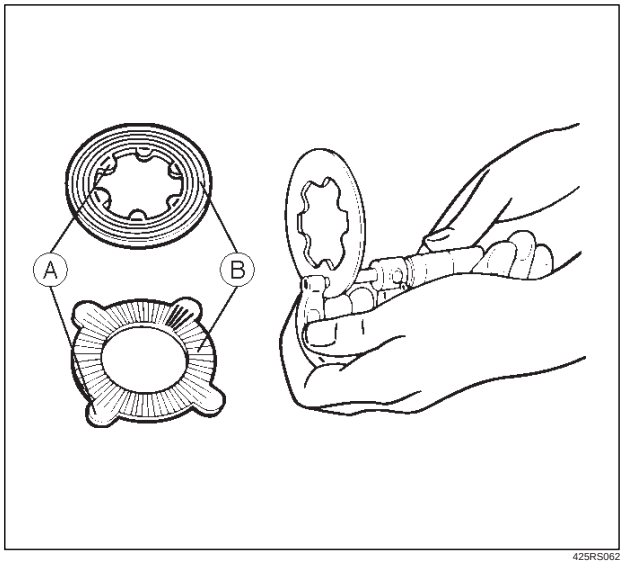

425RS062

Measure the wear of the thrust washer

Limit: 1.3 mm (0.05 in)

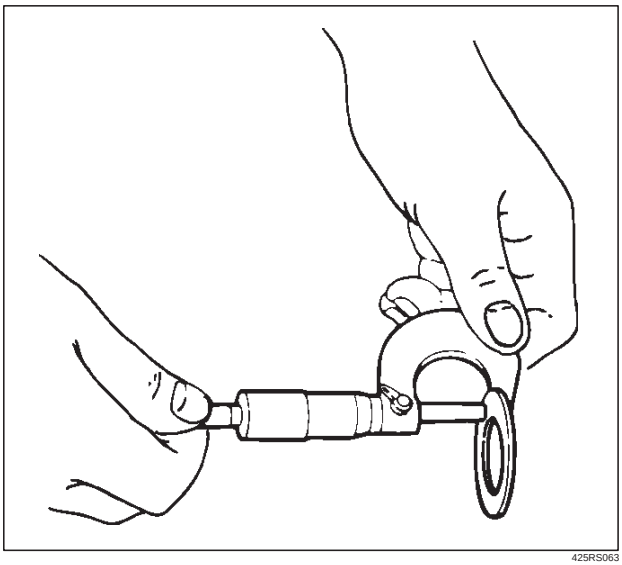

425RS063

Reassembly

Adjust the clearance between the friction disc and plate.

1. Measuring the depth of the differential cage.

Standard (A–B): 89.13 mm (3.51 in)

(C): 9.13 mm (0.36 in)

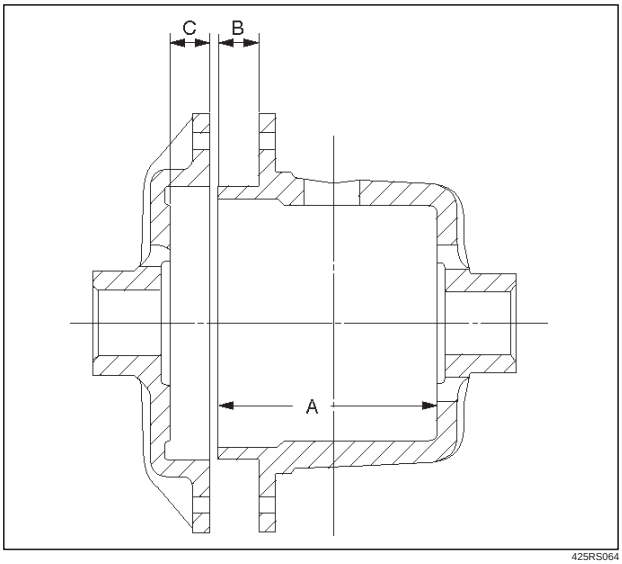

425RS064

Downloaded from www.Manualslib.com manuals search engine

2. Measuring the overall length of the pressurering, friction disc and friction plate.
   - Mount the pinion shaft in the pressurering and then install the friction disc & plate.
   - Measure the length between the plates over the V–groove. (D)

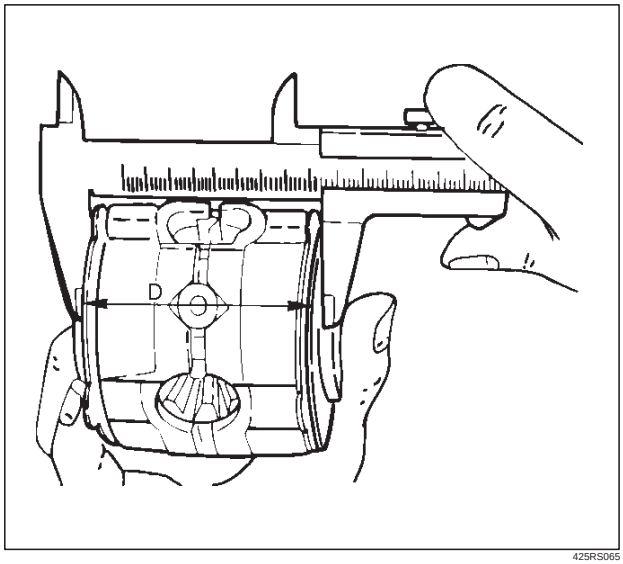

425RS065

3. After measuring dimensions A,B,C and D, make adjustment in the following manner:
   - Measure the thickness (E) of the spring disc.
     1.75mm (0.069in) ×2 discs
4. Select the friction disc & plate so as to satisfy the following equation:
   {(A-B)+C}-(D+E)=0.06-0.20mm (0.002-0.008in)
   Also, the total size difference of the friction disc & plate and spring disc should be 0.05mm (0.02in) or less.

Thickness
:1.65–1.75–1.85mm(0.065–0.069–0.073 in)

Backlash adjustment of the side gear in the direction of the shaft

1. Measuring the depth of the differential cage.

(F–B): 95.63 mm (3.76 in)

(G): 15.63 mm (0.62 in)

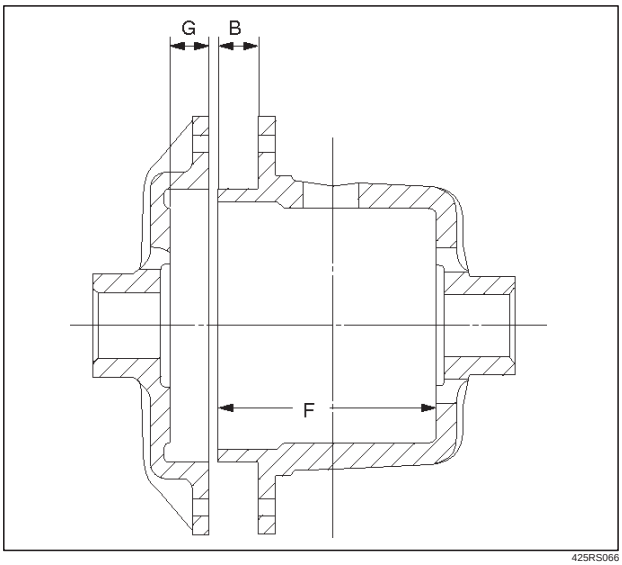

425RS066

2. Measuring the dimension between the thrust washers at both ends.
   - Assemble the side gear, pinion, pinion shaft, pressure ring and thrust washer, and pressing the pressure ring to–the pinion shaft in the direction of the shaft to make the clearance 0.
   - Have the side gear contact to the pinion to make the backlash 0.
   - Measure the dimension (H) between thrust washers at both ends.

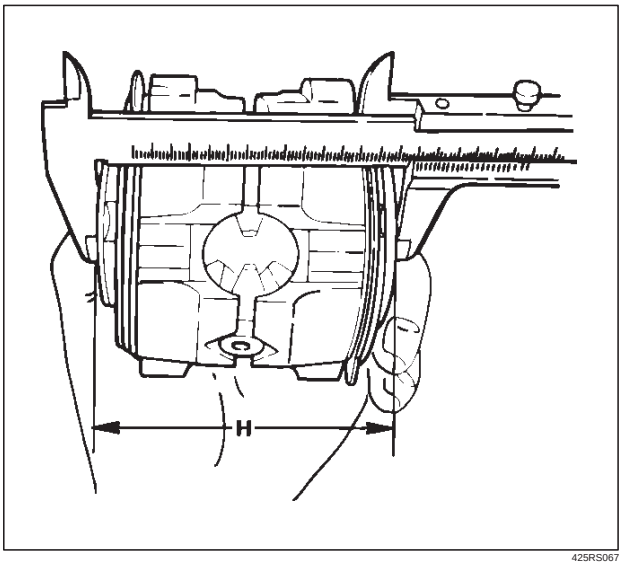

425RS067

Downloaded from www.Manualslib.com manuals search engine

3. After measuring dimensions of each of the above sections, proceed with the adjustment in the following manner:
   Adjust the clearance to satisfy the equation below.
   {(F – B) + G – H}=0.05 – 0.20 mm
   Also, select the thrust washers so that the dimensional difference between the back surfaces of the left and right pressure rings to the thrust washers is 0.05mm or less.

Thickness : 1.5mm (0.059 in)
1.6 mm(0.063 in)
1.7 mm(0.067 in)

NOTE: When assembling the parts, apply recommended gear oil sufficiently to each of the parts, especially, to the contact surfaces and sliding surfaces.

1. Install Differential cage B.
2. Install Thrust washer.
3. Install Spring disc.
   - When assembling the spring disc, make sure the mounting direction is correct as shown in figure.

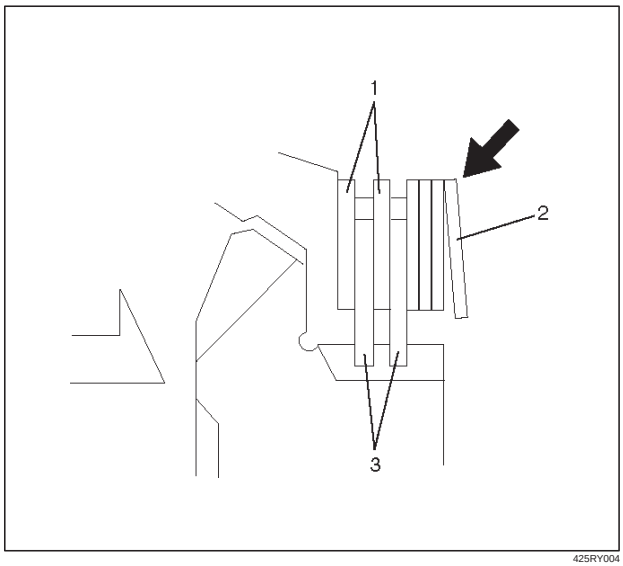

425RY004

Legend
(1) Friction Plate
(2) Spring Disc
(3) Friction Disc

4. Install Friction disc.
5. Install Friction plate.
6. Install Friction plate.
7. Install Friction disc.
8. Install Friction plate.
9. Install Friction disc.
10. Install Friction plate.
11. Install Pressure ring.
12. Install Side gear.
13. Install Pinion and pinion shaft.
14. Install Side gear.
15. Install Pressure ring.
16. Install Friction plate.
17. Install Friction disc.
18. Install Friction plate.
19. Install Friction disc.
20. Install Friction plate.
21. Install Friction plate.
22. Install Friction plate.
23. Install Spring disc.
    - When assembling the spring disc, make sure the mounting direction is correct.
24. Install Spring disc.
25. Install Thrust washer.
26. Install Differential cage A.
27. Install Screw.
    - Matching the guide marks of the differential cages A and B, tighten the screws evenly in the diagonal order.

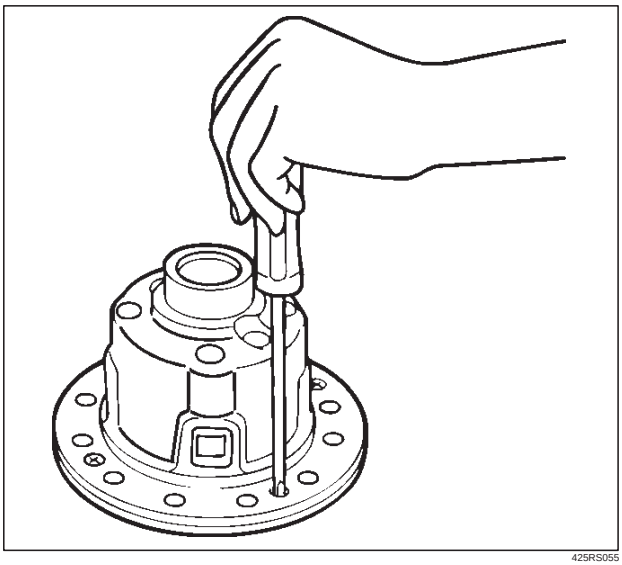
425RS055

Downloaded from www.Manualslib.com manuals search engine

28. Check the operation.
   - Measure the starting torque using the side gear holder.

   Starting torque:

   29 – 45 N·m (3.0 – 4.6 kg·m/ 22 – 33lb ft)

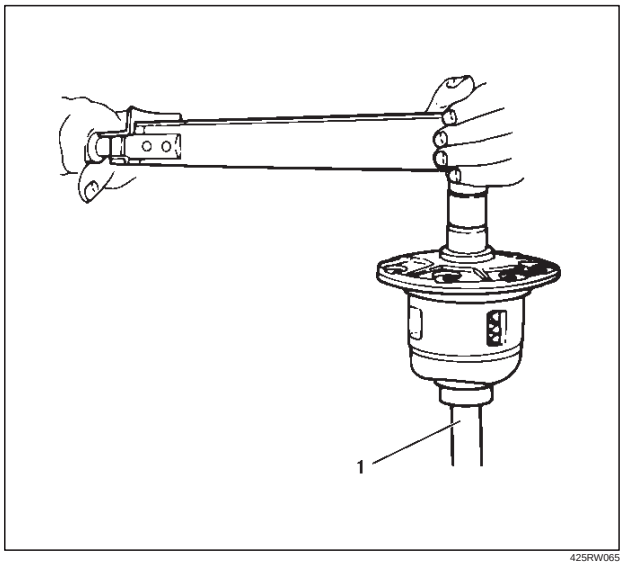

425RW065

Legend

(1) Side Gear Holder : J–44450

Downloaded from www.Manualslib.com manuals search engine

Main Data and Specifications

General Specifications

Rear axle	
Type	Banjo, Semi–floating
Rear axle Size	244 mm (9.61 in)
Gear type	Hypoid
Gear ratio (to 1)	4.300
Differential type	Two pinion
Lubricant Grade	GL–5: (Standard differential)
	GL–5, LSD: (Limited slip differential)
Locking Differential Lubricant	80W90 GL–5 (USE Limited Slip Differential Gear Lubricant or Friction Modifier Organic Additive)
Capacity	3.0 liter (3.2 US qt)

Torque Specifications

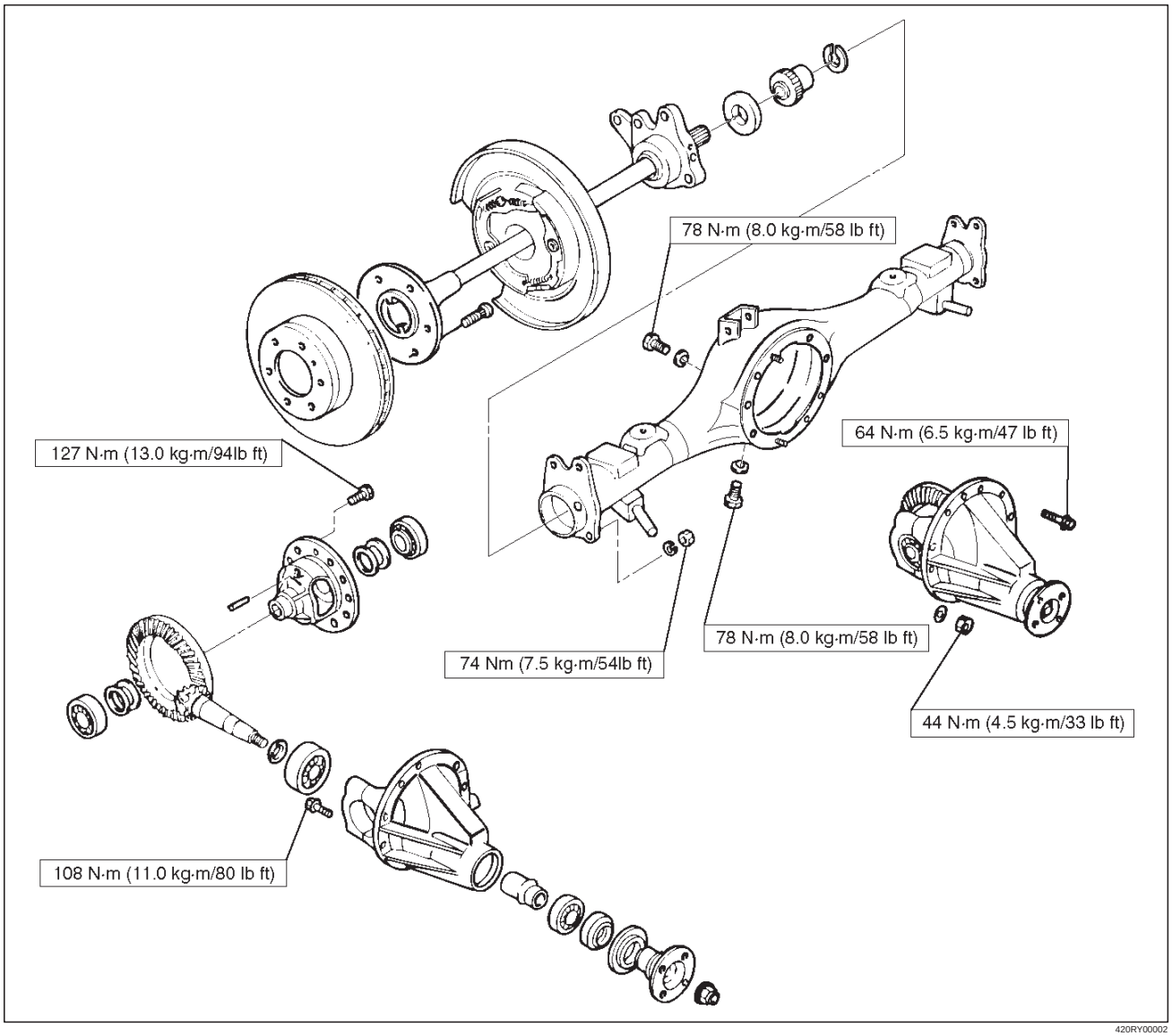

420RY00002

Downloaded from www.Manualslib.com manuals search engine

Special Tools

ILLUSTRATION	TOOL NO. TOOL NAME
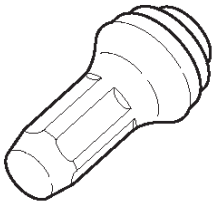 901RS205	**J–39210** Installer; Axle shaft inner seal
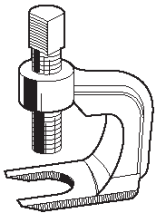 901RS206	**J–6627–A** Wheel pin remover
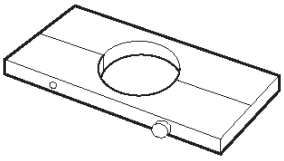 901RS207	**J–39211** Remover; Axle shaft bearing
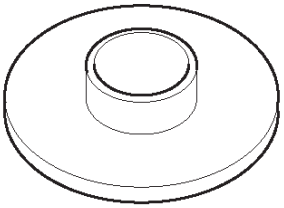 901RS208	**J–39212** Installer; Axle shaft bearing
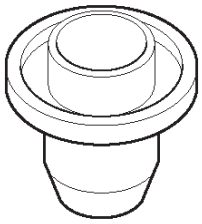 901RS209	**J–39379** Installer; Outer axle seal
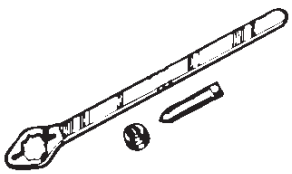 901RW037	**J–8614–01** Pinion flange holder

ILLUSTRATION	TOOL NO. TOOL NAME
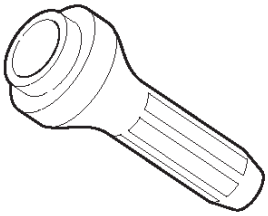 901RS211	**J–37263** Installer; Pinion oil seal
901RW038	**J–42832** Holding fixture
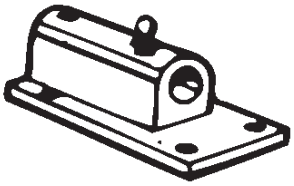 901RS212	**J–3289–20** Holding fixture base
901RW039	**J–42379** Remover; Bearing
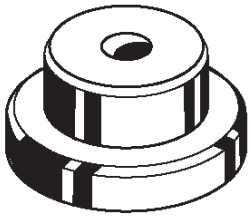 901RS215	**J–8107–3** Adapter; Side bearing plug
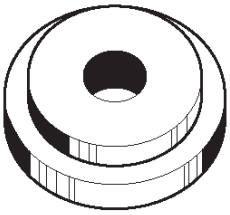 901RS217	**J–44461** Installer; Outer bearing outer race

Downloaded from www.Manualslib.com manuals search engine

ILLUSTRATION	**TOOL NO.** TOOL NAME
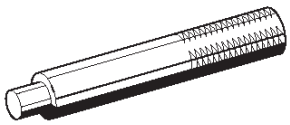 901RS218	**J–8092** Grip
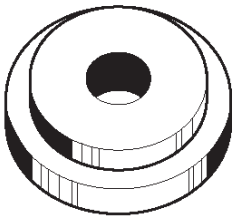 901RS219	**J–44462** Installer; Inner bearing outer race
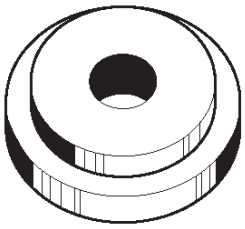 901RS220	**J–42824** Pilot;Outer
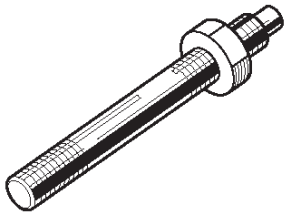 901RS221	**J–21777–43** Nut & Stud
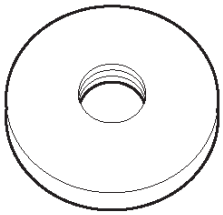 901RS222	**J–44453** Pilot;Inner
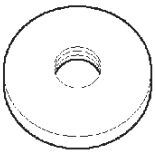	**J–44449** Pilot;Outer bearing

ILLUSTRATION	**TOOL NO.** TOOL NAME
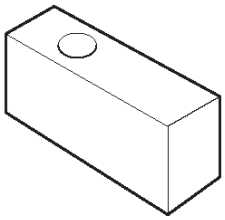 901RS223	**J–44451** Gage plate
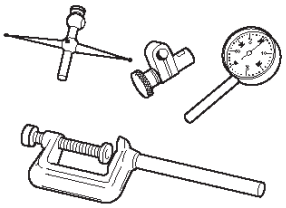 901RS224	**J–8001** Dial indicator
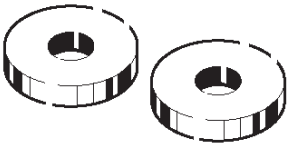 901RS225	**J–44452** Disc (2 required)
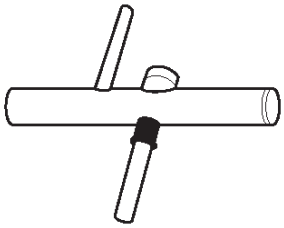 901RS226	**J–23597–1** Arbor
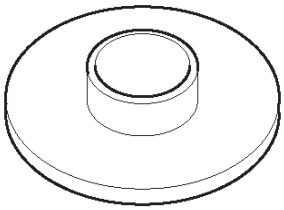 901RS208	**J–42828** Installer; Pinion bearing
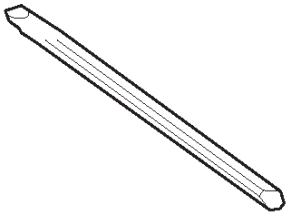 901RS228	**J–39209** Punch; End nut lock

Downloaded from www.Manualslib.com manuals search engine

ILLUSTRATION	**TOOL NO.** TOOL NAME
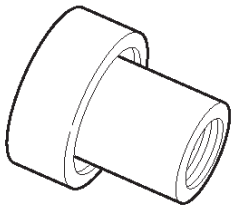	**J–42829** Installer; Side bearing
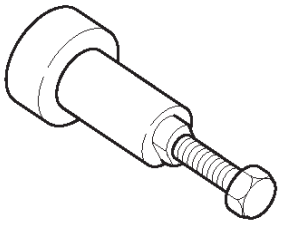	**J–39602** Remover; Outer bearing
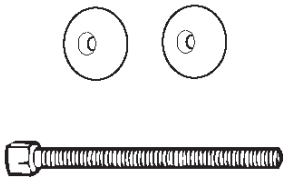	**J–39858** Clutch pack unloading tool kit Includes **J–34174–1/J–34174–2** Screw cap and Cap **J–22342–15** Forcing screw
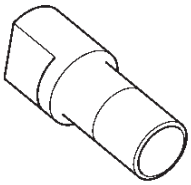	**J–44450** Side gear holder

Downloaded from www.Manualslib.com manuals search engine

TROOPER

DRIVELINE/AXLE

DRIVELINE CONTROL SYSTEM (SHIFT ON THE FLY)

CONTENTS

Service Precaution 4B1–1
Shift On The Fly System 4B1–2
Outline of Shift on The Fly System 4B1–2
Functions of Indicator Lamp 4B1–6
Diagnosis 4B1–7
Front Axle Diagnosis 4B1–17
Shift On The Fly Vacuum Piping And Electric Equipment 4B1–19
Vacuum piping diagram 4B1–19
Inspection And Repair 4B1–20
4WD Control Unit 4B1–23
4WD Control Unit Associated Parts 4B1–23
Removal 4B1–24
Installation 4B1–24

Service Precaution

WARNING: THIS VEHICLE HAS A SUPPLEMENTAL RESTRAINT SYSTEM (SRS). REFER TO THE SRS COMPONENT AND WIRING LOCATION VIEW IN ORDER TO DETERMINE WHETHER YOU ARE PERFORMING SERVICE ON OR NEAR THE SRS COMPONENTS OR THE SRS WIRING. WHEN YOU ARE PERFORMING SERVICE ON OR NEAR THE SRS COMPONENTS OR THE SRS WIRING, REFER TO THE SRS SERVICE INFORMATION. FAILURE TO FOLLOW WARNINGS COULD RESULT IN POSSIBLE AIR BAG DEPLOYMENT, PERSONAL INJURY, OR OTHERWISE UNNEEDED SRS SYSTEM REPAIRS.

CAUTION: Always use the correct fastener in the proper location. When you replace a fastener, use ONLY the exact part number for that application. ISUZU will call out those fasteners that require a replacement after removal. ISUZU will also call out the fasteners that require thread lockers or thread sealant. UNLESS OTHERWISE SPECIFIED, do not use supplemental coatings (Paints, greases, or other corrosion inhibitors) on threaded fasteners or fastener joint interfaces. Generally, such coatings adversely affect the fastener torque and the joint clamping force, and may damage the fastener. When you install fasteners, use the correct tightening sequence and specifications. Following these instructions can help you avoid damage to parts and systems.

Downloaded from www.Manualslib.com manuals search engine

Shift On The Fly System

Outline of Shift on The Fly System

The shift on the fly system switches between 2 wheel drive (2WD) and 4 wheel drive (4WD) electrically by driver's pressing the 4WD switch (push button type) on instrument panel.
This system controls below operations. (Shifting between "4H" and "4L" must be performed by transfer control lever on the floor.)

1. Shifting the transfer front output gear (Connecting to, and disconnecting from, front propeller shaft by motor actuator).
2. Retrial of shifting the transfer front output gear.
3. Connecting front wheels to, and disconnecting them from, the front axles by vacuum actuator.
4. Indicator on instrument panel.
5. 4WD out signal to other Electronic Hydraulic Control Unit.

System Diagrams

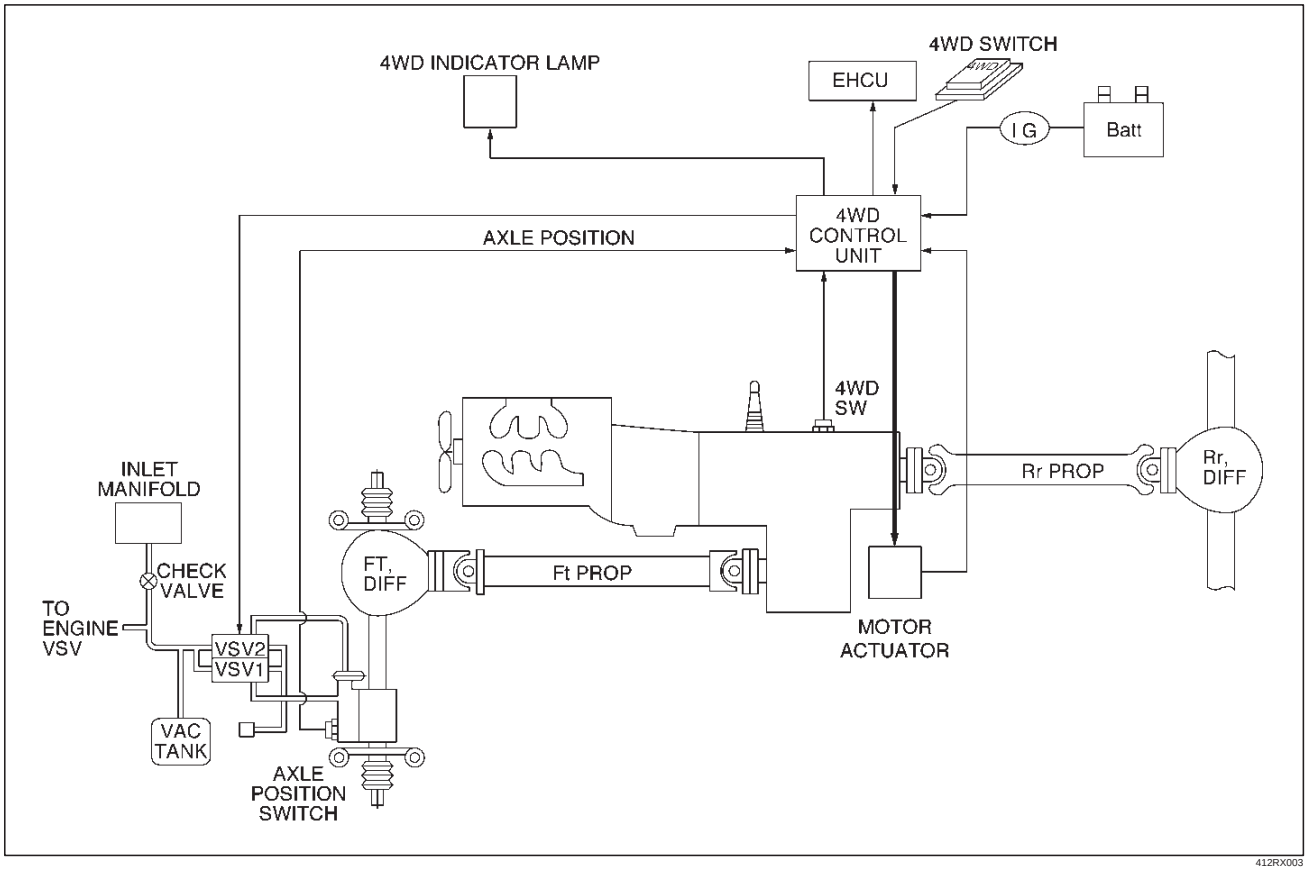

412RX003

Downloaded from www.Manualslib.com manuals search engine

Normal Operation

The motor actuator mounted on transfer rear case is driven by signal from 4WD switch on instrument panel. After complete the connecting transfer front output gear to, or disconnecting it from, front propeller shaft, condition of the transfer position switch changes. The vacuum solenoid valve (VSV) is driven by the signal from transfer position switch and the vacuum actuator connects front wheels to, or disconnect them from, front axles.

Time Chart of Shifting Under Normal Condition

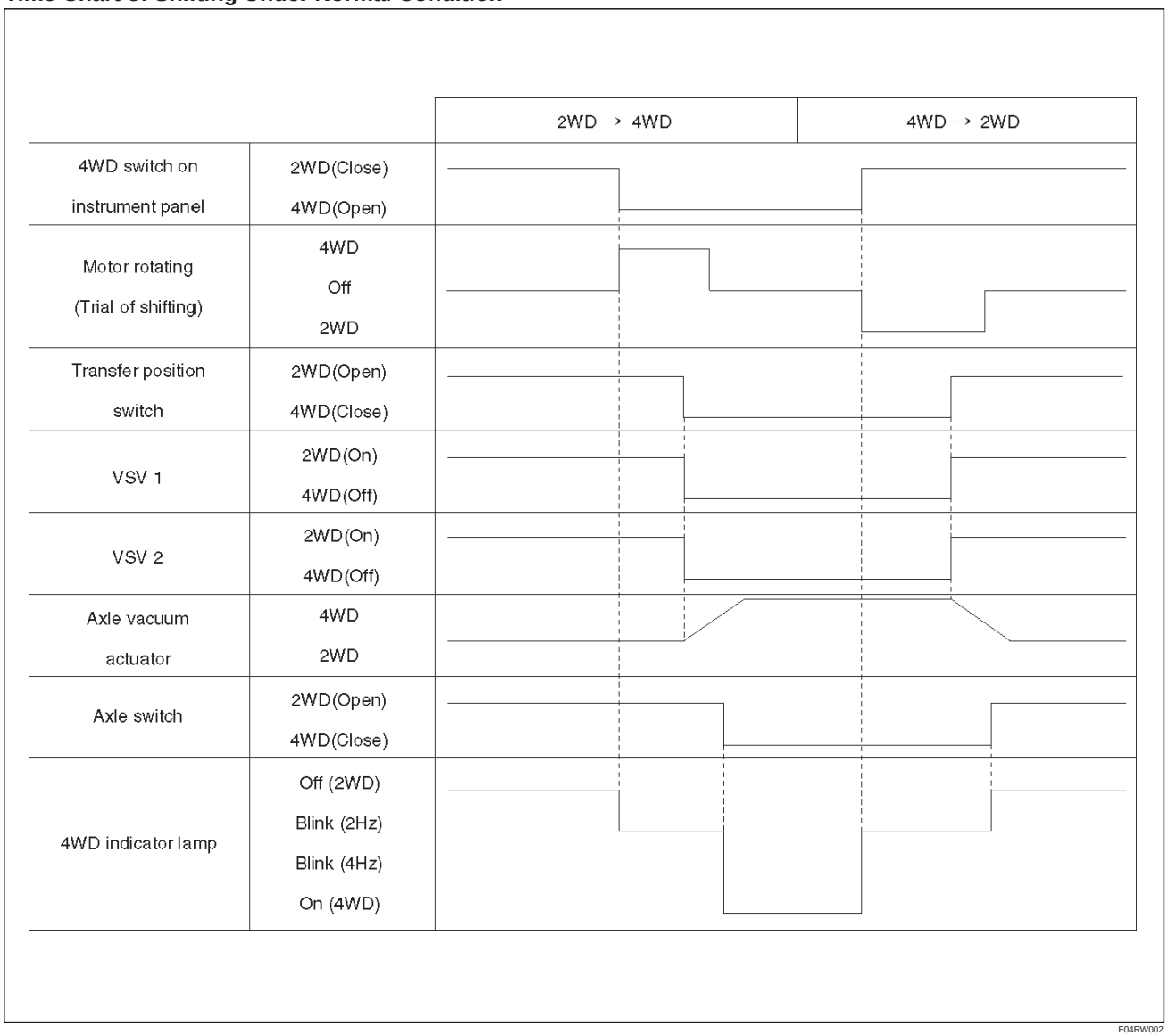

F04RW002

Downloaded from www.Manualslib.com manuals search engine

Retrial

The motor actuator starts transfer gear shifting after signal from 4WD switch on instrument panel has been received. But the shifting may be impossible in cold weather or under high speed condition. When 2 seconds have passed since transfer gear shifting started and the transfer position switch dose not turn on (the gear engagement is not completed), the motor reverses its rotation for 1.2 seconds and tries again to shift transfer gear. This procedure is repeated 3 times in maximum. While this procedure, 4WD indicator lamp blinks by 2 Hz. If the transfer position switch does not turn on after aforementioned procedure has been repeated 3 times, the gear shifting is stopped and 4WD indicator lamp's blinking changes from 2Hz to 4Hz to notify driver that the gear shifting is stopped. This blinking of indicator lamp continues until 4WD switch is returned from 4WD to 2WD.

Time Chart of Shifting Under Severe Condition (retrial)

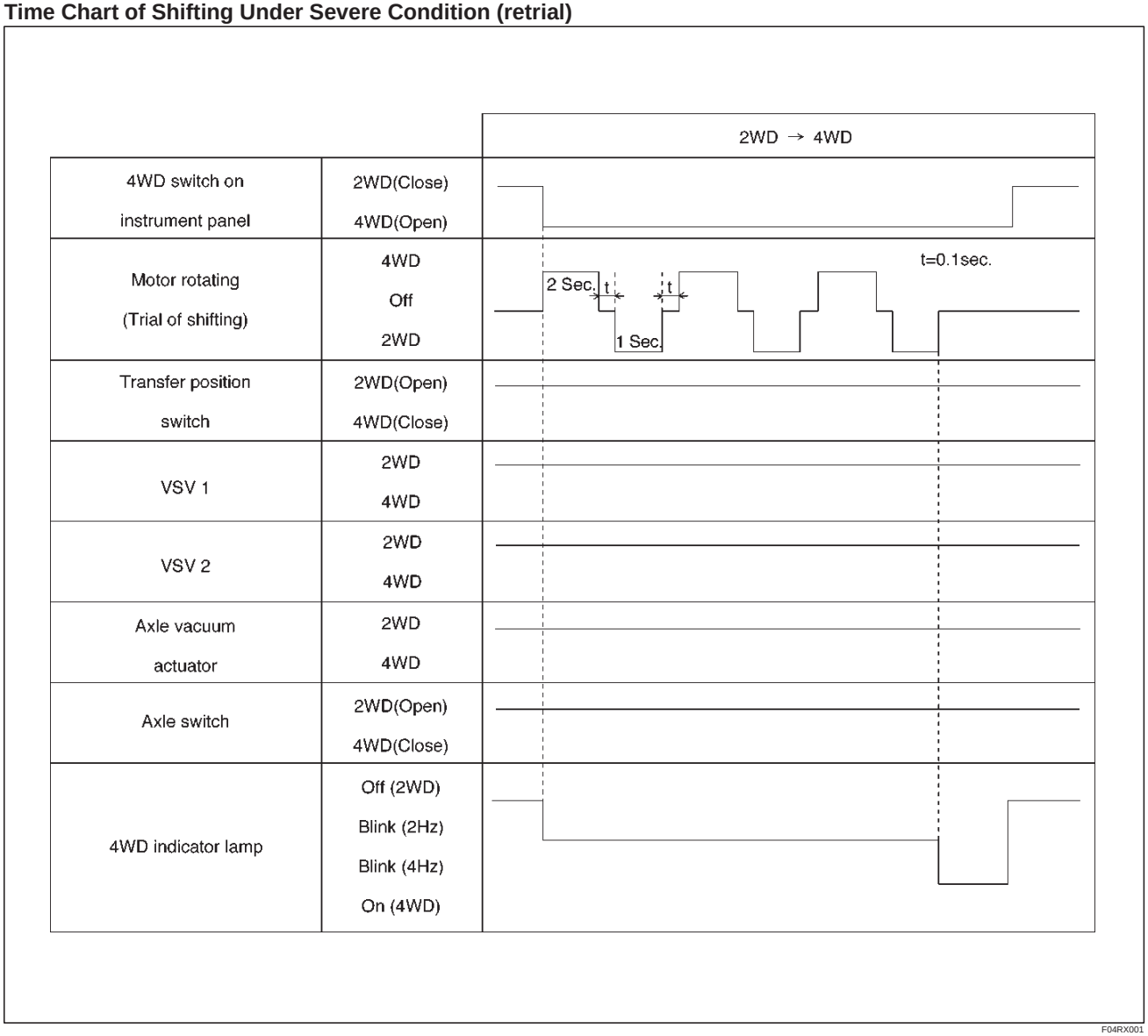

F04RX001

Downloaded from www.Manualslib.com manuals search engine

Warning at "4L" position : In view of the shifting mechanism of transfer, the gear shifting from 4WD to 2WD at "4L" condition is impossible. Therefore, the transfer position switch can not be turned off by 4WD switch when vehicle is in "4L" condition. In the case this condition continues for 2 seconds, the shifting to 2WD is stopped and the indicator lamp's blinking changes from 2Hz to 4Hz to notify driver of wrong operation.

Time Chart of Shifting from 4WD to 2WD at "4L" Condition

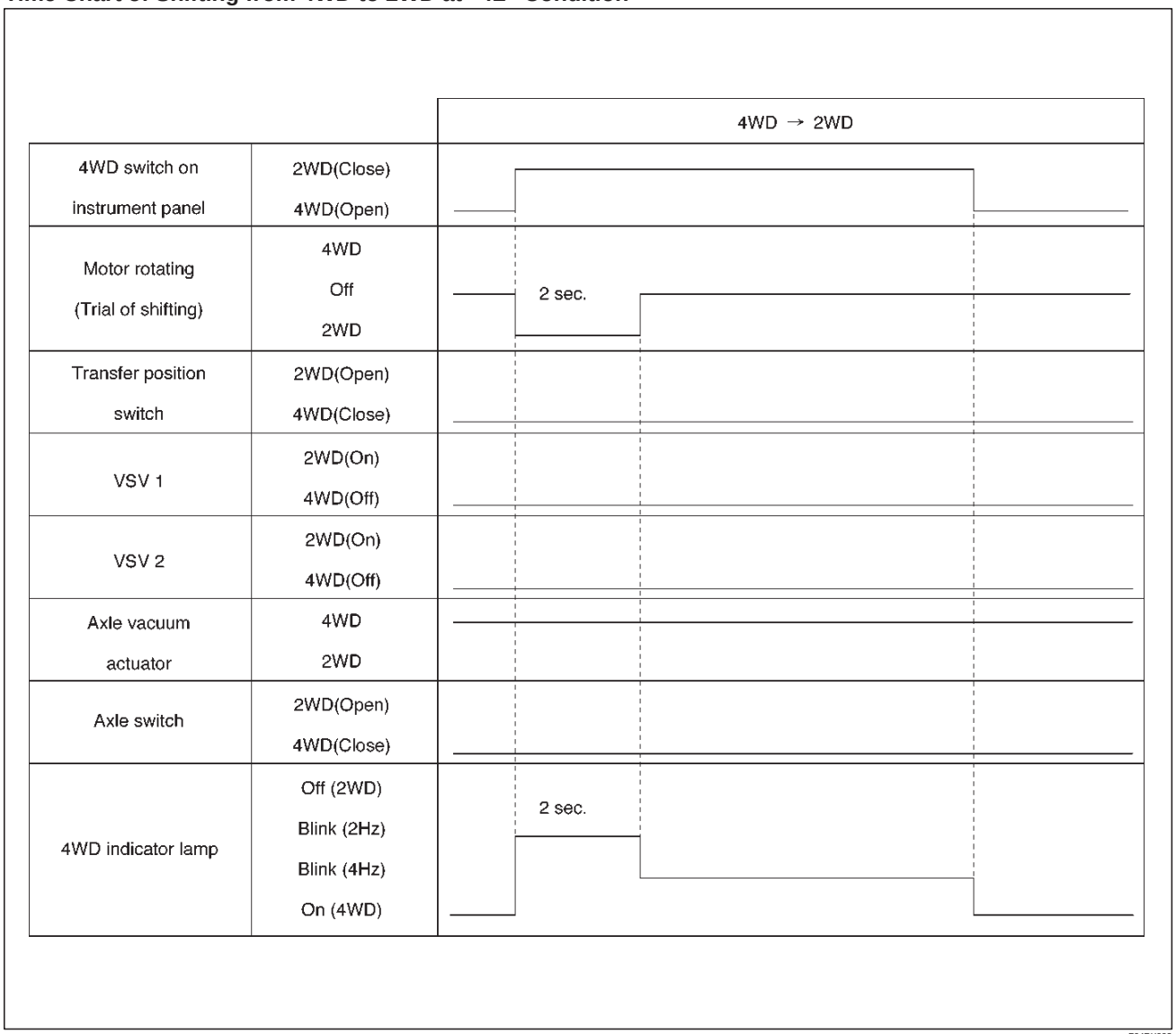

F04RX002

4WD out signal to other Electronic Hydraulic Control Unit : 4WDcontrol unit sends 4WD out signal to other Electronic Hydraulic Control Unit as below.

4WD out signal (Period)	Vehicle Condition	Transfer position switch	Front axle switch
120 ms	2WD	2WD (Open)	2WD (Open)
240 ms	4WD	4WD (Close)	4WD (Close)

Downloaded from www.Manualslib.com manuals search engine

Functions of Indicator Lamp

Indication of vehicle condition : Indicator lamp is controlled by 4WD control unit and shows vehicle conditions as below.

Indicator	Vehicle condition	4WD switch	Transfer position switch	Front axle switch
Off	2WD	Off (Close)	2WD (Open)	2WD (Open)
On	4WD	On (Open)	4WD (Close)	4WD (Close)
Blink (2Hz)	Operating	On (Open)	4WD (Close)	2WD (Open)
		Off (Close)	2WD (Open)	4WD (Close)
Blink (4Hz)	Stop operating	On (Open)	2WD (Open)	2WD (Open)
		Off (Close)	4WD (Close)	4WD (Close)

Bulb check :

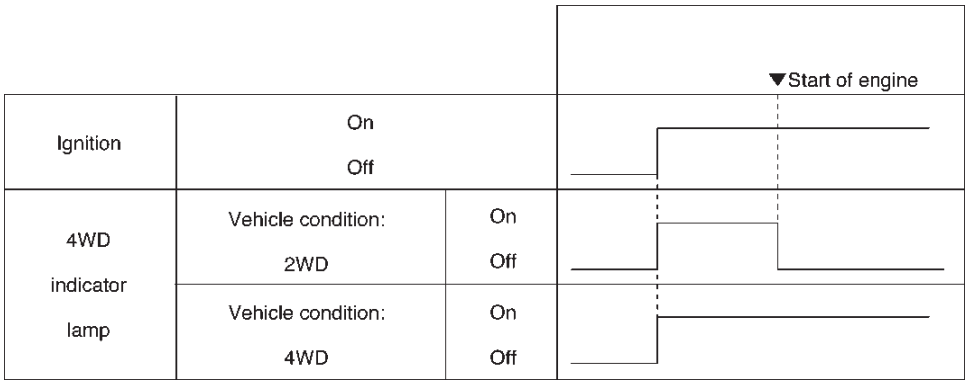

F04RX003

Retrials from 2WD to 4WD : In cold weather or under high speed condition, the gear shifting (engagement) sometimes does not complete by 3 trials. In such case, the indicator lamp inform driver of this incident as aforementioned chart (shown at Retrial in Outline of shift on the fly system).

Downloaded from www.Manualslib.com manuals search engine

Diagnosis

Before Judging That Troubles Occur (Unfaulty mode)

When Switching from 2WD to 4WD

1. **In case that blinking frequency of the 4WD indicator changes from 2Hz to 4Hz.**

   When heavy synchronization load is needed, the motor actuator tries the shifting transfer gear three times including the activation shifting. While the motor actuator tries shifting, the indicator blinks by 2Hz. If the third shifting fails, the indicator's blinking changes from 2Hz to 4Hz at the same time that the motor actuator shifted back to 2WD.

   Heavy synchronization load occurs by:

   - extremely lower temperature.
   - higher speed, rotation difference of wheels during cornering.

   Solution 1: Operate again after stop the vehicle or slow down.

2. **In case that the 4WD indicator continues blinking by 2Hz for more than 11.5 seconds.**

   When there is rotation difference of wheels or there is phase difference between front wheels and axles, it is difficult to connect front wheels to front axles. The blinking by 2Hz shows that shifting the transfer gear or connecting the front wheels is in the middle of operating. In above case, the indicator's blinking by 2Hz shows that connecting the front wheels is not completed (because the indicator's blinking changes to 4Hz when the shifting transfer gear is impossible.). And removal of rotation or phase difference make connecting the front wheels possible.

   Solution 2: When vehicle is running, drive straight ahead while accelerating and decelerating. When vehicle is at a stop, move the vehicle forward and backward from 2 to 3 meters.

When switching from 4WD to 2WD

1. **In case that the 4WD indicator continues blinking by 2Hz .**

   The 4WD indicator continues blinking by 2Hz until both shifting the transfer gear and disconnecting the front wheels are completed when switching 4WD to 2WD. When driveline is loaded with torsional torque, the shifting transfer gear and disconnecting front wheels are impossible. In this case, removal of torsional torque on driveline make the shifting transfer gear and disconnecting front wheels possible.

   Solution 3: When vehicle is running, drive straight ahead while accelerating and decelerating. When vehicle is at a stop, move the vehicle forward and backward from 2 to 3 meters.

2. **In case that the 4WD indicator's blinking changes from 2Hz to 4Hz.**

   Check the position of transfer lever. Is it at "4L" position? In view of the shifting mechanism of transfer, the gear shifting from 4WD to 2WD at "4L" condition is impossible.

   Solution 4: Push the 4WD switch to 4WD, shift the transfer lever to "High" position and re–operate the 4WD switch to 2WD.

Downloaded from www.Manualslib.com manuals search engine

Parts Location

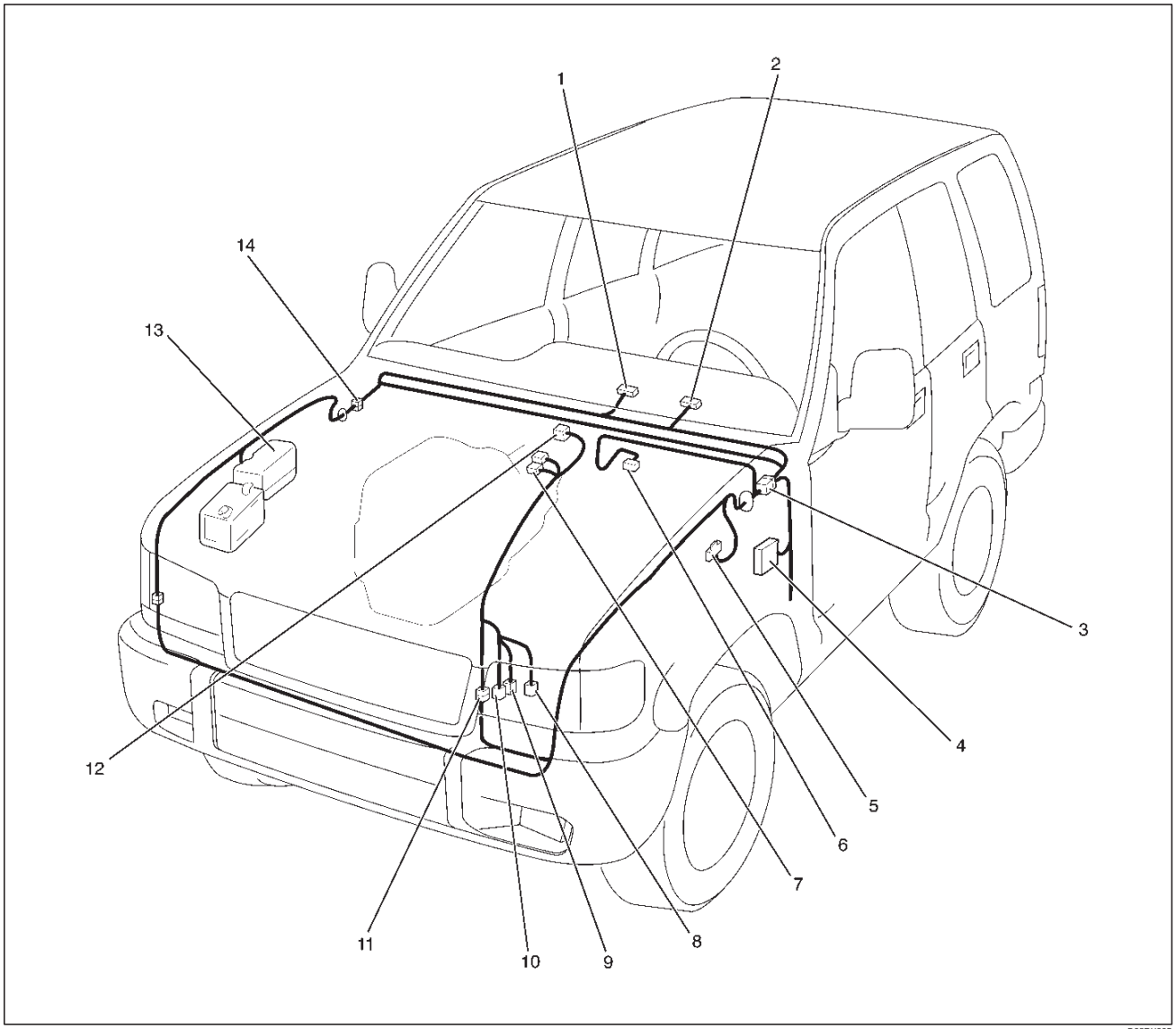

Legend

(1) I–12
(2) I–9
(3) H–7, H–24, H–25
(4) Fuse Box
(5) C–16
(6) C–94
(7) M–11, M–12
(8) M–22
(9) M–23
(10) M–24
(11) H–10
(12) M–26
(13) Relay & Fuse Box
(14) H–12, H–16

Downloaded from www.Manualslib.com manuals search engine

Wiring Diagram

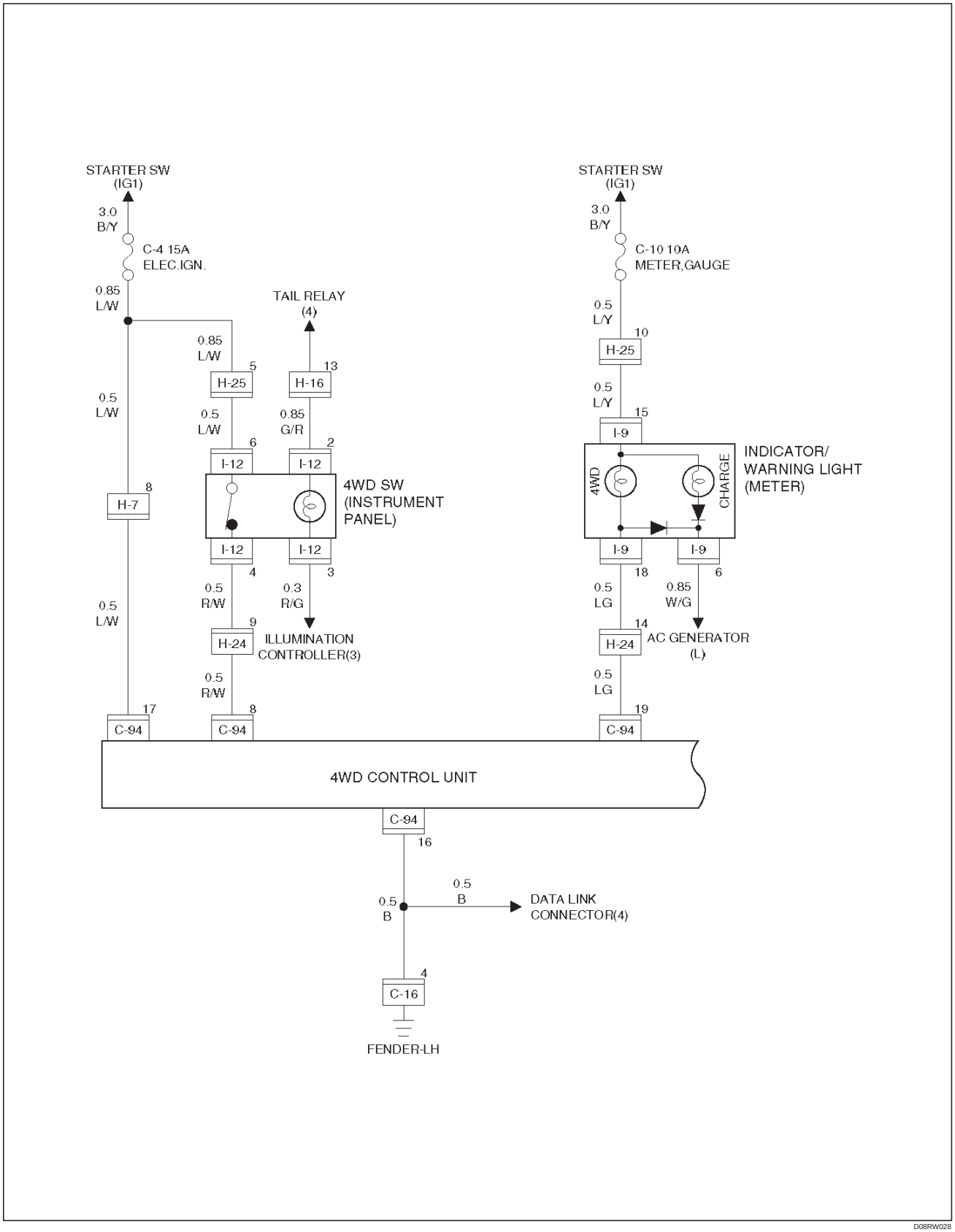

Downloaded from www.Manualslib.com manuals search engine

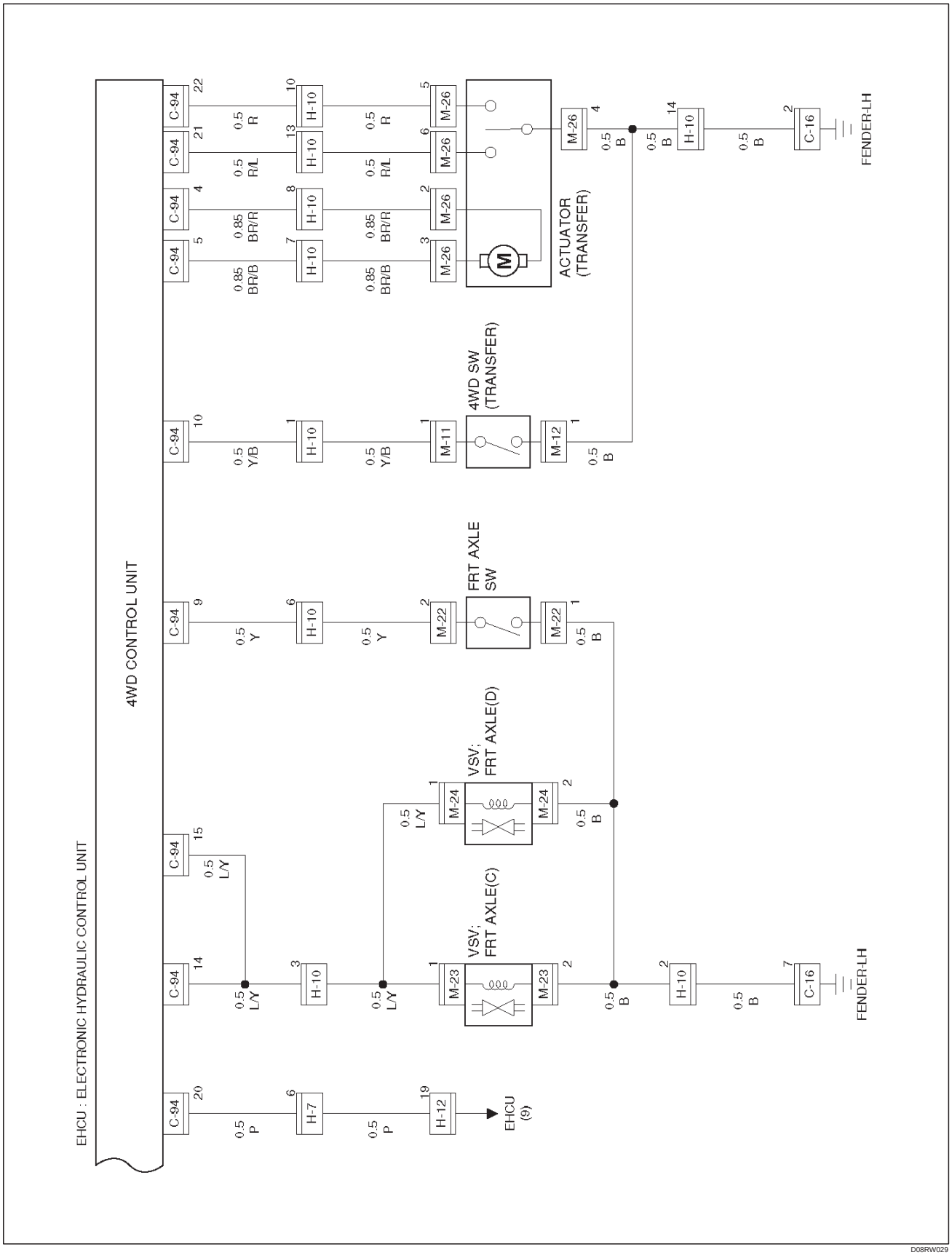

D08RW029

Downloaded from www.Manualslib.com manuals search engine

Connector List

No.	Connector face	No.	Connector face
C-16	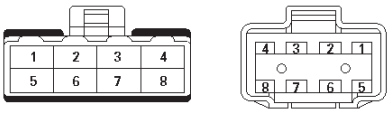	I-9	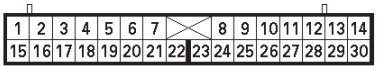
C-94	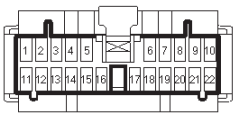	I-12	
H-7	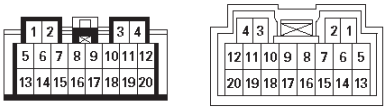	M-11	
H-10	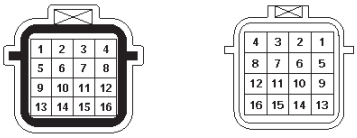	M-12	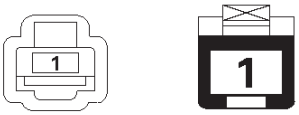
H-12	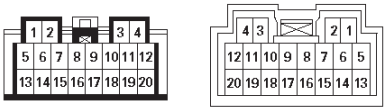	M-22	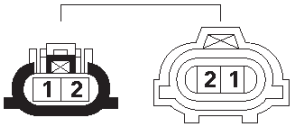
H-16	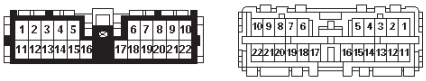	M-23	
H-24	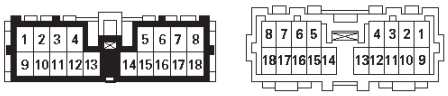	M-24	
H-25	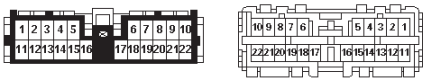	M-26	

D04RW030

Downloaded from www.Manualslib.com manuals search engine

Diagnosis of The Faults Based on the Status of 4WD Indicator Lamp, 4WD Switch and T/F Change Lever

Diagnosis charts are shown on below. If troubles can not be solved after every chart was traced, troubles may occur in the 4WD control unit. In this case, replace the 4WD control unit and trace every chart again.

Fault on switching from 2WD to 4WD

1. **In case that 4WD indicator's blinking changes from 2Hz to 4Hz after Solution 1 is carried out.**
   Faults occur in the motor actuator or the transfer case assembly. Remove the motor actuator and check function. If problem was found and it was repaired, try **Solution 1** again. After that, disassemble the transfer case assembly for check and repair or replace. If incident is not improved after above mentioned actions were taken, replace the 4WD control unit.
2. **In case that 4WD indicator does not blink nor light, when switching from 2WD to 4WD.**

Step	Action	Yes	No
1	Is ignition turned on?	Go to Step 2	Turn on the ignition and trace this chart from start.
2	Does the indicator light comes on when the engine is not started?	Go to Step 3	Burning out of indicator lamp or disconnection of harness wire. Trace this chart from the start after repair or replace.
3	Start the engine. Is the 4WD switch turned from 2WD to 4WD?	Short-circuit (body short) on harness of the 4WD switch. Fault of the 4WD switch (holding the closed condition). Trace this chart from the start after repair or replace.	Push the 4WD switch to 4WD.

Downloaded from www.Manualslib.com manuals search engine

3. **Case that the indicator keeps blinking by 2Hz after aforementioned Solution 2 is carried out.**

Step	Action	Yes	No
1	Check the air pressure and wear of all tires. Were problems found?	Try **Solution 2** after adjust the air pressure and replace worn tires.	Go to Step 2
2	Can the transfer lever be operated from High to 4L or vice versa?	Go to Step 3	Disconnection of the motor actuator harness wiring. Trace this chart from the start after repair or replace. Faults on the motor actuator. Trace this chart from the start after replace. Internal faults of transfer case. Disassemble the transfer case for check. Trace this chart from the start after repair or replace.
3	Pull out the hoses from vacuum actuator and operate 4WD switch. Is there negative pressure on either of hoses?	Go to Step 4	Faults on the transfer position switch or its harness. Trace this chart from the start after repair or replace. Faults on the VSV main body, its harness or vacuuming system. Trace the front axle diagnosis chart in this section. After that, trace this chart from the start.
4	Check the axle switch. Were problems found?	Internal faults on axle switch. Trace this chart from the start after replace.	Disconnection on the axle harness. Trace this chart from the start after repair or replace. Faults on Front Axle ASM. Trace the front axle diagnosis chart in this section. After that, trace this chart from the start.

Downloaded from www.Manualslib.com manuals search engine

Fault on switching from 4WD to 2WD

1. **Case that indicator does not blink nor turn out.**

Step	Action	Yes	No
1	Does the indicator turn out by ignition off?	Go to Step 2	Short circuit of the indicator harness.
2	Is the 4WD switch on 2WD position?	Disconnection on the 4WD switch harness or breakdown of the 4WD switch in open state. Trace this chart from the start after repair or replace.	Turn the 4WD switch to 2WD position. Trace this chart from the start.

Downloaded from www.Manualslib.com manuals search engine

2. **Case that indicator keeps 2Hz blinking after aforementioned Solution 3 is carried out.**

Step	Action	Yes	No
1	Check the air pressure and wear of all tires. Were problems found?	Try **Solution 3** after adjust the air pressure and replace worn tires.	Go to Step 2
2	Can the transfer lever be operated from High to 4L or vice versa?	Faults on the harness wiring of motor actuator. Trace this chart from the start after repair or replace. Internal faults on transfer case. Disassemble the transfer case for check. Trace this chart from the start after repair or replace. Faults on the motor actuator. Trace this chart from the start after or replace.	Go to Step 3
3	Pull out the hoses from vacuum actuator and operate 4WD switch. Is there negative pressure on either of hoses?	Go to Step 4	Faults on the transfer position switch or its harness. Trace this chart from the start after repair or replace. Faults on the VSV main body, its harness or vacuuming system. Trace the front axle diagnosis chart in this section. After that, trace this chart from the start.
4	Check the axle switch. Were problems found?	Internal faults on axle switch. Trace this chart from the start after replace. Faults on Front Axle ASM. Trace the front axle diagnosis chart in this section. After that, trace this chart from the start.	Short circuit (body short) or disconnection of the axle harness. Trace this chart from the start after repair or replace.

Downloaded from www.Manualslib.com manuals search engine

3. **Case that indicator's blinking changes to 4Hz after aforementioned Solution 4 is carried out.**

Step	Action	Yes	No
1	Can the transfer lever be operated from High to 4L or vice versa?	Faults on the harness wiring of motor actuator. Trace this chart from the start after repair or replace. Faults on the motor actuator. Trace this chart from the start after replace. Internal faults on transfer case. Disassemble the transfer case for check. Trace this chart from the start after repair or replace.	Faults on the 4WD control unit. Trace this chart from the start after replace.

Downloaded from www.Manualslib.com manuals search engine

Front Axle Diagnosis

- When the 4WD switch is operated from 4WD to 2WD, indicator light does not go out.

Step	Action	Yes	No
1	Drive slow 100 — 200m after a few minutes" idling. Has indicator light gone out?	All right.	Go to Step 2
2	Jack up front tires. Does the right side of front wheel rotate when the left side of front wheel is rotated?	Go to Step 4	Go to Step 3
3	1. Check the actuator switch. 2. Check the circuit to indicator. Was a problem found?	Trace this chart from the start after repair or replace.	Disassemble axle ASM for check. Trace this chart from the start after repair or replace.
4	1. Check the VSV valve. 2. Check the circuit to VSV valve. Was a problem found?	Trace this chart from the start after repair or replace.	Go to Step 5
5	Is vacuum piping all right? (tank, hose, & pipe damage or trouble)	Go to Step 6	Trace this chart from the start after repair or replace.
6	Does actuator work all right?	Trace this chart from the start.	Disassemble axle ASM for check. Trace this chart from the start after repair or replace.

Downloaded from www.Manualslib.com manuals search engine

- When the 4WD switch is operated from 2WD to 4WD, indicator light is not actuated.

Step	Action	Yes	No
1	Drive slow 100 — 200m after a few minutes" idling. Has indicator light actuated?	All right.	Go to Step 2
2	Jack up front tires. Does not the right side of front wheel rotate when the left side of front wheel is rotated?	Go to Step 4	Go to Step 3
3	1. Check the actuator switch. 2. Check the circuit to indicator. Was a problem found?	Trace this chart from the start after repair or replace.	Disassemble axle ASM for check. Trace this chart from the start after repair or replace.
4	1. Check the VSV valve. 2. Check the circuit to VSV valve. Was a problem found?	Trace this chart from the start after repair or replace.	Go to Step 5
5	Is vacuum piping all right? (tank, hose, & pipe damage or trouble)	Go to Step 6	Trace this chart from the start after repair or replace.
6	Does actuator work all right?	Trace this chart from the start.	Disassemble axle ASM for check. Trace this chart from the start after repair or replace.

Downloaded from www.Manualslib.com manuals search engine

Shift On The Fly Vacuum Piping And Electric Equipment

Vacuum piping diagram

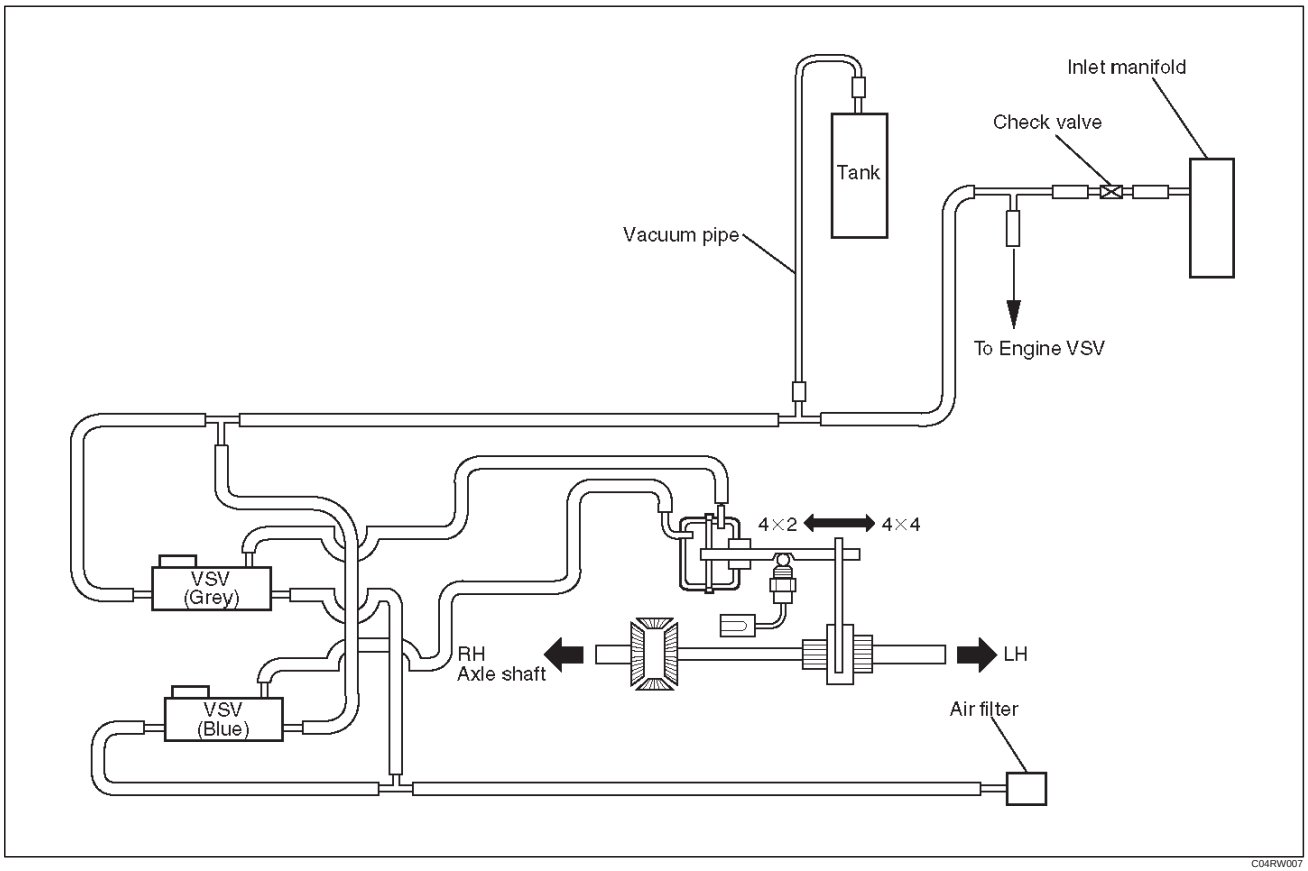

C04RW007

VSV Assembly, Actuator Assembly

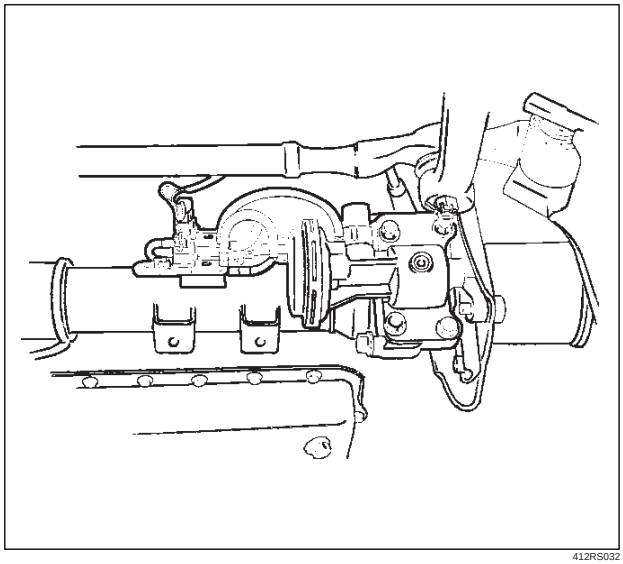

412RS032

Vacuum Tank

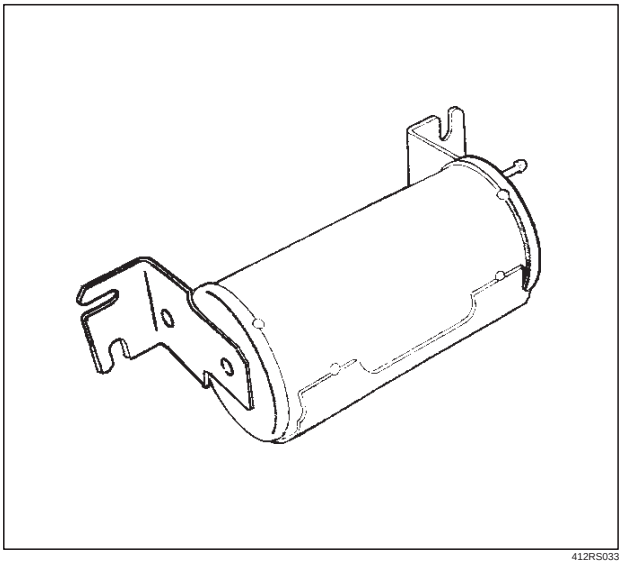

412RS033

Downloaded from www.Manualslib.com manuals search engine

Inspection And Repair

Vacuum Piping

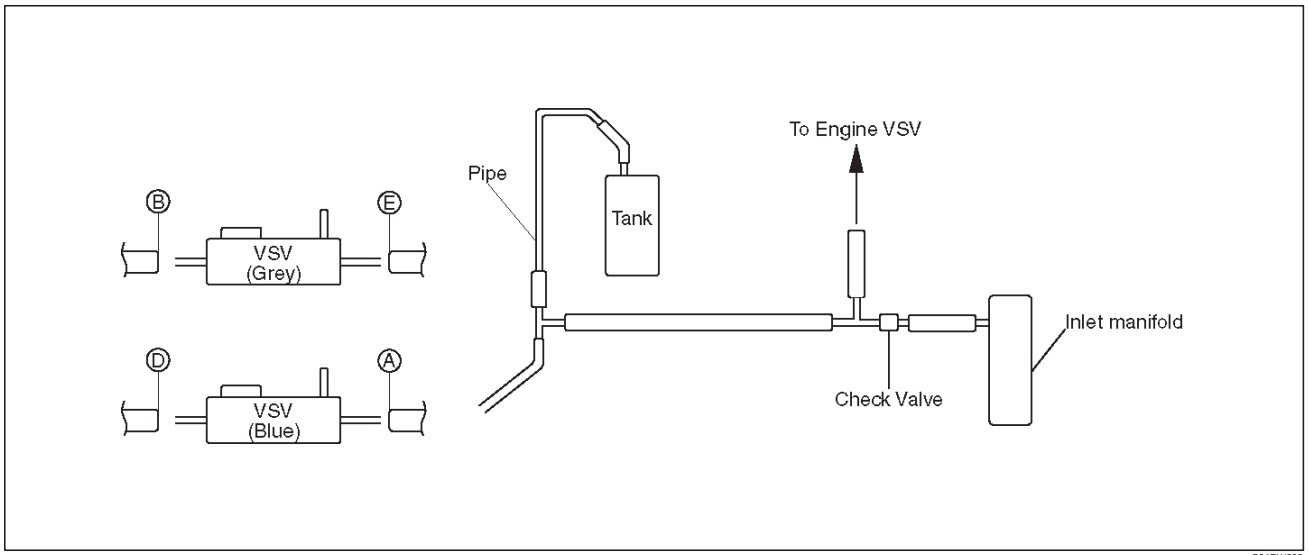

C04RW008

1. Pull out the Hose A in figure and install a vacuum gauge.
2. Plug up Hose B in figure to prevent the leak of vacuum.
3. Start the engine and measure vacuum 2 or 3 minutes afterward.
4. Repeat 1) and 2) but with Hose A plugged and Hose B pulled out.
5. If vacuum measures –400mmHg, or if it shows a sudden drop immediately after engine stop, inspect the hose, tank, and pipe for damage.

NOTE: Be careful not to permit the entry of dust and water during inspection.

6. Pull out Hose D in above illustration.
7. Plug Hose E in above illustration.
8. Make sure that Hose D in above illustration is under atmospheric pressure.
9. Pull out Hose E and plug Hose D, and make sure that Hose E is under atmospheric pressure.
10. If Check 8) or 9) has revealed stoppage, check and see that there is no bend, foreign matter in the hose or in the filter. If there is trouble, repair or replace.

Check Valve

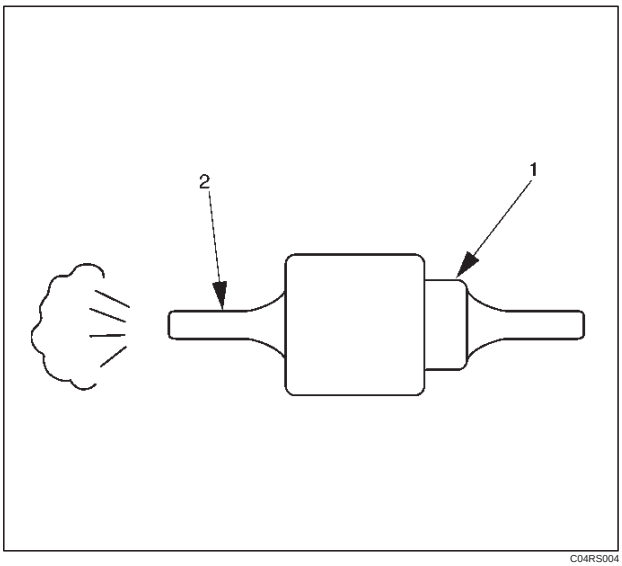

C04RS004

1. Apply vacuum from the orange colored side(1).

   Vacuum:–400mmHg
2. Check leakage of vacuum.
3. Make sure that vacuum cannot be applied from the black colored side(2).
4. If vacuum is not applicable as much as –400mmHg, and if there is resistance on the intake side, replace with a new check valve.

Downloaded from www.Manualslib.com manuals search engine

VSV Assembly

Inspect the vehicle side harness as follows:

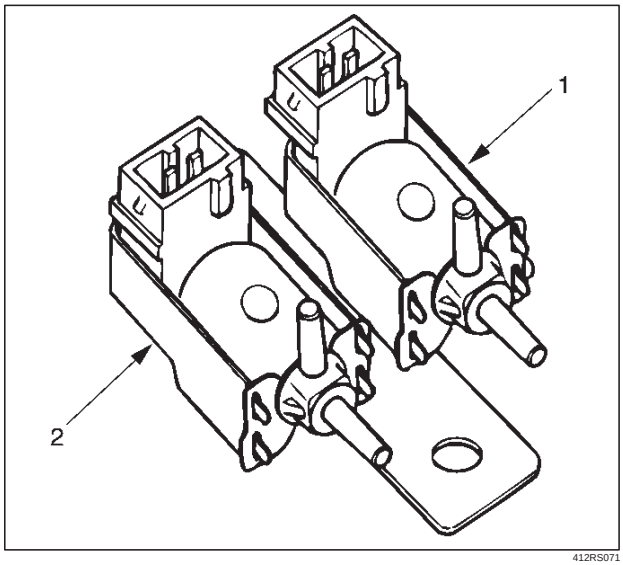

412RS071

Legend
(1) Grey
(2) Blue

1. Remove connector.
2. Shift transfer lever to 2H and start the engine.

NOTE: Do not move the vehicle while inspection.

3. Make sure that there is continuity in the vehicle side of harness. If there is no continuity, check transfer shift switch and wiring.

Inspect both VSVs as follows:

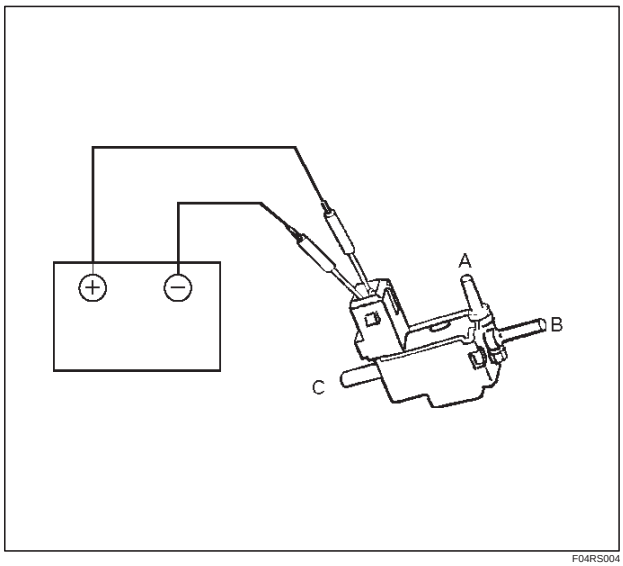

F04RS004

1. With battery not connected (Usual).
   A–C:There is continuity
   B:Closed
2. With battery connected
   A – B:There is continuity
   C:Closed
3. If 1) and 2) fail, replace with a new VSV.

Axle Position Switch

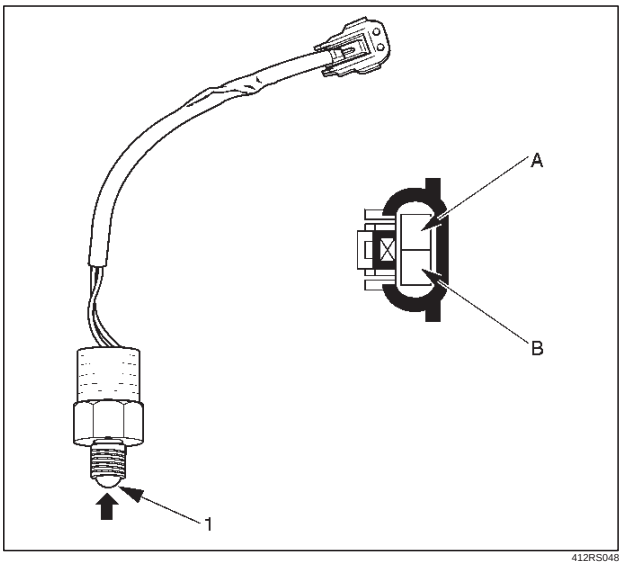

412RS048

1. With ball (1) being free
   A – B:There is continuity
2. With ball forced into the switch
   A – B:No continuity
3. If 1) and 2) fail, replace with a new switch.

Motor Actuator Assembly

Inspect the function of the motor actuator assembly as follows:

Downloaded from www.Manualslib.com manuals search engine

1. Disassemble the motor actuator from transfer rear case.

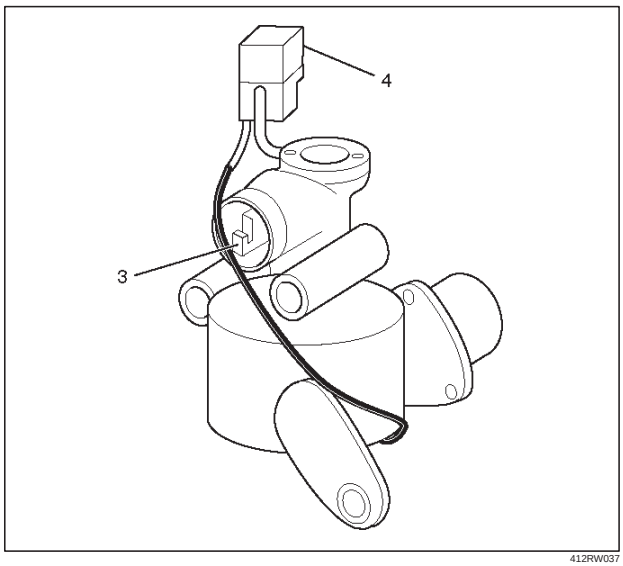

412RW037

Legend
(3) Shift Rod
(4) Connector

2. Connect the terminals as shown in figure.

Shift rod of the motor actuator moves and stops at 4WD position.

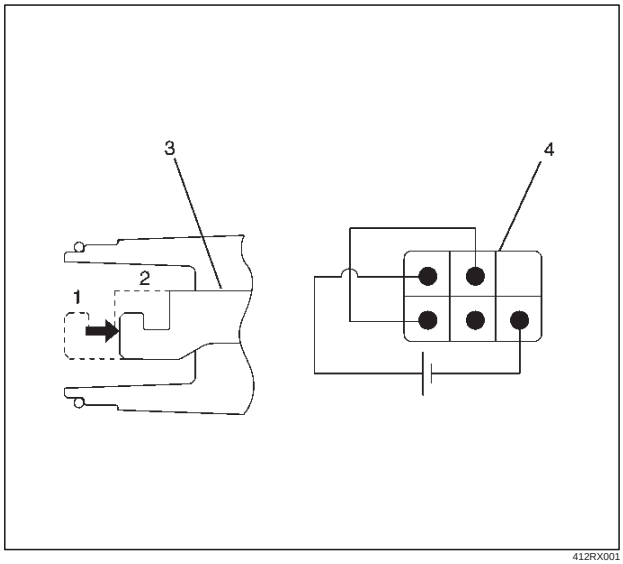

412RX001

Legend
(1) 2WD
(2) 4WD
(3) Shift Rod
(4) Connector

3. Connect the terminals as shown in figure.

Shift rod of the motor actuator moves and stops at 2WD position.

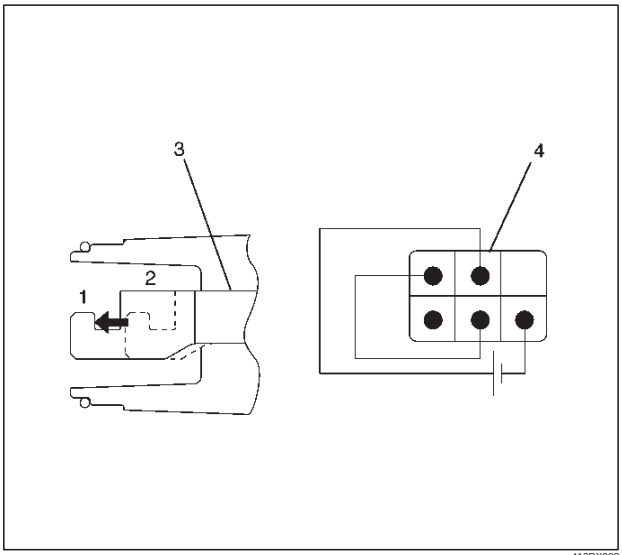

412RX002

Legend
(1) 2WD
(2) 4WD
(3) Shift Rod
(4) Connector

4. If 2) and 3) fail, replace with a new motor actuator.

Transfer Position Switch

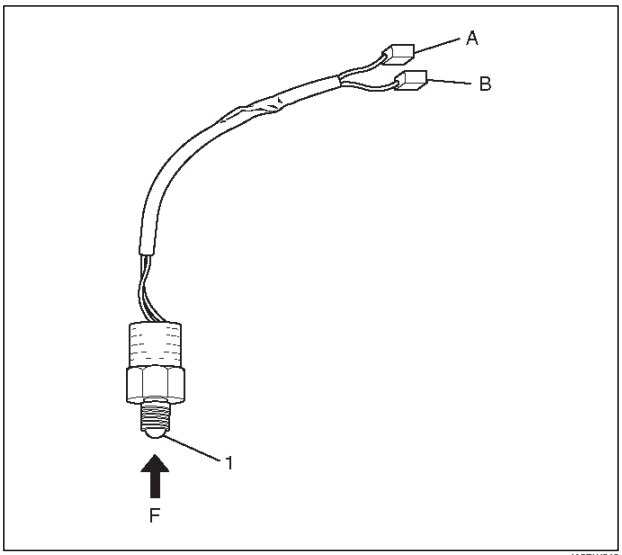

412RW040

Legend
(1) Ball

1. With ball being free.

A–B : There is continuity.

2. With ball forced into the switch.

A–B : No continuity.

3. If 1) and 2) fail, replace with a new switch.

Downloaded from www.Manualslib.com manuals search engine

4WD Control Unit

4WD Control Unit Associated Parts

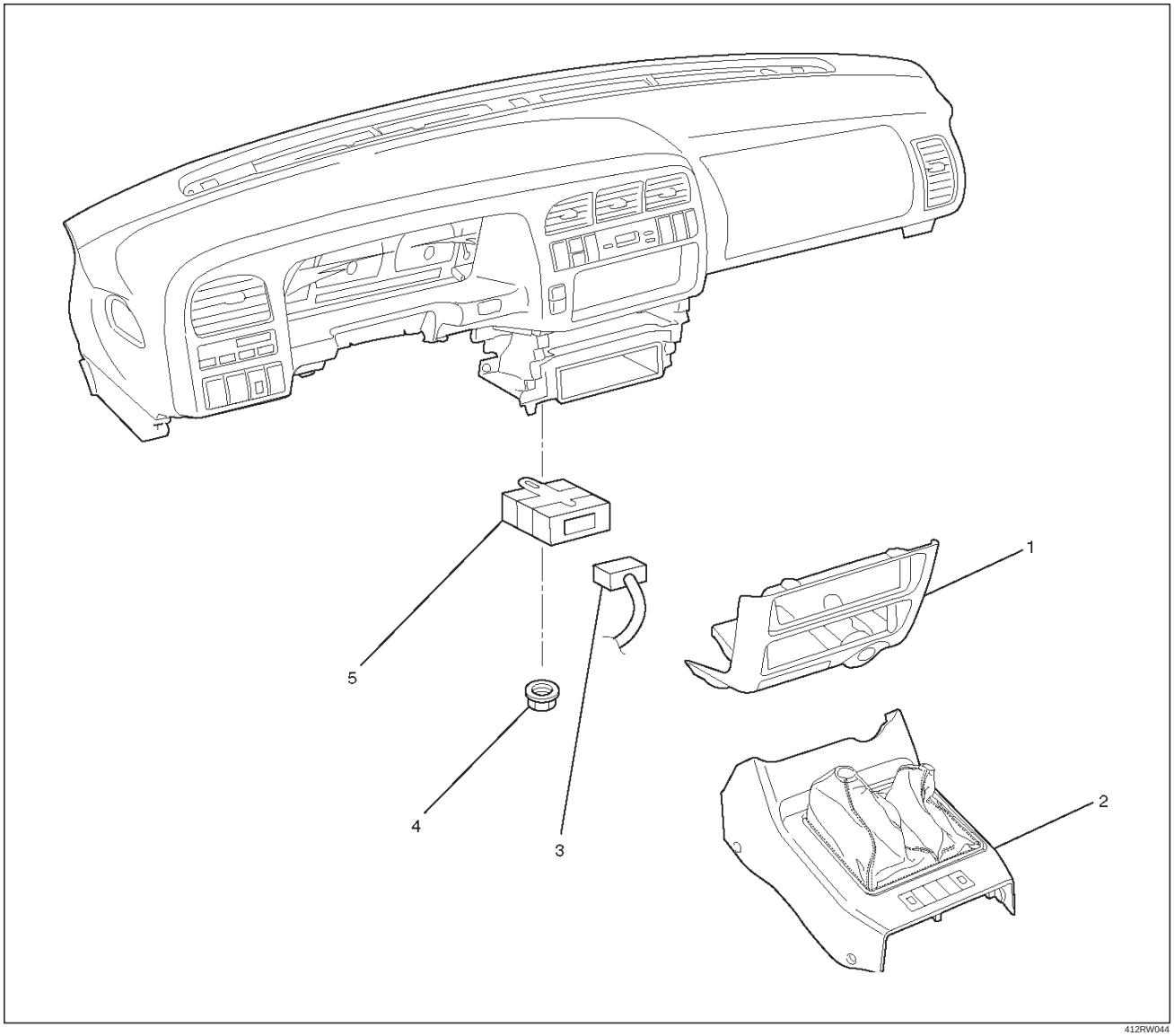

Legend

(1) Lower Cluster Assembly
(2) Front Console Assembly
(3) Harness Connector
(4) Nut
(5) 4WD Control Unit

Downloaded from www.Manualslib.com manuals search engine

Removal

1. Remove lower cluster assembly and front console assembly.
   Refer to Interior Trim in Body and Accessories section.
2. Remove nut.
3. Remove 4WD control unit.
4. Disconnect harness connector (1).

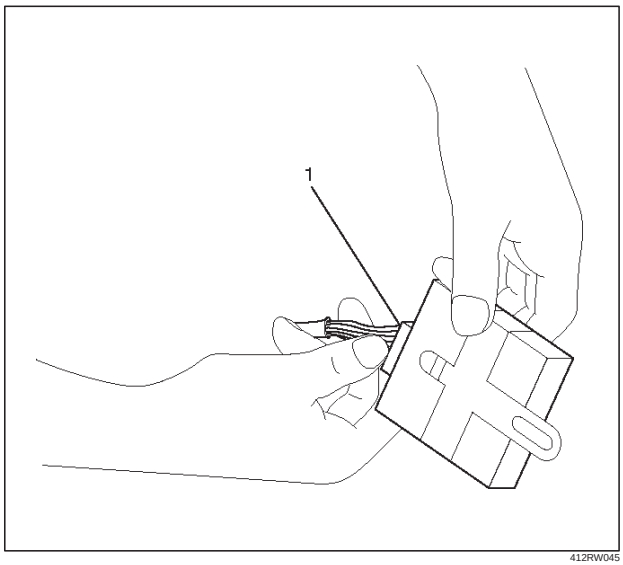

412RW045

Legend

(1) Harness Connector

Installation

1. Connect harness connector, then install 4WD control unit.
2. Install lower cluster assembly and front console assembly.

Downloaded from www.Manualslib.com manuals search engine

TROOPER

DRIVELINE/AXLE

DRIVELINE CONTROL SYSTEM (TOD)

CONTENTS

Service Precaution 4B2–1
General Description 4B2–2
System Components 4B2–4
Parts Location 4B2–4
Functions of Indicator Lamp 4B2–8
Diagnosis 4B2–11
Basic Diagnostic Flow Chart 4B2–15
Parts Location 4B2–16
Circuit Diagram 4B2–17
Connector List 4B2–20
Checking Failed Pin 4B2–22
Checking Failed TOD Control Unit Pin 4B2–25
Tech 2 Scan Tool 4B2–26
Diagnostic Trouble Codes 4B2–29
Diagnosis from Trouble Codes 4B2–30
Trouble Diagnosis Depending on The Status of TOD Indicator 4B2–54
Diagnosis from Symptom 4B2–83

Service Precaution

WARNING: THIS VEHICLE HAS A SUPPLEMENTAL RESTRAINT SYSTEM (SRS). REFER TO THE SRS COMPONENT AND WIRING LOCATION VIEW IN ORDER TO DETERMINE WHETHER YOU ARE PERFORMING SERVICE ON OR NEAR THE SRS COMPONENTS OR THE SRS WIRING. WHEN YOU ARE PERFORMING SERVICE ON OR NEAR THE SRS COMPONENTS OR THE SRS WIRING, REFER TO THE SRS SERVICE INFORMATION. FAILURE TO FOLLOW WARNINGS COULD RESULT IN POSSIBLE AIR BAG DEPLOYMENT, PERSONAL INJURY, OR OTHERWISE UNNEEDED SRS SYSTEM REPAIRS.

CAUTION: Always use the correct fastener in the proper location. When you replace a fastener, use ONLY the exact part number for that application. ISUZU will call out those fasteners that require a replacement after removal. ISUZU will also call out the fasteners that require thread lockers or thread sealant. UNLESS OTHERWISE SPECIFIED, do not use supplemental coatings (Paints, greases, or other corrosion inhibitors) on threaded fasteners or fastener joint interfaces. Generally, such coatings adversely affect the fastener torque and the joint clamping force, and may damage the fastener. When you install fasteners, use the correct tightening sequence and specifications. Following these instructions can help you avoid damage to parts and systems.

Downloaded from www.Manualslib.com manuals search engine

General Description

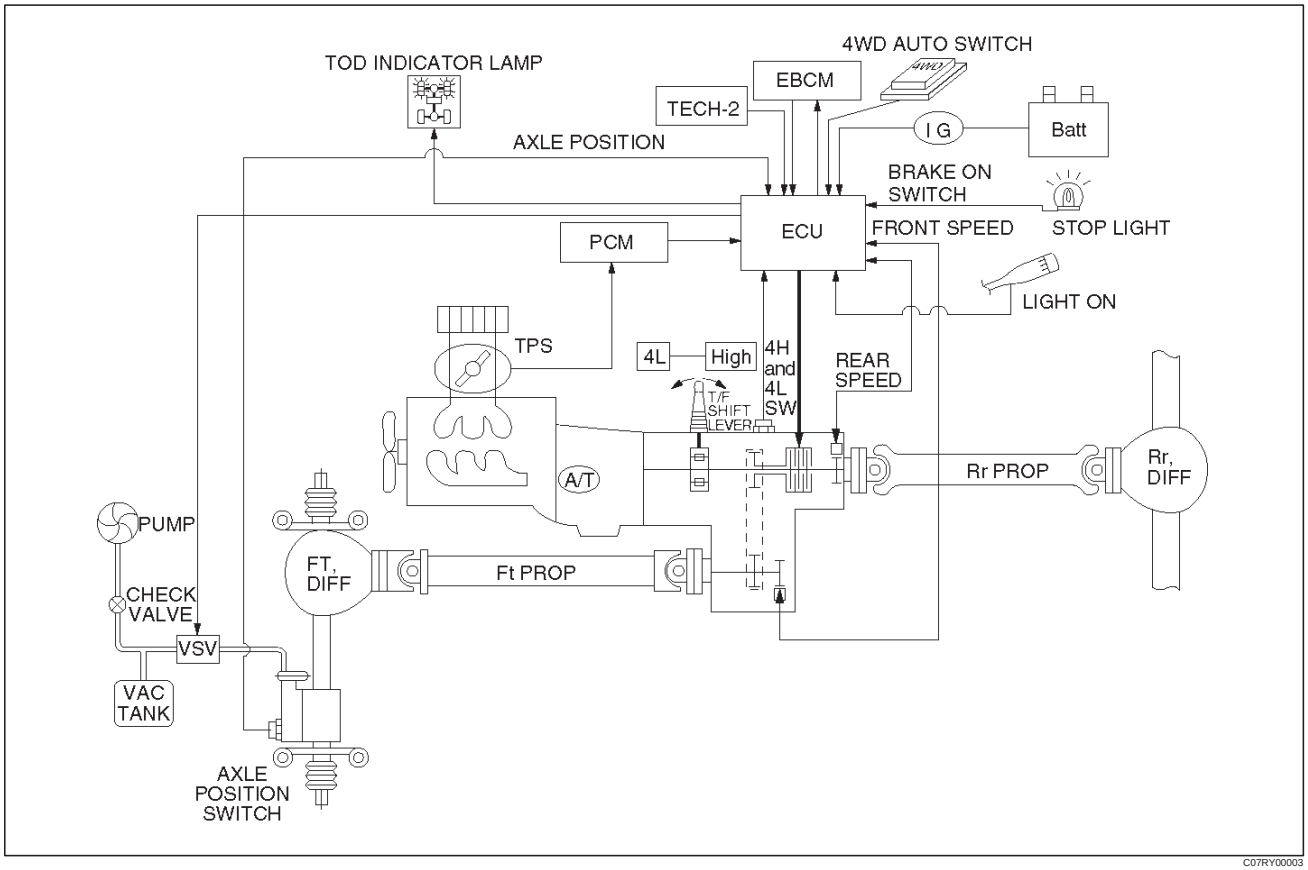

TOD (Torque on Demand) system is traction state control system to vehicle.

Transfer Position and Drive Mode

Three drive modes can be selected through operation of 4WD switch and transfer lever.

Transfer Position	4WD AUTO SWITCH	Mode	Drive mode
HIGH	ON	2H	Rear wheel drive
	OFF	TOD	Electronically controlled torque split four wheel drive
4L	ON/OFF	4L	Low-speed mechanical lock-up four wheel drive

The electronic control unit (ECU) judges the signals from the transfer lever and controls the transfer drive mode and shift-on-the-fly system status.

TOD Control

The TOD position usually drives the rear wheels, and transmits the torque to the front wheels with the help of electronically controlled torque split mechanism according to running conditions encountered. The driving force is directly transmitted to the rear wheels. This force is split by the transfer and delivered to the front wheels. The magnitude of the torque transmitted to the front wheels is controlled by changing the pressing force of the electromagnetic multi plate disk clutch built in the transfer unit. The pressing force of the clutch is controlled by changing the voltage to the electromagnetic coil mounted to the rear of the clutch. When the clutch is completely disengaged, the rear wheels are driven. When the clutch is completely engaged, a rigid four wheel drive mode is obtained. The torque split status is controlled continuously between the rear wheel and four wheel drive modes. This system includes front and rear speed sensors, and receives throttle position sensor information from the PCM.

The control unit receives signals sent from these sensors and changes the pressing force of the electromagnetic multi plate disk clutch to determine the torque distribution on the front and rear wheels. Therefore, when the slip of

Downloaded from www.Manualslib.com manuals search engine

the rear wheels is increased against the current torque level in the normal rear wheel drive mode, the control unit detects the slip condition, determines the optimum torque based on the feedback control logic, and increases the torque to the front wheels.

The control unit uses the signal from the throttle position sensor to predict the future vehicle condition and the intention of the driver with respect to acceleration and deceleration, and determines the initial torque distribution using these data and the information from the speed sensors.

In case of small circle turning in the parking lot, for example, the control unit minimizes the clutch pressing force to restrict a braking phenomenon. When the ABS becomes active, the control unit optimizes the clutch pressing force to ensure stable braking.

TOD Indicator Control

The TOD indicator on the instrument panel informs the driver of the current working status of the transfer unit. The information consists of two items: the drive mode (2H, TOD, 4L, transition) and the torque split status of the TOD (torque distribution level). The indicator can display occasional errors and corresponding error codes.

Downloaded from www.Manualslib.com manuals search engine

System Components

Parts Location

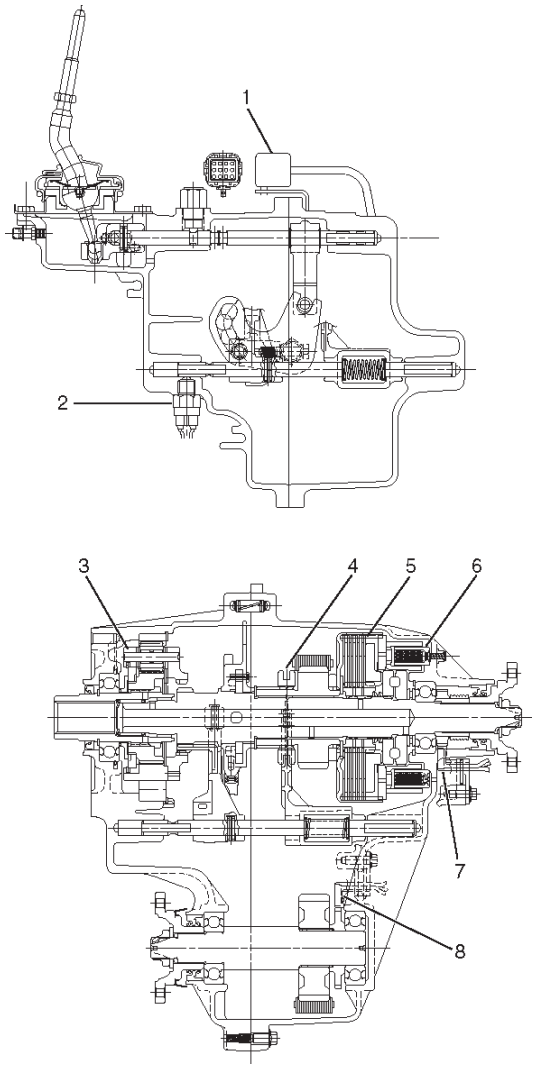

A07RY00002

Legend

(1) T/F Connector
(2) 4H Switch and 4L Switch
(3) High-Low Planetary Gear Set
(4) Mechanical Lock
(5) Multi Plate Disk Clutch Pack
(6) Electromagnetic Coil
(7) Rear Speed Sensor
(8) Front Speed Sensor

Downloaded from www.Manualslib.com manuals search engine

Front and Rear Speed Sensors

The sensors are built in the transfer case, and detect the rotation of rotors directly coupled to the propeller shafts. Thirty rectangular pulses are output per one rotation of the propeller shaft.

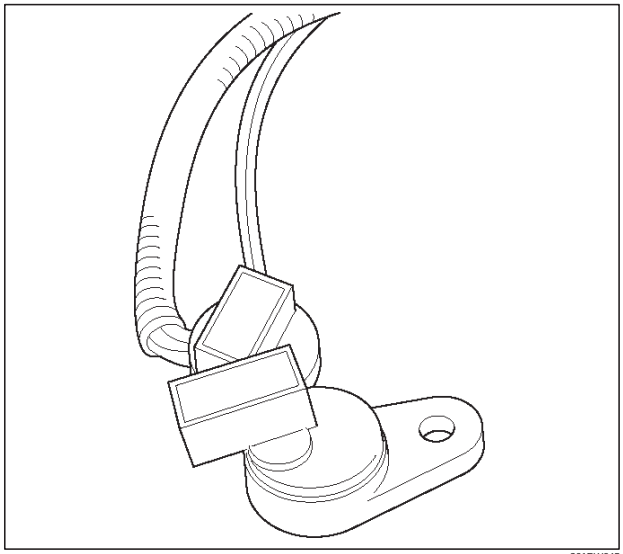

261RW045

Electromagnetic Coil

Receives the duty signals from the TOD control unit and controls the pressing force of the clutch pressure cam.

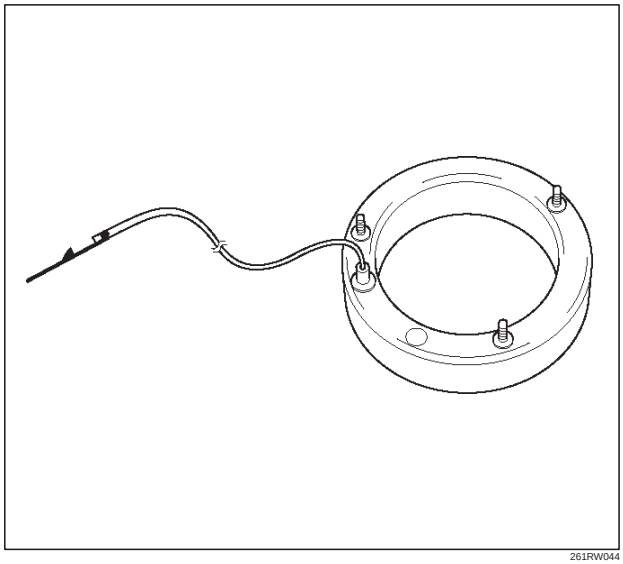

261RW044

Multi Plate Disk Clutch Pack

Transmits the torque determined by the clutch pressing force to the front propeller shaft via the front drive chain.

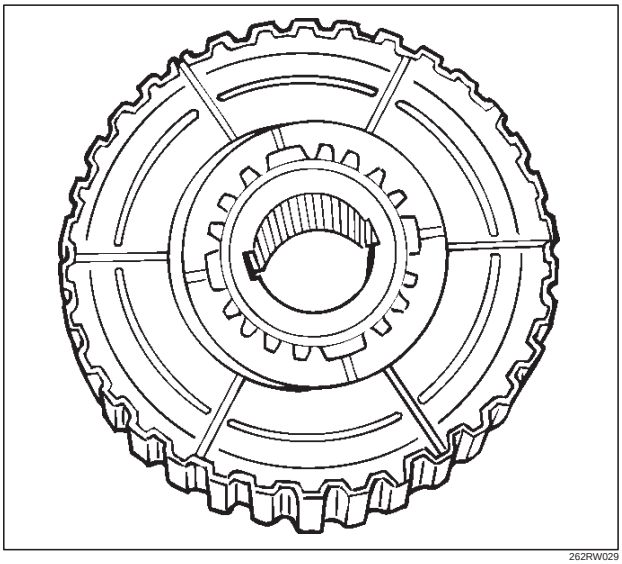

262RW029

Mechanical Lock Sleeve

Couples the front and rear propeller shaft mechanically when the transfer shaft is in the 4L position.

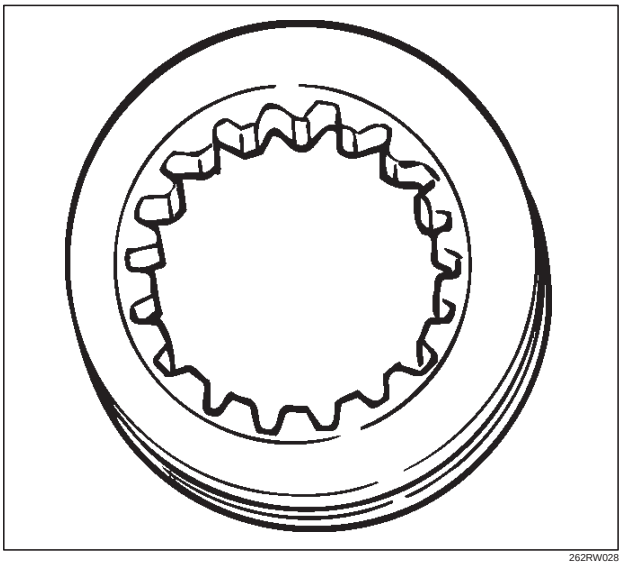

262RW028

Downloaded from www.Manualslib.com manuals search engine

High-Low Planetary Gear Set

Establishes an auxiliary transmission mechanism. When the transfer shift lever is set to the 2H or TOD position, the reduction gear ratio is 1.000 and the corresponding driving force is generated. When the transfer shift lever is set to the 4L position, the reduction gear ratio is 2.480 and the corresponding driving force is generated.

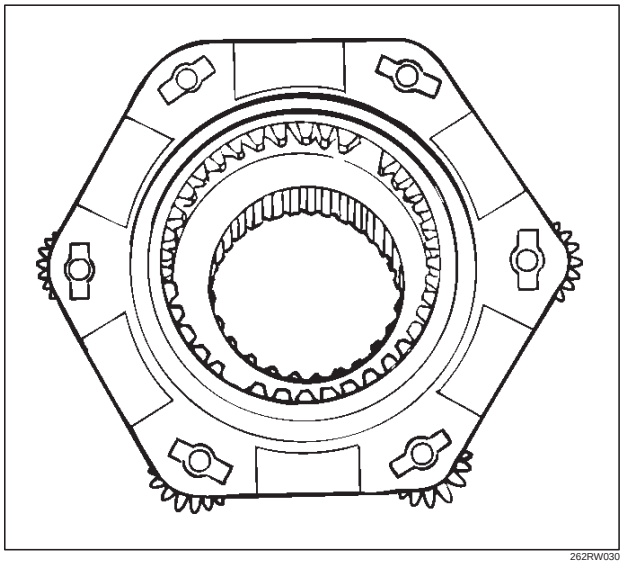

262RW030

4H and 4L Switch

Detects the shift position of the transfer from the movement of the transfer lever and outputs signals to the TOD control unit.

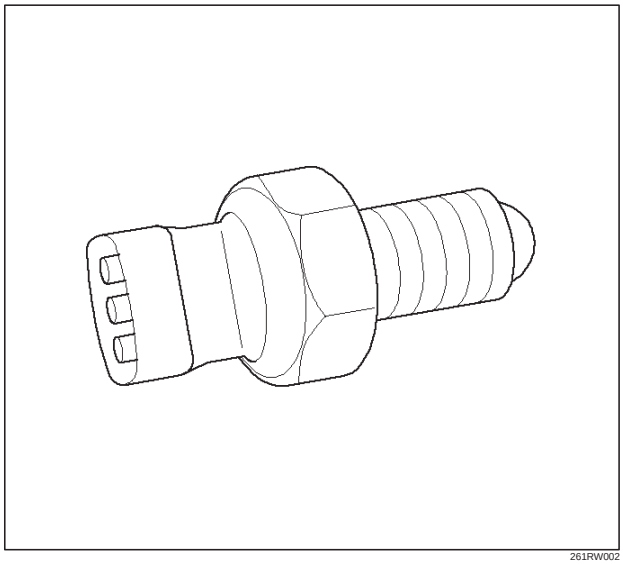

261RW002

Transfer Connector

Transmits the input and output signals of the speed sensors, electromagnetic coil, and 4H and 4L switche to the vehicle harness. A waterproof 12-pin type is used.

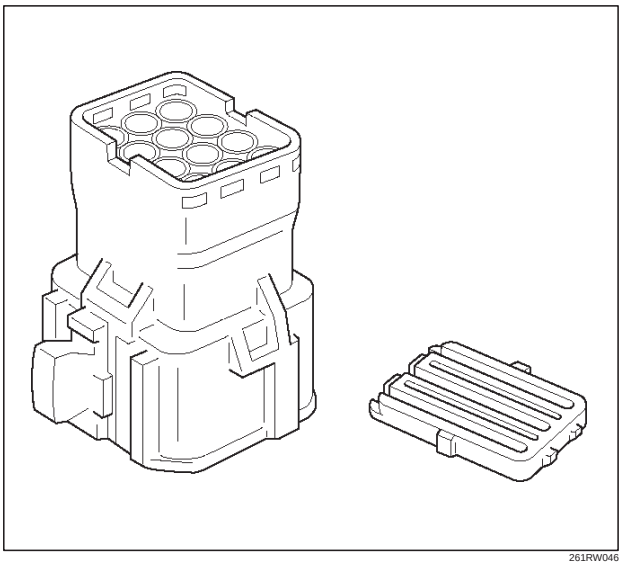

261RW046

TOD Indicator Lamps (on the instrument panel)

Inform the following items.

- Bulb check
- Drive mode
- ABS IN status
- BRAKE ON status

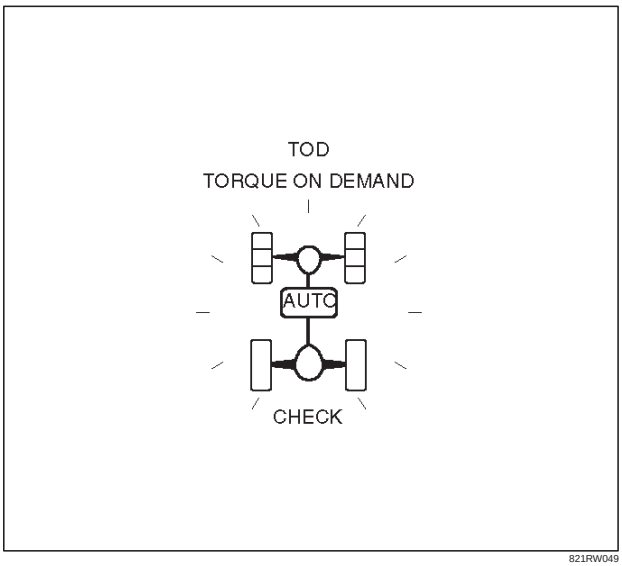

821RW049

Downloaded from www.Manualslib.com manuals search engine

Check Lamp

Inform the following items.

- Bulb check
- Fail (fail alarm)
- Trouble code

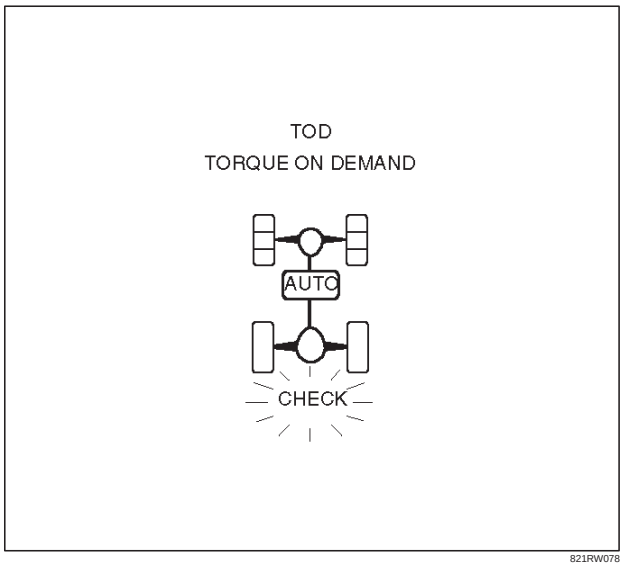

821RW078

TOD ECU

This control unit is mounted to the front right hand seat via a special bracket.

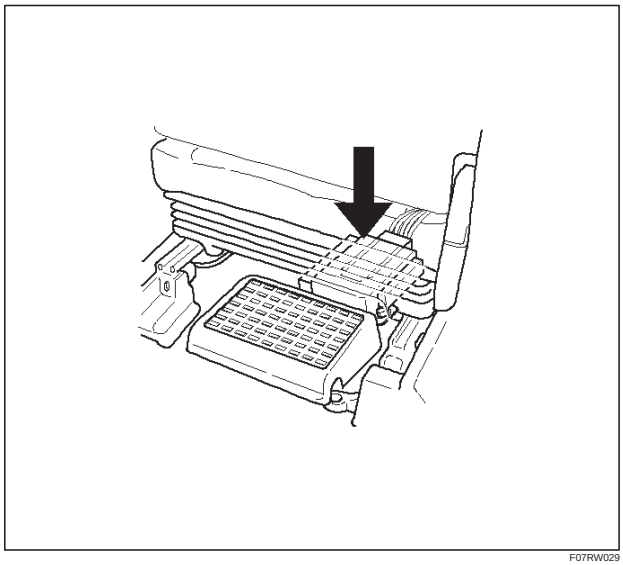

F07RW029

Downloaded from www.Manualslib.com manuals search engine

Functions of Indicator Lamp

TOD Indicator Lamps

Output condition					Indicator indicate state	Remark	4WD Auto switch state	Each sw state			
ECU Terminal No.								4WD Auto switch point of contact	4H SW	4L SW	AXLE SW
17	6	18	19	8							
1	1	1	1	0	2H Mode			ON	OFF	OFF	OFF
0	0	0	1	0	4L Mode			ON / OFF	OFF	ON	ON
1	1	1	1	1	N Mode			ON / OFF	ON	ON	OFF
1	1	1	0	0	TOD Mode1	Traction distribution about 0:100		OFF	OFF	OFF	ON
1	1	0	0	0	TOD Mode2	Traction distribution about 15:85					
1	0	0	0	0	TOD Mode3	Traction distribution about 30:70					
0	0	0	0	0	TOD Mode4	Traction distribution about 50:50					

1=12V 0=GND

C07RY00017

Indication of Drive Mode

The transfer lever position signals are transmitted to the TOD indicator lamp control unit according to the conditions listed below.

Indication During Transition of Transfer Lever

When the transfer lever is shifted, and the signals from the AXLE switch do not comply with the signal conditions of the 4H and 4L switch, the transfer lever position signals generated by the 4H and 4L switch and the N position signals are repeatedly output at an interval of 0.8 second.

NOTE: After the transfer lever is set to the specified position and the AXLE switch generates compliant signals, the normal output status is returned.

Downloaded from www.Manualslib.com manuals search engine

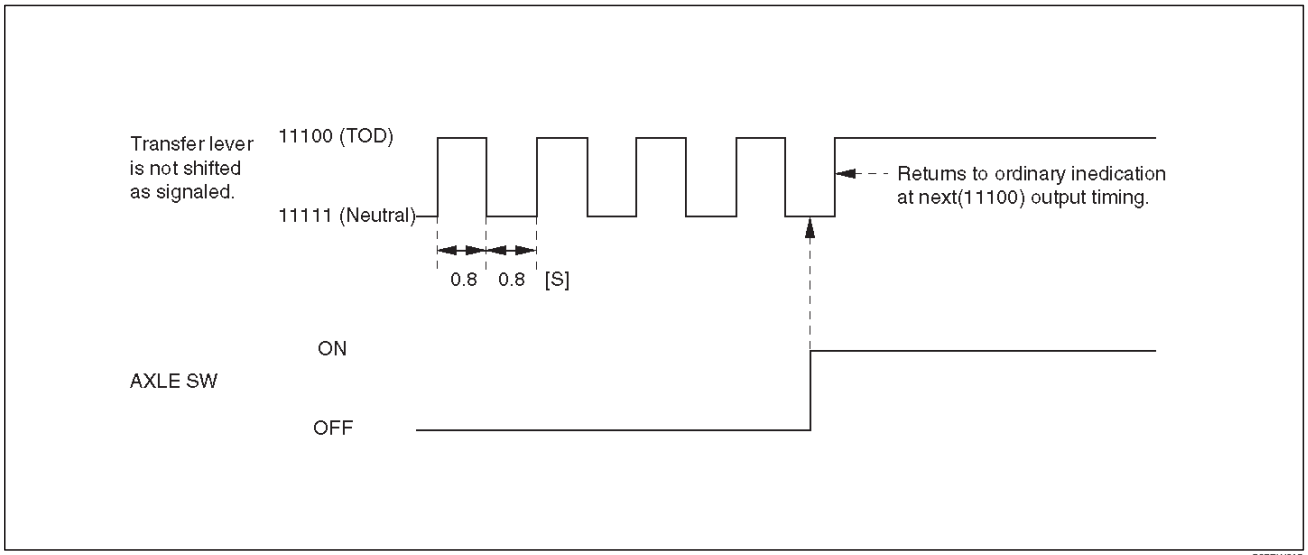

C07RW015

Bulb Check

When the starter switch is turned on, the TOD indicator lamps go on as shown below.

NOTE: Once the starter switch is turned on, all the TOD indicator lamps are lit for two seconds even if the transfer lever is in any position.

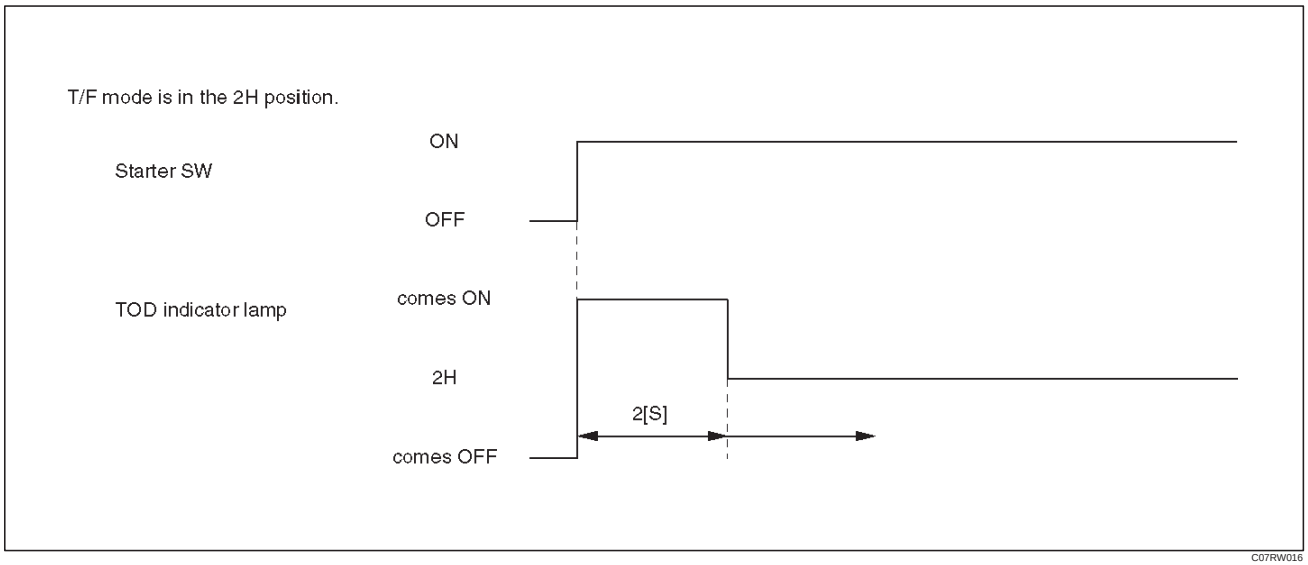

C07RW016

Downloaded from www.Manualslib.com manuals search engine

Simplified checking method of ABS IN and BRAKE ON signals:

In the event that any of the signal inputs listed below are observed while the self-diagnostic code is being displayed (the self-diagnostic connector is short-circuited to GND), you can simply check the ABS IN and BRAKE ON signals as shown in the figures below.

1	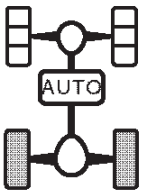	• In case of ABS signal being inputted, TOD indicator will light as illustrated.
2	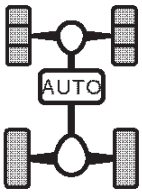	• In case of BRAKE ON signal being inputted, TOD indicator will light as illustrated.
3	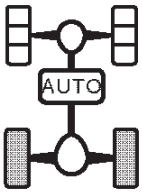	• When both the ABS and BRAKE ON signals are inputted simultaneously, ABS signal is indicated.
4	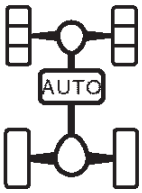	• In cases other than “1, 2, 3”, the indication is always as illustrated. (This is light-off mode) • TOD indicator light returns to usual control (mode) at 12 km/h or more.

C07RW017–1

Check Lamp

Check Lamp Bulb Check

When the starter switch is turned on in the normal state, the control unit turns on the CHECK lamp to check the bulb.

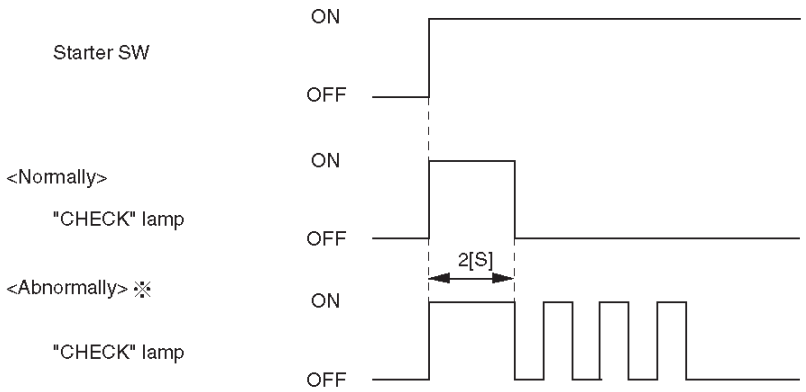

C07RW019

Downloaded from www.Manualslib.com manuals search engine

Diagnosis

General Information Diagnosis

The troubles on TOD are classified into the group that can be identified by the lighting status of the TOD indicator lamps and those that can be recognized as abnormal phenomena of the vehicle by the driver.
The troubles that can be identified by the lighting status of the TOD indicator lamps are examined by the procedures “Diagnosis from Trouble Codes” and “Trouble Diagnosis Depending on The Status of TOD Indicator”. The troubles that can be recognized as abnormal phenomena of the vehicle by the driver are examined by the procedure “Diagnosis from symptom”.

Self-diagnosis

The control unit has a function of self-diagnosis. If a trouble occurs in the course of system startup, the control unit blinks the CHECK lamp and saves the trouble code.

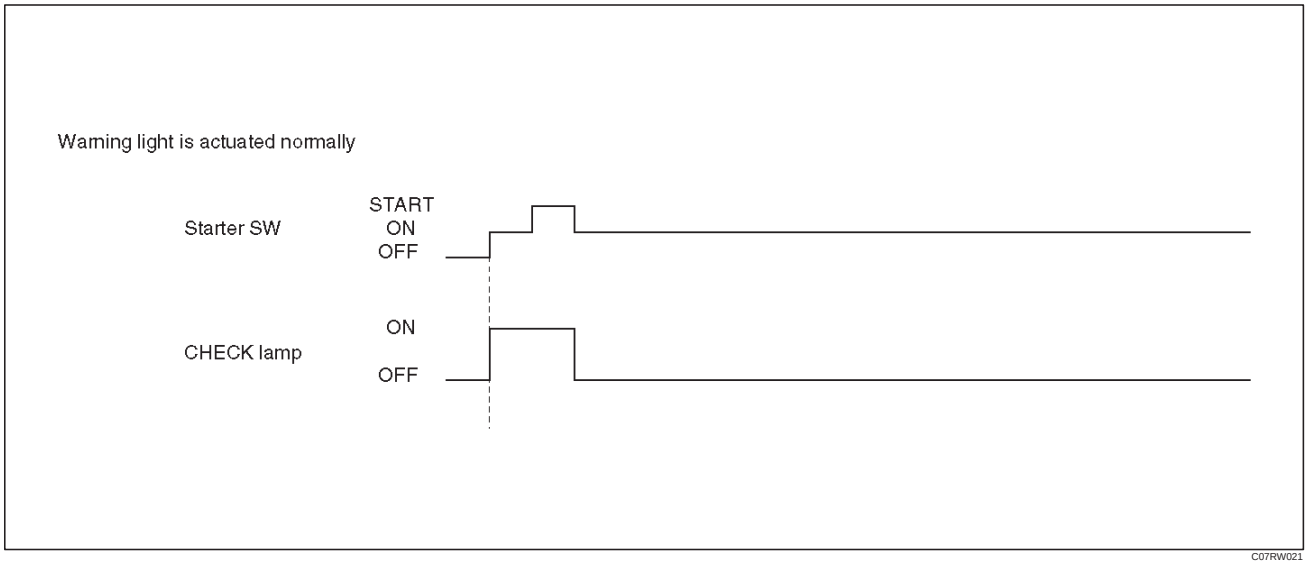

C07RW021

NOTE: If an intermittent fault occurs, the control unit stops blinking upon removal of the fault. The trouble code is saved to the control unit.

Downloaded from www.Manualslib.com manuals search engine

Indication Method of Trouble Code

- Short-circuit terminal 8 of the self-diagnostic connector to GND to display the trouble code on the CHECK lamp.
- If no trouble codes exist, code “12” is displayed continuously.
- If trouble codes exist, code “12” is displayed three times, and the trouble codes, starting from the smaller code number, are displayed three times respectively.

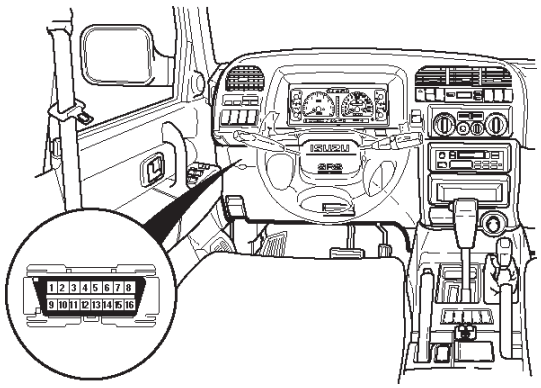

821RW021

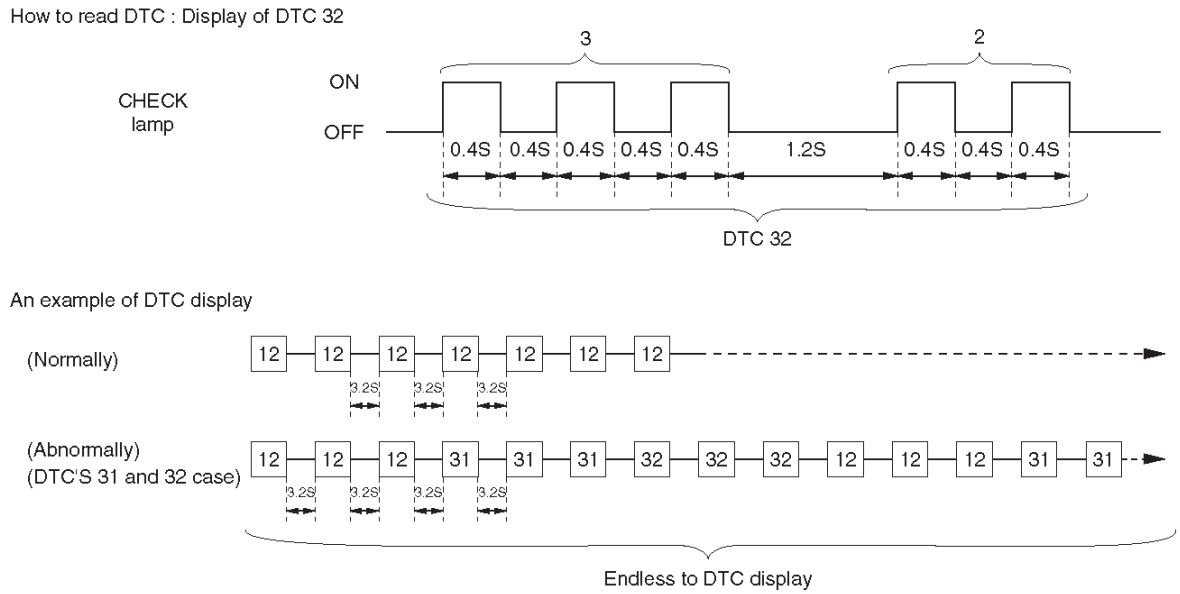

C07RY00018

Downloaded from www.Manualslib.com manuals search engine

How to Clear The Trouble Code

The trouble codes saved to the control unit can be deleted by the following procedure if the starter switch is being in the OFF position.

1. Shift the transfer lever to the neutral position between HIGH and 4L, and short-circuit the self-diagnostic connector.

NOTE: The neutral position between HIGH and 4L refers to the point that turns off the TOD indicator lamps. (However, be sure to check the position before short-circuiting the self-diagnostic connector.)

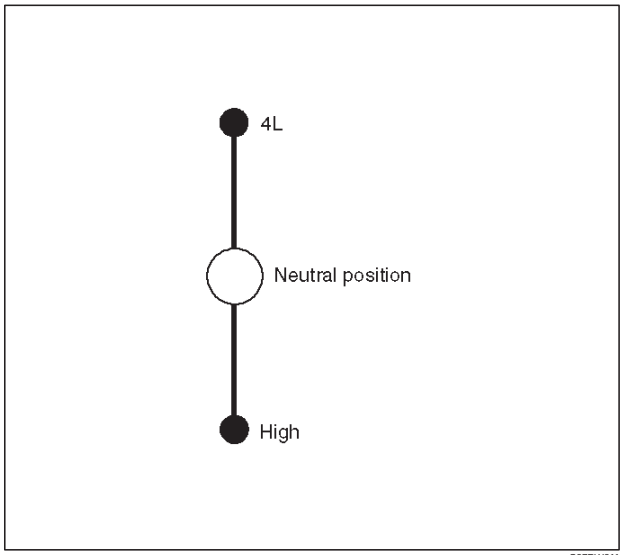

C07RW011

2. Turn on the starter switch while maintaining the state of step 1, and step on the brake pedal five times within five seconds from the first step on. (Note that "five times" includes the first step on). (The TOD indicator lamps display the 4L mode whenever the brake pedal is stepped on.)
3. If the conditions shown in steps 1 and 2 are met, clear the trouble codes saved to the control unit. (After the codes are completely deleted, the code 12 that indicates the normal condition is continuously displayed.)

Precautions on Diagnosis

Replacement of Control Unit

The control unit itself rarely fails. In most cases, the harnesses have failed (i.e. short-circuit) to cause secondary troubles. Other cases include that the cause has been unknown due to intermittent occurrence of troubles and the troubles are removed accidentally along with replacement of control unit, resulting in misjudgment of cause. Therefore, before replacing the control unit, check the connector joints and whether the unspecified current flows in the control unit due to short-circuit between harnesses.

Trouble Intermittently Observed

Troubles intermittently observed are mostly attributable to temporary imperfect connection of harnesses and connectors.

When such troubles are found, check the associated circuit according to the following procedure.

1. Check whether improper connectors are plugged in or connector terminals are completely engaged.
2. Check whether the terminals are deformed or damaged. If yes, remove the deformation or damage and connect the terminals securely.
3. It is likely that wires in the harness are falsely broken. Therefore, in examination of failed harness circuit, shake the harness for check to such extent that the harness will not be damaged.

Test Run of Failed TOD Vehicle

If the TOD indicator lamps experienced faulty operation even once in the past, the failed portion can be identified by use of the procedure "Diagnosis from Trouble Codes" or "Diagnosis from Lighting Status of TOD Indicator Lamps". If the troubles that are only recognized as abnormal phenomena of the vehicle by the driver are observed, conduct the test run in the following procedure to reproduce the faulty phenomena and diagnose the fault for each phenomenon.

1. Start the engine, and check that the TOD indicator lamps are turned on for about two seconds for initial check; the CHECK lamp goes off; and the TOD indicator lamps display the specified drive mode. (If the CHECK lamp starts blinking, read the trouble codes and identify the failed portion.)
2. While keeping the vehicle standstill, operate the 4WD switch and shift the transfer lever to change the modes: 2H mode→TOD mode→4L mode→TOD mode→2H mode. Check that the TOD indicator lamps correctly display the status whenever the mode is changed. If the transition status is displayed during the shift operation, run the vehicle a little to complete shifting.
3. Slowly start the vehicle in the TOD mode, and add the power to accelerate to at least 40 km/h and maintain the speed for about two minutes. Apply the brake to completely stop the vehicle. Repeat this test pattern at least three times.
4. Turn the steering to the right end (or left end) in the TOD mode, and slowly start the vehicle and make a circle five times. Next, conduct the same test in the 2H mode.
5. Slowly start the vehicle in the TOD mode, and accelerate to at least 40 km/h. Keep the established speed, carefully change the mode in the sequence "TOD mode→2H mode →TOD mode" while checking that the shift is complete in each mode change. After the test, apply the brake to completely stop the vehicle.
6. Slowly start the vehicle in the TOD mode, and accelerate to at least 40 km/h. Apply the brake strongly so that the ABS works, and completely stop the vehicle.

Downloaded from www.Manualslib.com manuals search engine

7. Slowly start the vehicle in the 4L mode, and accelerate to at least 20 km/h. Apply the brake to completely stop the vehicle.

If the CHECK lamp starts blinking during the test run, read the trouble codes and give appropriate maintenance according to the diagnostic procedure. If the TOD indicator lamps are lit abnormally during the run, check the lighting condition and give appropriate maintenance according to the diagnostic procedure. Even if the phenomena are not observed, try to reproduce the abnormal state reported by the customer to the possible extent.

Post-Repair Check

As long as the starter is not turned off, the TOD indicator lamps continue blinking even after the failed control unit is repaired. Therefore, upon completion of repair, be sure to turn off the starter switch once and then turn on it to conduct the test run sequence specified in steps 1 through 6 above and check that the TOD indicator lamps no longer show any faulty status.

Downloaded from www.Manualslib.com manuals search engine

Basic Diagnostic Flow Chart

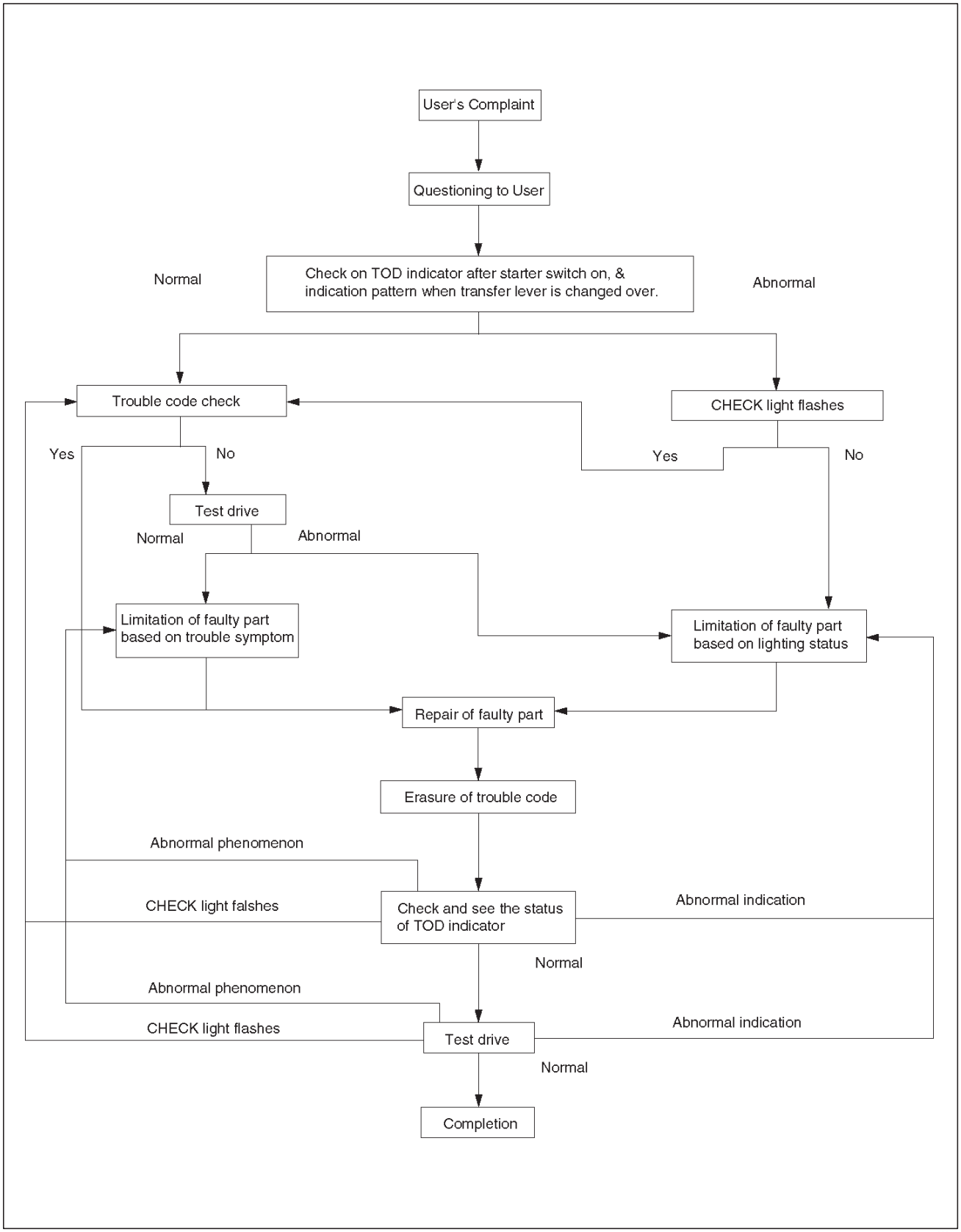

C07RW023–1

Downloaded from www.Manualslib.com manuals search engine

Parts Location

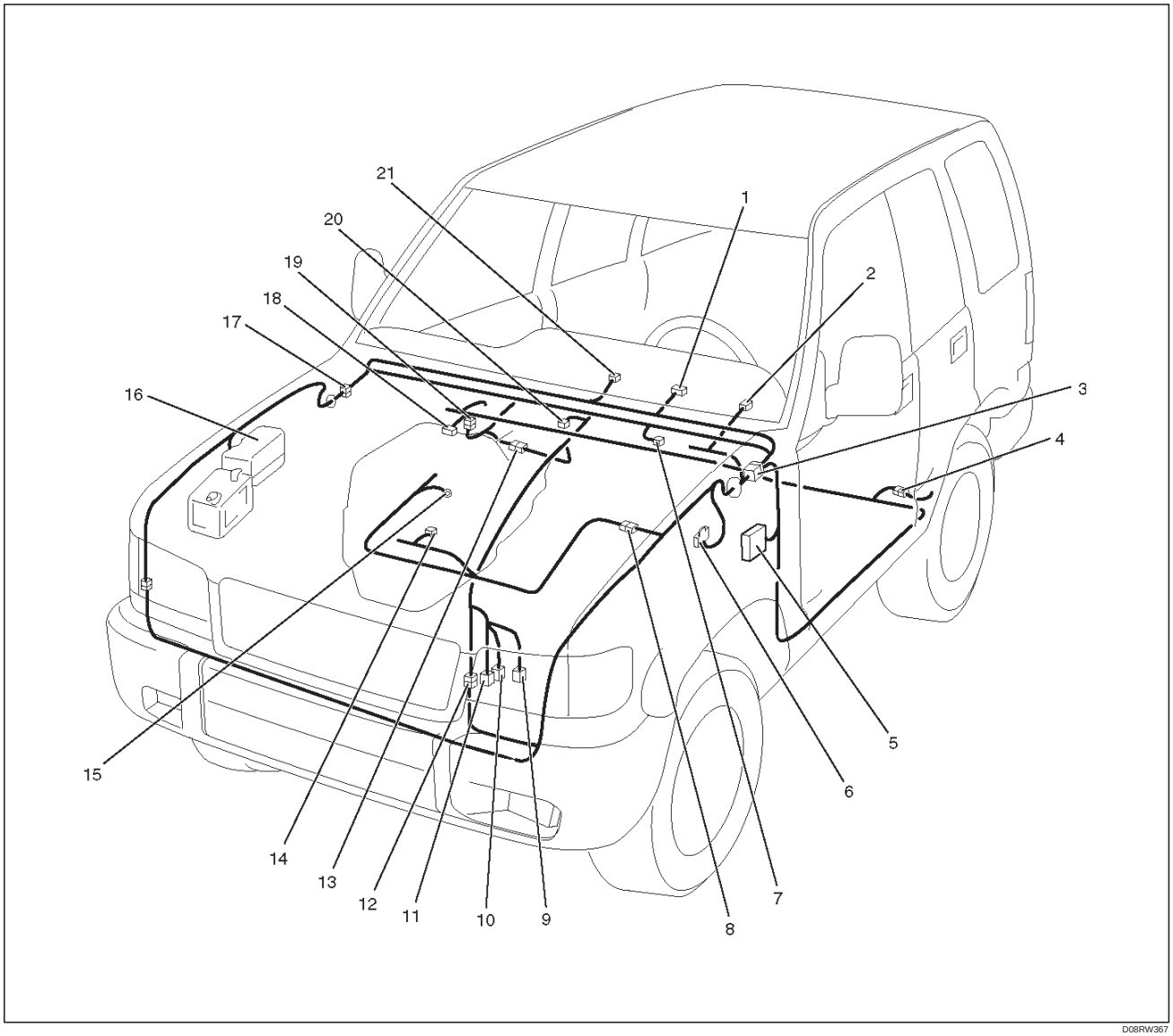

Legend

(1) I–9
(2) C–63
(3) H–7, H–8, H–25
(4) H–33
(5) Fuse Box
(6) C–16
(7) B–13
(8) H–55, H–57
(9) M–22
(10) M–23
(11) M–24
(12) H–10
(13) H–17
(14) E–54
(15) E–29
(16) Relay & Fuse Box
(17) H–12
(18) B–48, B–49
(19) H–33, H–36
(20) M–27
(21) I–12

Downloaded from www.Manualslib.com manuals search engine

Circuit Diagram

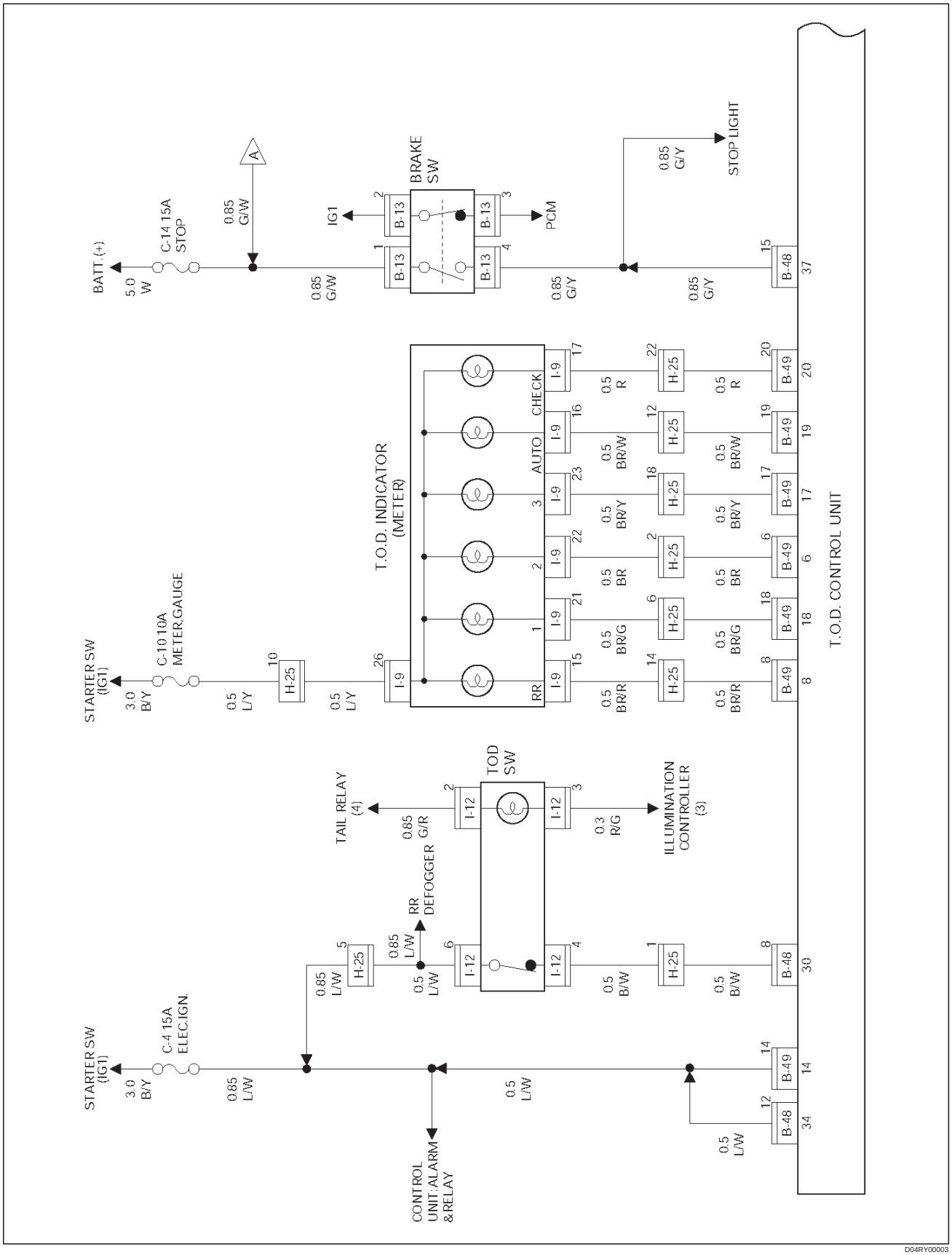

D04RY00003

Downloaded from www.Manualslib.com manuals search engine

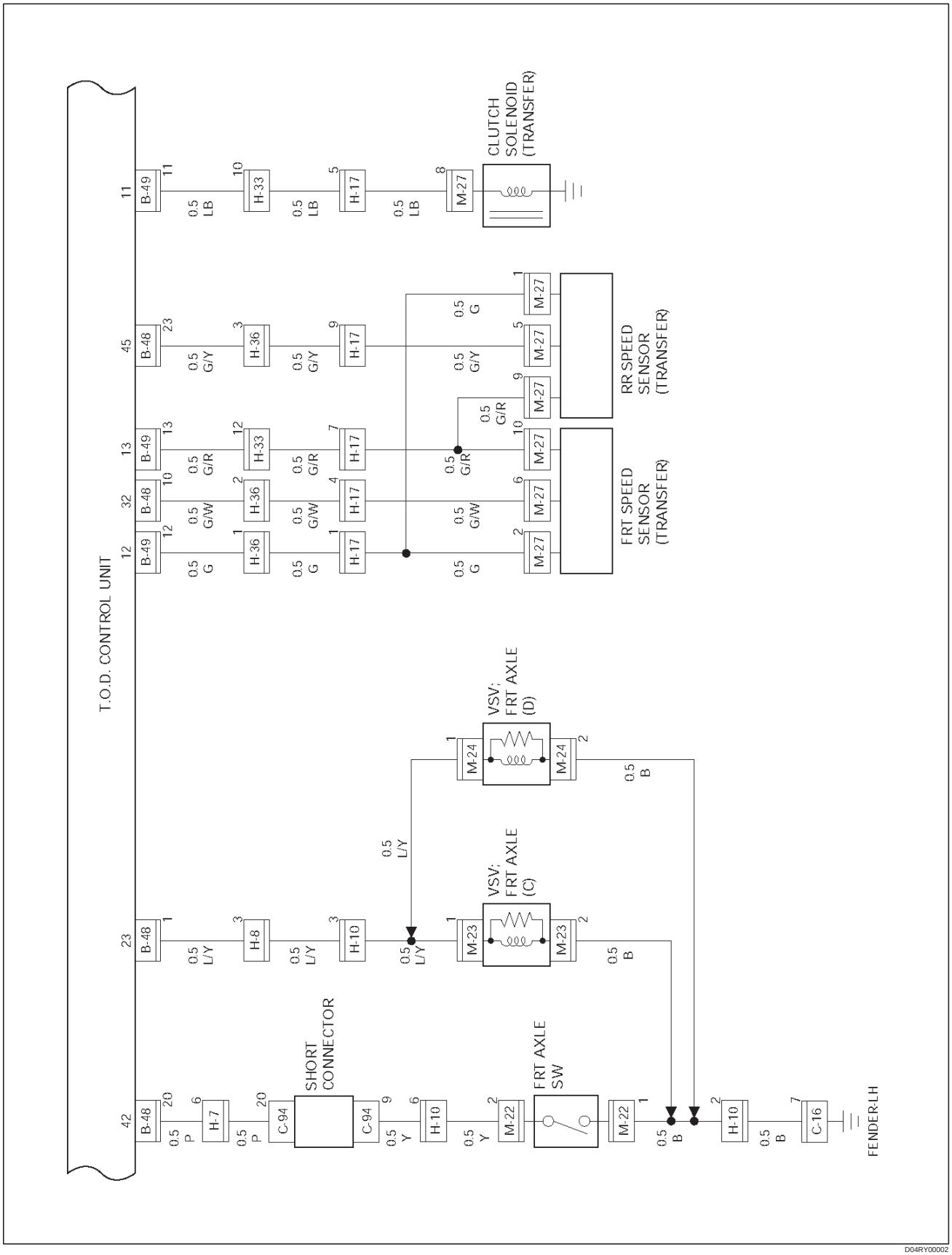

D04RY00002

Downloaded from www.Manualslib.com manuals search engine

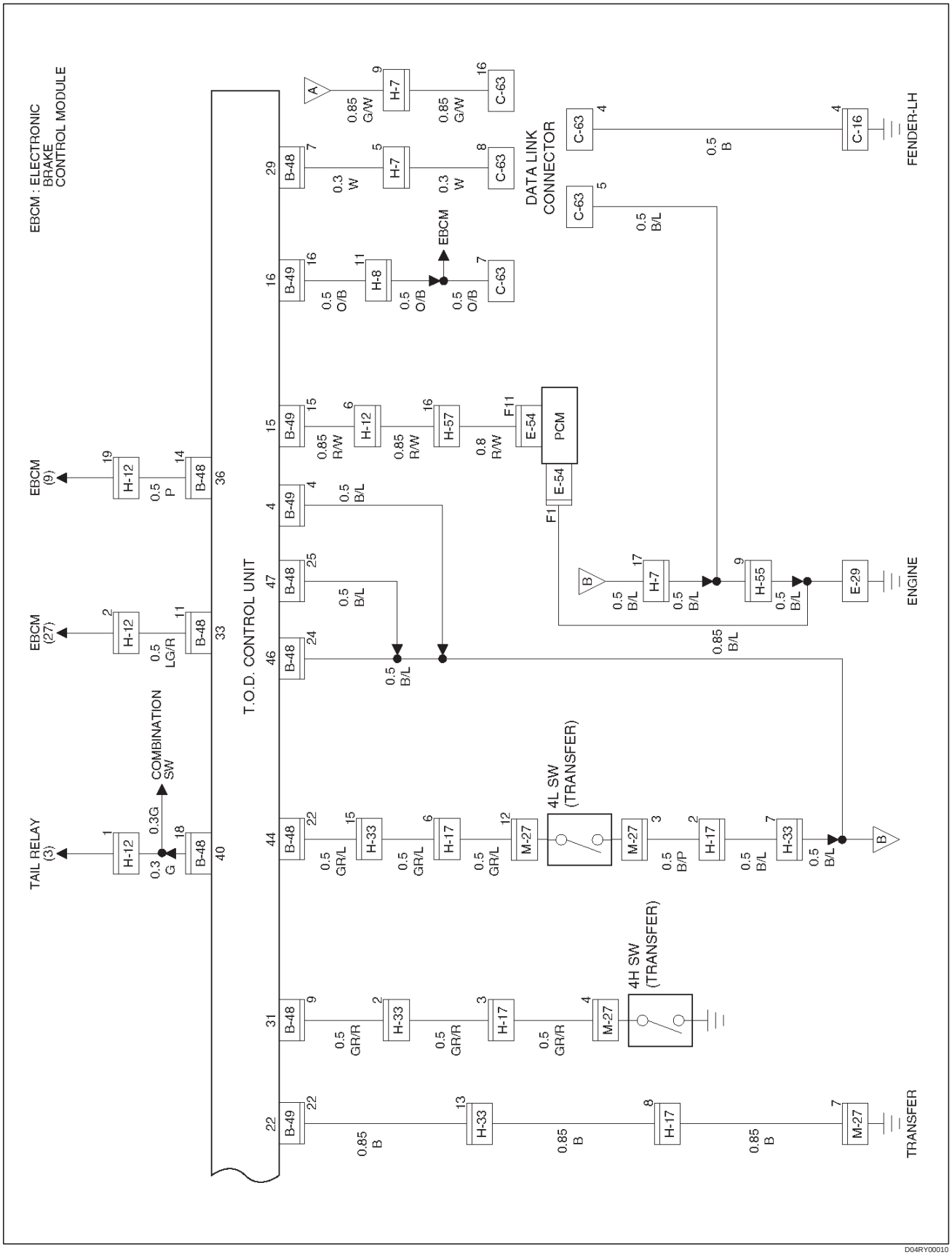

Downloaded from www.Manualslib.com manuals search engine

Connector List

No.	Connector face
B-13	
B-48	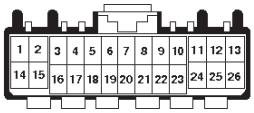
B-49	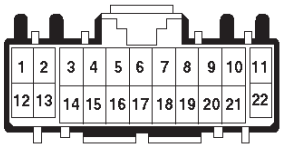
C-16	
C-63	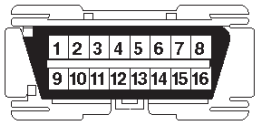
C-94	
E-29	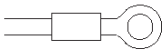
E-54	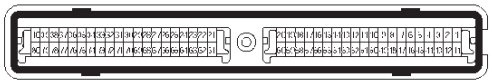
H-7	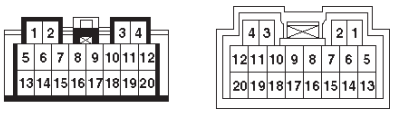

No.	Connector face
H-8	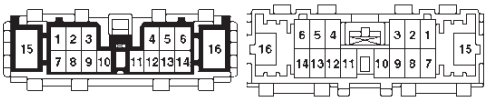
H-10	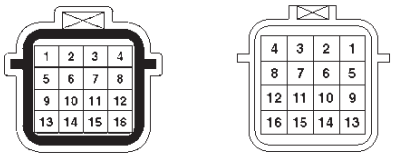
H-12	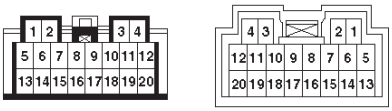
H-17	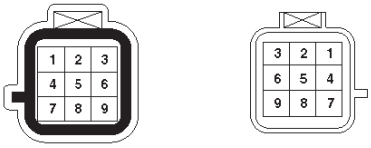
H-25	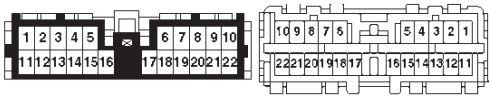
H-33	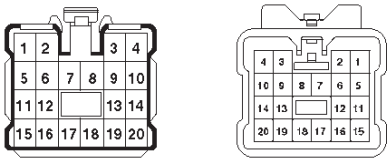
H-36	
H-55	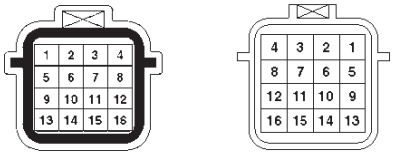
H-57	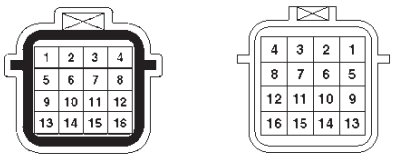

Downloaded from www.Manualslib.com manuals search engine

No.	Connector face
I-9	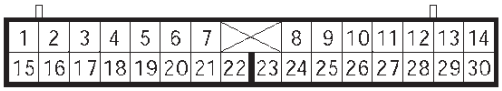
I-12	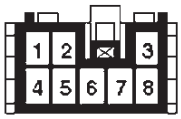
M-22	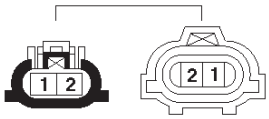
M-23	
M-24	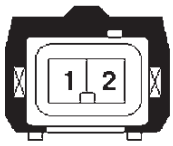
M-27	

Downloaded from www.Manualslib.com manuals search engine

Checking Failed Pin

Connector Pin Assignment

- ECU pin assignment

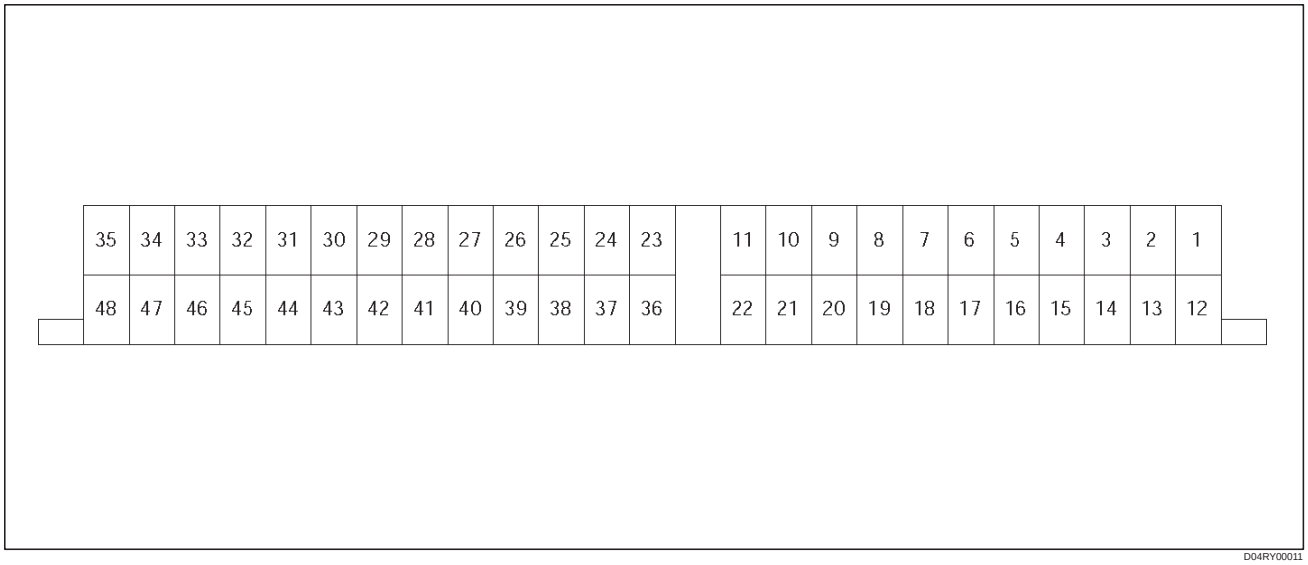

No.	NAME	CONTENTS
1	N.C	Not used
2	N.C	Not used
3	N.C	Not used
4	D–G MAP	Gas/Diesel
5	N.C	Not used
6	IND. b	Display Front–B
7	N.C	Not used
8	IND. Rr	Display Rear–E
9	N.C	Not used
10	N.C	Not used
11	SOL (+)	EMC
12	Ref	Speed Reference
13	COM (–)	Speed Return
14	VIG	Ignition
15	TPS	TPS (PWM)
16	TECH 2	TECH–2
17	IND. a	Display Front–A
18	IND. c	Display Front–C
19	IND. AUTO	Display Auto–D
20	CHECK	Check T/F
21	N.C	Not used
22	P–GND	Power Ground
23	ADC (+)	Axle Disconnect Output
24	N.C	Not used
25	N.C	Not used

Downloaded from www.Manualslib.com manuals search engine

No.	NAME	CONTENTS
26	N.C	Not used
27	N.C	Not used
28	N.C	Not used
29	DIAG	Diagnostic Input
30	TOD SW	TOD Switch
31	4H SW	4H Switch Input
32	Frt. Sig	Front Speed Signal
33	ABS IN	ABS In
34	VIG	Ignition
35	N.C	Not used
36	4WD OUT	4WD Signal Output
37	BRAKE	Brake Switch Input
38	N.C	Not used
39	N.C	Not used
40	LIGHTING SW	Lighting Switch Input
41	N.C	Not used
42	AXLE SW	Axle Switch Input
43	N.C	Not used
44	4L SW	4L Switch Input
45	Rr. Sig	Rear Speed Signal
46	GND	ECU Ground 1
47	GND. 2	ECU Ground 2
48	N.C	Not used

Downloaded from www.Manualslib.com manuals search engine

Reference

- Transfer connector pin assignment (connector on the transfer case)
  for inspection of transfer pins.

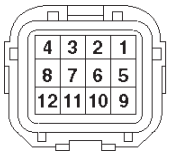

810RW310

No.	NAME	CONTENTS
1	Ref. (Rer.)	Rear speed sensor reference output
2	Ref. (Frt.)	Front speed sensor reference output
3	SW GND	SW GND
4	4H SW (+)	4H SW plus terminal
5	Rer. (+)	Rear speed sensor plus
6	Frt. (+)	Front speed sensor plus
7	POWER GND	Power GND
8	SOL (+)	Electromagnetic solenoid
9	COM (–) (Rer.)	Rear speed sensor GND
10	COM (–) (Frt.)	Front speed sensor GND
11	NC	Not used
12	4L SW (+)	4L SW plus terminal

Downloaded from www.Manualslib.com manuals search engine

Checking Failed TOD Control Unit Pin

NOTE:

1. Unplug the ECU connector and the pins, unless otherwise specified.
2. Before removing the ECU, turn off the ignition switch.
3. If the standard values are not observed, check the pins with other testers.

Check Pin No.	Circuit to be tested	Ignition Switch Position	Engine State	Multimeter Scale/ Range	Measure between Pin Number	Standard Valve	Note
4	D-G MAP	OFF	STOP	μ	4, 46	Continuity : OK	
22	P-GND	OFF	STOP	μ	22, 46	Continuity : OK	
46	GND	OFF	STOP	μ	46, GND	Continuity : OK	
31	4H SW	OFF	STOP	μ	31, 46	No continuity (high, 4L) and continuity (N) : OK	
44	4L SW	OFF	STOP	μ	44, 46	No continuity (high) and continuity (4L, N) : OK	
42	AXLE SW	ON	RUN	μ	42, 46	Continuity : OK	Remove ECU and start the engine. Move the vehicle forth and back to connect axle surely.
29	DIAG	OFF	STOP	μ	29 (TOD), 8 (DLC Connector)	Continuity : OK	DLC connector terminal 8
17	IND.a	ON	STOP	DCV	17 (+), 46 (–)	8.0 ~14.5 V	
6	IND.b	ON	STOP	DCV	6 (+), 46 (–)	8.0 ~14.5 V	
18	IND.c	ON	STOP	DCV	18 (+), 46 (–)	8.0 ~14.5 V	
20	CHECK LAMP	ON	STOP	DCV	20 (+), 46 (–)	8.0 ~14.5 V	
33	ABS IN	ON	STOP	DCV	33 (+), 46 (–)	11.5 ~14.5 V	
12	Ref.	ON	STOP	DCV	12 (+), 46 (–)	5 ~9 V	Connect ECU
32	Ft.(+)	ON	STOP	DCV	32 (+), 46 (–)	0.7 ~6 V	Connect ECU and move the vehicle (off one tooth of speed sensor ring) making sure of voltage change.
45	Rr.(+)	ON	STOP	DCV	45 (+), 46 (–)	0.7 ~6 V	Connect ECU and move the vehicle (off one tooth of speed sensor ring) making sure of voltage change.
13	COM(-)	ON	STOP	DCV	13 (+), 46 (–)	0V	Connect ECU
14	Vig	ON	STOP	DCV	14 (+), 46 (–)	8 ~14.5 V	
37	BRAKE	OFF	STOP	DCV	37 (+), 46 (–)	8 ~14.5 V	Press brake pedal
15	TPS	ON	STOP	DCV	15 (+), 46 (–)	PWM duty cycle 10% – 90%	Step on the accelerator pedal and make sure that duty cycle changes.
36	4WD OUT	OFF	STOP	μ	36, 46	7 ~12 kμ	Disconnect battery GND terminal
23	ADC(+)	OFF	STOP	μ	23, 46	10 ~30 μ	Disconnect battery GND terminal
11	SOL(+)	OFF	STOP	μ	11, 46	1.0 ~5.0 μ	Disconnect battery GND terminal
30	TOD SW	ON	STOP	DCV	30 (+), 46 (–)	SW OFF : 8.0 ~14.5 V SW ON : 0 V	SW OFF : Contact point open SW ON : Contact point close
40	LIGHTING	ON	STOP	DCV	40 (+), 46 (–)	SW OFF : 8.0 ~14.5 V SW ON : 0 V	
19	AUTO INDI	ON	STOP	DCV	19 (+), 46 (–)	TOD : 0 V 2H : 8.0 ~14.5 V	
8	RR INDI	ON	STOP	DCV	8 (+), 46 (–)	0 V	
34	VIG	ON	STOP	DCV	34 (+), 46 (–)	8 ~14.5 V	

Downloaded from www.Manualslib.com manuals search engine

Tech 2 Scan Tool

From 98 MY, Isuzu dealer service departments are recommended to use Tech 2. Please refer to Tech 2 scan tool user guide.

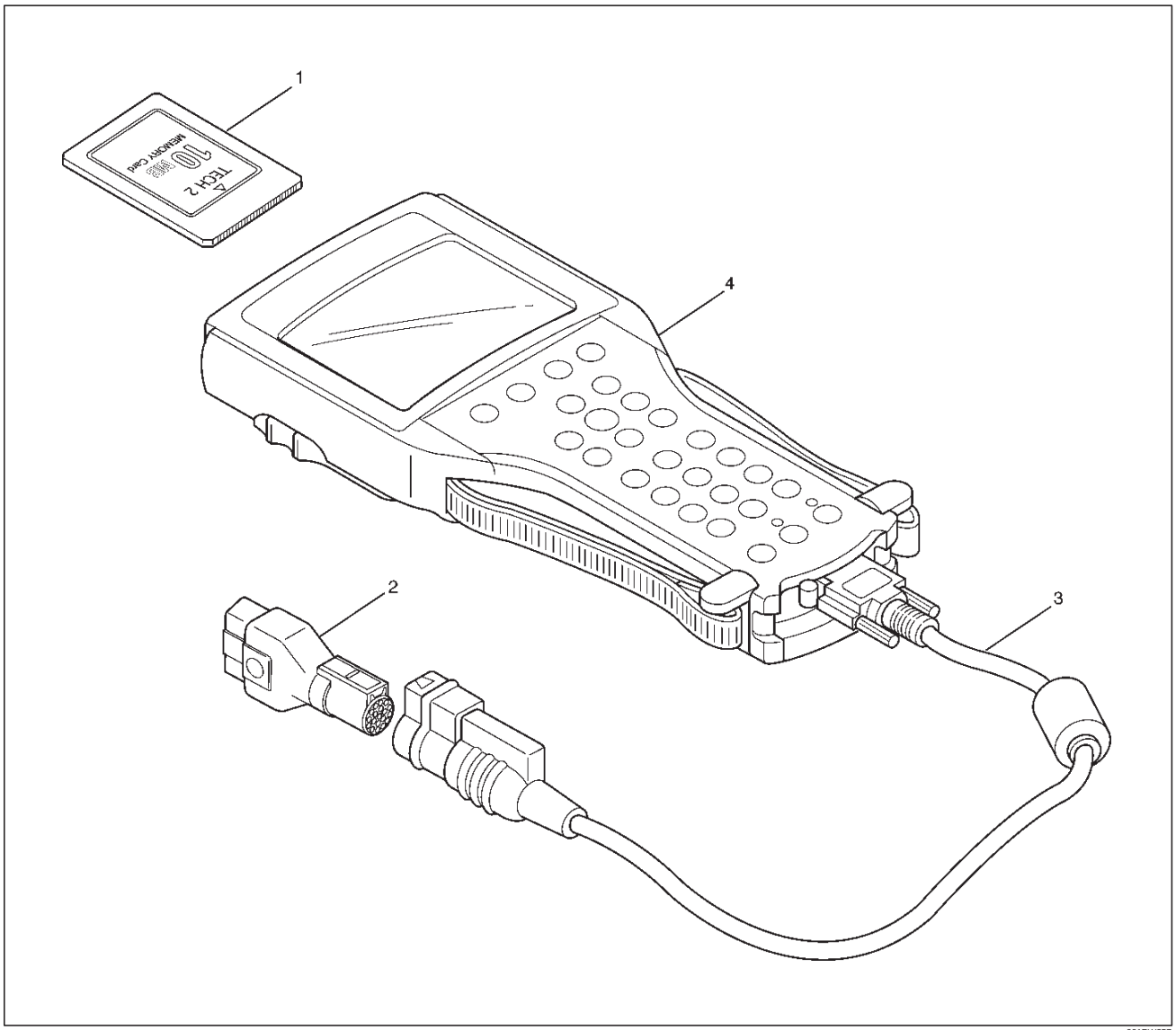

901RW257

Legend

(1) PCMCIA Card
(2) SAE 16/19 Adaptor
(3) DLC Cable
(4) Tech 2

Downloaded from www.Manualslib.com manuals search engine

Getting Started

- Before operating the Isuzu PCMCIA card with the Tech 2, the following steps must be performed:

1. The Isuzu 98 System PCMCIA card (1) inserts into the Tech 2 (4).
2. Connect the SAE 16/19 adapter (2) to the DLC cable (4).
3. Connect the DLC cable to the Tech 2 (4)
4. Mark sure the vehicle ignition is off.
5. Connect the Tech 2 SAE 16/19 adapter to the vehicle DLC connector.

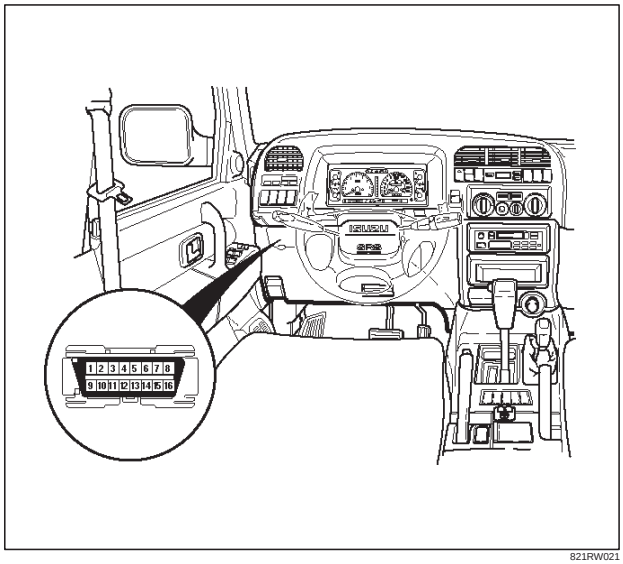

821RW021

6. The vehicle ignition turns on.
7. Power up the Tech 2.
8. Verify the Tech 2 power up display.

060RW009

Operating Procedure

The power up screen is displayed when you power up the tester with the Isuzu systems PCMCIA card. Follow the operating procedure below.

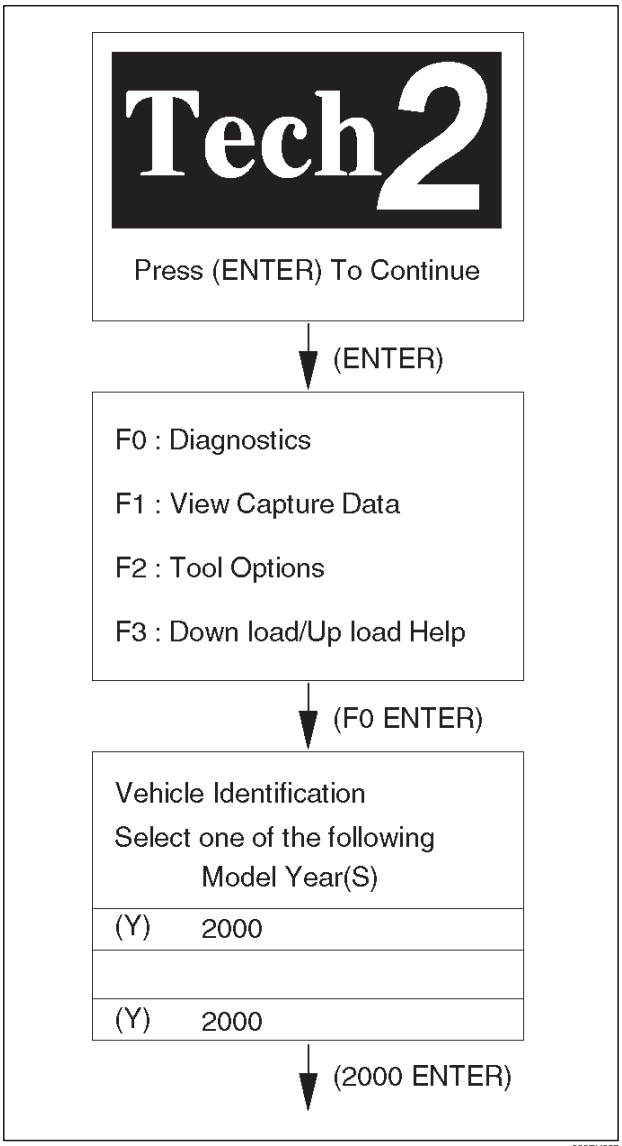

060RY027

Downloaded from www.Manualslib.com manuals search engine

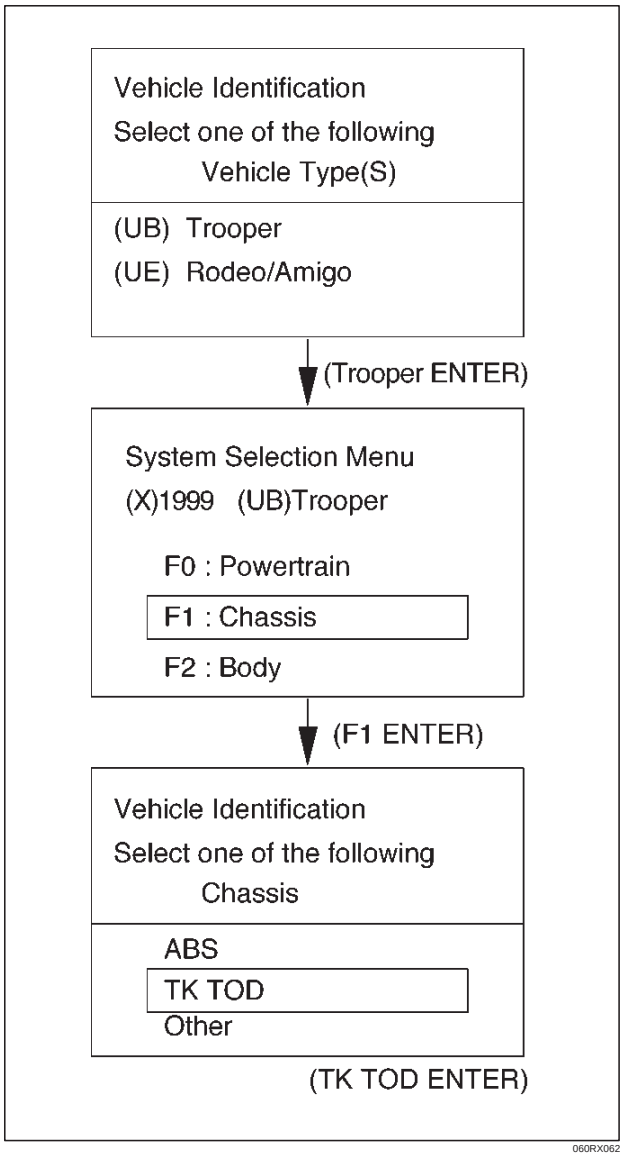

Downloaded from www.Manualslib.com manuals search engine

Diagnostic Trouble Codes

Code	Item	Diagnosis	Check flow No.
12	Start code	Normal	—
13	Ref	Shorted GND	6
14	Front speed sensor	Input abnormality (open, sig or com)	2
15	Ref	Shorted V_B	6
16	Front speed sensor	Input abnormality	3
21	TPS	Shorted or disconnected wiring, abnormality in input	7
23	ECU	CPU abnormality	1
24	Rear speed sensor	Input abnormality (open, sig or com)	5
26	EMC (+)	Shorted GND	10
27	Rear speed sensor	Input abnormality	4
28	ADC (+) & AXLE SW	Output abnormality	11
31	EMC (+)	Shorted or disconnected coil/wiring	9
32	ADC (+)	Shorted or disconnected coil/wiring	12
33	ADC (+)	Shorted GND	13
36	ECU	CPU abnormality	1
37	ECU	CPU abnormality	1
38	ECU	CPU abnormality	1

TPS : Throttle Position Sensor
EMC : Electromagnetic coil
ADC : Shift on the fly (Axle Dis Connect)

Downloaded from www.Manualslib.com manuals search engine

Diagnosis from Trouble Codes

- Diagnose the based on the fault that have been saved to the control unit according to the system self-diagnostic function.

Check flow	Trouble code	Phenomenon	Standard
1	23, 36, 37, 38	The ECU is failed.	—

Step	Action	Yes	No
1	Turn on the starter switch. Is the trouble reproduced?	Replace the ECU and conduct the test run. Go to Step 3	Go to Step 2
2	1. Clear the trouble codes. 2. Conduct the test run. Is the trouble reproduced during the test run?	Replace the ECU and conduct the test run. Go to Step 3	The trouble is not reproduced. Refer to “Troubles intermittently observed”. Go to Step 3
3	1. Check that all the parts are mounted. 2. Clear the trouble codes. Is this step complete?	Repeat the “Diagnosis Flow”.	Return to Step 3

Downloaded from www.Manualslib.com manuals search engine

Check flow	Trouble code	Phenomenon	Standard
2	14	Front speed sensor signal open or GND short, speed sensor com open.	0.3 < sensor voltage

NOTE: The following procedure shows the case that the front or rear sensor common grounding line is broken.

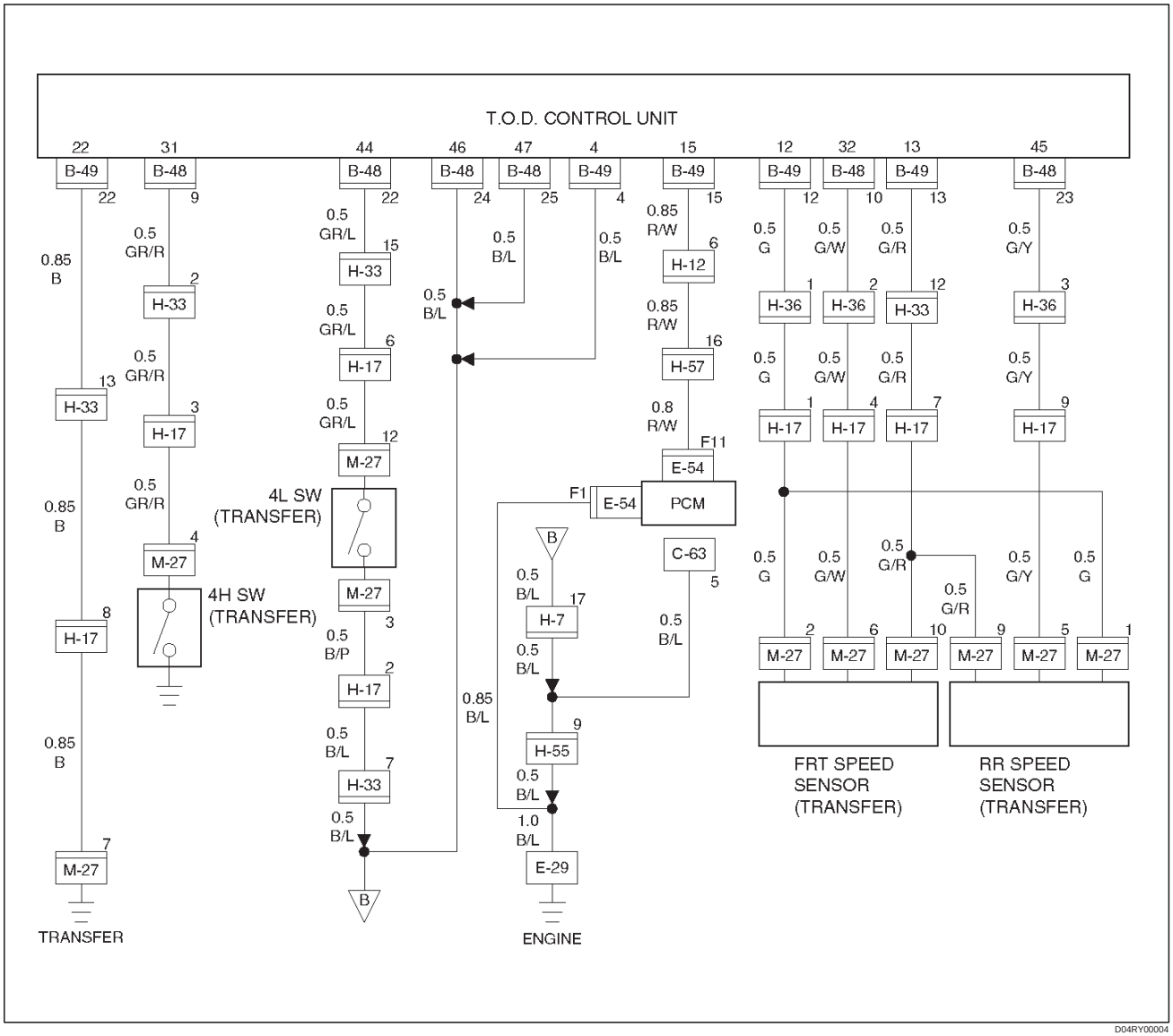

Downloaded from www.Manualslib.com manuals search engine

Step	Action	Yes	No
1	1. Start the engine. 2. Select 4H (TOD) mode. Is the memory except DTC 14?	Go to Step 3	Go to Step 2
2	Is the continuity between harness of terminal 32 and ground (vehicle side terminal of the front speed sensor)?	Replace speed sensor. Go to Step 6	Repair the circuit. Go to Step 6
3	Is the memory DTC 24?	Go to Step 4	Refer to other trouble check flow. Go to Step 2
4	Is the continuity between harness of terminal 32 and 45 (vehicle side terminal of the front and rear speed sensor)?	Go to Step 5	Repair the circuit. Go to Step 6
5	Is the continuity between harness of terminal 12 and 13 (vehicle side terminal of the speed sensor COM and ref)?	Replace front and rear speed sensor. Go to Step 6	Repair the circuit. Go to Step 6
6	1. Check that all the parts are mounted. 2. Clear the trouble code. Is the step complete?	Repeat the “Diagnosis Flow”.	The trouble is not reproduced. Refer to “Troubles intermittently observed”. Return to Step 6

Downloaded from www.Manualslib.com manuals search engine

Check flow	Trouble code	Phenomenon	Standard
3	16	The front speed sensor no pulse.	Hi level : 4.5 ~ 6.0 V Lo level : 0.7 ~ 2.0 V Frequency (F) = 766 Hz (at 30 mile/h)

NOTE: Find the trouble in which the pulse corresponding to the running speed is not input.

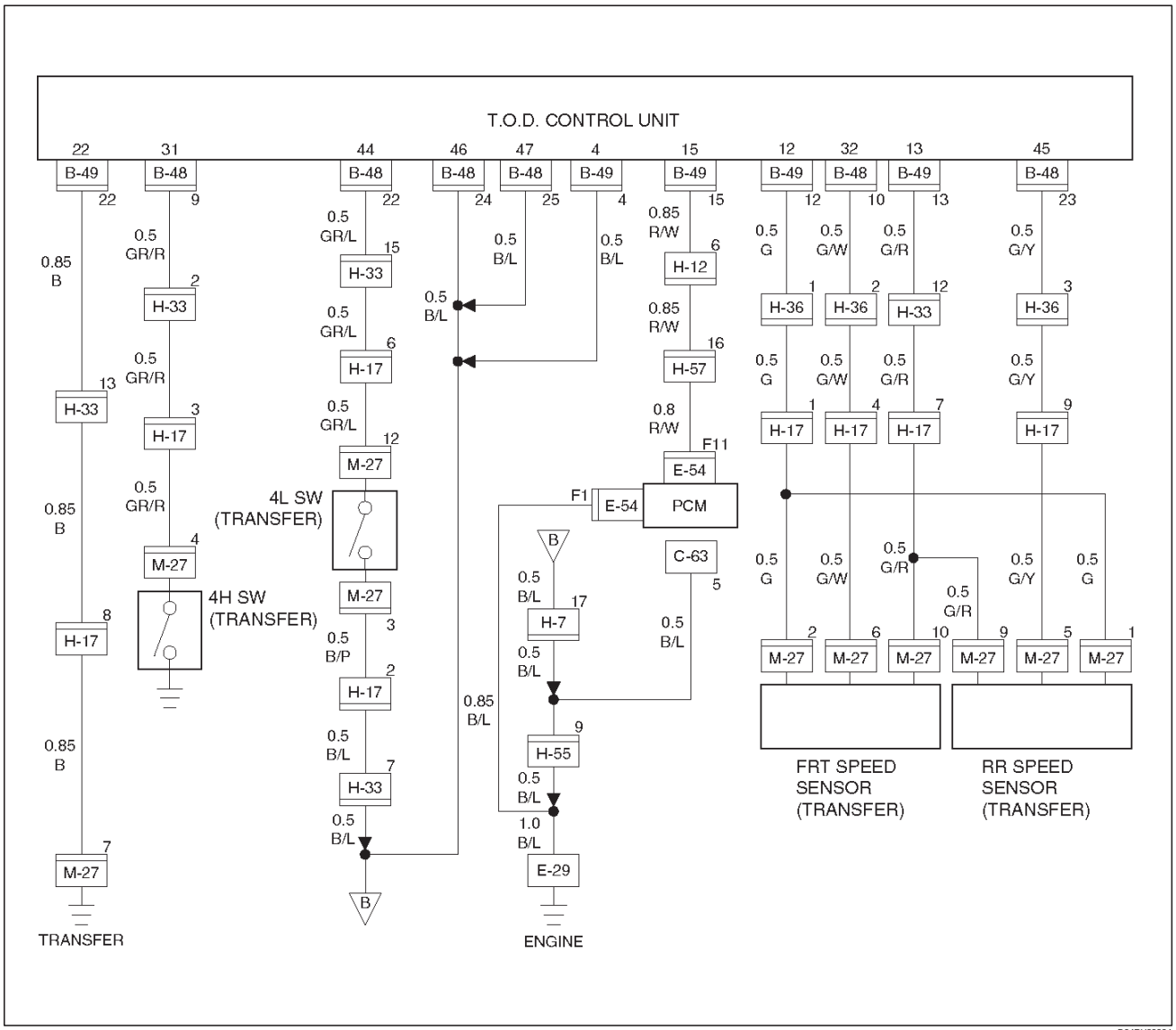

Downloaded from www.Manualslib.com manuals search engine

Step	Action	Yes	No
1	1. Connect TECH 2. While running in TOD mode, does TECH–2's front speed sensor indication change with vehicle speed?	Go to Step 2	Repair and inspection front speed sensor tone wheel. Go to Step 4
2	Is the continuity between harness of terminal 32 and ground (vehicle side terminal of the front speed sensor)?	Replace speed sensor. Go to Step 3	Repair the circuit. Go to Step 3
3	1. Clear the trouble code. While running at 30 mph in TOD mode for 30 consecutive sec, is trouble code reissued?	Replace ECU. Go to Step 4	Go to Step 4
4	1. Check that all the parts are mounted. 2. Clear the trouble code. Is this step complete?	Repeat the "Diagnosis Flow".	The trouble is not reproduced. Refer to "Troubles intermittently observed". Return to Step 4

Downloaded from www.Manualslib.com manuals search engine

Check flow	Trouble code	Phenomenon	Standard
4	27	The front speed sensor no pulse.	Hi level : 4.5 ~ 6.0 V Lo level : 0.7 ~ 2.0 V Frequency (F) = 766 Hz (at 30 mile/h)

NOTE: Find the trouble in which the pulse corresponding to the running speed is not input.

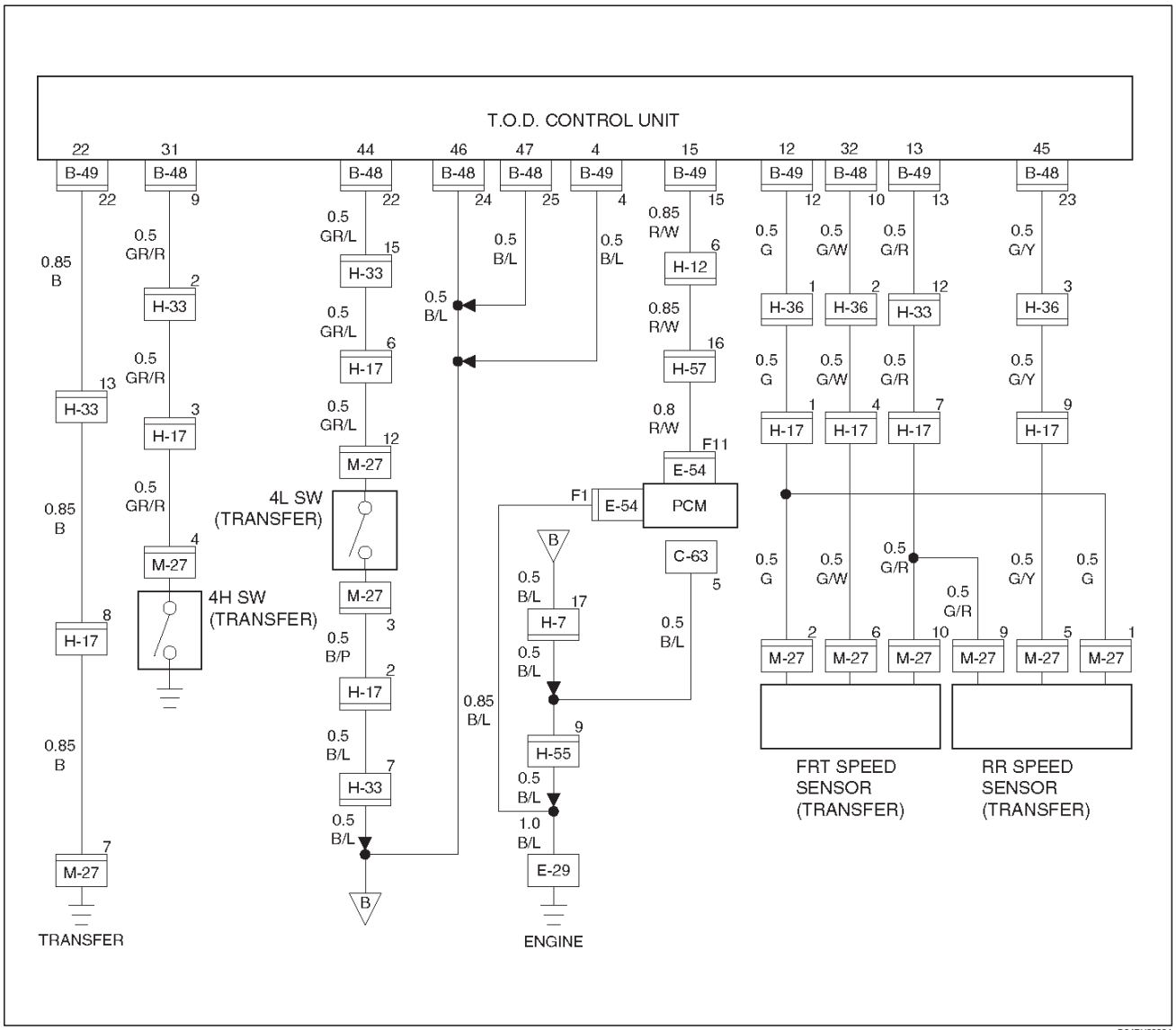

Downloaded from www.Manualslib.com manuals search engine

Step	Action	Yes	No
1	1. Connect TECH 2. While running in TOD mode, does TECH–2's front speed sensor indication change with vehicle speed?	Go to Step 2	Repair and inspection front speed sensor tone wheel. Go to Step 4
2	Is the continuity between harness of terminal 45 and ground (vehicle side terminal of the rear speed sensor)?	Replace speed sensor. Go to Step 3	Repair the circuit. Go to Step 3
3	1. Clear the trouble code. While running at 30 mph in TOD mode for 30 consecutive sec, is trouble code reissued?	Replace EUC. Go to Step 4	Go to Step 4
4	1. Check that all the parts are mounted. 2. Clear the trouble code. Is this step complete?	Repeat the "Diagnosis Flow".	The trouble is not reproduced. Refer to "Troubles intermittently observed". Return to Step 4

Downloaded from www.Manualslib.com manuals search engine

Check flow	Trouble code	Phenomenon	Standard
5	24	Rear speed sensor signal open or GND short, speed sensor COM open.	0.3 V < sensor voltage

NOTE: The following procedure shows the case that the front or rear sensor common grounding line is broken.

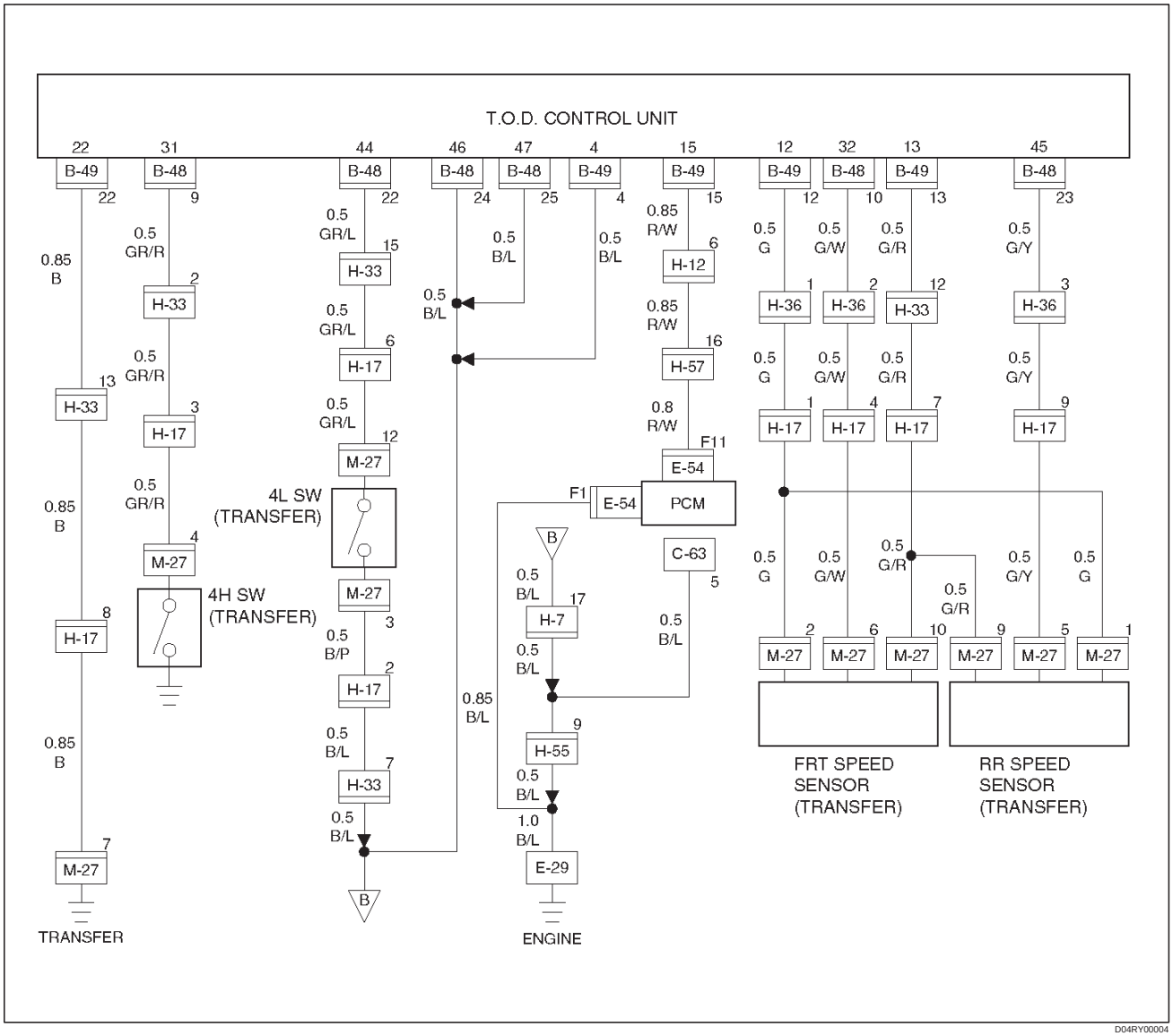

Downloaded from www.Manualslib.com manuals search engine

Step	Action	Yes	No
1	1. Start the engine. 2. Select 4H (TOD) mode. Is the memory except DTC 24?	Go to Step 3	Go to Step 2
2	Is the continuity between harness of terminal 45 and ground (vehicle side terminal of the rear speed sensor)?	Replace speed sensor. Go to Step 6	Repair the circuit. Go to Step 6
3	Is the memory DTC 14?	Go to Step 4	Refer to other trouble cheek flow. Go to Step 2
4	Is the continuity between harness of terminal 32 and 45 (vehicle side terminal of the front and rear speed sensor)?	Go to Step 5	Repair the circuit Go to Step 6
5	Is the continuity between harness of terminal 12 and 13 (vehicle side terminal of the speed sensor COM and ref)?	Replace front and rear speed sensor. Go to Step 6	Repair the circuit. Go to Step 6
6	1. Check that all the parts are mounted. 2. Clear the trouble code. Is the step complete?	Repeat the “Diagnosis Flow”.	The trouble is not reproduced. Refer to “Troubles intermittently observed”. Return to Step 6

Downloaded from www.Manualslib.com manuals search engine

Check flow	Trouble code	Phenomenon	Standard
6	13	The reference is short-circuited to GND.	Reference ≃ 5 V
	15	The reference Vb is short-circuited.	

If the reference wire (15) is short-circuited to GND, the speed signal is not generated. If the wire is short-circuited to the battery voltage, the signal level becomes faulty.

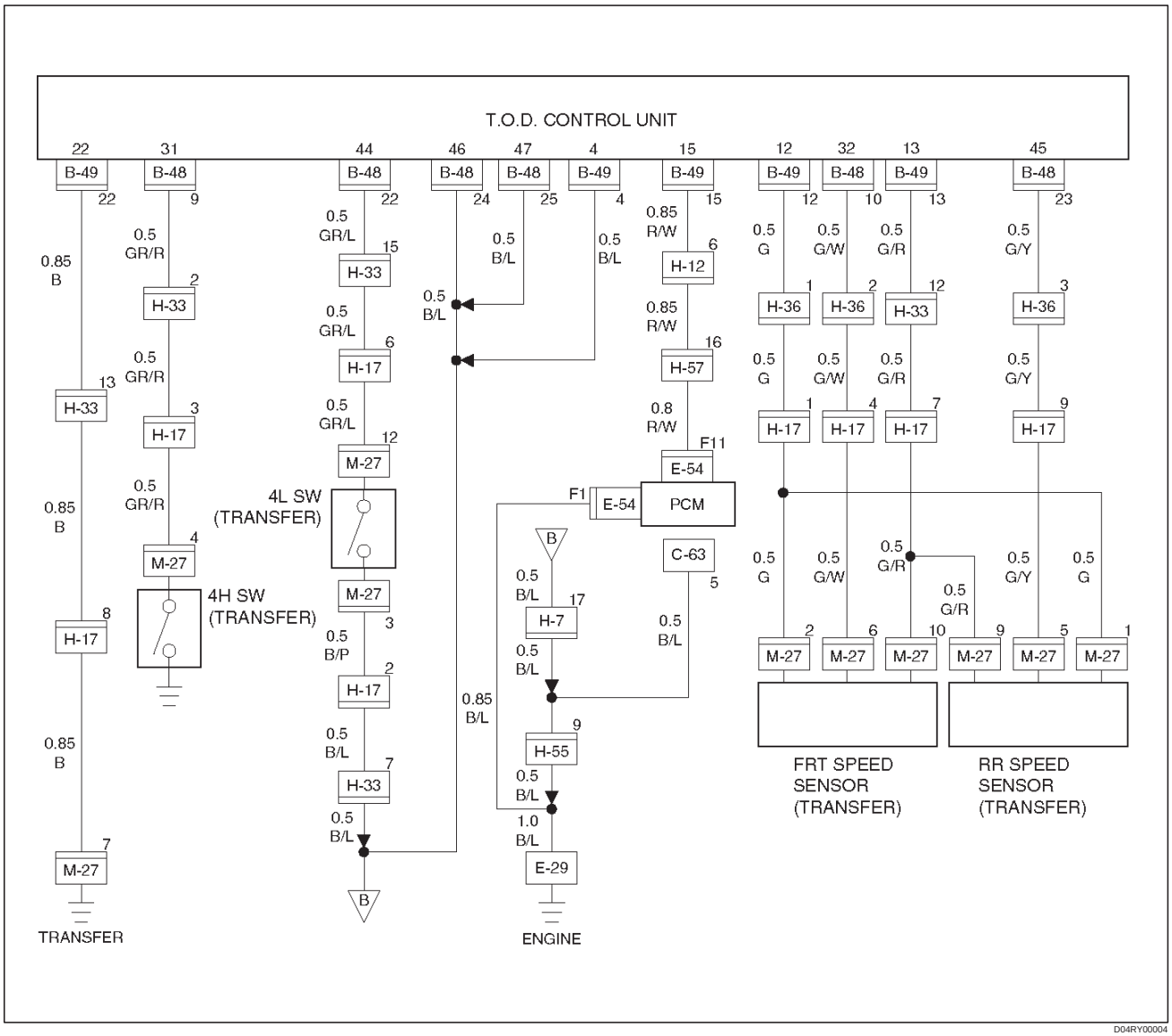

Downloaded from www.Manualslib.com manuals search engine

Step	Action	Yes	No
1	1. Start the engine. Does the voltage between terminals 12 and 13 meet the standard 5V?	Go to Step 8	Go to Step 2
2	Is the voltage below the standard?	Go to Step 3	Go to Step 7
3	1. Turn off the starter switch. 2. Disconnect the ECU connector. Is the continuity established between vehicle harness terminals (B–49)12 and (B–48)24?	Go to Step 4	The ECU is failed. Replace the ECU. Go to Step 8
4	1. Disconnect the H-17 connector. Is the continuity established between floor harness connector terminals (H-17)1 and (H-17)8?	Go to Step 5	Go to Step 6
5	1. Disconnect the M-27 connector. Is the continuity established between transfer harness connector terminals (M–27)2 and (M–27)7?	Replace the front speed sensor. Go to Step 8	The reference harness for the front speed sensor is short–circuited to GND. Repair the circuit. Go to Step 8
6	1. Disconnect the M-27 connector. Is the continuity established between transfer harness connector terminals (M–27)1 and (M–27)7?	Replace the rear speed sensor. Go to Step 8	The reference harness for the front speed sensor is short–circuited to GND. Repair the circuit. Go to Step 8
7	1. Turn off the starter switch. 2. Disconnect the ECU connector. 3. Turn on the starter switch. Is the battery voltage observed between harness connector terminals (B–49)12 and (B–48)24?	Repair the harness circuit. Go to Step 8	The ECU has failed. Replace the ECU. Go to Step 8
8	1. Check that all the parts are mounted. 2. Clear the trouble code. Is this step complete?	Repeat the “Diagnosis Flow”	Go to Step 8

Downloaded from www.Manualslib.com manuals search engine

Check flow	Trouble code	Phenomenon	Standard
7	21	The voltage of the throttle position sensor (TPS) is faulty.	See below table.

NOTE: The signal voltage from the TPS deviates from the standard range.

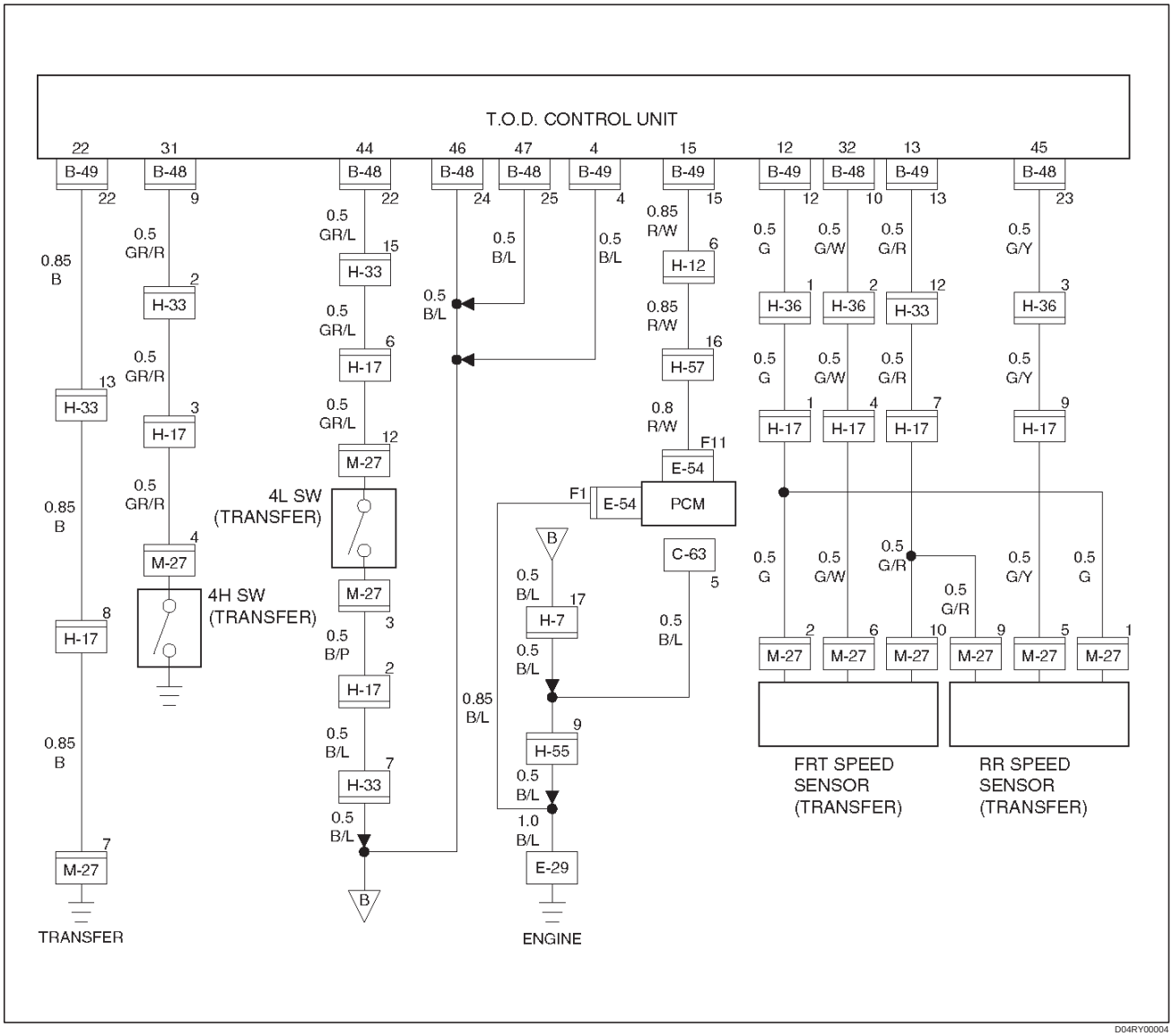

Downloaded from www.Manualslib.com manuals search engine

Oscilloscope Waveform

PWM 0-12V	Duty Cycle
1. Minimum Throttle	90%
2. Maximum Throttle	10%
3. TPS PWM FAULT	Less than 2% More than 98%

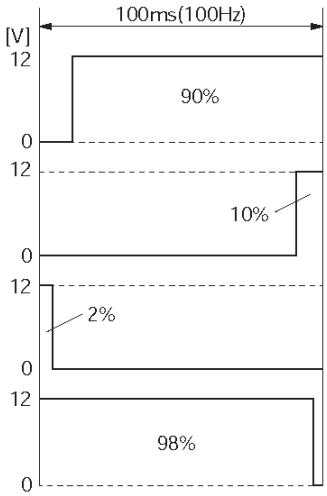

D04RY00012

Downloaded from www.Manualslib.com manuals search engine

Step	Action	Yes	No
1	1. Turn off the starter switch. Is the battery voltage normal?	Go to Step 2	Charge or replace the battery. Go to Step 6
2	1. Turn on the starter switch. Does the voltage between terminals 15 and 46 fall within the standard range above?	Go to Step 6	Go to Step 3
3	1. Turn off the starter switch. 2. Disconnect the ECU connector. 3. Turn on the starter switch. Does the voltage between terminals (B–49)15 and (B–48)24 fall within the standard range above?	The ECU has failed. Replace the ECU. Go to Step 6	Go to Step 4
4	Is the harness healthy?	Go to Step 5	Repair the harness. Go to Step 6
5	Is the TPS healthy?	Go to Step 6	Replace the TPS. Go to Step 6
6	1. Check that all the parts are mounted. 2. Clear the trouble code. Is this step complete?	Repeat the “Diagnosis Flow”.	Go to Step 6

Downloaded from www.Manualslib.com manuals search engine

Check flow	Trouble code	Phenomenon	Standard
9	31	The electromagnetic coil is broken.	—

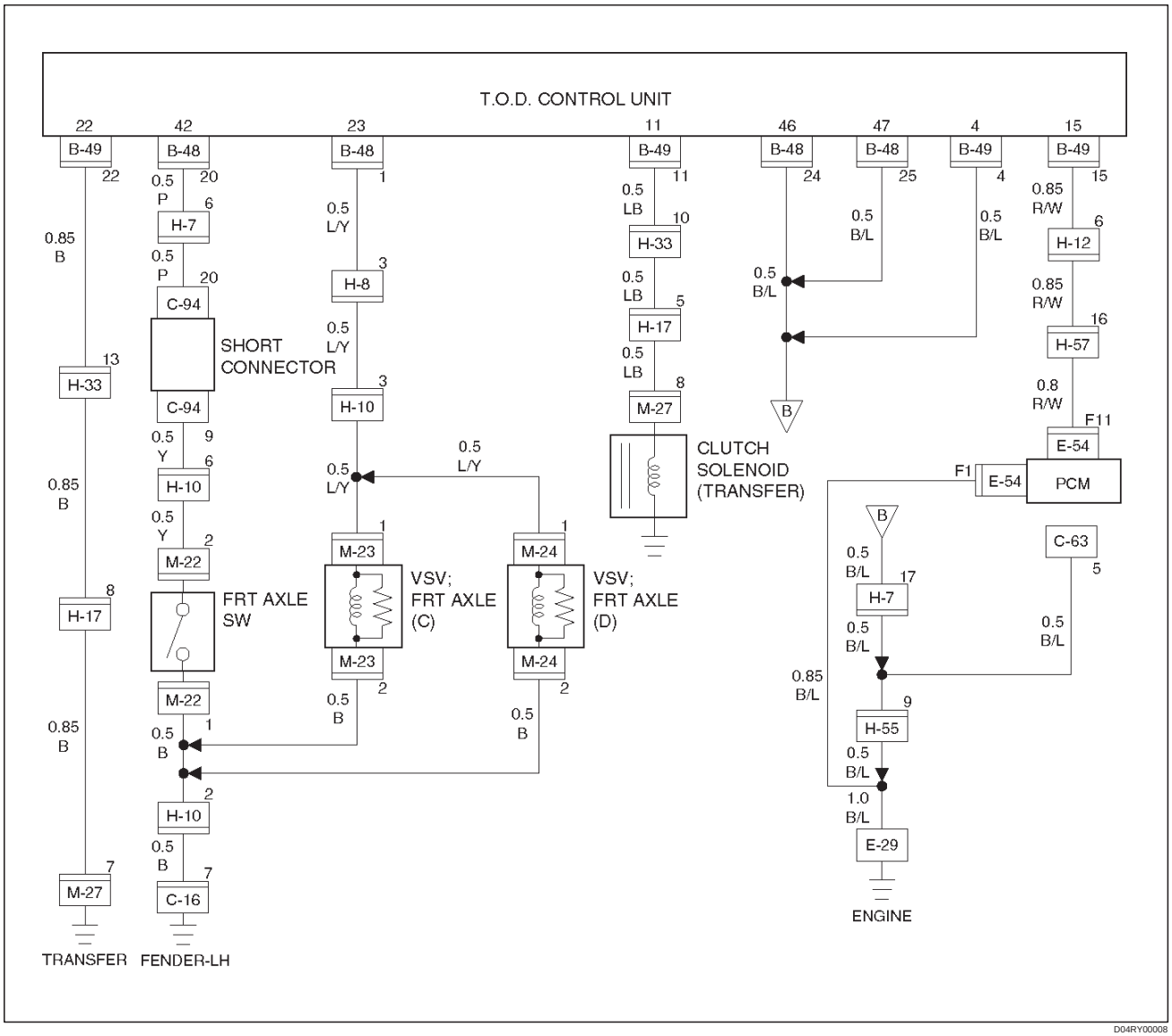

Downloaded from www.Manualslib.com manuals search engine

Step	Action	Yes	No
1	1. Turn off the starter switch. 2. Disconnect the ECU connector from ECU. Is the continuity established between terminals (B–49)11 and (B–49)22?	Go to Step 2	Go to Step 4
2	1. Connect the ECU connector. 2. Start the engine. 3. Set the TOD mode. Does the voltage between terminals 11 and 22 indicate at least 0.4V?	Go to Step 3	The ECU has failed. Replace the ECU. Go to Step 5
3	Is the battery voltage always observed between terminals 11 and 22?	The harness is short–circuited on the battery. Repair the circuit. Go to Step 5	The phenomenon is not reproduced. Refer to “Troubles intermittently observed”. Go to Step 4
4	1. Disconnect the M–27 connector. Is the continuity established between transfer connector terminals (M–27)8 and (M–27)7?	The harness is broken. Repair the circuit. Go to Step 5	Replace the transfer electromagnetic coil (solenoid clutch). Go to Step 5
5	1. Check that all the parts are mounted. 2. Clear the trouble code. Is this step complete?	Repeat the “Diagnosis Flow”.	Return to Step 5

Downloaded from www.Manualslib.com manuals search engine

Check flow	Trouble code	Phenomenon	Standard
10	26	The electromagnetic coil GND is short-circuited.	Resistance: 1.0 to 5.0 ohm (at ordinary temperature)

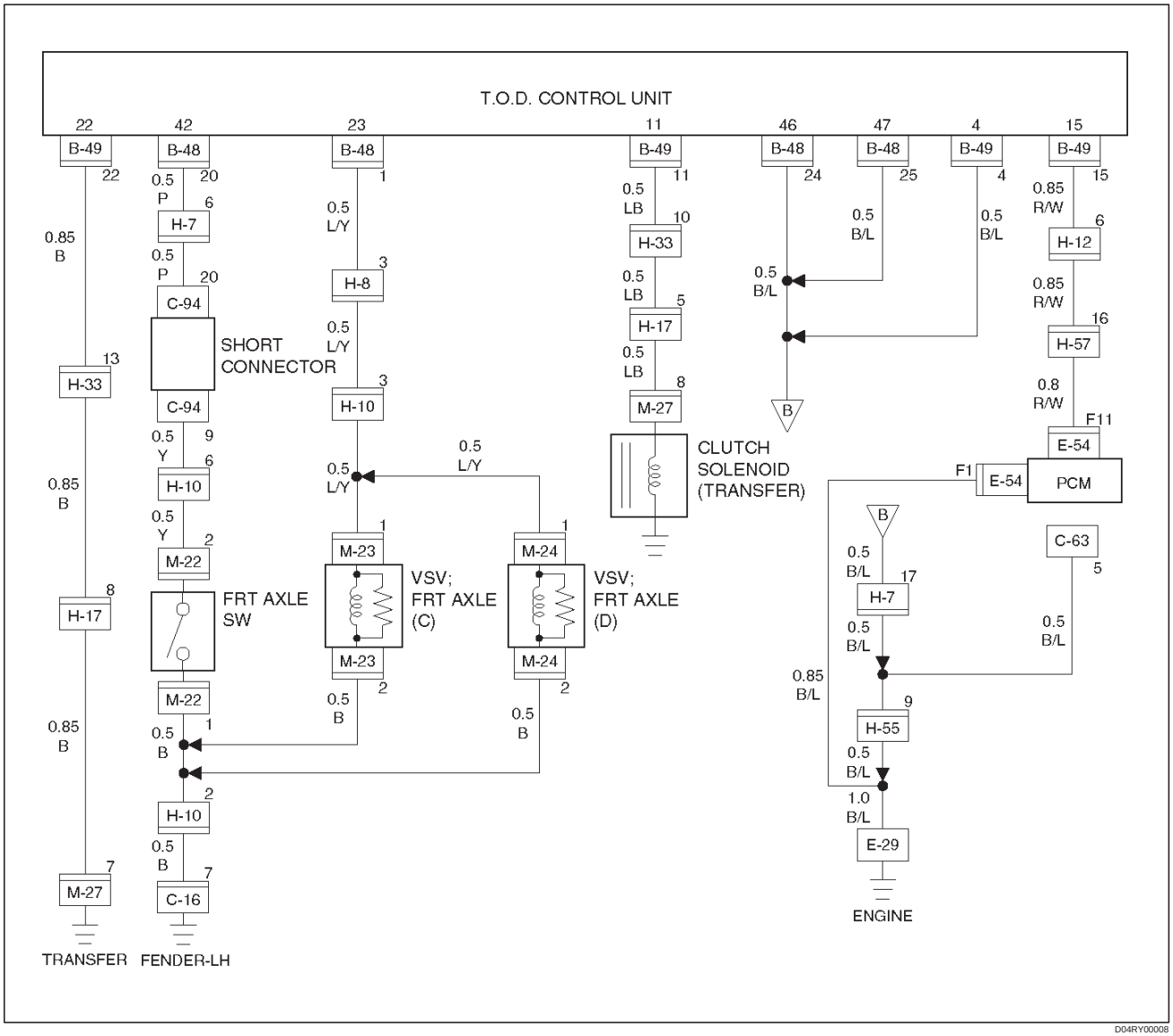

Downloaded from www.Manualslib.com manuals search engine

Step	Action	Yes	No
1	1. Turn off the starter switch. 2. Disconnect the ECU connector from ECU. Does the resistance between terminals (B–49)11 and (B–49)22 indicate 1.0 to 5.0 ohm?	Go to Step 2	Go to Step 3
2	1. Connect the ECU connector. 2. Start the engine. 3. Set the TOD mode. When the throttle is operated between full close and full open positions, does the voltage between terminals 11 and 22 indicate at least 0.1 to 1.0 V?	The phenomenon is not reproduced. Refer to “Troubles intermittently observed”. Go to Step 4	The ECU has failed. Replace the ECU. Go to Step 4
3	Does the resistance between transfer connector terminals (M–27)8 and (M–27)7 indicate 1.0 to 5.0ohm?	The harness is broken. Repair the circuit. Go to Step 4	Replace the transfer electromagnetic coil. Go to Step 4
4	1. Check that all the parts are mounted. 2. Clear the trouble code. Is this step complete?	Repeat the “Diagnosis Flow”.	Return to Step 4

Downloaded from www.Manualslib.com manuals search engine

Check flow	Trouble code	Phenomenon	Standard
11	28	The shift on the fly system (front hub) works incorrectly.	—

NOTE: The shift on the fly system is not changed between 2WD and 4WD modes normally.

CAUTION: If code 32 or 33 is also observed, remove the trouble associated with code 32 or 33 first.

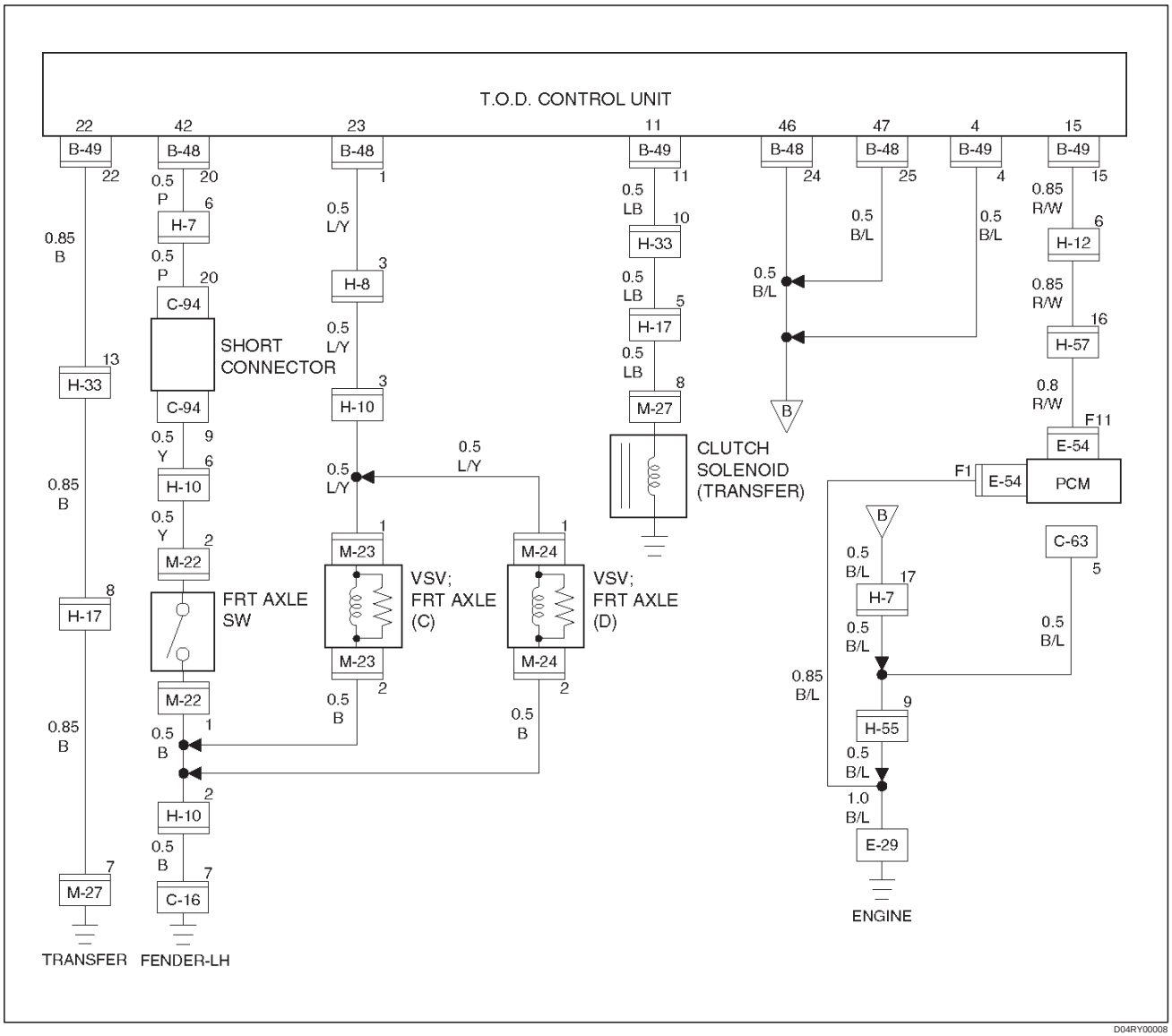

Downloaded from www.Manualslib.com manuals search engine

Step	Action	Yes	No
1	1. Turn on the starter switch. 2. Set the transfer to the 2H mode. Is the battery voltage observed between terminals 23 and 46?	Go to Step 2	Go to Step 5
2	Is the battery voltage observed between terminals 42 and 46?	Go to Step 3	Go to Step 6
3	1. Set the transfer to the high (TOD) mode. Does the voltage between terminals 23 and 46 indicate 0V?	Go to Step 4	The ECU has failed. Replace the ECU. Go to Step 7
4	Does the voltage between terminals 42 and 46 indicate 0V?	The phenomenon is not reproduced. Refer to “Troubles intermittently observed”. Go to Step 7	The shift on the fly system is failed (refer to Section 4C “Front Axle”). Go to Step 7
5	Does the TOD indicator show the 2H mode?	The ECU has failed. Replace the ECU. Go to Step 7	See “Trouble Diagnosis Depending on The Status of TOD Indicator”. Go to Step 7
6	Set the transfer to the high (TOD) mode. Does the voltage between terminals 23 and 46 indicate 0V?	The shift on the fly system has failed (refer to Section 4B1 “Driveline Control System”). Go to Step 7	The ECU has failed. Replace the ECU. Go to Step 7
7	1. Check that all the parts are mounted. 2. Clear the trouble code. Is this step complete?	Repeat the “Diagnosis Flow”.	Return to Step 7

Downloaded from www.Manualslib.com manuals search engine

Check flow	Trouble code	Phenomenon	Standard
12	32	The on/off signal (ADC) line of the shift on the fly system (front hub) is broken, or the line is short-circuited to the battery.	—

NOTE: The on/off signal line of the shift on the fly system is broken, or the line is short–circuited to the battery.

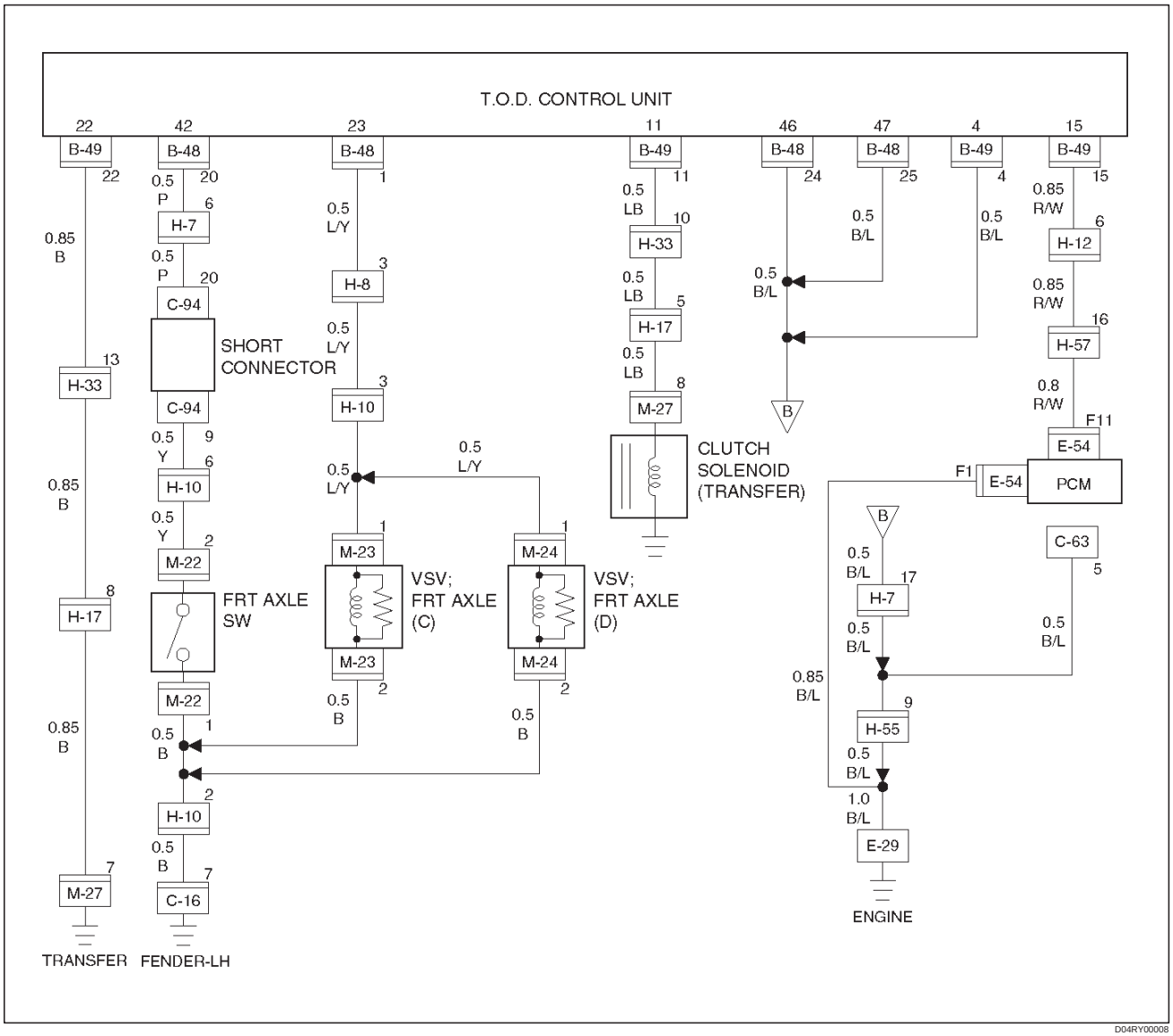

Downloaded from www.Manualslib.com manuals search engine

Step	Action	Yes	No
1	1. Turn off the starter switch. 2. Disconnect the ECU connector from ECU. Is the continuity established between terminals (B–48)1 and (B–48)24?	Go to Step 2	The harness is broken. Repair the circuit. Go to Step 3
2	Does the voltage between terminals (B–48)1 and (B–48)24 indicate 0V?	Go to Step 3	The battery is short-circuited. Repair the circuit. Go to Step 4
3	1. Turn off the starter switch. 2. Connect ECU connector. 3. Turn on the starter switch. 4. Set the transfer to the 2H mode. Is the battery voltage observed between terminals 23 and 46?	The phenomenon is not reproduced Refer to “Troubles intermittently observed”. Go to Step 4	The ECU has failed. Replace the ECU. Go to Step 4
4	1. Check that all the parts are mounted. 2. Clear the trouble code. Is this step complete?	Repeat the “Diagnosis Flow”.	Return to Step 4

Downloaded from www.Manualslib.com manuals search engine

Check flow	Trouble code	Phenomenon	Standard
13	33	The ADC line is short-circuited to GND.	—

NOTE:

- The on/off signal line of the shift on the fly system is short–circuited to GND.
- The system enters into the fail-safe mode because of fusing or system protection.

  (If a short–circuit is observed on GND, the output to the on/off signal line becomes 0V.)

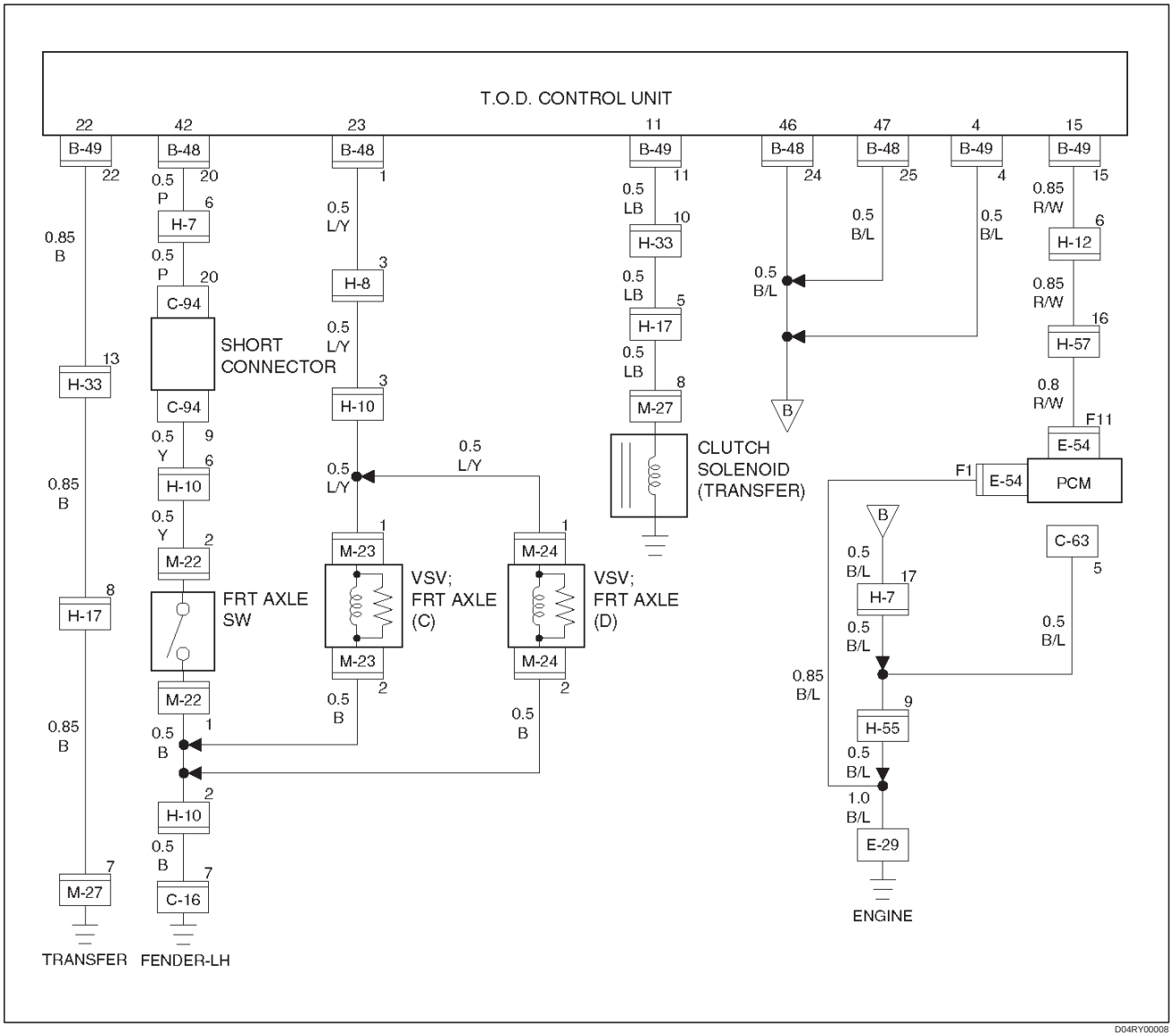

Downloaded from www.Manualslib.com manuals search engine

Step	Action	Yes	No
1	1. Turn off the starter switch. 2. Disconnect the ECU connector from ECU. Does the resistance between terminals (B–48)1 and (B–48)24 meet the standard, R = 21 ± 4 ohms?	The phenomenon is not reproduced. Refer to “Troubles intermittently observed”. Go to Step 4	Go to Step 2
2	Is the resistance between terminals (B–48)1 and (B–48)24 R<2 ohms?	The signal line circuit of the shift on the fly system is short-circuited to GND. Repair the circuit. Go to Step 4	Go to Step 3
3	Is the resistance between terminals (B–48)1 and (B–48)24 R= 9±7ohms?	The signal line circuit of the shift on the fly system is layer short-circuited*. Replace the valve (VSV). Go to Step 4	Go to Step 4
4	1. Check that all the parts are mounted. 2. Clear the trouble code. Is this step complete?	Repeat the “Diagnosis Flow”.	Return to Step 4

*Layer short-circuit : The coil is damaged by overcurrent.

Downloaded from www.Manualslib.com manuals search engine

Trouble Diagnosis Depending on The Status of TOD Indicator

Functional check with TOD indicator light is conducted prior to check on Charts A–H.

- After the starter is switched on, check and see if the status has become as tabulated below.

Is the continuity established between ECU terminal :					TOD Indicator indicate state
6 and 46	8 and 46	17 and 46	18 and 46	19 and 46	
Yes	Yes	Yes	Yes	Yes	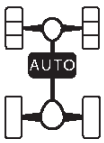 CHECK
No	No	No	No	No	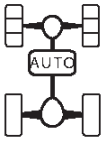 CHECK

C07RY00019

- If the status is as tabulated above, there is no problem. If not as tabulated above, inspect the harness.

Downloaded from www.Manualslib.com manuals search engine

Chart A	Indicator drive circuit	
Function of circuit	The circuit informs the indicator of the working condition of the ECU.	
Fail condition	All the TOD indicator lamps and CHECK lamp are lit, and go off momentarily at an interval of about two seconds.	
Indicator lamp status	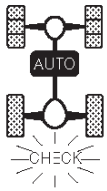	—
Transfer position	2H, TOD, 4L	—

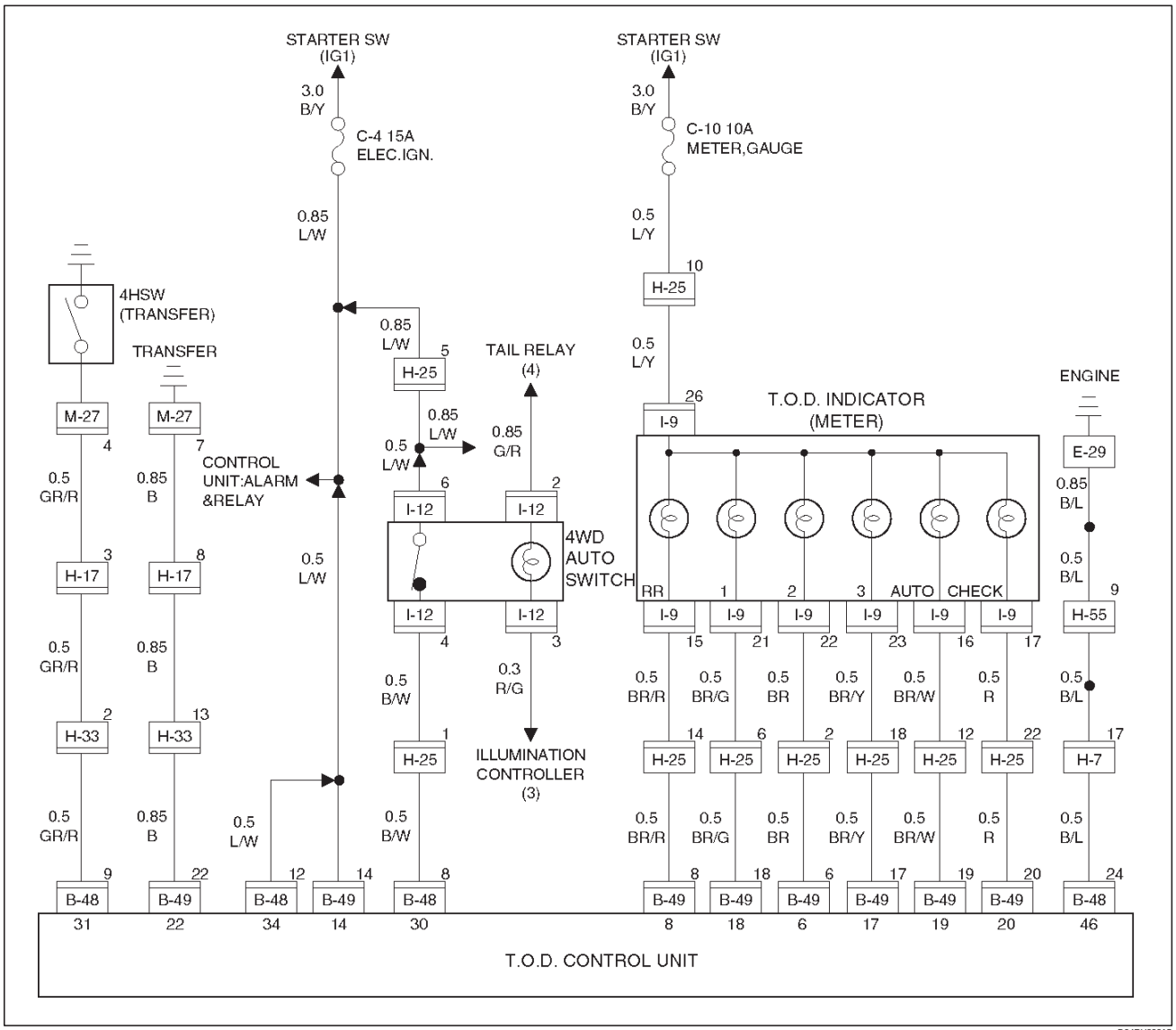

Downloaded from www.Manualslib.com manuals search engine

Step	Action	Yes	No
1	Turn on the starter switch. Is the battery voltage observed between terminals 14 and 46 or 34 and 46?	The ECU has failed. Replace the ECU. Go to Step 2	Check the battery circuit. Go to Step 2
2	Check that all the parts are mounted. Is this step complete?	Repeat the “Diagnosis Flow”.	Return to Step 2

Downloaded from www.Manualslib.com manuals search engine

Chart B–1	The 4WD switch circuit wires are broken or short-circuited to the GND	
Function of circuit	—	
Fail condition	Even after the transfer position is select from TOD to 2H, the indicator lamp status is not changed.	
Indicator lamp status	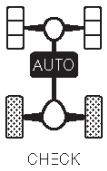	—
Transfer position	2H	—

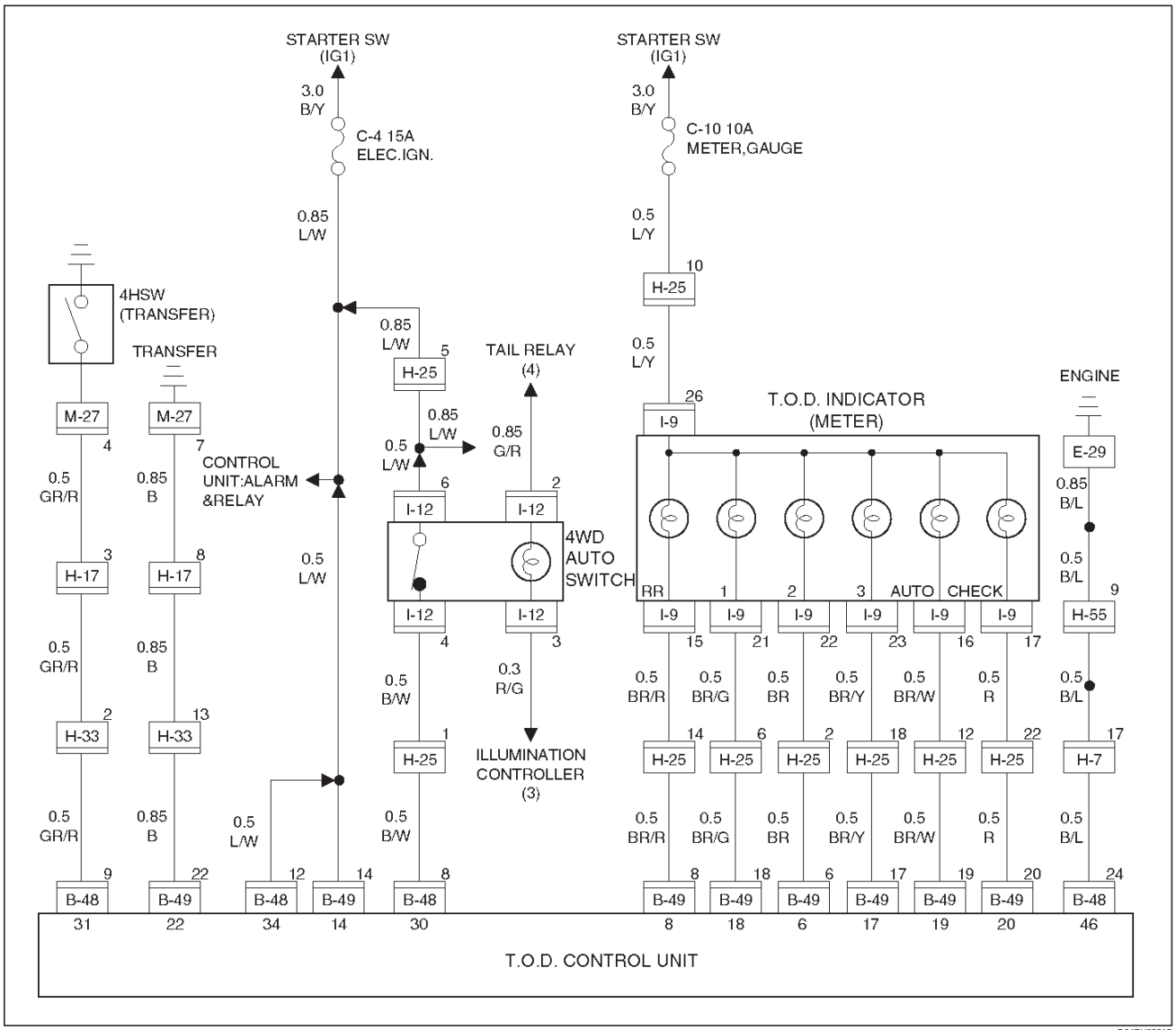

Downloaded from www.Manualslib.com manuals search engine

Step	Action	Yes	No
1	1. Turn on the starter switch. When the 4WD Auto Switch is select to the 4WD position, is 0 V observed between terminal 30 and 46?	Go to Step 2	Repair the 4WD Auto Switch circuit. Go to Step 4
2	When the 4WD Auto Switch is select to the 2WD position, is 12 V observed between terminals 30 and 46?	Go to Step 3	Repair the 4WD Auto Switch circuit. Go to Step 4
3	When the transfer lever is shifted to the 4L position, is battery boltage observed between terminals 19 and 46?	The phenomenon is not reproduced. Refer to “Troubles intermittently observed”. Go to Step 4	Replace the ECU. Go to Step 4
4	Check that all the parts are mounted. Is this step complete?	Repeat the “Diagnosis Flow”.	Return to Step 4

Downloaded from www.Manualslib.com manuals search engine

Chart B–2	The 4WD AUTO SWITCH circuit is short to battery.
Function of circuit	—
Fail condition	Even after the transfer mode is select from 2H to TOD.
Indicator lamp status	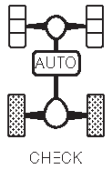
Transfer position	TOD

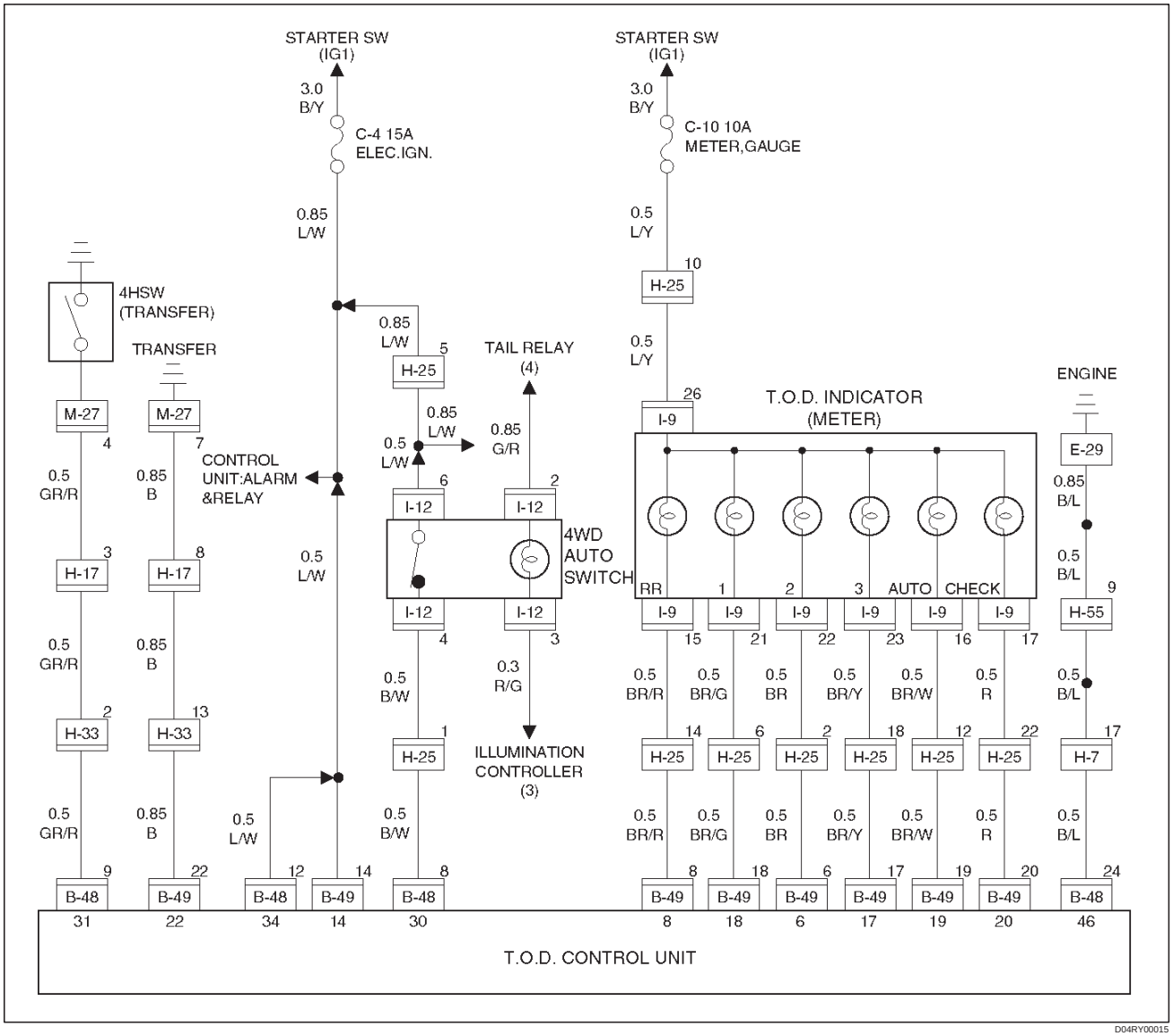

Downloaded from www.Manualslib.com manuals search engine

Step	Action	Yes	No
1	When the 4WD Auto Switch is select to the 4WD position, is 0 V observed between terminal 30 and 46 (4H switch)?	Go to Step 2	Repair the 4WD Auto Switch circuit. Go to Step 7
2	When the 4WD Auto Switch is select to the 2WD position, is 12 V observed between terminals 30 and 46 (4H switch)?	Go to Step 3	Repair the 4WD Auto Switch circuit. Go to Step 7
3	1. Disconnect the ECU connector. Is the continuity established between terminals (B–49)14 and (B–49)17?	Go to Step 4	Replace TOD indicator lamp bulb. Go to Step 7
4	Is the continuity established between terminals (B–49)14 and (B–49)6?	Go to Step 5	Replace TOD indicator lamp bulb. Go to Step 7
5	Is the continuity established between terminals (B–49)14 and (B–49)18?	Go to Step 6	Replace TOD indicator lamp bulb. Go to Step 7
6	Is the continuity established between terminals (B–49)14 and (B–49)19?	Replace ECU. Go to Step 7	Replace TOD indicator lamp bulb. Go to Step 7
7	Check that all the parts are mounted. Is this step complete?	Repeat the “Diagnosis Flow”.	Return to Step 7

Downloaded from www.Manualslib.com manuals search engine

Chart C–1	4H switch circuit wires are broken or the battery is short-circuited.
Function of circuit	—
Fail condition	When the 4WD Auto Switch is 4WD mode. When the lever is shifted from 4L to TOD, the 4L mode remains on the indicator and the TOD mode is displayed without turning off the previous mode.
Indicator lamp status	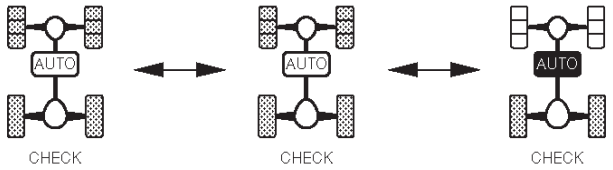
Transfer position	4L <——> Neutral <——> TOD

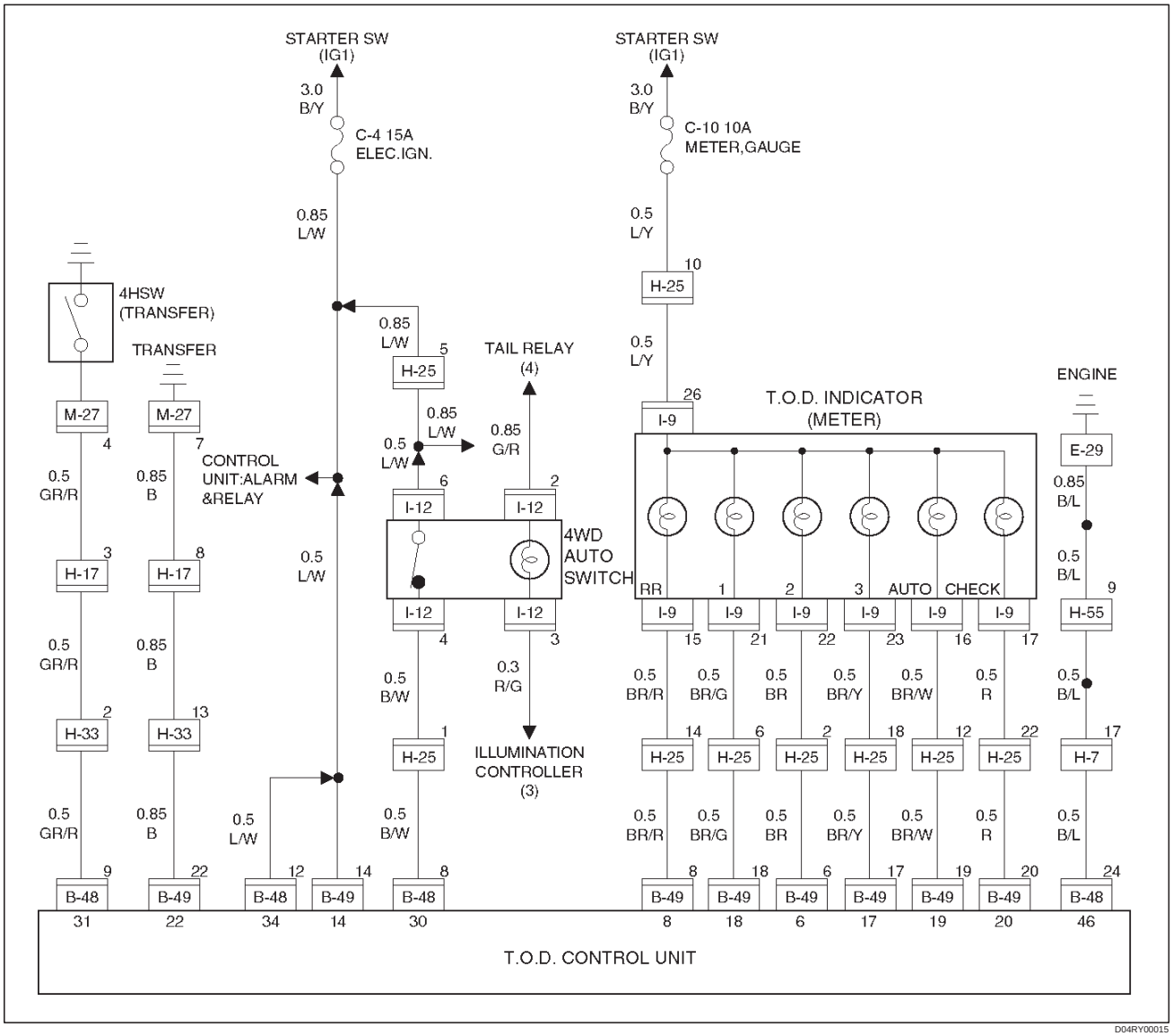

Downloaded from www.Manualslib.com manuals search engine

Step	Action	Yes	No
1	1. Turn on the starter switch. When the transfer lever is shifted to the high position, is 5V observed between terminals 31 and 46 (4H switch)?	Go to Step 2	Go to Step 4
2	When the transfer lever is shifted to the 4L position, is 5V observed between terminals 31 and 46 (4H switch)?	Go to Step 3	Go to Step 4
3	When the transfer lever is shifted to the neutral position, is 0V observed between terminals 31 and 46 (4H switch)?	Replace the ECU. Go to Step 4	Go to Step 4
4	1. Turn off the starter switch. 2. Disconnect the ECU connector. 3. Turn on the starter switch. When the transfer lever is shifted to the high position, is 12V observed between terminals (B–48)9 and (B–48)24 (4H switch)?	Go to Step 5	Go to Step 7
5	When the transfer lever is shifted to the neutral position, is 0V observed between terminals (B–48)9 and (B–48)24 (4H switch)?	Go to Step 6	Go to Step 7
6	When the transfer lever is shifted to the 4L position, is 12V observed between terminals (B–48)9 and (B–48)24 (4H switch)?	The 4H switch circuit battery is short-circuited between ECU and transfer. Repair the circuit. Go to Step 14	Go to Step 7
7	Turn off the starter switch. When the transfer lever is shifted to the neutral position, is the continuity established between terminals (B–48)9 and (B–48)24 (4H switch)?	Go to Step 8	Go to Step 10
8	When the transfer lever is shifted to the high position, is the continuity established between terminals (B–48)9 and (B–48)24?	Go to Step 10	Go to Step 9
9	When the transfer lever is shifted to the 4L position, is the continuity established between terminals (B–48)9 and (B–48)24?	Go to Step 14	The phenomenon is not reproduced. Refer to “Troubles intermittently observed”. Go to Step 10
10	When the transfer lever is shifted to the neutral position, is the continuity established between terminals (M–27)4 and (M–27)7?	Go to Step 11	Repair the transfer assembly. Go to Step 14
11	When the transfer lever is shifted to the high position, is the continuity established between transfer connector terminals (M–27)4 and (M–27)7?	Repair the transfer assembly. Go to Step 14	Go to Step 12
12	When the transfer lever is shifted to the 4L position, is the continuity established between transfer connector terminals (B–48)9 and (M–27)4?	Repair the transfer assembly. Go to Step 14	Go to Step 13

Downloaded from www.Manualslib.com manuals search engine

Step	Action	Yes	No
13	Is the continuity established between transfer terminals (M–27)4 and body?	The ECU has failed. Replace the ECU. Go to Step 14	The harness is broken between terminal (M-27)4 and GND. Repair the circuit. Go to Step 14
14	Check that all the parts are mounted. Is this step complete?	Repeat the “Diagnosis Flow”.	Return to Step 14

Downloaded from www.Manualslib.com manuals search engine

Chart C–2	The 4H switch circuit is short-circuited to GND.
Function of circuit	—
Fail condition	When the transfer lever is shifted to 4L, the indicator lamp status is not changed.
Indicator lamp status	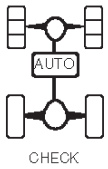
Transfer position	4L

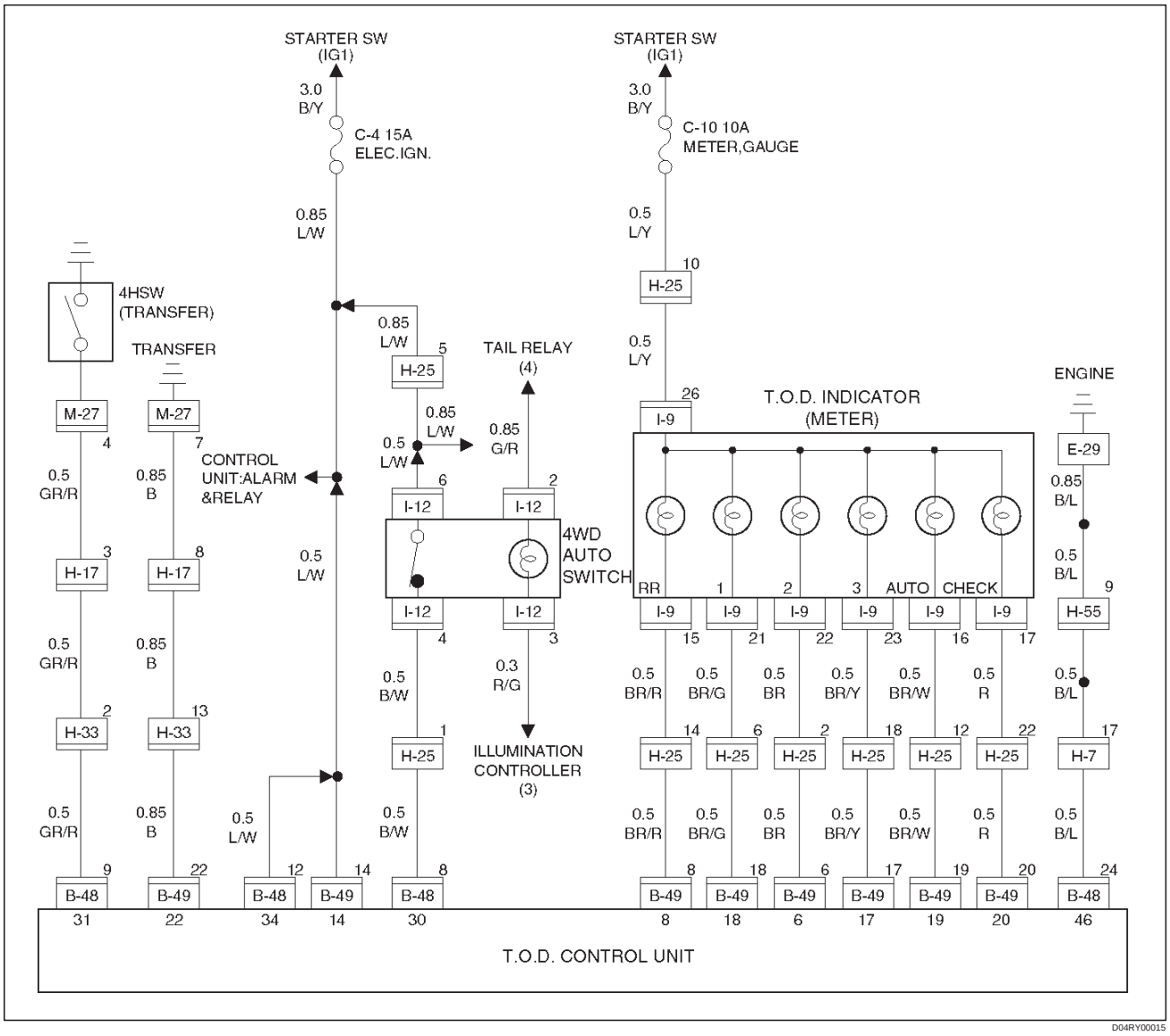

Downloaded from www.Manualslib.com manuals search engine

Step	Action	Yes	No
1	When the transfer lever is shifted to the High position, is 5V observed between terminals 31 and 46 (4H switch)?	Go to Step 2	Go to Step 14
2	When the transfer lever is shifted to the neutral position, is 0V observed between terminals 31 and 46 (4H switch)?	Go to Step 3	Go to Step 14
3	When the transfer lever is shifted to the 4L position, is 5V observed between terminals 31 and 46 (4H switch)?	Go to Step 4	Go to Step 14
4	1. Turn off the starter switch. Is the continuity established between terminals 14 and 17?	Go to Step 5	Replace TOD indcator lamp bulb. Go to Step 23
5	Is the continuity established between terminals 14 and 6?	Go to Step 6	Replace TOD indicator lamp bulb. Go to Step 23
6	Is the continuity established between terminals 14 and 18?	Go to Step 7	Replace TOD indicator lamp bulb. Go to Step 23
7	Is the continuity established between terminals 14 and 19?	Go to Step 8	Replace TOD indicator lamp bulb. Go to Step 23
8	Is the continuity established between terminals 14 and 8?	Go to Step 9	Replace TOD indicator lamp bulb. Go to Step 23
9	1. Turn on the starter switch. 2. Shift the transfer lever is shifted to the 4L position. Is 0 V observed between terminals 17 and 22?	Go to Step 10	The ECU has failed. Replace the ECU. Go to Step 23
10	Is 0 V observed between terminals 6 and 22?	Go to Step 11	The ECU has failed. Replace the ECU. Go to Step 23
11	Is 0 V observed between terminals 18 and 22?	Go to Step 12	The ECU has failed. Replace the ECU. Go to Step 23
12	Is 0 V observed between terminals 19 and 22?	Go to Step 13	The ECU has failed. Replace the ECU. Go to Step 23
13	Is 0 V observed between terminals 8 and 22?	The phenomenon is not reproduced. Refer to “Troubles intermittently observed”. Go to Step 23	The ECU has failed. Replace the ECU. Go to Step 23

Downloaded from www.Manualslib.com manuals search engine

Step	Action	Yes	No
14	1. Turn off the starter switch. 2. Disconnect the ECU connector. When the transfer lever is shifted to the neutral position, is the continuity established between terminals (B–48)9 and (B–48)24 (4H switch)?	Go to Step 15	Go to Step 17
15	When the transfer lever is shifted to the high position, is the continuity established between terminals (B–48)9 and (B–48)24?	Go to Step 17	Go to Step 16
16	When the transfer lever is shifted to the 4L position, is the continuity established between terminals (B–48)9 and (B–48)24?	Go to Step 17	The ECU has failed. Replace the ECU. Go to Step 23
17	1. Disconnect the H–17 connector. When the transfer lever is shifted to the neutral position between high and 4L, is the continuity established between terminals (H-17)3 and (B-48)9?	Go to Step 18	Go to Step 20
18	When the transfer lever is shifted to the high position, is the continuity established between transfer connector terminals (H-17)3 and (B-48)9?	Go to Step 20	Go to Step 19
19	When the transfer lever is shifted to the 4L position, is the continuity established between transfer connector terminals (H-17)3 and (B-48)9?	Go to Step 20	GND is short-circuited between terminals (B-48)9 and (H-17)3. Repair the circuit. Go to Step 23
20	1. Disconnect the M–27 connector. When the transfer lever is shifted to the neutral position between high and 4L, is the continuity established between terminals (M-27)4 and (B-48)9?	Go to Step 21	Repair the transfer assembly. Go to Step 23
21	When the transfer lever is shifted to the high position, is the continuity established between terminals (M-27)4 and (B-48)9?	Repair the transfer assembly. Go to Step 23	Go to Step 22
22	When the transfer lever is shifted to the 4L position, is the continuity established between terminals (M-27)4 and (B-48)9?	Repair the transfer assembly. Go to Step 23	GND is short-circuited between terminals (B-48)9 and (M–27)4. Repair the circuit. Go to Step 23
23	Check that all the parts are mounted. Is this step complete?	Repeat the “Diagnosis Flow”.	Return to Step 23

Downloaded from www.Manualslib.com manuals search engine

Chart D–1	4L switch circuit wires are broken or the battery is short-circuited.	
Function of circuit	—	
Fail condition	The TOD mode is displayed in the neutral position between high and 4L. When the lever is shifted to the 4L position, the TOD mode is displayed.	
Indicator lamp status	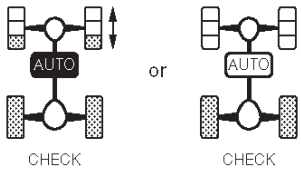	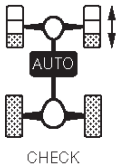
Transfer position	4L	Neutral

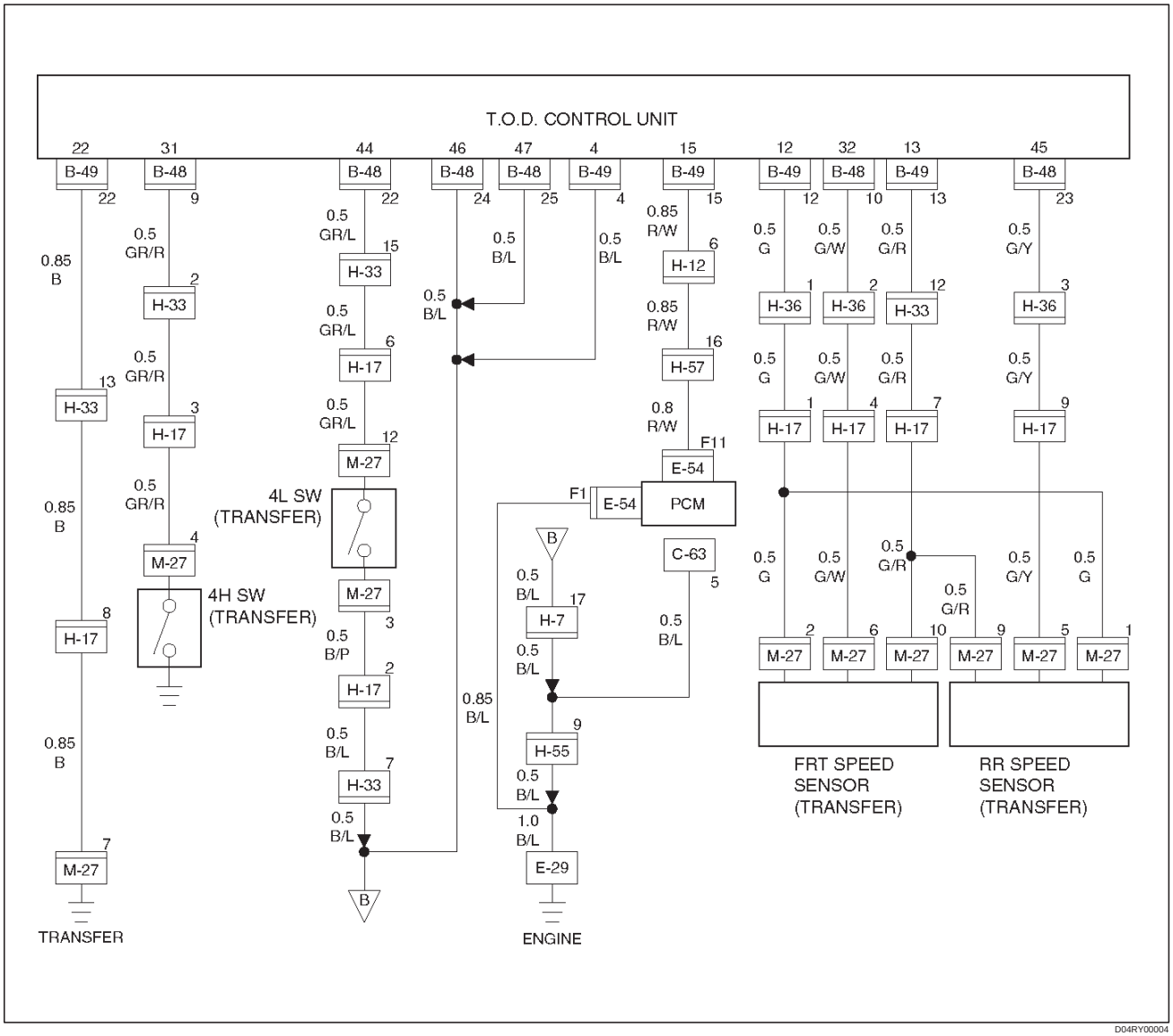

Downloaded from www.Manualslib.com manuals search engine

Step	Action	Yes	No
1	Turn on the starter switch. When the transfer lever is shifted to the high position, is 5V observed between terminals 44 and 46 (4L switch)?	Go to Step 2	Go to Step 4
2	When the transfer lever is shifted to the neutral position, is 0V observed between terminals 44 and 46 (4L switch)?	Go to Step 3	Go to Step 4
3	When the transfer lever is shifted to the 4L position, is 0V observed between terminals 44 and 46 (4L switch)?	The ECU has failed. Replace the ECU. Go to Step 4	Go to Step 4
4	1. Turn off the starter switch. 2. Disconnect the ECU connector. 3. Turn on the starter switch. When the transfer lever is shifted to the high position, is 12V observed between terminals (B–48)22 and (B–48)24 (4L switch)?	Go to Step 5	Go to Step 7
5	When the transfer lever is shifted to the neutral position, is 0V observed between terminals (B–48)22 and (B–48)24 (4L switch)?	Go to Step 6	Go to Step 7
6	When the transfer lever is shifted to the 4L position, is 0V observed between terminals (B–48)22 and (B–48)24 (4L switch)?	The 4L switch circuit battery is short-circuited between ECU and transfer. Repair the circuit Go to Step 13	Go to Step 7
7	Turn off the starter switch. When the transfer lever is shifted to the high position, is the continuity established between terminals (B–48)22 and (B–48)24 (4L switch)?	Go to Step 10	Go to Step 8
8	When the transfer lever is shifted to the neutral position between high and 4L, is the continuity established between terminals (B–48)22 and (B–48)24 (4L switch)?	Go to Step 9	Go to Step 10
9	When the transfer lever is shifted to the 4L position, is the continuity established between terminals (B–48)22 and (B–48)24 (4L switch)?	The phenomenon is not reproduced. Refer to “Troubles intermittently observed”. Go to Step 13	Go to Step 10
10	1. Disconnect the M–27 connector. When the transfer lever is shifted to the neutral position between high and 4L, is the continuity established between transfer connector terminals (M-27)12 and GND?	Wires are broken between transfer connector (M-27) and floor connector (H-17). Repair the circuit. Go to Step 11	Repair the transfer assembly. Go to Step 13
11	When the transfer lever is shifted to the 4L position, is the continuity established between transfer connector terminals (M-27)12 and GND?	Go to Step 12	Repair the transfer assembly. Go to Step 13

Downloaded from www.Manualslib.com manuals search engine

Step	Action	Yes	No
12	When the transfer lever is shifted to the high position, is the continuity established between transfer connector terminals (M-27)12 and GND?	Repair the transfer assembly. Go to Step 13	Go to Step 13
13	Check that all the parts are mounted. Is this step complete?	Repeat the “Diagnosis Flow”.	Return to Step 13

Downloaded from www.Manualslib.com manuals search engine

Chart D–2	The 4L switch circuit is short-circuited to GND.
Function of circuit	—
Fail condition	The 4L mode is displayed even in the 2H or TOD.
Indicator lamp status	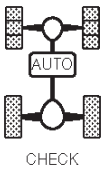
Transfer position	2H or TOD

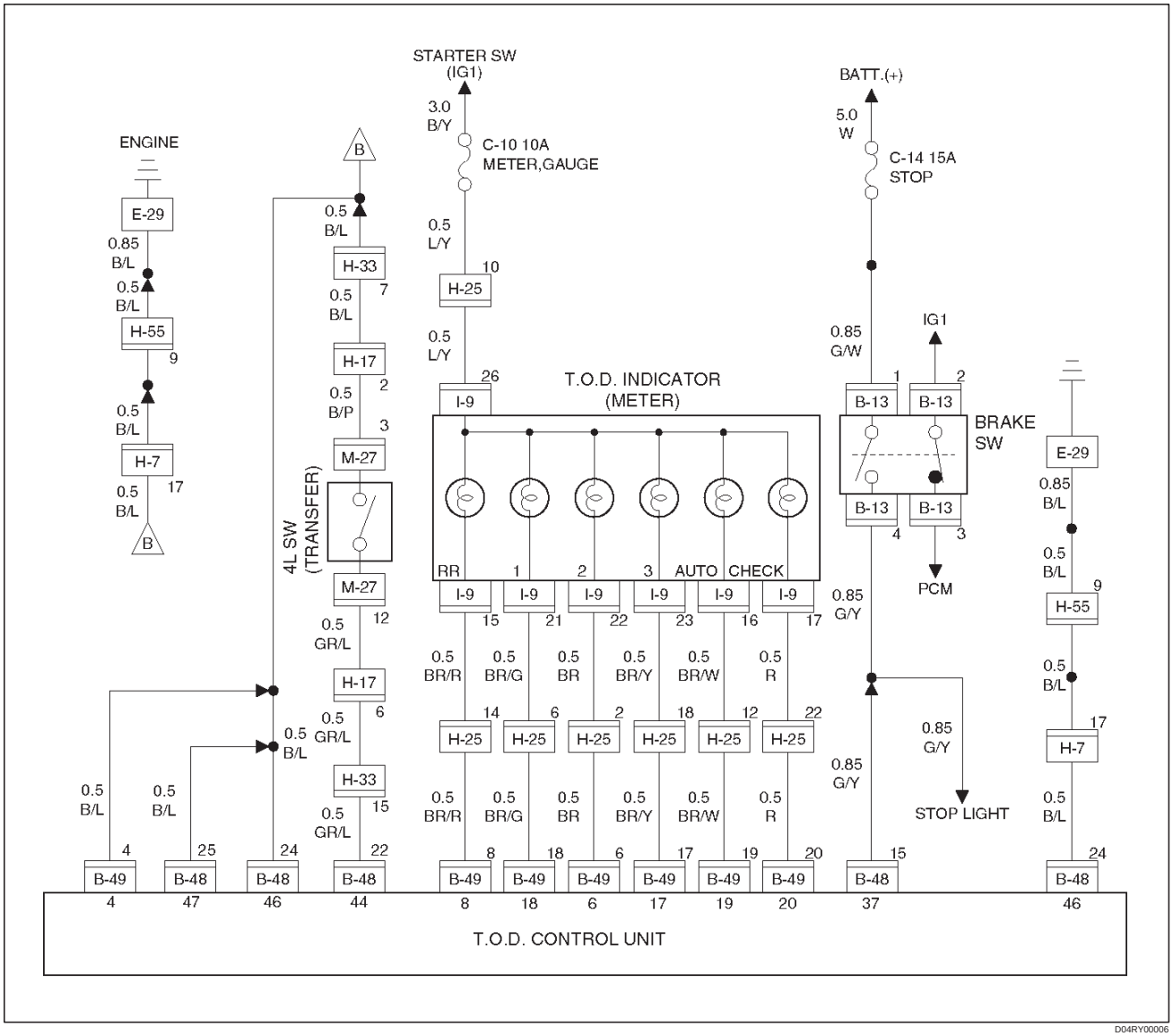

Downloaded from www.Manualslib.com manuals search engine

Step	Action	Yes	No
1	When the transfer lever is shifted to the high position, is 5V observed between terminals 44 and 46 (4L switch)?	Go to Step 2	Go to Step 7
2	When the transfer lever is shifted to the neutral position, is 0V observed between terminals 44 and 46 (4L switch)?	Go to Step 3	Go to Step 7
3	When the transfer lever is shifted to the 4L position, is 0V observed between terminals 44 and 46 (4L switch)?	Go to Step 4	Go to Step 7
4	1. Select the 4WD Auto Switch to the 2H position. Is 12V observed between terminals 17 and 46?	Go to Step 5	The ECU has failed. Replace the ECU. Go to Step 16
5	Is 12V observed between terminals 6 and 46?	Go to Step 6	The ECU has failed. Replace the ECU. Go to Step 16
6	Is 12V observed between terminals 18 and 46?	The phenomenon is not reproduced. Refer to “Troubles intermittently observed”. Go to Step 16	The ECU has failed. Replace the ECU. Go to Step 16
7	1. Turn off the starter switch. 2. Disconnect the ECU connector. When the transfer lever is shifted to the neutral position between High and 4L, is the continuity established between terminals (B–48)22 and (B–48)24?	Go to Step 8	Go to Step 10
8	When the transfer lever is shifted to the 4L position, is the continuity established between terminals (B–48)22 and (B–48)24?	Go to Step 9	Go to Step 10
9	When the transfer lever is shifted to the high position, is the continuity established between terminals (B–48)22 and (B–48)24?	Go to Step 10	The ECU has failed. Replace the ECU. Go to Step 16
10	1. Disconnect the M-17 connector. When the transfer lever is shifted to the neutral position between high and 4L, is the continuity established between terminals (H-17)6 and (B-48)24?	Go to Step 11	Go to Step 13
11	When the transfer lever is shifted to the 4L position, is the continuity established between transfer connector terminals (H-17)6 and (B-48)24?	Go to Step 12	Go to Step 13
12	When the transfer lever is shifted to the high position, is the continuity established between terminals (H-17)6 and (B-48)24?	Go to Step 13	GND is short-circuited between terminals (B–48)22 and (H-17)6. Repair the circuit. Go to Step 16
13	1. Disconnect the M-27 connector. When the transfer lever is shifted to the neutral position between high and 4L, is the continuity established between terminals (M-27)12 and GND?	Go to Step 14	Repair the transfer assembly. Go to Step 16

Downloaded from www.Manualslib.com manuals search engine

Step	Action	Yes	No
14	When the transfer lever is shifted to the 4L position, is the continuity established between terminals (M-27)12 and GND?	Go to Step 15	Repair the transfer assembly. Go to Step 16
15	When the transfer lever is shifted to the high position, is the continuity established between terminals (M-27)12 and GND?	Repair the transfer assembly. Go to Step 16	GND is short-circuited between terminals (H–17)6 and (M-27)12. Repair the circuit. Go to Step 16
16	Check that all the parts are mounted. Is this step complete?	Repeat the “Diagnosis Flow”.	Return to Step 16

Downloaded from www.Manualslib.com manuals search engine

Chart E–1	AXLE switch circuit wires are broken.	
Function of circuit	—	
Fail condition	Both the TOD and 4L modes are disabled. (The transition status is not removed.)	
Indicator lamp status	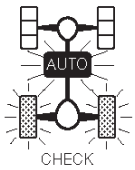 Blinking	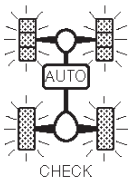 Blinking
Transfer position	TOD	4L

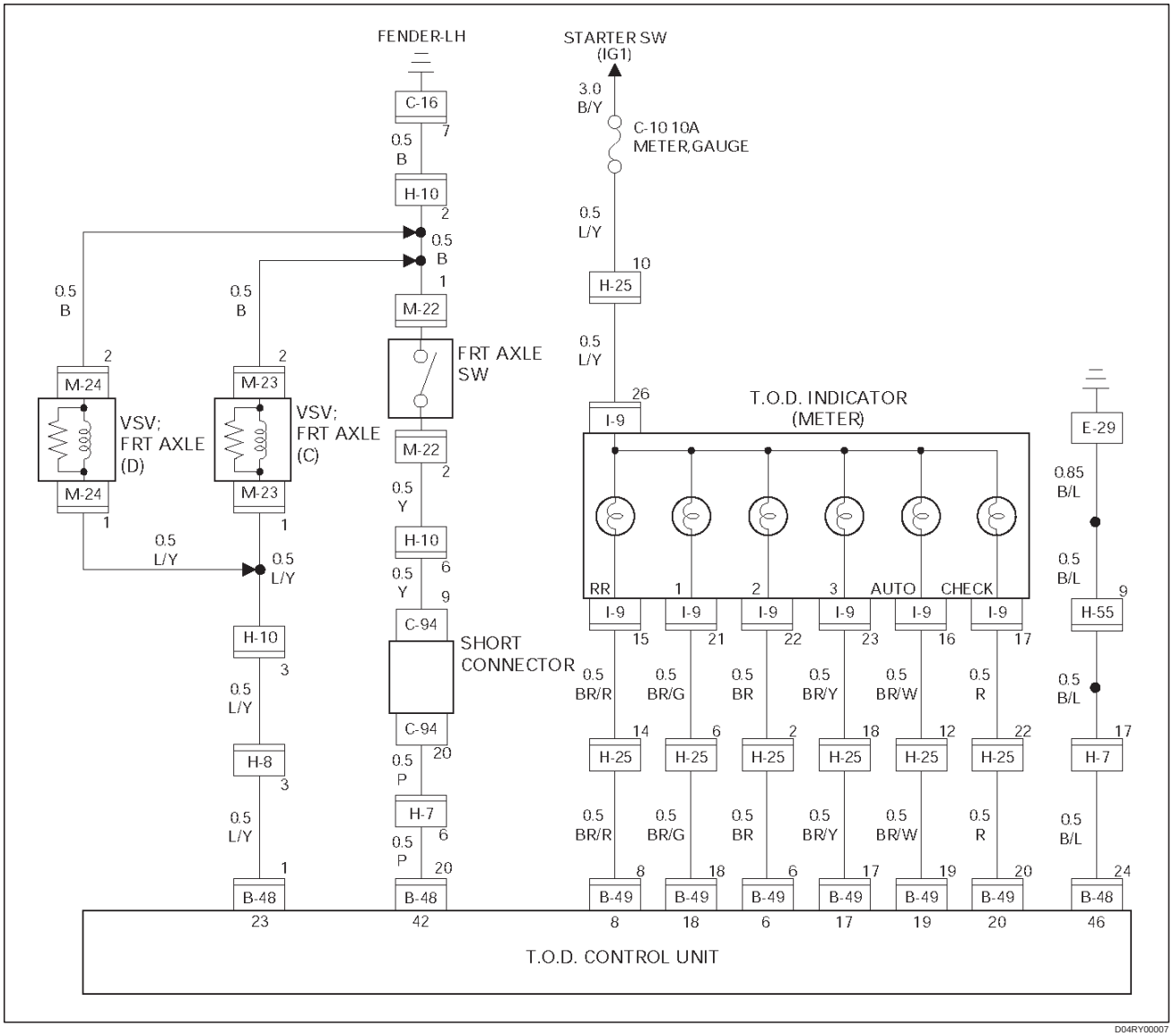

Downloaded from www.Manualslib.com manuals search engine

Step	Action	Yes	No
1	Start the engine. When the transfer lever is shifted to the neutral position between high and 4L, is the battery voltage observed between terminals 42 and 46?	Go to Step 2	Go to Step 7
2	When the transfer lever is shifted to the high position and 4WD Auto switch selected to 4WD position, is 0V observed between terminals 42 and 46?	Go to Step 3	Go to Step 7
3	When the transfer lever is shifted to the 4L position, is 0V observed between terminals 42 and 46?	Go to Step 4	Go to Step 7
4	Shift the transfer lever to the 4L position. Is 0V observed between terminals 17 and 46?	Go to Step 5	The ECU has failed. Replace the ECU. Go to Step 19
5	Is 0V observed between terminals 6 and 46?	Go to Step 6	The ECU has failed. Replace the ECU. Go to Step 19
6	Is 0V observed between terminals 18 and 46?	The phenomenon is not reproduced. Refer to “Troubles intermittently observed”. Go to Step 19	The ECU has failed. Replace the ECU. Go to Step 19
7	When the transfer lever is shifted to the high position and 4WD Auto Switch selected to the 2WD position, is the battery voltage observed between terminals 23 and 46?	Go to Step 8	Go to Step 11
8	When the transfer lever is shifted to the neutral position between high and 4L, is the battery voltage observed between terminals 23 and 46?	Go to Step 9	Go to Step 11
9	When the transfer lever is shifted to the high position (TOD mode), is 0V observed between terminals 23 and 46?	Go to Step 10	Go to Step 11
10	When the transfer lever is shifted to the 4L position, is 0V observed between terminals 23 and 46?	Go to Step 12	Go to Step 11
11	Is any of the trouble codes 28, 32 and 33 recorded?	Examine the trouble based on “Diagnosis from Trouble Codes”. Go to Step 19	The ECU has failed. Replace the ECU. Go to Step 19
12	1. Turn off the starter switch. 2. Disconnect the ECU connector. Does the resistance between terminals (B–48)1 and (B–48)24 meet the standard, 17< R < 25 ohm?	Go to Step 13	Repair the circuit of replace the VSV. Go to Step 19
13	1. Turn on the starter switch. When the 4WD Auto Switch is select to the 2WD position, is the battery voltage supplied to each VSV?	Go to Step 14	Repair the circuit of replace the VSV. Go to Step 19
14	When the transfer lever is shifted to the neutral position between high and 4L, is the battery voltage supplied to each VSV?	Go to Step 15	Repair the circuit of replace the VSV. Go to Step 19

Downloaded from www.Manualslib.com manuals search engine

Step	Action	Yes	No
15	When the transfer lever is shifted to the high position and 4WD Auto Switch selected to 4WD position, is 0V observed on each VSV?	Go to Step 16	Repair the circuit of replace the VSV. Go to Step 19
16	When the transfer lever is shifted to the 4L position, is 0V observed on each VSV?	Go to Step 17	Repair the circuit of replace the VSV. Go to Step 19
17	Is the vacuum pressure supplied to the VSV?	Go to Step 18	Repair the vacuum system. Go to Step 19
18	Can the single AXLE switch enable and disable the continuity?	Repair the shift on the fly system (refer to Section 4B1 “Driveline Control System”). Go to Step 19	Replace the AXLE switch (refer to Section 4B1 “Driveline Control System”). Go to Step 19
19	Check that all the parts are mounted. Is this step complete?	Repeat the “Diagnosis Flow”.	Return to Step 19

Downloaded from www.Manualslib.com manuals search engine

Chart E–2	The AXLE switch circuit is short-circuited to GND.
Function of circuit	—
Fail condition	Even after the 4WD Auto Switch is select to the 2WD position, the 2WD mode is not enabled. (The transition status is not removed.)
Indicator lamp status	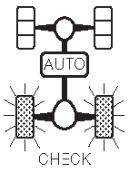
Transfer position	2H

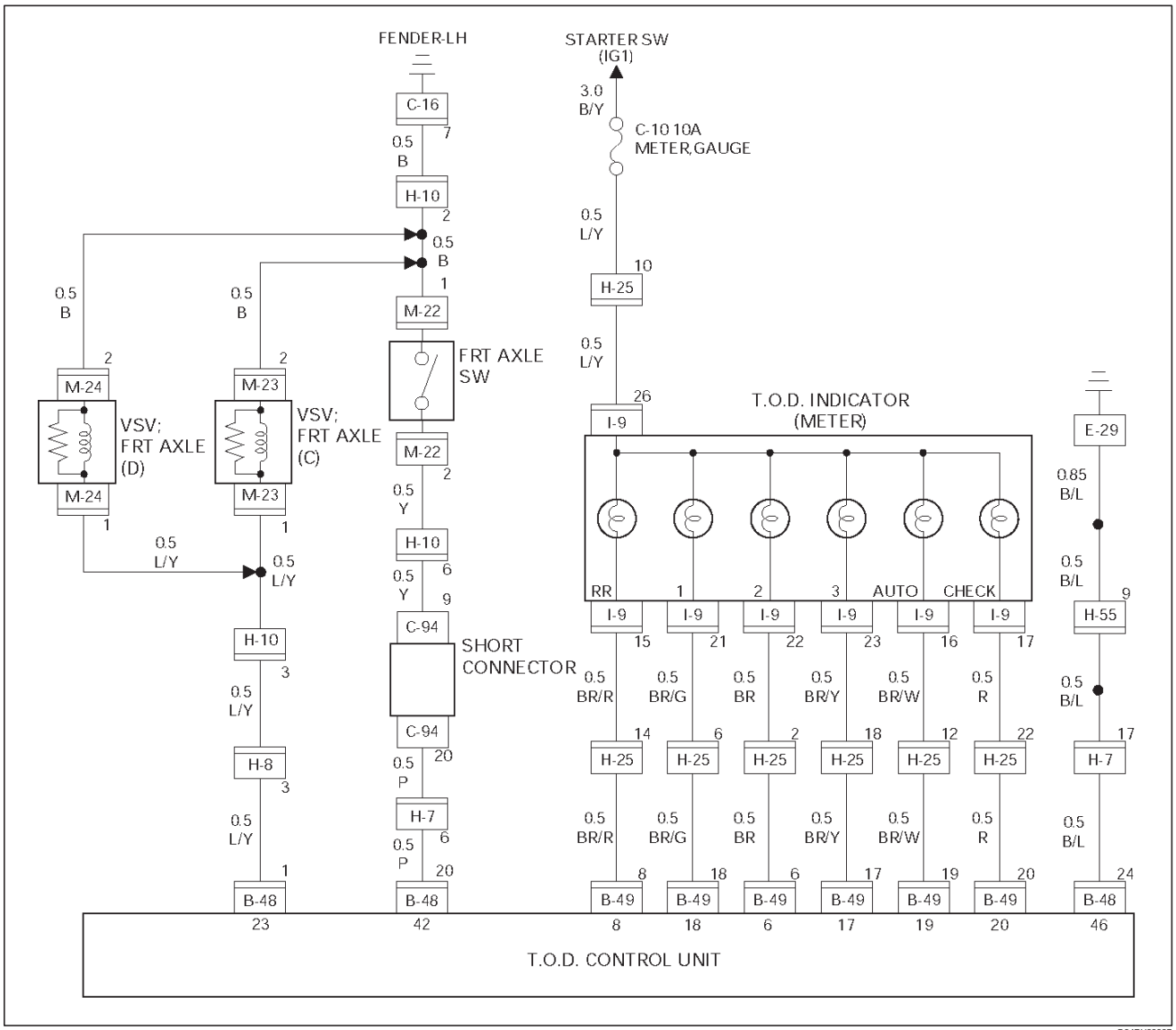

Downloaded from www.Manualslib.com manuals search engine

Step	Action	Yes	No
1	Start the engine. When the transfer lever is shifted to the neutral position between high and 4L, is the battery voltage observed between terminals 42 and 46?	Go to Step 2	Go to Step 7
2	When the transfer lever is shifted to the high position and 4WD Auto Switch selected to 4WD position, is 0V observed between terminals 42 and 46?	Go to Step 3	Go to Step 7
3	When the transfer lever is shifted to the 4L position, is 0V observed between terminals 10 and 19?	Go to Step 4	Go to Step 7
4	Select the 4WD Auto Switch to the 2WD position. Is 12V observed between terminals 17 and 46?	Go to Step 5	Go to Step 19
5	Is 12V observed between terminals 6 and 46?	Go to Step 6	Go to Step 19
6	Is 12V observed between terminals 18 and 46?	The phenomenon is not reproduced. Refer to “Troubles intermittently observed”. Go to Step 19	The ECU has failed. Replace the ECU. Go to Step 17
7	When the 4WD Auto Switch is select to the 2WD position, is the battery voltage observed between terminals 23 and 46?	Go to Step 8	Go to Step 11
8	When the transfer lever is shifted to the neutral position between high and 4L, is the battery voltage observed between terminals 23 and 46?	Go to Step 9	Go to Step 11
9	When the transfer lever is shifted to the high position and 4WD Auto Switch selected to 4WD position, is 0V observed between terminals 23 and 46?	Go to Step 10	Go to Step 11
10	When the transfer lever is shifted to the 4L position, is 0V observed between terminals 23 and 46?	Go to Step 12	Go to Step 11
11	Is any of the trouble codes 28, 32 and 33 recorded?	Examine the trouble based on “Diagnosis from Trouble Codes”. Go to Step 19	The ECU has failed. Replace the ECU. Go to Step 19
12	1. Turn off the starter switch. 2. Disconnect the ECU connector. Does the resistance between terminals (B–48)1 and (B–48)24 meet the standard, 17< R < 25 ohm?	Go to Step 13	Repair the circuit of replace the VSV. Go to Step 19
13	1. Connect the ECU connector. 2. Turn on the starter switch. When the 4WD Auto Switch is select to the 2WD position, is the battery voltage supplied to each VSV?	Go to Step 14	Repair the circuit of replace the VSV. Go to Step 19
14	When the transfer lever is shifted to the neutral position between high and 4L, is the battery voltage supplied to each VSV?	Go to Step 15	Repair the circuit of replace the VSV. Go to Step 19
15	When the transfer lever is shifted to the high position and 4WD Auto Switch selected to 4WD position, is 0V observed on each VSV?	Go to Step 16	Repair the circuit of replace the VSV. Go to Step 19

Downloaded from www.Manualslib.com manuals search engine

Step	Action	Yes	No
16	When the transfer lever is shifted to the 4L position, is 0V observed on each VSV?	Go to Step 17	Repair the circuit of replace the VSV. Go to Step 19
17	Is the vacuum pressure supplied to the VSV?	Go to Step 18	Repair the vacuum system. Go to Step 19
18	Can the single AXLE switch enable and disable the continuity?	Repair the shift on the fly system (refer to Section 4B1 “Driveline Control System”). Go to Step 19	Replace the AXLE switch (refer to Section 4B1 “Driveline Control System”). Go to Step 19
19	Check that all the parts are mounted. Is this step complete?	Repeat the “Diagnosis Flow”.	Return to Step 19

Downloaded from www.Manualslib.com manuals search engine

Chart G	The trouble codes are displayed.
Function of circuit	—
Fail condition	The CHECK lamp continues blinking irregularly. 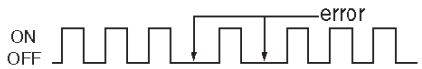
Indicator lamp status	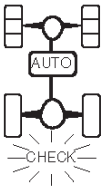
Transfer position	—

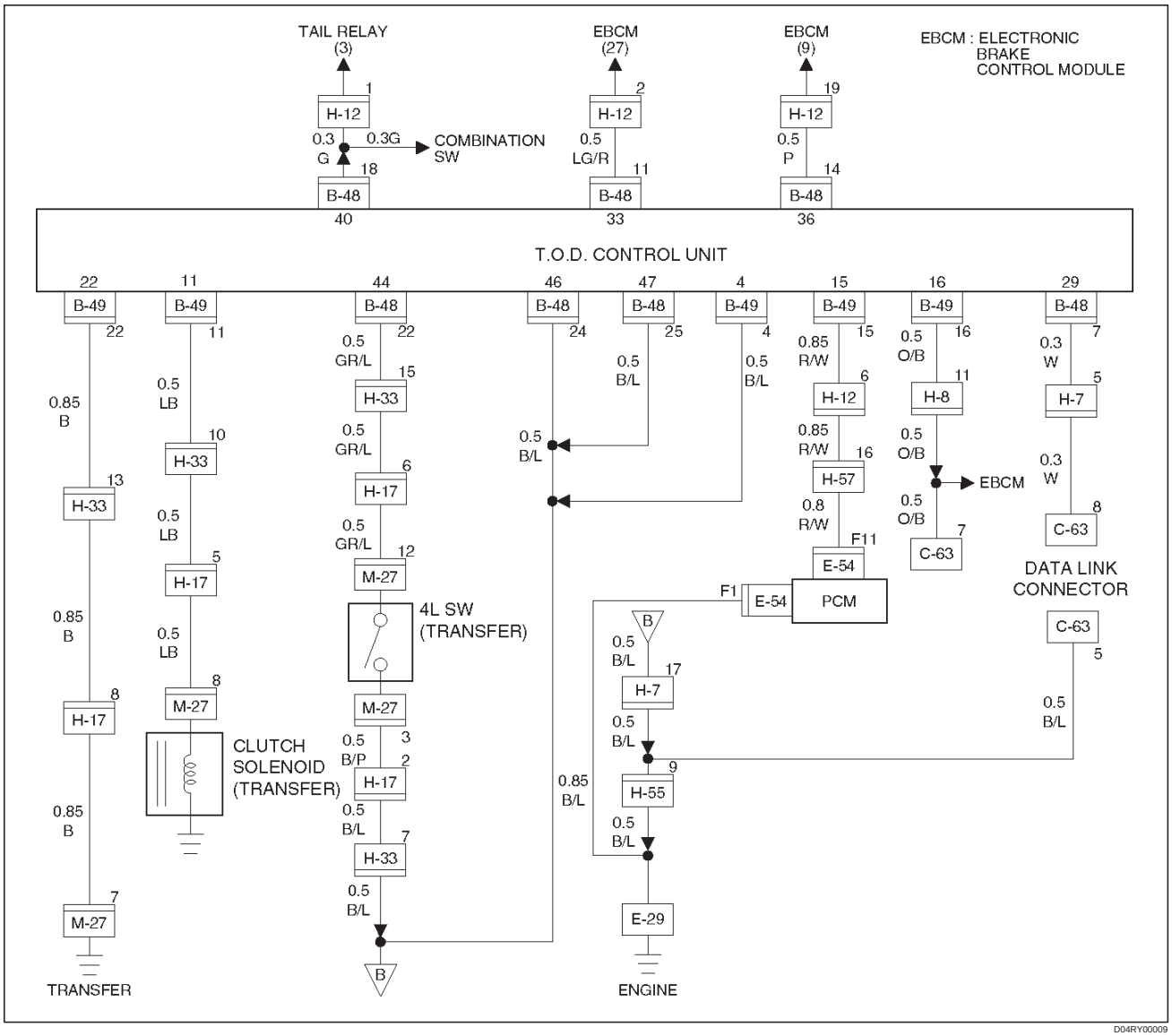

D04RY00009

Downloaded from www.Manualslib.com manuals search engine

Step	Action	Yes	No
1	Disconnect the ECU connector from ECU. Is the continuity established between terminals (B–48)7 and (B–48)24?	Go to Step 2	The ECU has failed. Replace the ECU. Go to Step 3
2	Is the self-diagnostic connector short-circuited?	Go to Step 3	Open the self-diagnostic connector. Go to Step 3
3	1. Check that all the parts are mounted. 2. Clear the trouble codes. Is this step complete?	Repeat the “Diagnosis Flow”.	Repeat to Step 3

Downloaded from www.Manualslib.com manuals search engine

Chart H	lighting switch circuit
Function of circuit	Reads in the status of lighting switch, reducing the indicator at night.
Fail condition	Even if the lighting switch is pressed on and off, brightness does not change.
Indicator lamp status	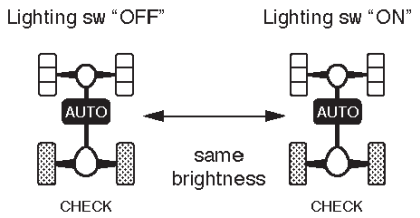
Transfer position	All position (exsample TOD mode)

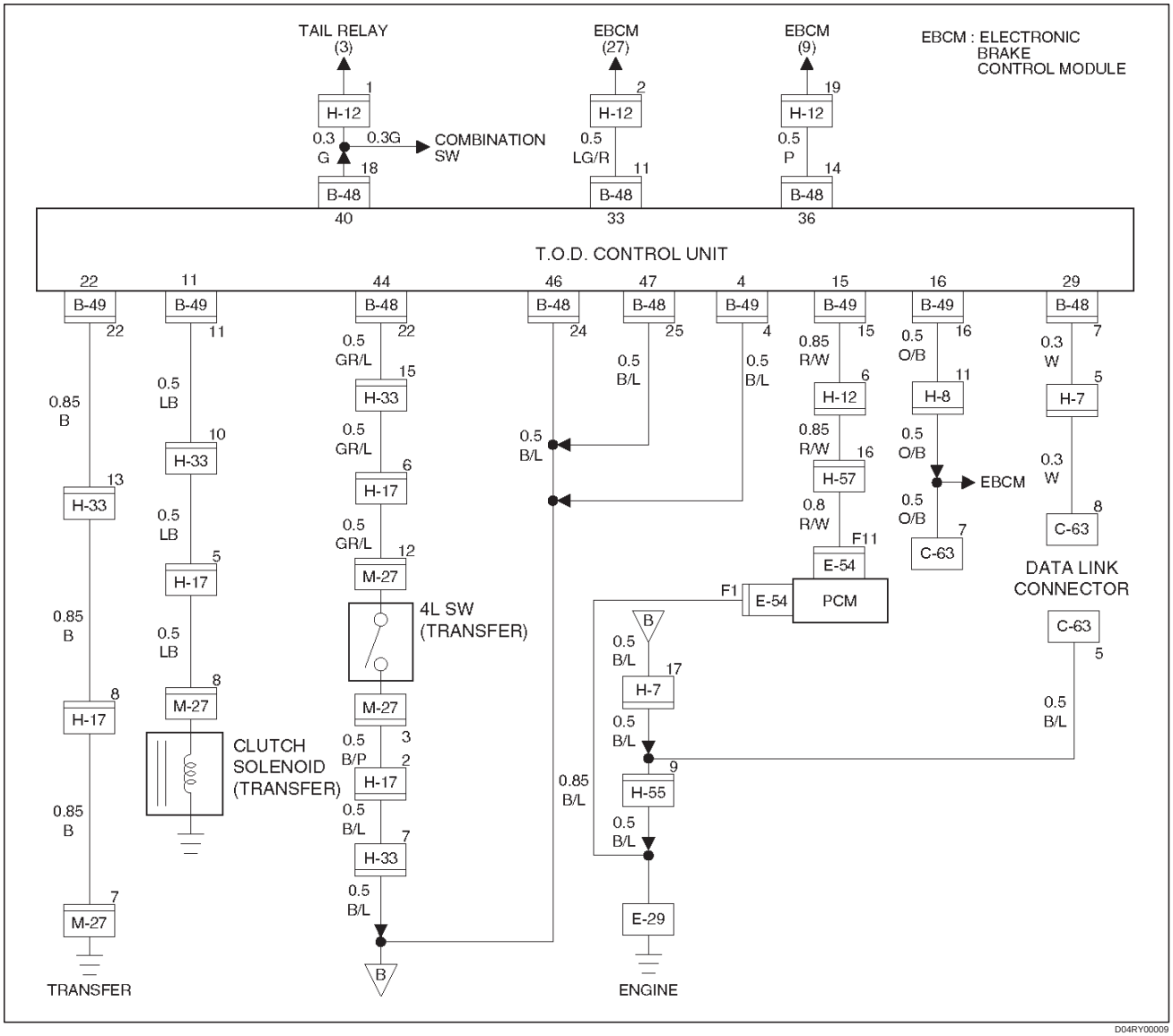

Downloaded from www.Manualslib.com manuals search engine

Step	Action	Yes	No
1	1. Disconnect ECU terminal. 2. Turn on the starter switch. Is battery voltage observed between ECU terminals (B–48)18 and (B–48)24?	Go to Step 2	Wires are broken lighting SW circuit. Repair the circuit. Go to Step 4
2	Turn lighting SW “ON”. Is 0 V observed between ECU terminal (B–48)18 and (B–48)24?	Go to Step 3	Lighting SW circuit battery short. Repair the circuit. Go to Step 4
3	Connect ECU terminal. While the lighting switch is pressed on and off, does the brightness of the indicator change?	The phenomenon is not reproduced. Refer to “Troubles intermittently observed” Go to Step 4	The ECU has failed. Replace the ECU. Go to Step 4
4	Check that all the parts are mounted. Is this step complete?	Repeat the “Diagnosis Flow”.	Return to Step 4

Downloaded from www.Manualslib.com manuals search engine

Diagnosis from Symptom

Troubles that are not indicated by the warning lamp are listed in the table below. These troubles are caused by the faults that cannot be detected by the self-diagnostic function of the control unit.
If this type of trouble is observed, interview the customer and conduct test runs to reproduce the trouble, cross-check the reported trouble with the listed phenomena, and diagnose and analyze the trouble on the item by item basis.

	Phenomena	Major cause	Corrective action
1	The tight corner braking is observed when the vehicle is subject to full steering.	● The standard tires are not used. ● The tire pressure is incorrect. ● The tires are worn inuniformity. ● The transfer or wiring is imperfect. ● The limited slip differential is failed.	Check and recondition the vehicle according to Chart 1.
2	Even if the 4WD Auto Switch is select to the 4WD position, the 4WD mode is not active, resulting in remarkable rear wheel spin.	● The transfer or wiring is imperfect. ● The shift on the fly system is failed.	Check and recondition the vehicle according to Chart 2.
3	● When the 4WD Auto Switch is select to the 4WD position, the drive resistance of the 4WD system is too large to get sufficient running speed. ● Noised drive line.	● The standard tires are not used. ● The tire pressure is incorrect. ● The tires are worn inuniformity. ● The transfer or wiring is imperfect. ● The limited slip differential is failed.	Check and recondition the vehicle according to Chart 1.
4	The shift on the fly system (front axle) generates gear noises.	● The wiring is imperfect. ● The shift on the fly system is failed.	Check and recondition the vehicle according to Chart 3.
5	The braking distance gets long even when the ABS is active.	● The wiring is imperfect. ● The ABS is failed.	Check and recondition the vehicle according to Chart 4.

Downloaded from www.Manualslib.com manuals search engine

Chart 1	The tight corner braking is observed.
Function of circuit	—
Fail condition	When the vehicle is subject to full steering in the TOD mode, the drive resistance gets large or the judder occurs. Otherwise, the above phenomenon is observed only when the brake is applied.

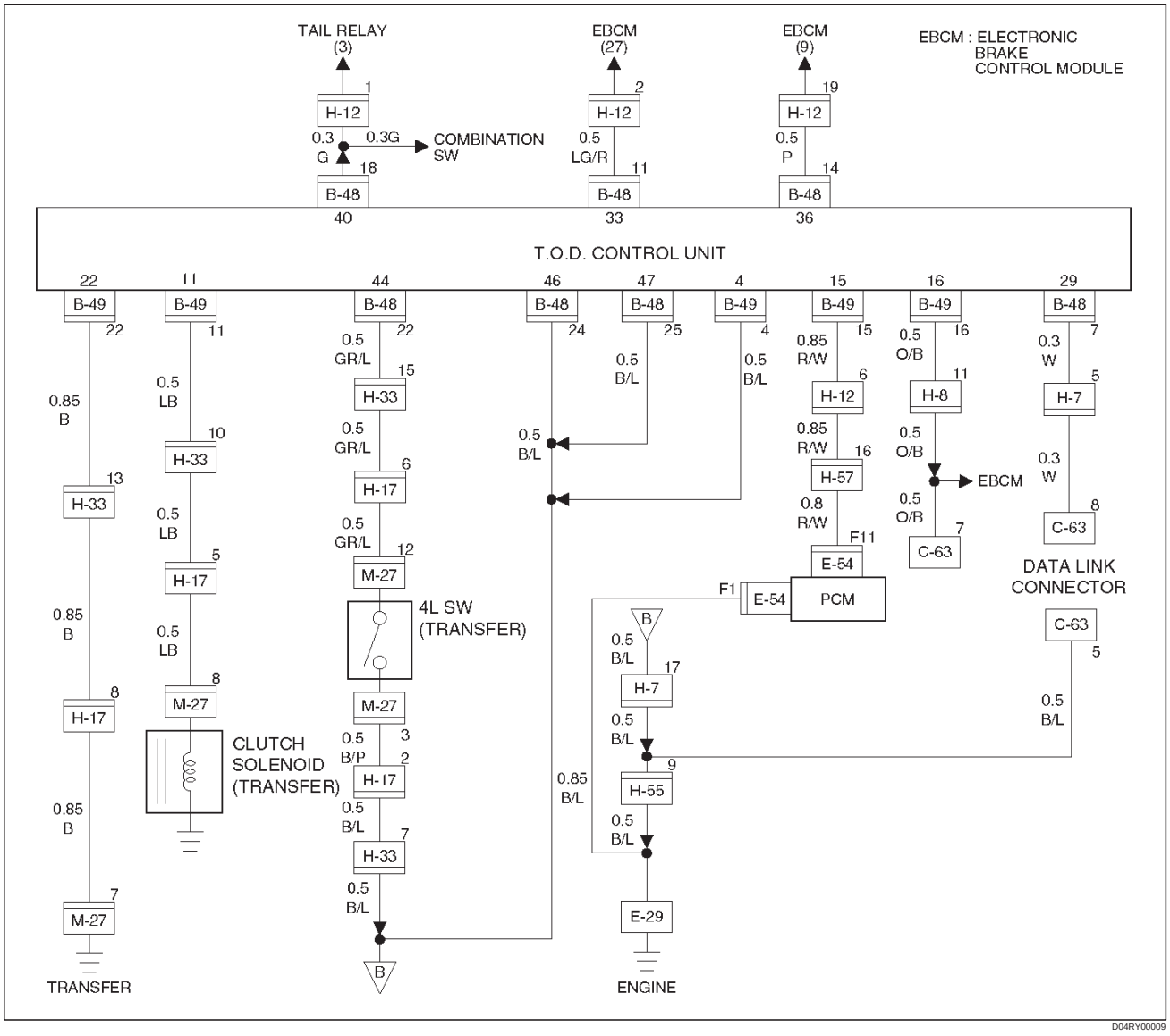

Downloaded from www.Manualslib.com manuals search engine

Step	Action	Yes	No
1	Are the front and rear tires in specified size?	Go to Step 2	Replace the tires with specified ones, and service the new tires. Go to Step 16
2	Is the tire pressure correct?	Go to Step 3	Replace the tires with specified ones, and service the new tires. Go to Step 16
3	Are the tires free from abnormal wear?	Go to Step 4	Replace the tires with specified ones, and service the new tires. Go to Step 16
4	Are different types of tires used?	Go to Step 5	Replace the tires with specified ones, and service the new tires. Go to Step 16
5	1. Start the engine. 2. Shift the transfer lever to the high (TOD) position. 3. Fully turn the steering to the left (or right) end, and select the D range and start the creep run. Does the tight corner braking occur? Is the judder with chug-chug sound observed? * Use caution on the operation.	Go to Step 6	Go to Step 11
6	1. Shift the transfer lever to the 2H position. 2. Fully turn the steering to the left (or right) end, and select the D range and start the creep run. Does the tight corner braking occur? Is the judder with chug-chug sound observed? * Use caution on the operation.	Go to Step 7	Go to Step 14
7	Is an LSD mounted to the rear differential?	Go to Step 8	Go to Step 9
8	Is the genuine LSD oil used in the rear differential?	Go to Step 9	Replace the differential oil. Go to Step 16
9	Does the engine output the power correctly?	Go to Step 10	Check the engine. Go to Step 16
10	Do the speed sensors work correctly? (Check trouble codes.)	The ECU has failed. Replace the ECU. Go to Step 16	Replace the speed sensors. Go to Step 16
11	Is the tight corner braking observed only when the brake is applied?	Go to Step 12	Conduct full steering under WOT. Go to Step 5
12	1. Turn off the starter switch. 2. Disconnect the ECU connector. Is the battery voltage observed between terminals (B–48)11 and (B–48)24?	Go to Step 13	Repair the circuit of terminal 6 (ABS IN). Go to Step 16

Downloaded from www.Manualslib.com manuals search engine

Step	Action	Yes	No
13	1. Apply the brake and fully turn the steering to the left (or right) end, and start the creep run. Does the voltage between terminals (B–49)11 and (B–49)22 range between 0.1 and 1.0V?	Repair the transfer assembly. Go to Step 16	The ECU has failed. Replace the ECU. Go to Step 16
14	1. Shift the transfer lever to the high (TOD) position. 2. Fully turn the steering to the left (or right) end, and select the D range and start the creep run. Does the voltage between terminals 11 and 22 range between 0.1 and 1.0V?	Go to Step 15	Go to Step 13
15	1. Select the 4WD Auto Switch to the 2WD position. 2. Jack up the right front wheel. Does the front tire rotate smoothly?	Repair the transfer assembly. Go to Step 16	The phenomenon is not reproduced. Refer to “Troubles intermittently observed”. Go to Step 16
16	Check that all the parts are mounted. Is this step complete?	Repeat the “Diagnosis Flow”.	Return to Step 16

*NOTE: Before checking this item, run the vehicle more than 10 meters with the steering wheel in straight position so that the 4L mechanical lock sleeve can be released certainly.

Downloaded from www.Manualslib.com manuals search engine

Chart 2	The 4WD mode is not active.
Function of circuit	—
Fail condition	The rear wheels spin in the TOD mode, so the driving torque is not transmitted to the front wheels. The indicator lamps will not show the 4L and TOD status.

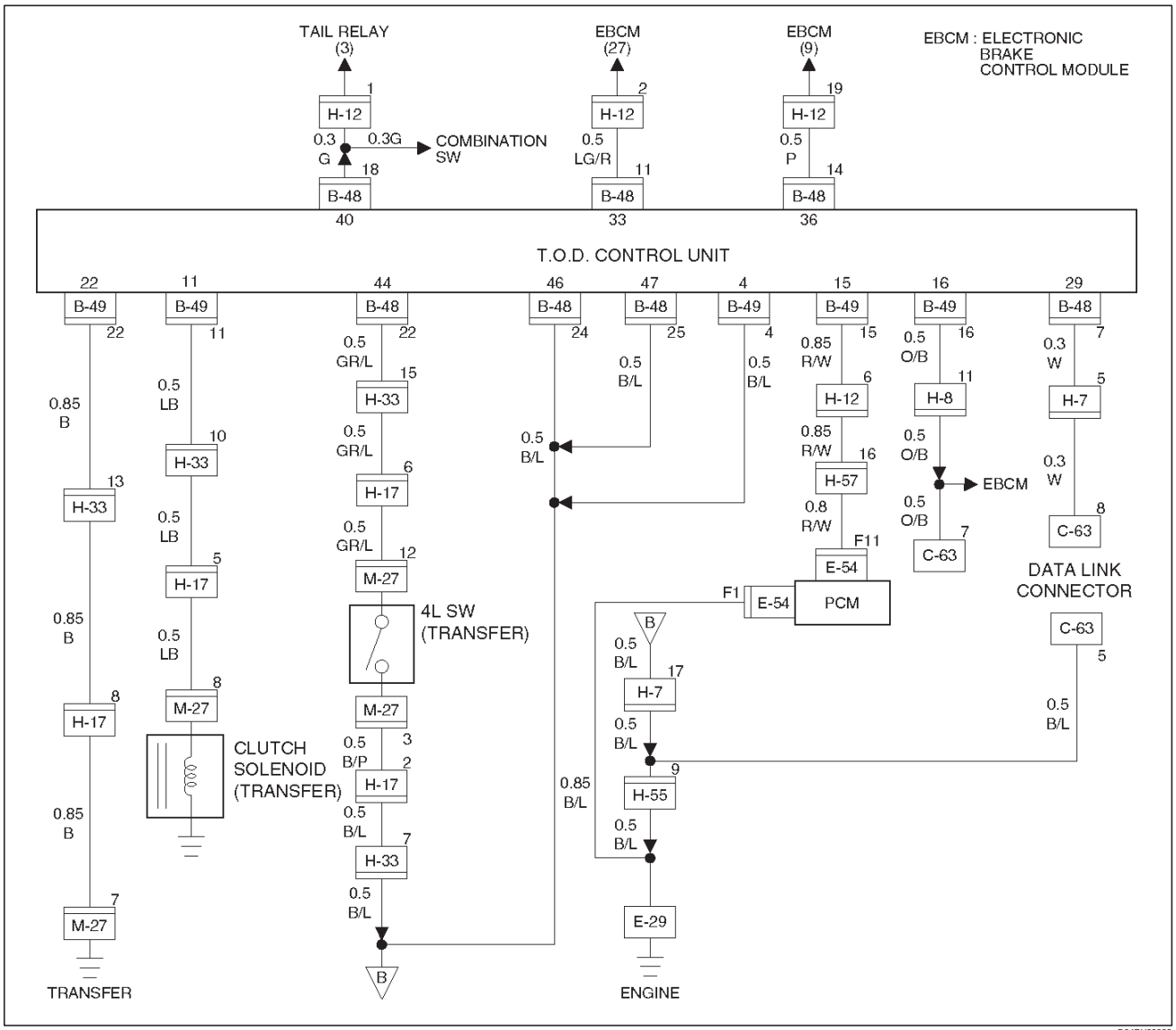

Downloaded from www.Manualslib.com manuals search engine

Step	Action	Yes	No
1	Is the trouble code 31 or 26 recorded?	Examine the trouble based on “Diagnosis from Trouble Codes”. Go to Step 7	Go to Step 2
2	Is any of the trouble codes 28, 32 and 33 recorded?	Examine the trouble based on “Diagnosis from Trouble Codes”. Go to Step 7	Go to Step 3
3	When the transfer lever is in the specified position, do the TOD indicator lamps show the correct status?	Go to Step 4	Examine the trouble based on “Trouble Diagnosis Depending on The Status of TOD Indicator”. Go to Step 7
4	Shift the transfer lever to the 4L position, fully turn the steering to the left (or right) end, and start the creep run. Does the tight corner braking occur?	Go to Step 5	Repair the transfer assembly. Go to Step 7
5	1. Shift the transfer lever to the high (TOD) position. 2. Turn on the starter switch. Does the voltage between terminals 11 and 22 indicate at least 0.1V while the throttle is completely open?	Go to Step 6	The ECU has failed. Replace the ECU. Go to Step 7
6	Does the voltage between terminals 11 and 22 indicate at least 3V while the throttle is completely closed?	The TOD clutch is worn. Repair the transfer assembly. Go to Step 7	The ECU has failed. Replace the ECU. Go to Step 7
7	Check that all the parts are mounted. Is this step complete?	Repeat the “Diagnosis Flow”.	Return to Step 7

Downloaded from www.Manualslib.com manuals search engine

Chart 3	The shift on the fly system generates gear noises. (The fuel economy is bad in the 2H mode.)
Function of circuit	—
Fail condition	When the vehicle is run in the 2H mode, the shift on the fly system generates gear noises or the front wheel gears are engaged to generate a shock.

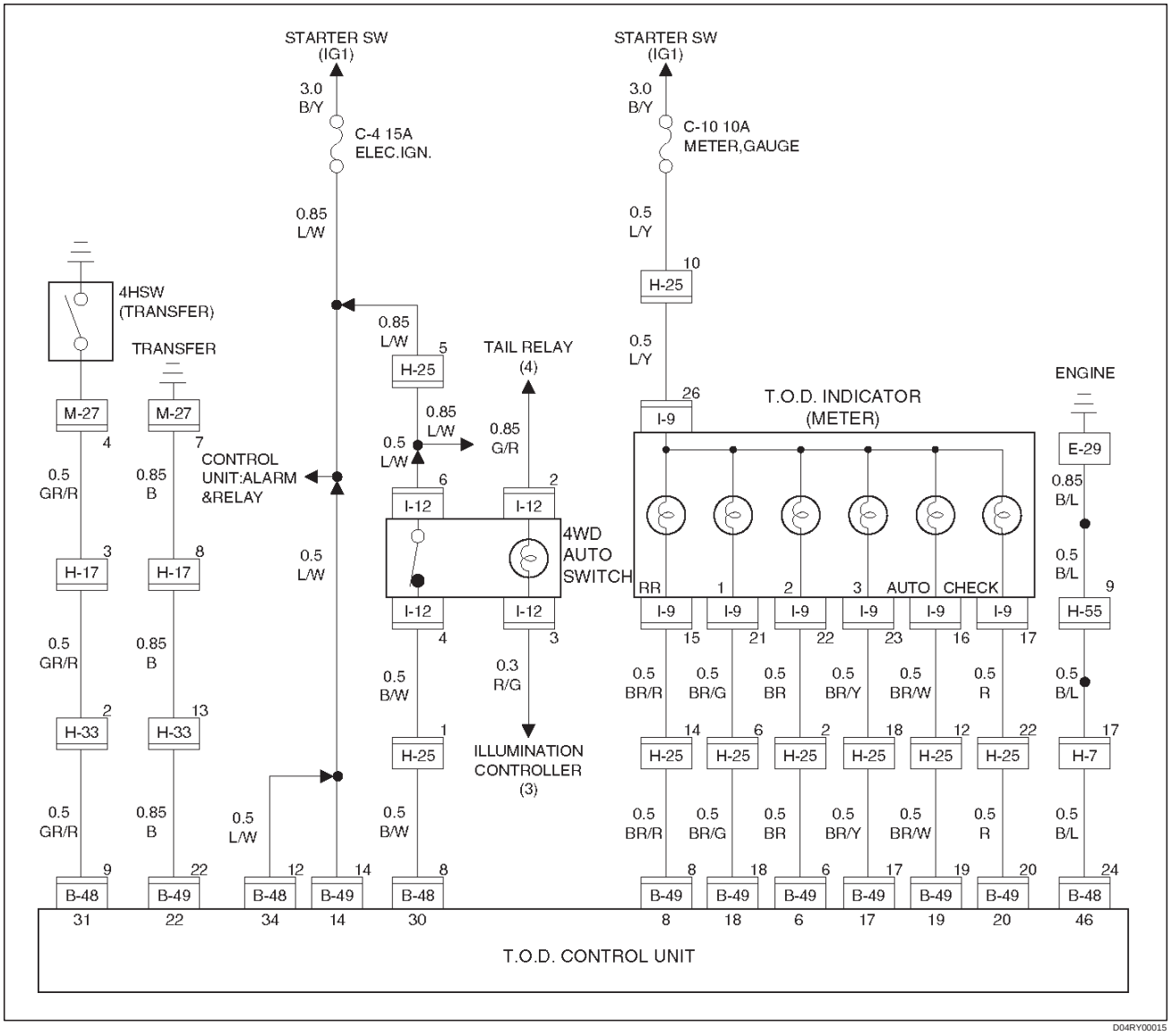

D04RY00015

Downloaded from www.Manualslib.com manuals search engine

Step	Action	Yes	No
1	Do the indicator lamps show the correct status?	Go to Step 2	Examine the trouble based on “Diagnosis from Trouble Codes”. Go to Step 2
2	Is any of the trouble codes 28, 32 and 33 recorded?	Examine the trouble based on “Diagnosis from Trouble Codes”. Go to Step 6	Go to Step 3
3	Turn on the starter switch. Is the battery voltage observed between terminals 14 and 22?	Go to Step 4	Go to Step 5
4	When the 4WD Auto Switch is select to the 2WD position, are the front axle gears correctly disengaged (and when the left front tire is jacked up and turned, is the front propeller shaft standstill)?	The phenomenon is not reproduced. Refer to “Troubles intermittently observed”. Go to Step 6	The shift on the fly system is failed (refer to Section 4B1 “Driveline Control System”). Go to Step 6
5	Does the battery voltage maintain the correct level?	Repair the battery circuit. Go to Step 6	Repair the battery and charging system. Go to Step 6
6	Check that all the parts are mounted. Is this step complete?	Repeat the “Diagnosis Flow”.	Return to Step 6

Downloaded from www.Manualslib.com manuals search engine

Chart 4	The braking distance gets long even when the ABS is active.
Function of circuit	—
Fail condition	Enough deceleration is not obtained and the braking distance gets long even when the ABS is active in the 2H mode.

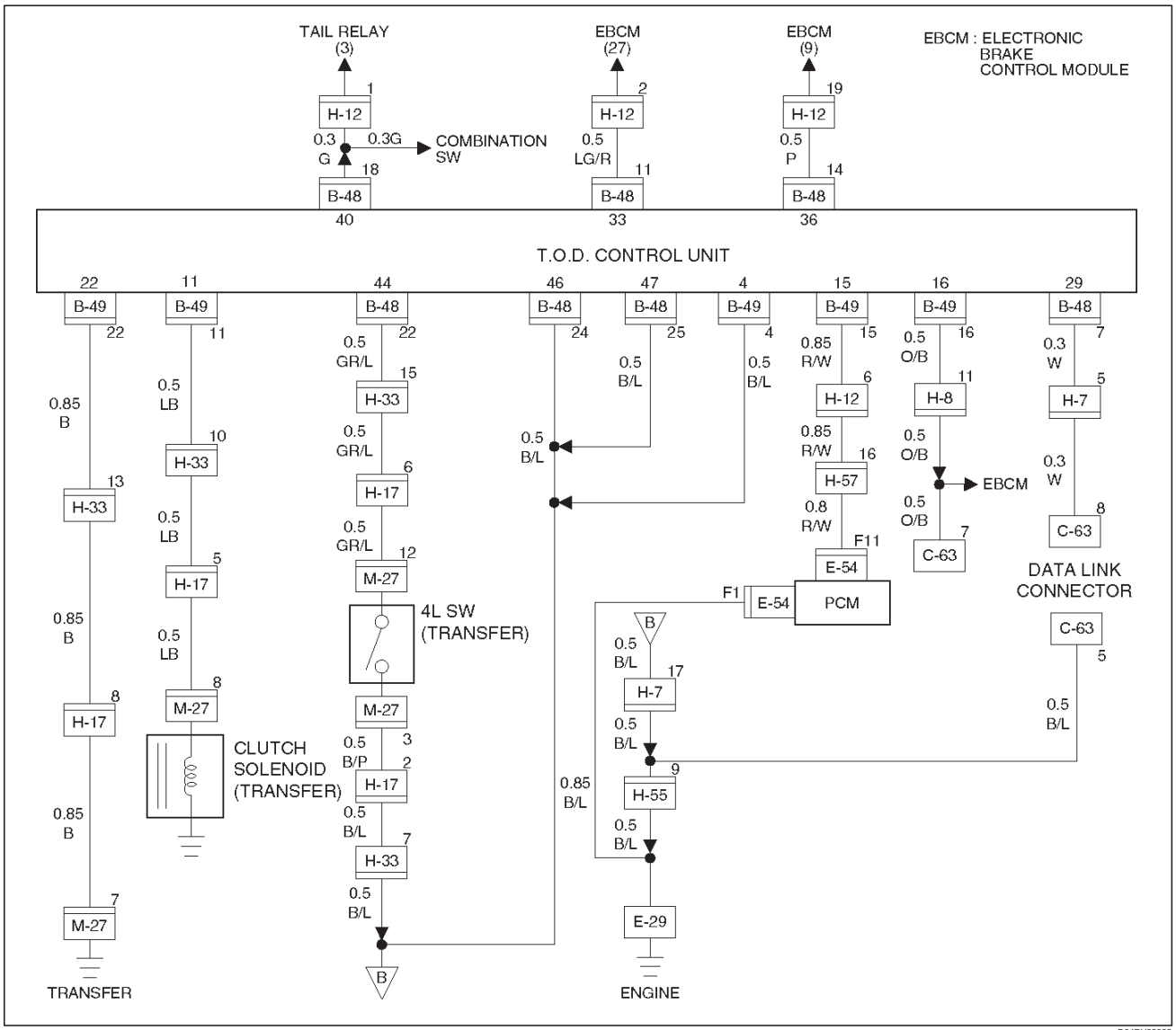

Downloaded from www.Manualslib.com manuals search engine

Step	Action	Yes	No
1	Are the brake and ABS systems healthy?	Go to Step 2	Repair the brake and ABS. Go to Step 4
2	Turn on the starter switch. Is the battery voltage observed between terminals 14 and 22?	Go to Step 3	Repair the battery system. Go to Step 4
3	1. Select the 4WD SW to the 2WD position. 2. The voltage between terminals 36 and 46 range between 7.5 and 16V (0.12 seconds make a cycle) 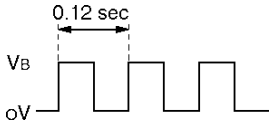 Does the voltage within the range specified?	Examine the trouble based on “Diagnosis from Trouble Codes". Go to Step 4	The ECU has failed. Replace the ECU. Go to Step 4
4	Check that all the parts are mounted. Is this step complete?	Repeat the “Diagnosis Flow".	Return to Step 4

Downloaded from www.Manualslib.com manuals search engine

TROOPER

DRIVELINE/AXLE

DRIVE SHAFT SYSTEM

CONTENTS

Service Precaution 4C–2
General Description 4C–2
Diagnosis 4C–3
Front Hub and Disc (2WD Model) 4C–4
Disassembled View 4C–4
Disassembly 4C–4
Inspection and Repair 4C–6
Reassembly 4C–6
Main Data and Specifications 4C–9
Special Tools 4C–10
Front Hub and Disc (4WD Model) 4C–11
Disassembled View 4C–11
Disassembly 4C–11
Inspection and Repair 4C–12
Reassembly 4C–12
Main Data and Specifications 4C–16
Special Tools 4C–17
Front Drive Shaft Joint 4C–18
Front Drive Shaft Joints Replacement 4C–18
Front Axle Drive Shaft 4C–19
Front Axle Drive Shaft and Associated Parts 4C–19
Disassembly 4C–20
Inspection and Repair 4C–21
Bushing Replacement 4C–21
Reassembly 4C–22
Shift On The Fly System 4C–24
Shift On The Fly System and Associated Parts 4C–24
Disassembly 4C–24
Inspection and Repair 4C–26
Main Data and Specifications 4C–31
Special Tools 4C–32
Front Propeller Shaft 4C–33
General Description 4C–33
Front Propeller Shaft and Associated Parts 4C–34
Removal 4C–34
Installation 4C–35
Disassembly (Except TOD 4×4) 4C–36
Universal Joint Disassembly 4C–37
Inspection and Repair 4C–38
Universal Joint Reassembly 4C–41
Reassembly (Except TOD 4×4) 4C–42
Main Data and Specifications 4C–43
Rear Propeller Shaft 4C–44
General Description 4C–44
Rear Propeller Shaft and Associated Parts 4C–44
Removal 4C–44
Installation 4C–45
Disassembly 4C–46
Universal Joint Disassembly 4C–47
Inspection and Repair 4C–48
Universal Joint Reassembly 4C–49
Reassembly 4C–50
Main Data and Specifications 4C–51

Downloaded from www.Manualslib.com manuals search engine

Service Precaution

WARNING: THIS VEHICLE HAS A SUPPLEMENTAL RESTRAINT SYSTEM(SRS). REFER TO THE SRS COMPONENT AND WIRING LOCATION VIEW IN ORDER TO DETERMINE WHETHER YOU ARE PERFORMING SERVICE ON OR NEAR THE SRS COMPONENTS OR THE SRS WIRING. WHEN YOU ARE PERFORMING SERVICE ON OR NEAR THE SRS COMPONENTS OR THE SRS WIRING, REFER TO THE SRS SERVICE INFORMATION. FAILURE TO FOLLOW WARNINGS COULD RESULT IN POSSIBLE AIR BAG DEPLOYMENT, PERSONAL INJURY, OR OTHERWISE UNNEEDED SRS SYSTEM REPAIRS.

CAUTION: Always use the correct fastener in the proper location. When you replace a fastener, use ONLY the exact part number for that application. ISUZU will call out those fasteners that require a replacement after removal. ISUZU will also call out the fasteners that require thread lockers or thread sealant. UNLESS OTHERWISE SPECIFIED , do not use supplemental coatings (Paints, greases, or other corrosion inhibitors) on threaded fasteners or fastener joint interfaces. Generally, such coatings adversely affect the fastener torque and the joint clamping force, and may damage the fastener. When you install fasteners, use the correct tightening sequence and specifications. Following these instructions can help you avoid damage to parts and systems.

General Description

This publication contains essential removal, installation, adjustment and maintenance procedures.
The front axle utilizes a central disconnect type front axle/transfer case system.
The drive axles are completely flexible assemblies, consisting of inner and outer constant velocity (CV) drive shaft joints connected by an axle shaft.
For description of front propeller shaft and universal joint, refer to Front Propeller Shaft in this section.

Downloaded from www.Manualslib.com manuals search engine

Diagnosis

Condition	Possible cause	Correction
Oil Leak At Front Axle	Worn or defective oil seal.	Replace the oil seal.
	Front axle housing cracked.	Repair or replace.
Oil Leak At Pinion Shaft	Too much gear oil.	Correct the oil level.
	Oil seal worn or defective.	Replace the oil seal.
	Pinion flange loose or damaged.	Tighten or replace.
Noises In Front Axle Drive Shaft Joint	Broken or worn drive shaft joints and bellows (BJ and DOJ).	Replace the drive shaft joints and bellows.
“Clank” When Accelerating From “Coast”	Loose drive shaft joint to output shaft bolts.	Tighten.
	Damaged inner drive shaft joint.	Replace.
Shudder or Vibration During Acceleration	Excessive drive shaft joint angle.	Repair.
	Worn or damaged drive shaft joints.	Replace.
	Sticking spider assembly (inner drive shaft joint).	Lubricate or replace.
	Sticking joint assembly (outer drive shaft joint).	Lubricate or replace.
Vibration At Highway Speeds	Out of balance or out of round tires.	Balance or replace.
	Front end out of alignment.	Align.
Noises in Front Axle	Insufficient gear oil.	Replenish the gear oil.
	Wrong or poor grade gear oil.	Replace the gear oil.
	Drive pinion to ring gear backlash incorrect.	Adjust the backlash.
	Worn or chipped ring gear, pinion gear or side gear.	Replace the ring gear, pinion gear or side gear.
	Pinion shaft bearing worn.	Replace the pinion shaft bearing.
	Wheel bearing worn.	Replace the wheel bearing.
	Differential bearing loose or worn.	Tighten or replace.
Wanders and Pulls	Wheel bearing preload too tight.	Adjust the wheel bearing preload.
	Incorrect front alignment.	Adjust the front alignment.
	Steering linkage loose or worn.	Tighten or replace.
	Steering gear out of adjustment.	Adjust or replace the steering gear.
	Tire worn or improperly inflated.	Adjust the inflation or replace.
	Front or rear suspension parts loose or broken.	Tighten or replace.
Front Wheel Shimmy	Wheel bearing worn or improperly adjusted.	Adjust or replace.
	Incorrect front alignment.	Adjust the front alignment.
	Worn ball joint or bush.	Replace the ball joint or bush.
	Steering linkage loose or worn.	Tighten or replace.
	Steering gear out of adjustment.	Tighten or replace.
	Tire worn or improperly inflated.	Replace or adjust the inflation.
	Shock absorber worn.	Replace the shock absorber.

Downloaded from www.Manualslib.com manuals search engine

Front Hub and Disc (2WD Model)

Disassembled View

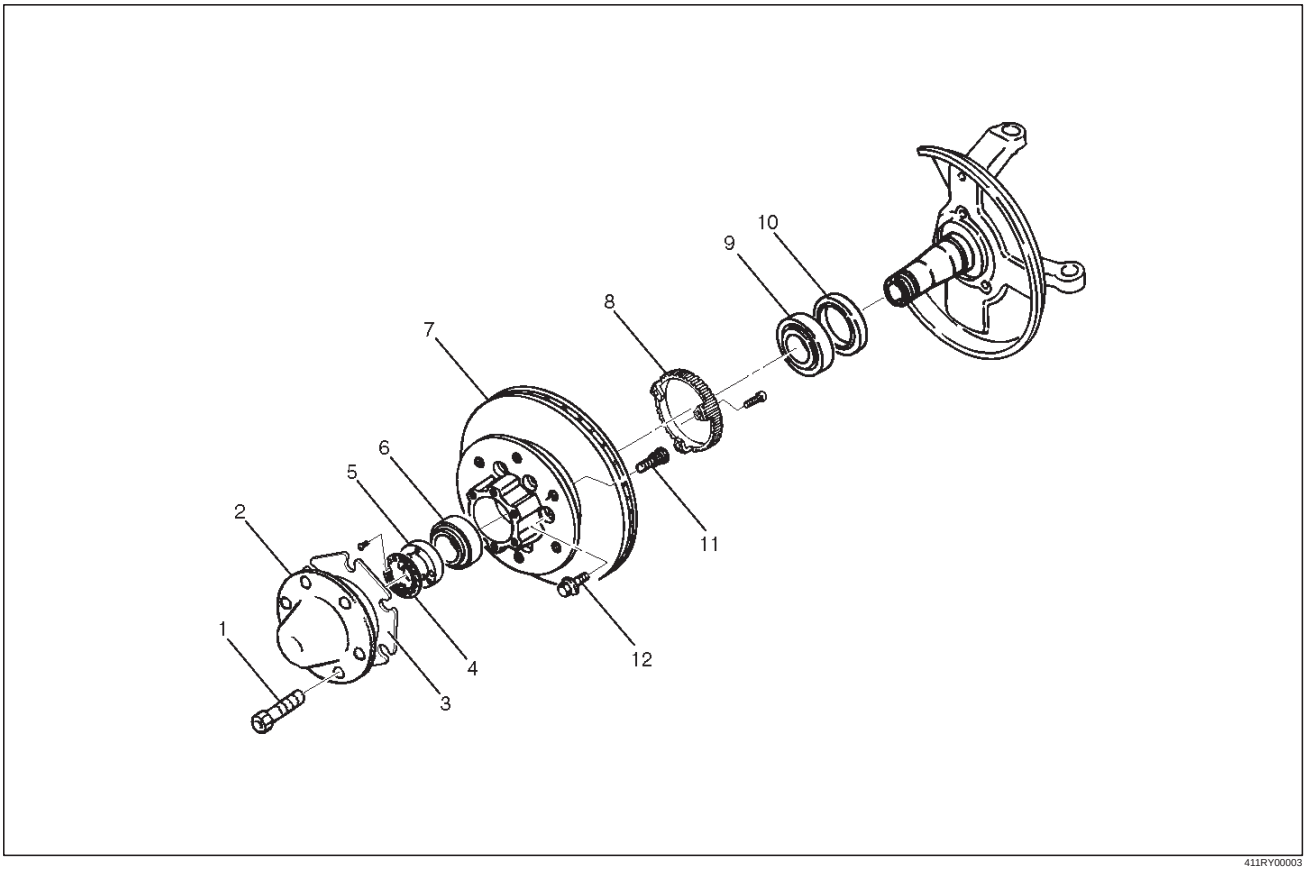

411RY00003

Legend

(1) Bolt
(2) Cover and Gasket
(3) Packing
(4) Lock Washer
(5) Hub Nut
(6) Outer Bearing
(7) Hub and Disc Assembly
(8) ABS Sensor Ring
(9) Inner Bearing
(10) Oil Seal
(11) Bolt
(12) Wheel Pin

Disassembly

1. Before disassembly, jack up the front of vehicle and support frame with jack stands.
2. Remove the two bolts from the rear side of the knuckle arm, then remove the brake caliper, with the brake hose attached.
   Use a wire to attach the brake caliper to the upper link. Refer to Disk Brakes in Brake section.

Downloaded from www.Manualslib.com manuals search engine

3. Remove cover bolt.
4. Remove cover and gasket.
5. Remove lock washer.
6. Remove hub nut, using front hub nut wrench J–36827.

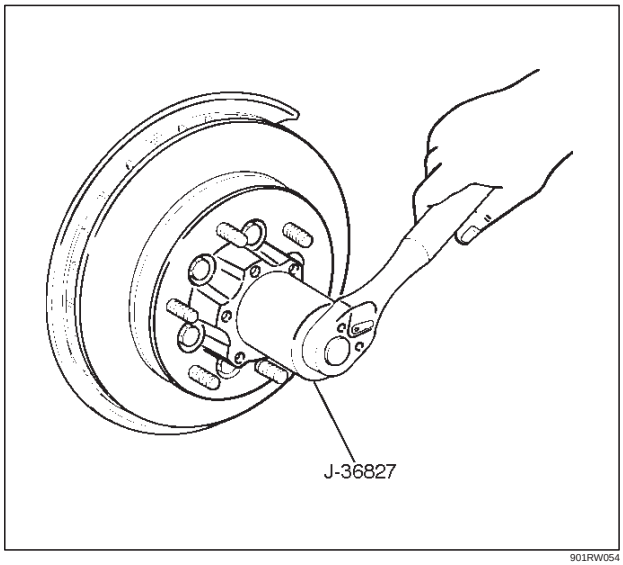

901RW054

7. Remove outer bearing.
8. Remove oil seal.
9. Remove inner bearing.
10. Use a brass bar to remove the outer bearing outer race(1), oil seal, inner bearing and inner bearing outer race(2) from the hub.

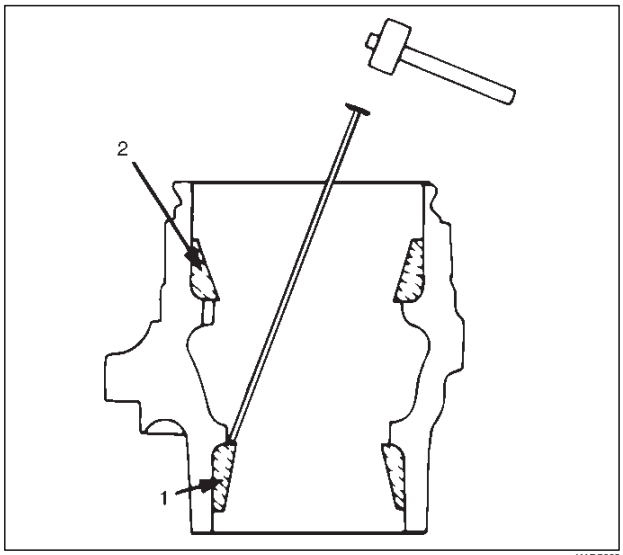

411RS002

11. Remove bolt.
12. If necessary, replace the wheel pin in the following manner.
    - Scribe mark(1) on hub to disc before disassembly to insure proper assembly.

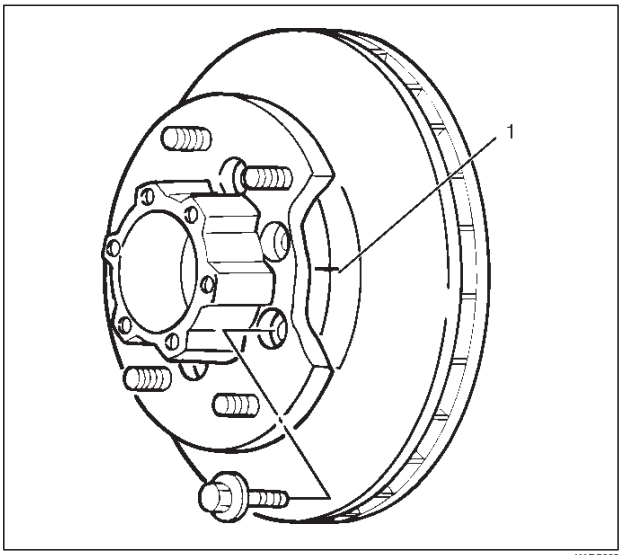

411RS003

- Clamp hub and disc assembly in vise, using protective pads. Remove six(6) disc-to-hub retaining bolts.

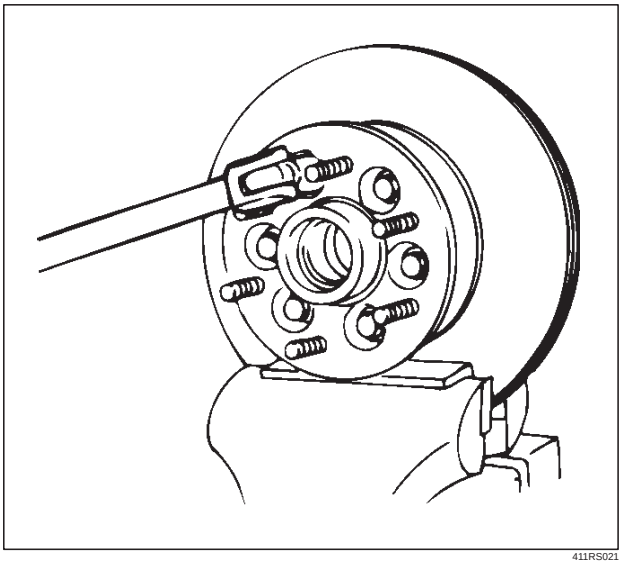

411RS021

Downloaded from www.Manualslib.com manuals search engine

- Place hub on a suitable work surface and remove wheel studs, as required, using a hammer.

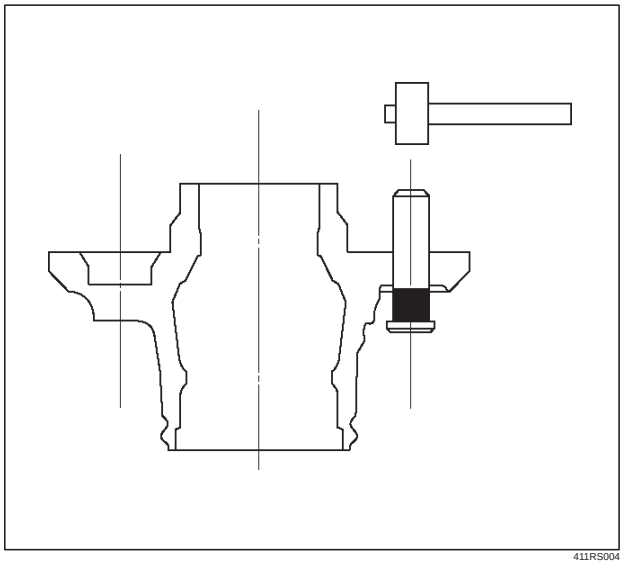

Inspection and Repair

Check the following parts for wear, damage or other abnormal conditions.

- Hub
- Hub bearing
- Bearing outer race
- Disc
- Oil seal

Reassembly

1. Install wheel pin.
   - Place hub on a wood workbench or a block of wood approx. 6” by 6” to protect the wheel stud ends and threads.
   - Install wheel stud, using a hammer.

NOTE: Be sure wheel stud is started squarely and seats completely.

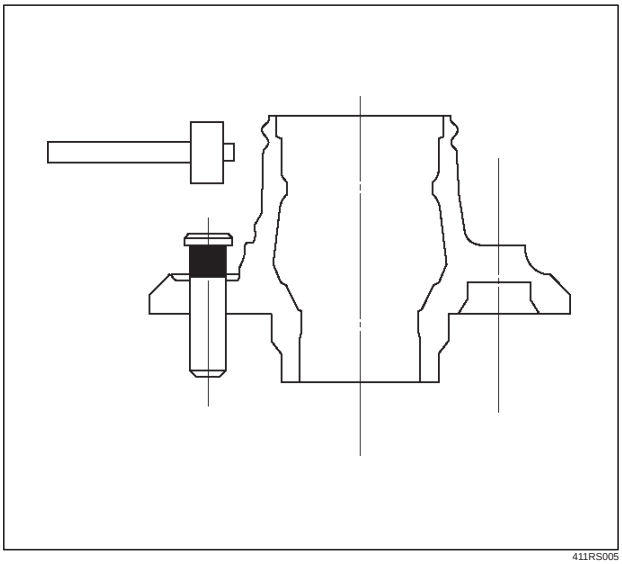

2. Align index marks(1) and install hub to disc.

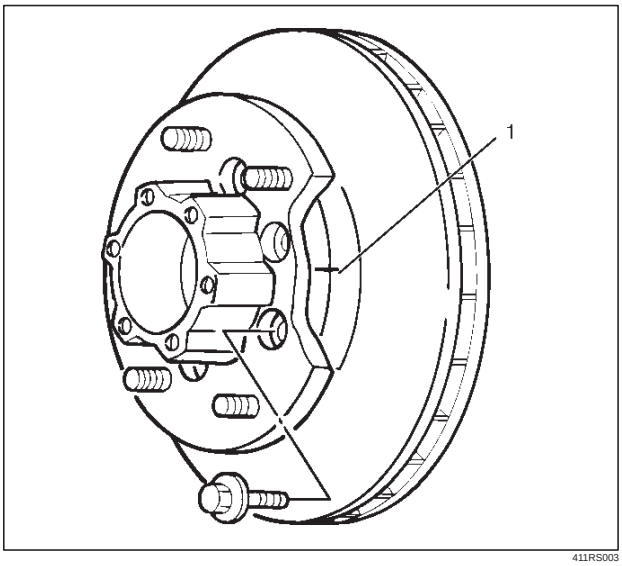

Downloaded from www.Manualslib.com manuals search engine

3. Install bolt.
   Tighten the bolts to the specified torque.

   Torque: 103 N·m (76 lb ft)

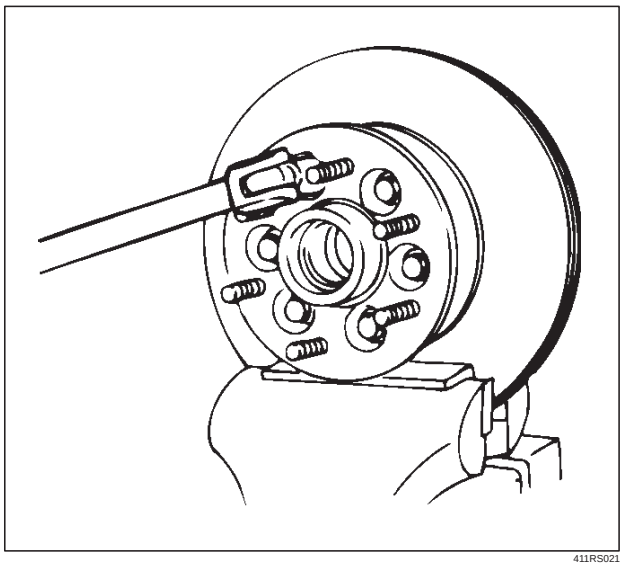

411RS021

4. Install outer bearing.
   Install the outer race by driving it into the hub by using installer J–36828 and grip J-8092.

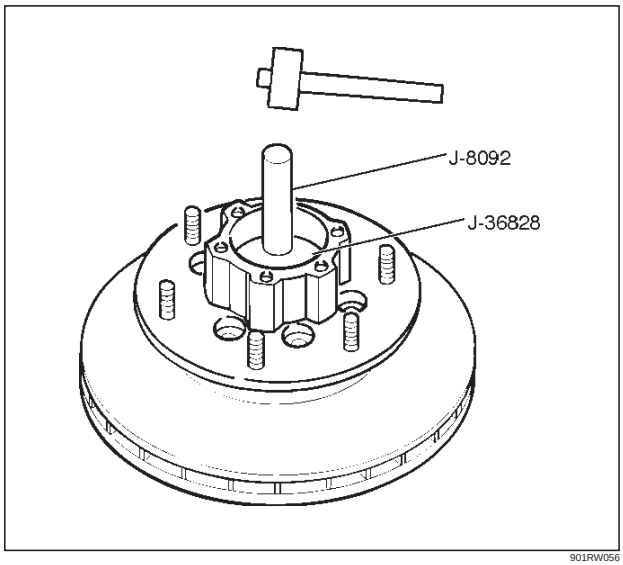

901RW056

5. Install inner bearing.
   Install the outer race by driving it into the hub by using installer J–36829 and grip J–8092.

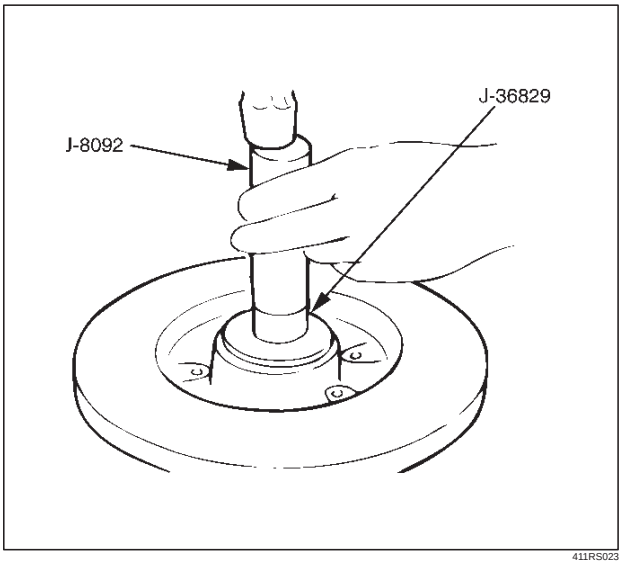

411RS023

6. Install oil seal by using installer J–36830 and grip J–8092.
   Apply Multipurpose grease NLGI No. 2 or equivalent to the lip portion.

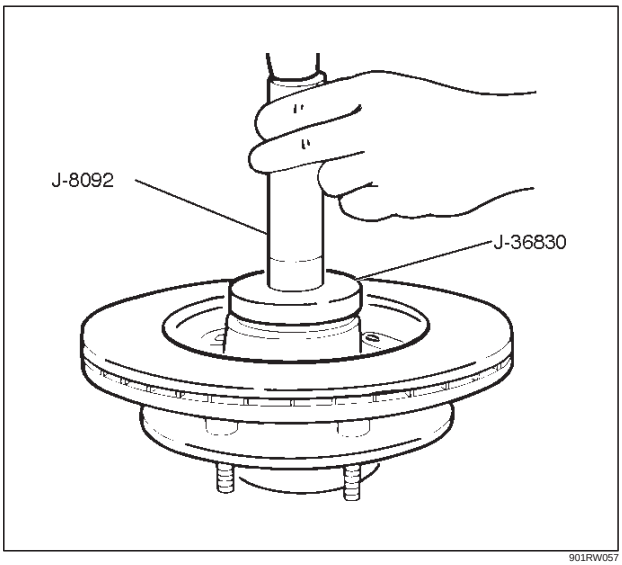

901RW057

Downloaded from www.Manualslib.com manuals search engine

7. Apply Multipurpose grease NLGI No.2 in the hub and bearing.

Hub	35 g (1.23 oz)
Outer bearing	10 g (0.35 oz)
Inner bearing	15 g (0.53 oz)

8. Install hub nut by using wrench J–36827.
   Turn the place where there is a chamfer in the tapped hole to the outer side, and attach the nut.

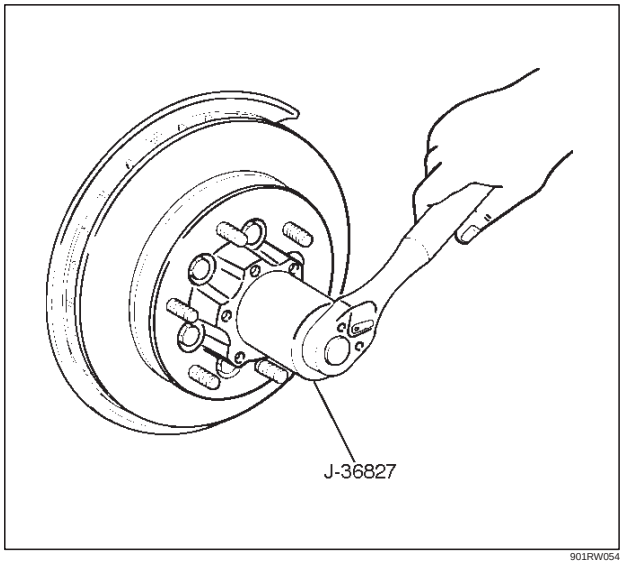

901RW054

Preload Adjustment

1. Tighten the hub nut to 29.4 N·m (21.7 lb ft), then loosen the nut to the full.
2. Tighten the hub nut to the value given below, using a spring scale on the wheel pin.

Bearing Preload

New bearing and New oil seal	19.6 – 24.5 N (4.4 – 5.5 lb)
Used bearing and New oil seal	11.8 – 17.7 N (2.6 – 4.0 lb)

If the measured bearing preload is outside the specifications, adjust it by loosening or tightening the bearing nut.

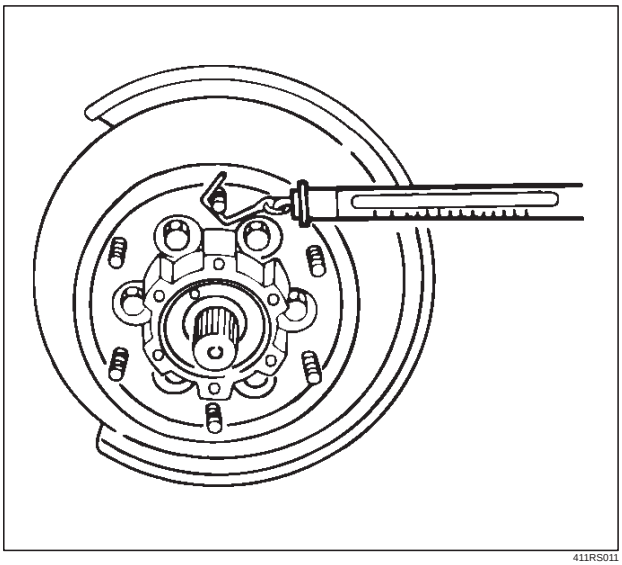

411RS011

9. Install lock washer.
   - Turn the side with larger diameter of the tapered bore to the vehicle outer side, then attach the washer.
     If the bolt holes in the lock plate are not aligned with the corresponding holes in the nut, reverse the lock plate. If the bolt holes are still out of alignment, turn in the nut just enough to obtain alignment. Screw is to be fastened tightly so its head may come lower than the surface of the washer.

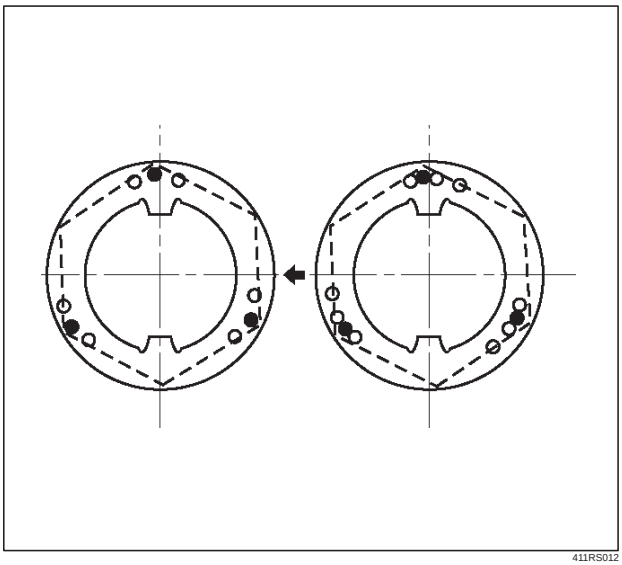

411RS012

10. Install the paking.
11. Install cover and tighten the cover bolt.
12. Install brake caliper and tighten fixing bolt.

Downloaded from www.Manualslib.com manuals search engine

Main Data and Specifications

Torque Specifications

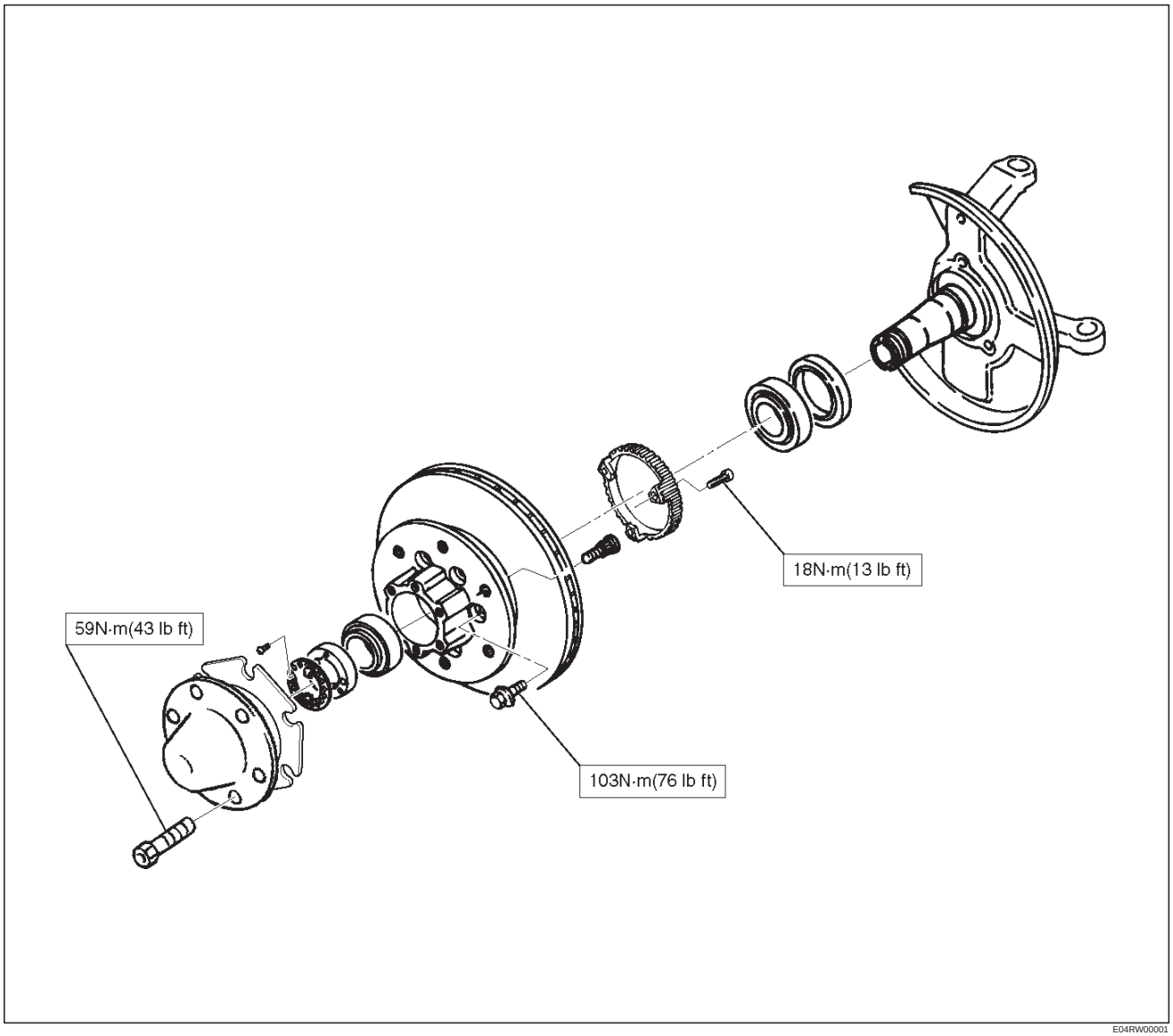

E04RW00001

Downloaded from www.Manualslib.com manuals search engine

Special Tools

ILLUSTRATION	**TOOL NO.** TOOL NAME
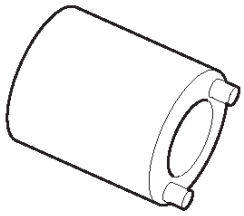 901RS246	**J–36827** Wrench; Hub nut
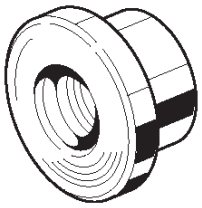 901RS247	**J–36829** Installer; Inner bearing
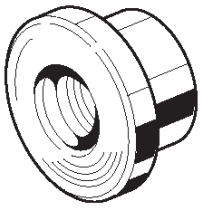 901RS248	**J–36828** Installer; Outer bearing
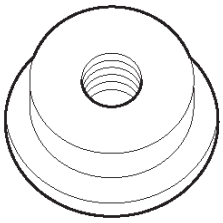 901RS249	**J–36830** Installer; Oil seal

Downloaded from www.Manualslib.com manuals search engine

Front Hub and Disc (4WD Model)

Disassembled View

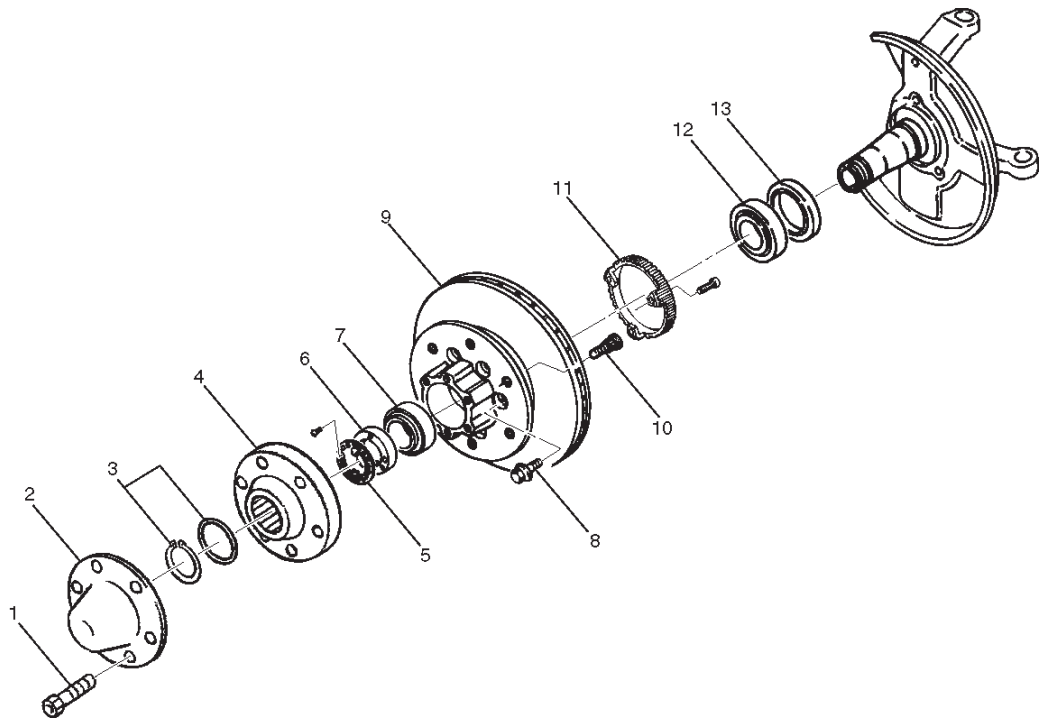

411RW001

Legend

(1) Bolt
(2) Cap
(3) Snap Ring and Shim
(4) Hub Flange
(5) Lock Washer and Lock Screw
(6) Hub Nut
(7) Outer Bearing
(8) Bolt
(9) Hub and Disc Assembly
(10) Wheel Pin
(11) ABS Sensor Ring
(12) Inner Bearing
(13) Oil Seal

Disassembly

1. Before disassembly, select the 2WD position with the 4WD switch.
2. Jack up the front of vehicle and support frame with jack stands.
3. Remove the disc brake caliper assembly and hang it on the frame with wires. Refer to Disk Brakes in Brake section.
4. Remove Bolt.
5. Remove cap.
6. Remove snap ring and shim.
7. Remove hub flange.

Downloaded from www.Manualslib.com manuals search engine

8. Remove lock washer and lock screw.
9. Use wrench J–36827, remove hub nut.

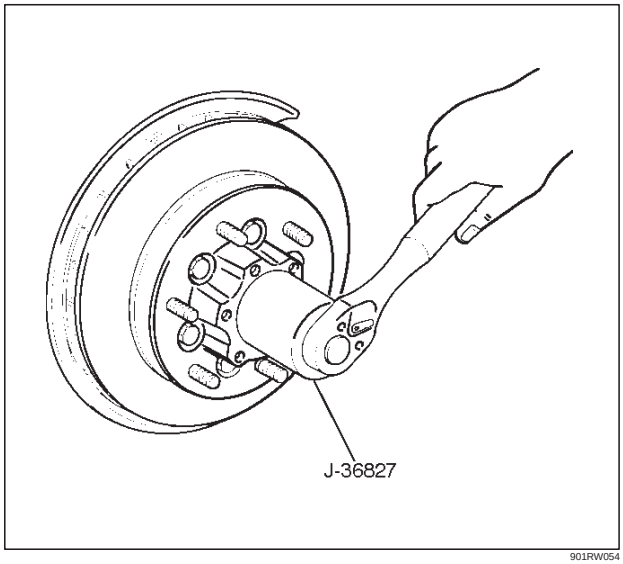

901RW054

10. Remove hub and disc assembly.
11. Remove ABS sensor ring.
12. Remove outer bearing.
13. Remove oil seal.
14. Remove inner bearing.
15. Remove bolt , if necessary, replace the wheel pin in the following manner.
    - Apply a scribe mark(1) to disc to hub.
    - Clamp the hub and disc assembly in a vise, using protective pads. Remove the 6 disc–to–hub retaining bolts.

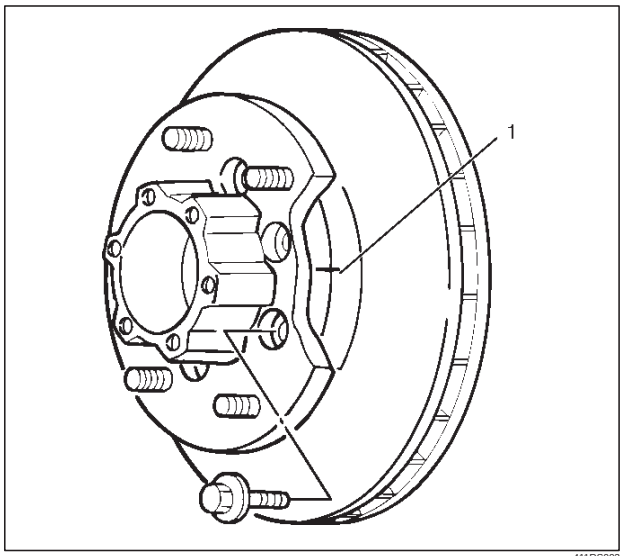

411RS003

- Place hub on a suitable work surface and remove the studs by using a hammer.

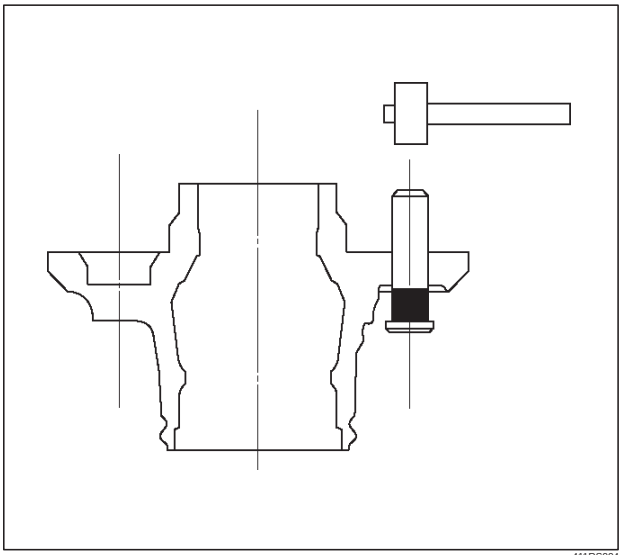

411RS004

Inspection and Repair

Make necessary correction or parts replacement if wear, damage, corrosion or any other abnormal condition are found through inspection.
Check the following parts.

- Hub
- Hub bearing oil seal
- Knuckle spindle
- Disc
- Caliper
- Shift on the fly system parts (Cap, Hub flange, Shim, Snap ring)
- ABS sensor ring

For inspection and servicing of disc caliper and related parts, refer to Disc Brakes in Brake section.

Reassembly

1. Install wheel pin.
    - Place the hub on a wood workbench or a block of wood approx. 6” by 6” to protect the wheel stud ends and threads.

Downloaded from www.Manualslib.com manuals search engine

- Insert a wheel stud using a hammer.

  Be sure the wheel stud is started squarely and seats completely.

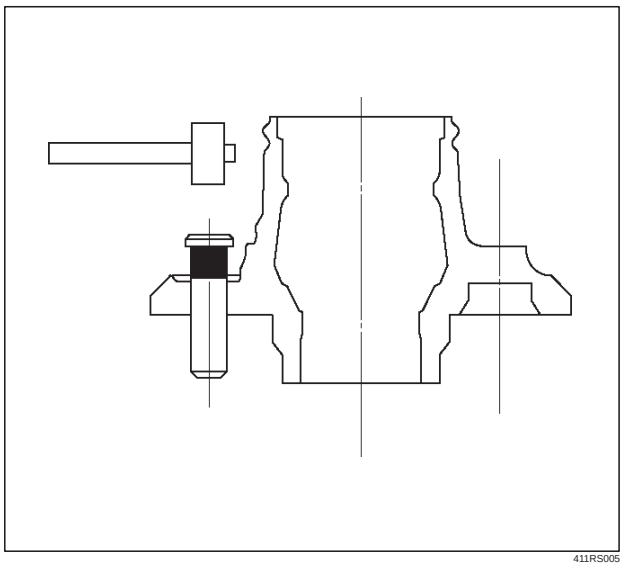

411RS005

2. Align scribe marks(1) and attach the hub to the disc, then tighten the bolts to the specified torque.

Torque: 103 N·m (76 lb ft)

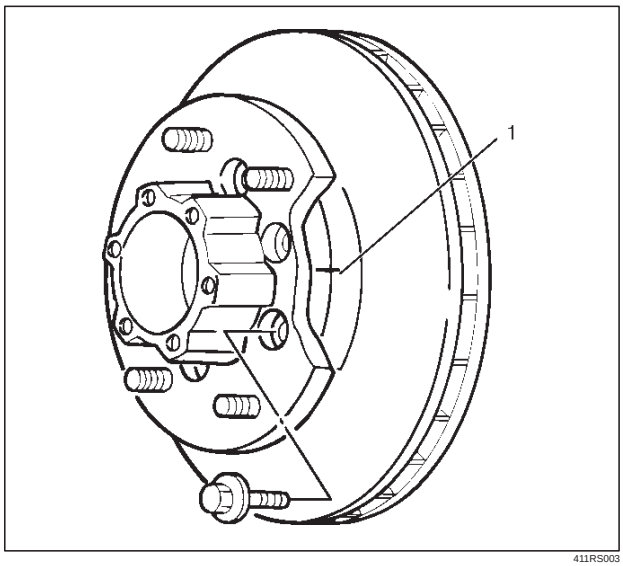

411RS003

3. Use installer J–36829 and grip J–8092, then install the inner bearing by driving it into the hub.

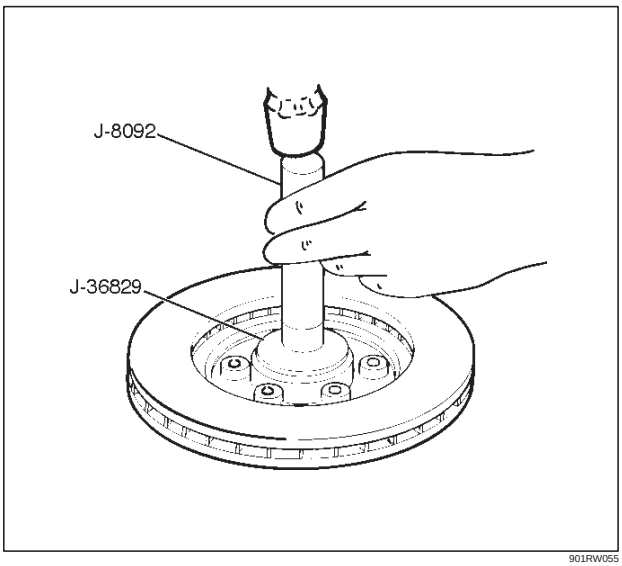

901RW055

4. Use installer J–36828 and grip J–8092 then install the outer bearing by driving it into the hub.

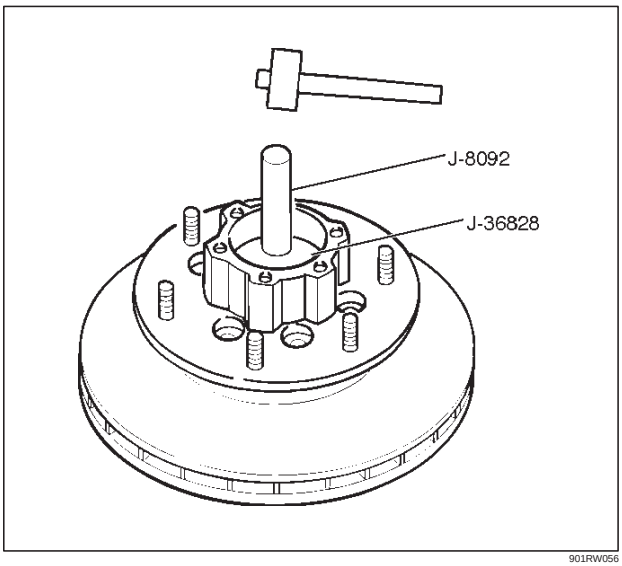

901RW056

Downloaded from www.Manualslib.com manuals search engine

5. Apply grease (NLGI No.2 or equivalent) to the lip portion, then install oil seal by using installer J–36830 and grip J–8092.

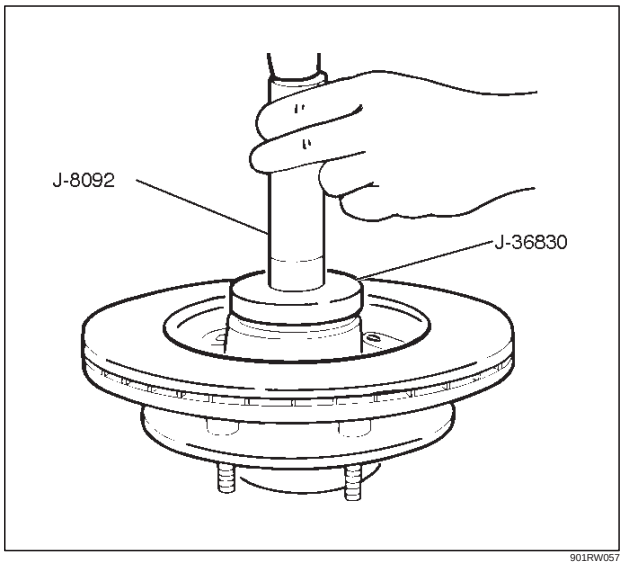

901RW057

6. Install ABS sensor ring, then tighten the bolts to the specified torque.

Torque: 18 N·m (13 lb ft)

7. Install hub and disc assembly.
   - Apply grease in the hub.
   - Apply wheel bearing type grease NLGI No. 2 or equivalent to the outer and inner bearing.

Grease Amount

- **Hub: 35 g (1.23 oz)**
- **Outer bearing: 10 g (0.35 oz)**
- **Inner bearing: 15 g (0.53 oz)**

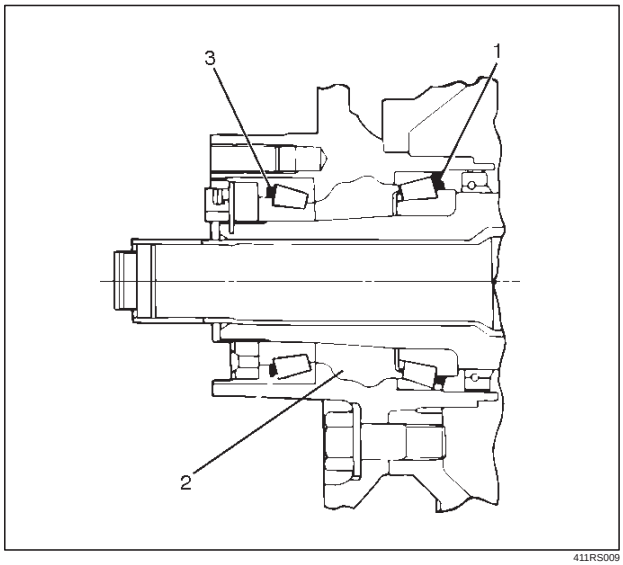

411RS009

Legend

(1) Inner Bearing
(2) Hub
(3) Outer Bearing

8. Install hub nut.

Turn to the place where there is a chamfer in the tapped hole to the outer side, then attach the nut by using front hub nut wrench J–36827.

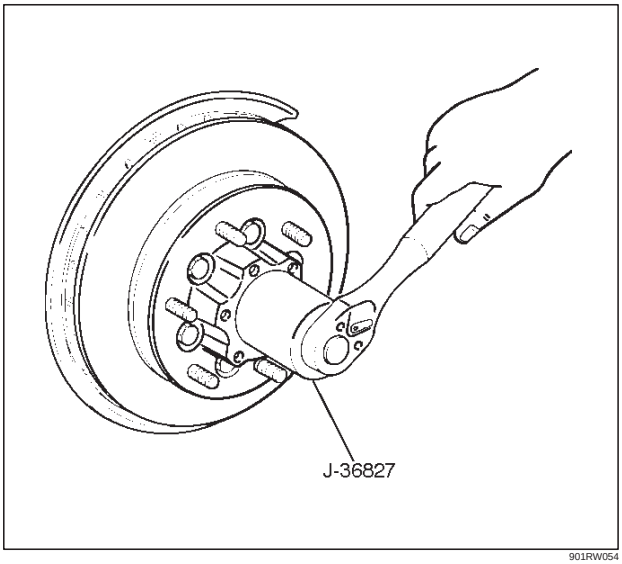

901RW054

Preload Adjustment

1. Tighten the hub nut to 29 N·m (22 lb ft), then fully loosen the nut.
2. Tighten the hub nut to the value given below, using a spring scale on the wheel pin.

New bearing and New oil seal

Bearing Preload: 20 N – 25 N (4.4 lb – 5.5 lb)

Used bearing and New oil seal

Bearing Preload: 12 N – 18 N (2.6 lb – 4.0 lb)

If the measured bearing preload is outside the specifications, adjust it by loosening or tightening the bearing nut.

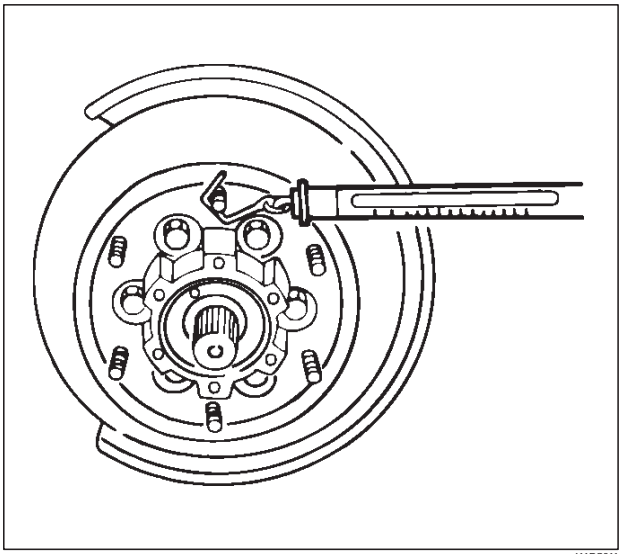

411RS011

Downloaded from www.Manualslib.com manuals search engine

9. Install lock washer and lock screw in the following manner.
   - Turn the side with larger diameter of the tapered bore to the vehicle outer side, then attach the washer.
   - If the bolt holes in the lock plate are not aligned with the corresponding holes in the nut, reverse the lock plate.
   - If the bolt holes are still out of alignment, turn in the nut just enough to obtain alignment.
   - Screw is to be fastened tightly so its head may come lower than the surface of the washer.

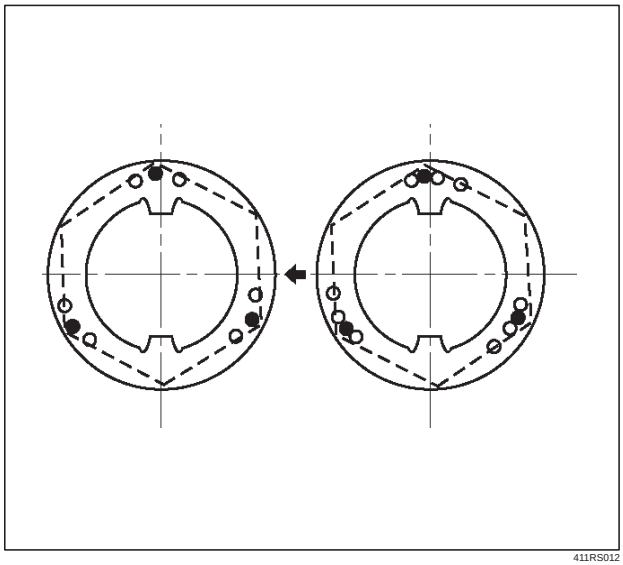

411RS012

10. Apply adhesive (LOCTITE 515 or equivalent) to both joining flange faces then install hub flange.
11. Install snap ring and shim.
    - Adjust the clearance between the free wheeling hub body and the snap ring.

    Clearance: 0 mm–0.3 mm (0 in–0.012 in)

    Shims Available: 0.2 mm, 0.3 mm, 0.5 mm, 1.0 mm (0.008 in, 0.012 in, 0.020 in, 0.039 in)

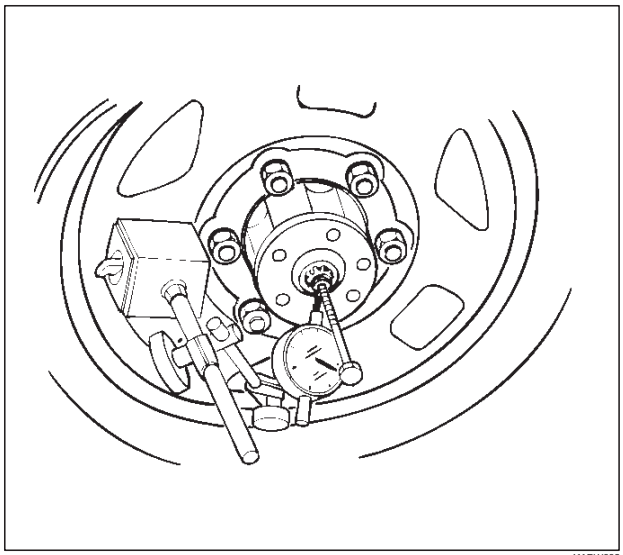

411RW002

12. Install hub cap.
13. Tighten the bolts to the specified torque.

    Torque: 59 N·m (43 lb ft)

Downloaded from www.Manualslib.com manuals search engine

Main Data and Specifications

Torque Specifications

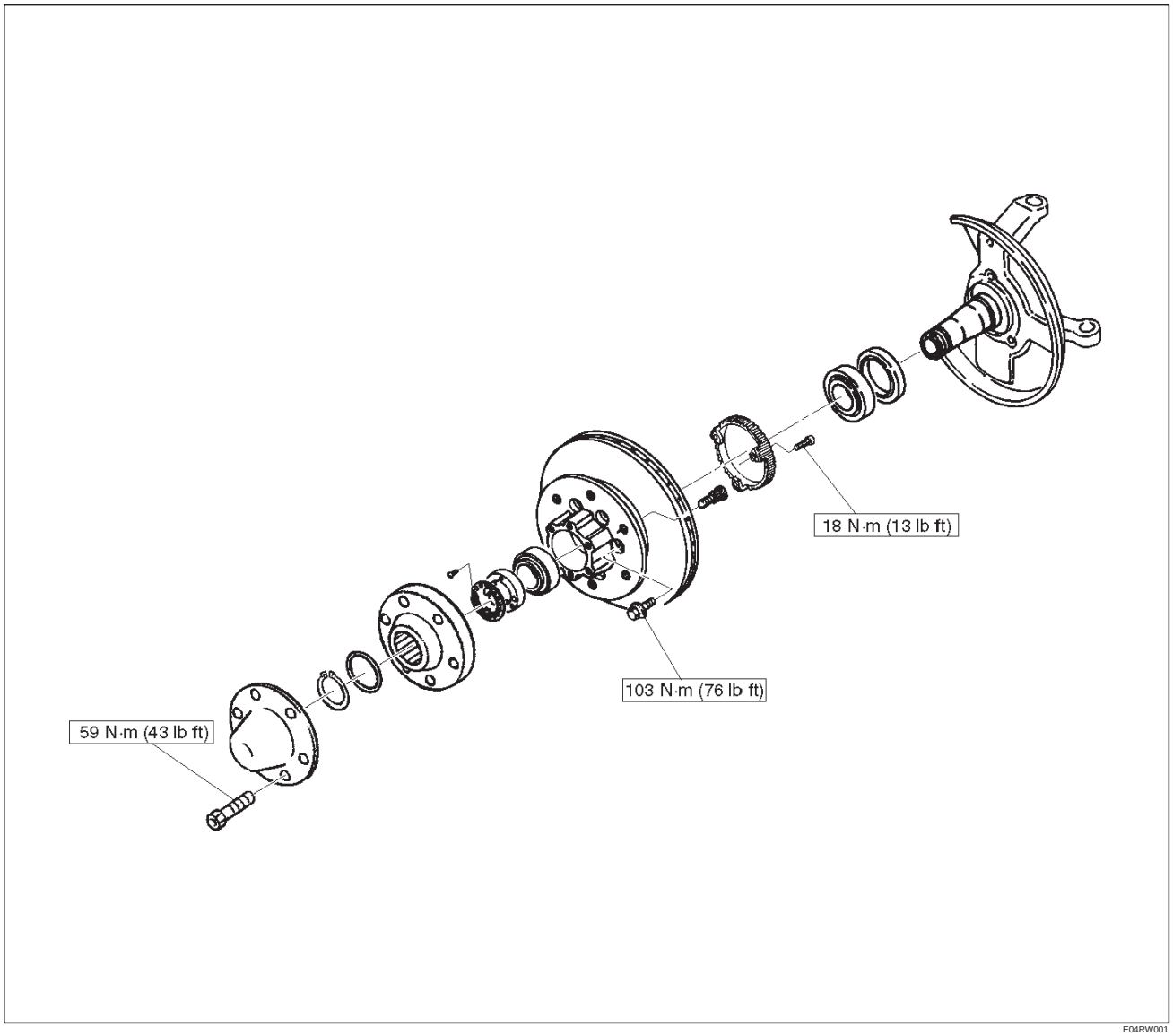

E04RW001

Downloaded from www.Manualslib.com manuals search engine

Special Tools

ILLUSTRATION	**TOOL NO.** TOOL NAME
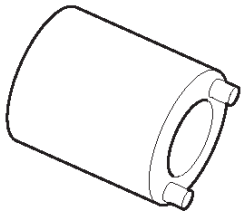 901RS246	**J–36827** Wrench; Hub nut
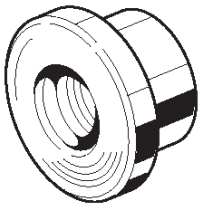 901RS247	**J–36829** Installer; Inner bearing
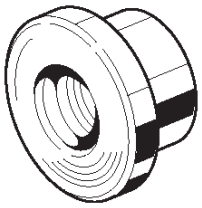 901RS248	**J–36828** Installer; Outer bearing
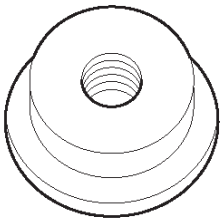 901RS249	**J–36830** Installer; Oil seal

Downloaded from www.Manualslib.com manuals search engine

Front Drive Shaft Joint

Front Drive Shaft Joints Replacement

- Refer to Front Drive Axle Assembly Replacement in this section, and refer to Front Hub and Disc in Suspension section.

Front Hub Bearing Preload Check

Check the hub bearing preload at the wheel pin.

New bearing and new oil seal:

19.6 – 24.5 N (4.4 – 5.5 lb)

Used bearing and new oil seal:

11.8– 17.7 N (2.6 – 4.0 lb)

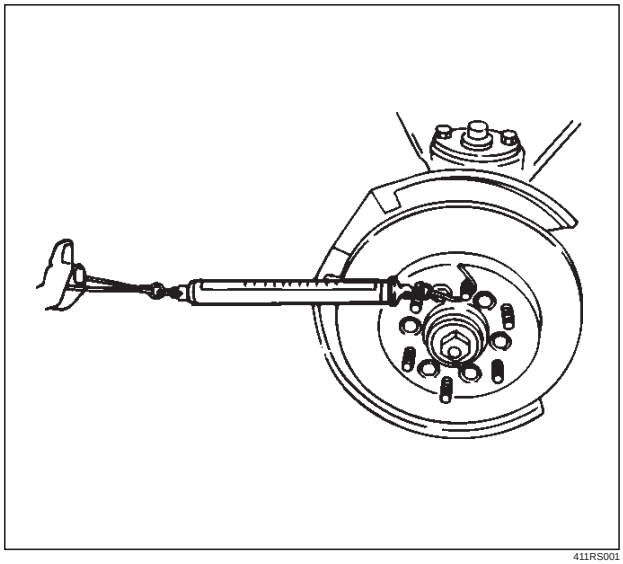

411RS001

Inspection Of Shift On The Fly System Gear Oil

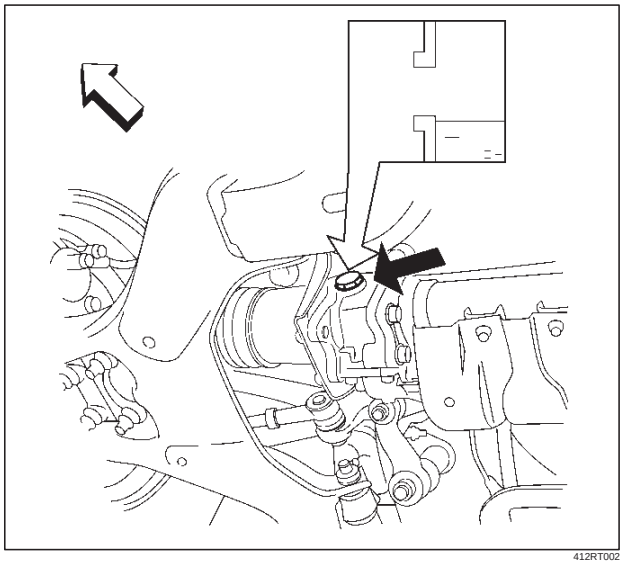

412RT002

1. Open filler plug and make sure that the oil is up to the plug port.
   If the level oil is low, replenish with gear oil GL–5 grade.
2. Tighten the filler plug to specified torque.

Torque: 78 N·m (58 lb in)

Downloaded from www.Manualslib.com manuals search engine

Front Axle Drive Shaft

Front Axle Drive Shaft and Associated Parts

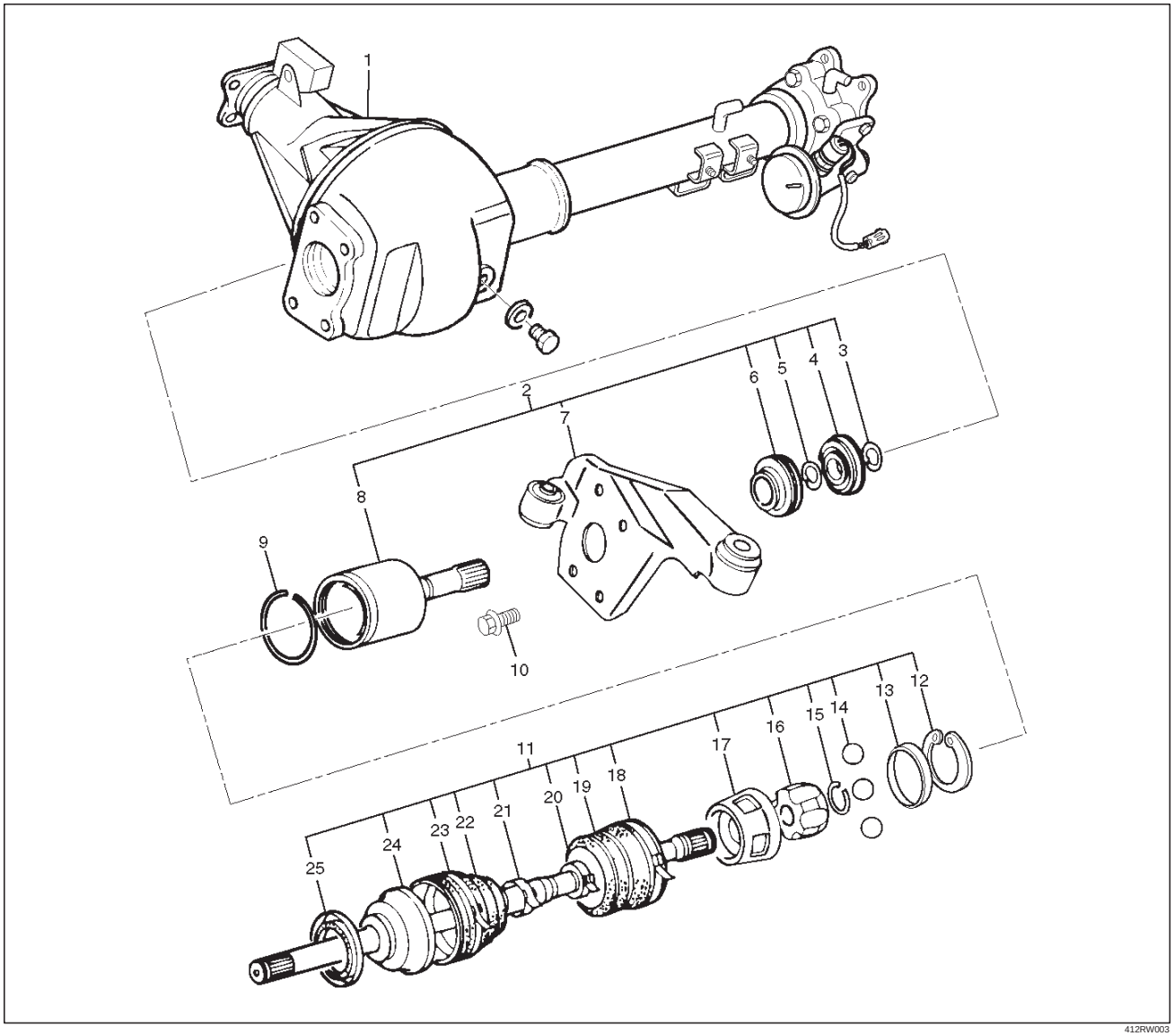

Legend

(1) Axle Case and Differential
(2) DOJ Case Assembly
(3) Snap Ring
(4) Bearing
(5) Snap Ring
(6) Oil Seal
(7) Bracket
(8) DOJ Case
(9) Circlip
(10) Bolt
(11) Drive Shaft Joint Assembly
(12) Snap Ring
(13) Spacer
(14) Ball
(15) Snap Ring
(16) Ball Retainer
(17) Ball Guide
(18) Band
(19) Bellows
(20) Band
(21) Band
(22) Bellows
(23) Band
(24) BJ Shaft
(25) Dust Seal

Downloaded from www.Manualslib.com manuals search engine

Disassembly

NOTE: For the left side, follow the same steps as right side.

1. Raise the hooked end of the band (1) with a screwdriver or equivalent.

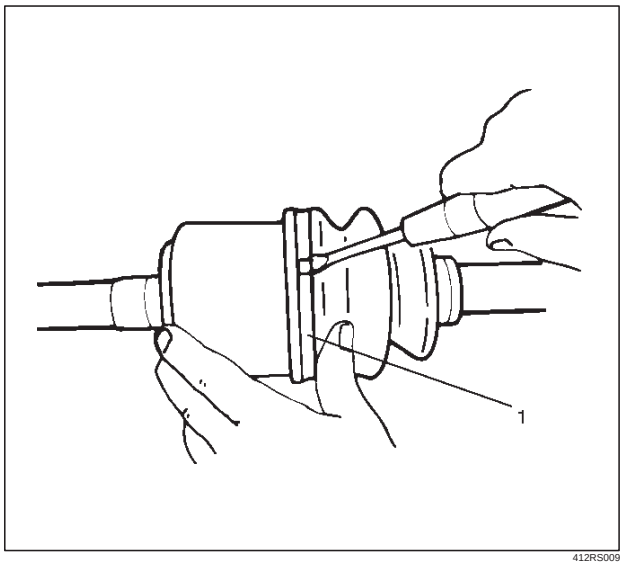

412RS009

2. Remove band.
3. Pry off circlip (1) with a screwdriver or equivalent.

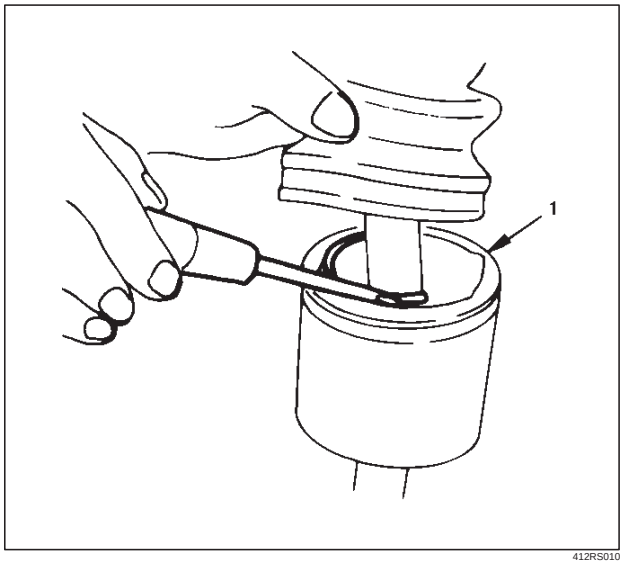

412RS010

4. Remove drive shaft joint assembly.
5. Using snap ring pliers, remove the snap ring.

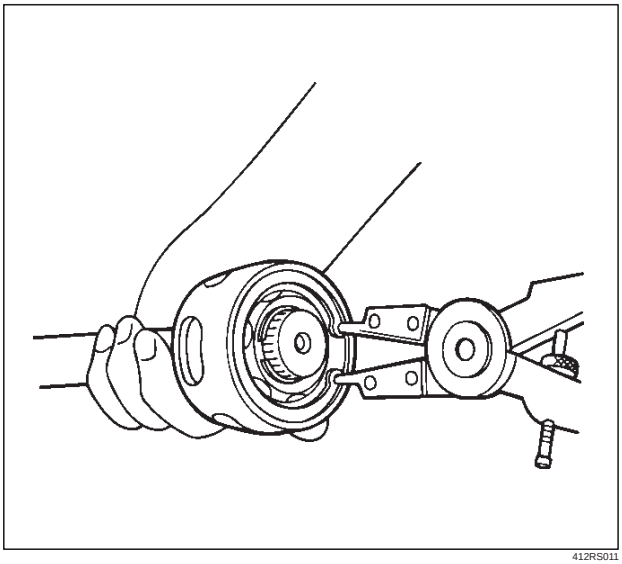

412RS011

6. Remove spacer.
7. Remove the six balls (1) with a screwdriver or equivalent.

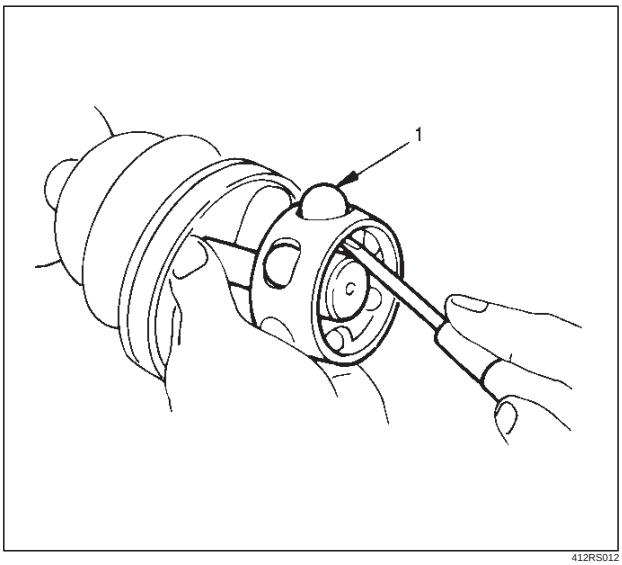

412RS012

Downloaded from www.Manualslib.com manuals search engine

8. Using snap ring pliers, remove the snap ring (1) fastening the ball retainer to the center shaft.

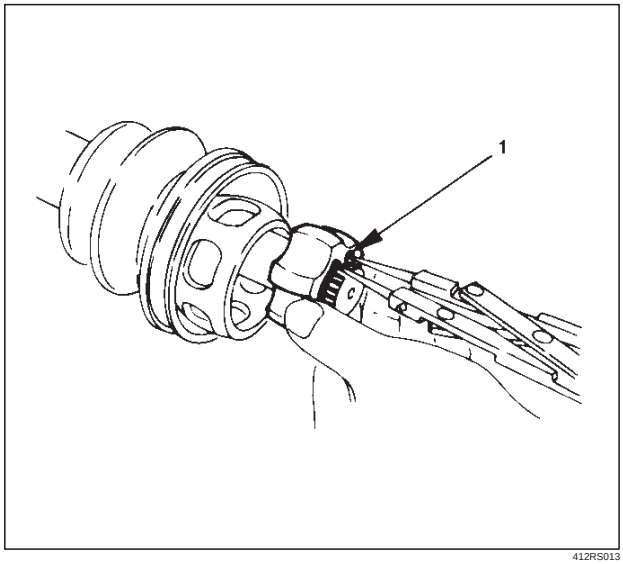

412RS013

9. Remove ball retainer, ball guide and bellows.
10. Raise the hooked end of the band (1) with a screwdriver or equivalent.

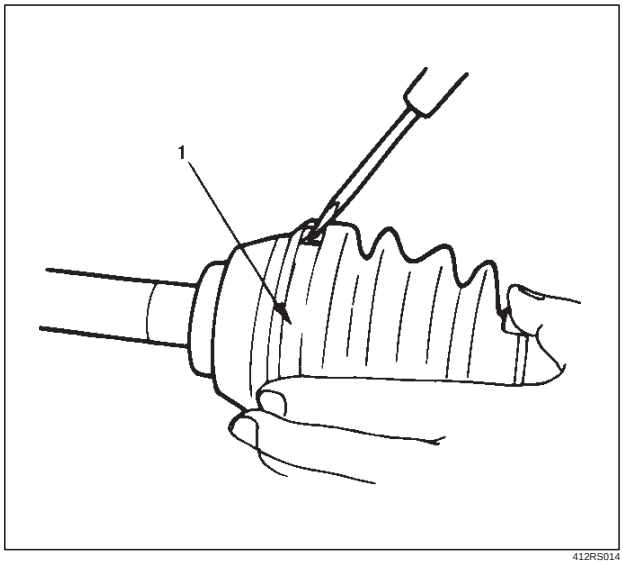

412RS014

11. Remove band.
12. Remove bellows.
13. Remove dust seal.
14. Remove BJ shaft assembly.
15. Remove the mounting bracket fixing bolts, and then remove DOJ case assembly from the axle case.
16. Remove snap ring and bearing.
17. Remove snap ring and oil seal.
18. Remove bracket.

Inspection and Repair

Make necessary correction or parts replacement if wear, damage, corrosion or any other abnormal conditions are found through inspection.
Check the following parts:

1. Drive shaft joint assembly
2. DOJ case, ball, ball guide, ball retainer
3. Bellows
4. Bearing
5. Dust seal, oil seal

Bushing Replacement

- Remove the bushings using a remover J–39378–1 and hammer.

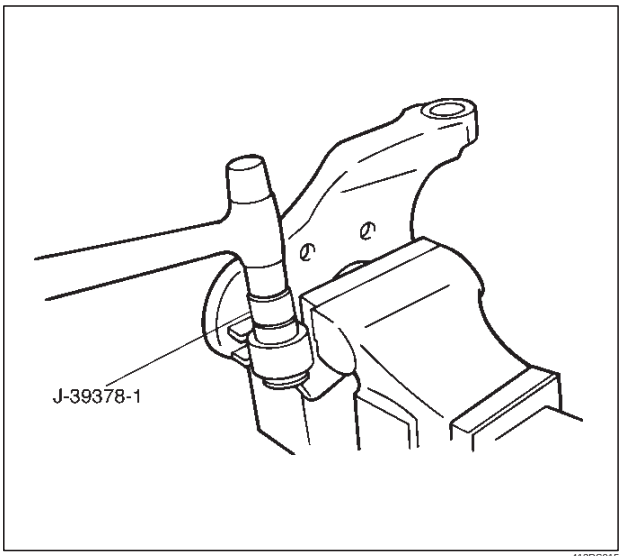

412RS015

- By using installer J–39378–2 and base J–39378–3, press fit the bushings into the bracket.

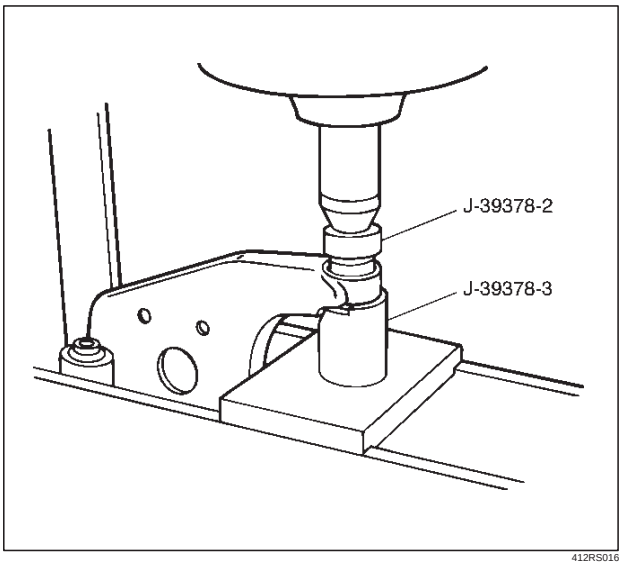

412RS016

Downloaded from www.Manualslib.com manuals search engine

Reassembly

1. Install DOJ case to bracket.
2. Install oil seal and fix snap ring.
3. Install bearing and fix snap ring.
4. Install bracket to axle case. Tighten the bracket bolt to the specified torque.

   Torque: 116 N·m (85 lb ft)
5. Apply 150g of the specified grease in BJ .
6. Install dust seal .
7. Apply a thin coat of grease to the shaft for smooth installation then install bellows.
8. Install band. Note the setting direction. After installation, check that the bellows is free from distortion.

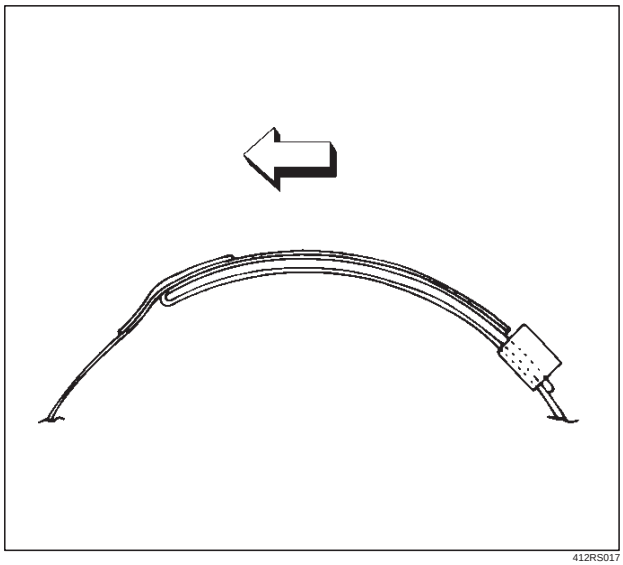

412RS017

9. Install another bellows and fix band.
10. Install the ball guide with the smaller diameter side ahead onto the shaft.
11. Install ball retainer.
12. Using snap ring pliers, install the snap ring (1) securing the ball retainer to the shaft.

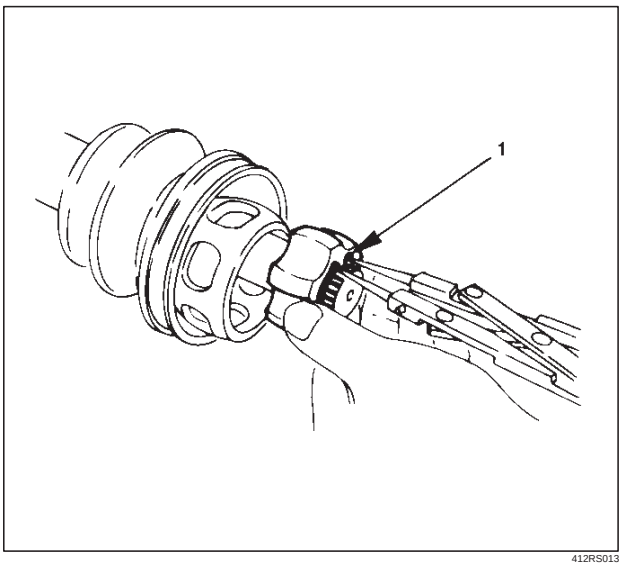

412RS013

13. Align the track on the ball (1) retainer with the window in the cage, and install the six balls into position.

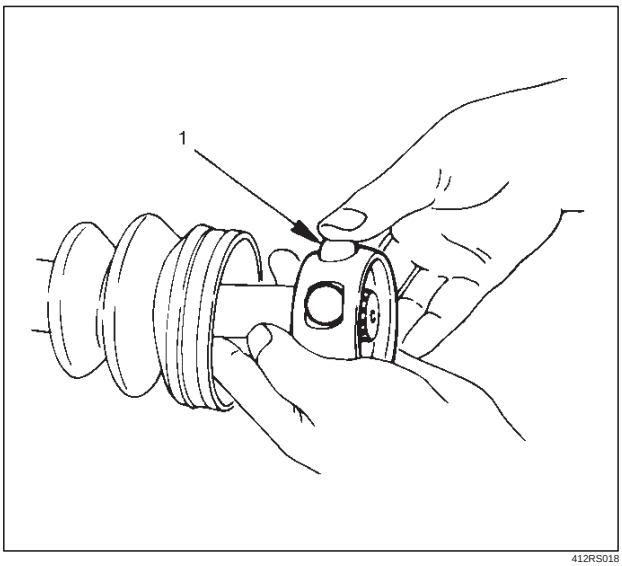

412RS018

Downloaded from www.Manualslib.com manuals search engine

14. Install spacer.
15. Install snap ring.
16. Enclose 150g of the specified grease in DOJ case, then install drive shaft joint assembly. After reassembly, move the DOJ longitudinally several times to get to fit.
17. Install the circlip (1) so that open ends are positioned away from the ball groove.

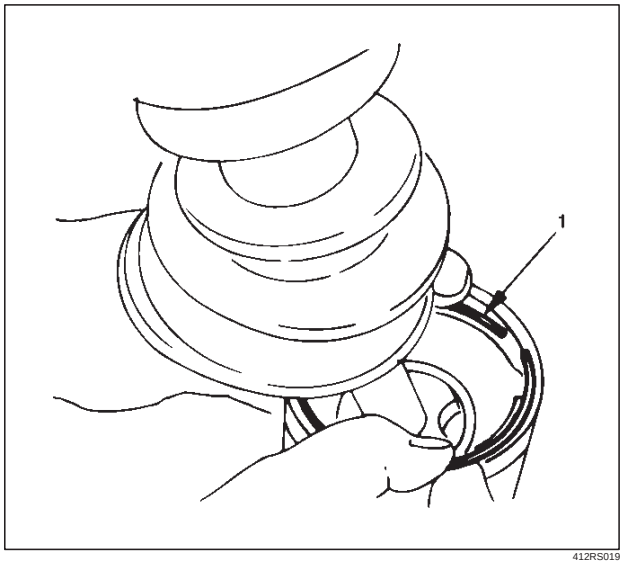

412RS019

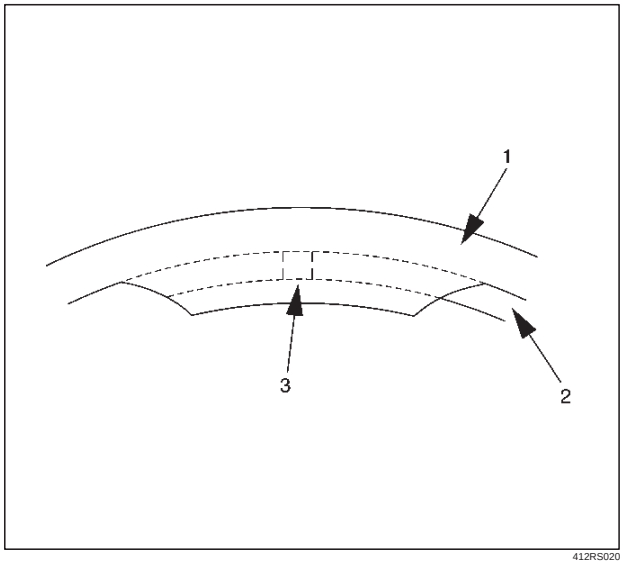

412RS020

Legend

(1) Outer Case
(2) Circlip
(3) Open Ends

18. Install bellows. Adjust the air pressure within the bellows by inserting a screwdriver or equivalent, so that it equals atmospheric pressure.

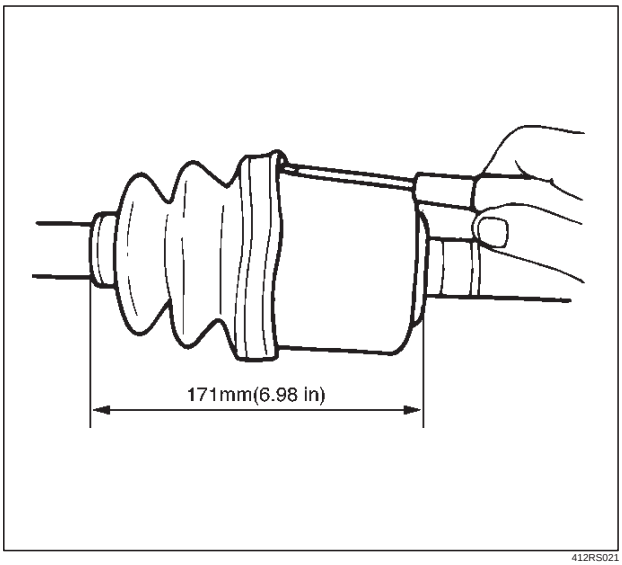

412RS021

19. Install Band. After installation, check that the bellows is free from distortion.

Downloaded from www.Manualslib.com manuals search engine

Shift On The Fly System

Shift On The Fly System and Associated Parts

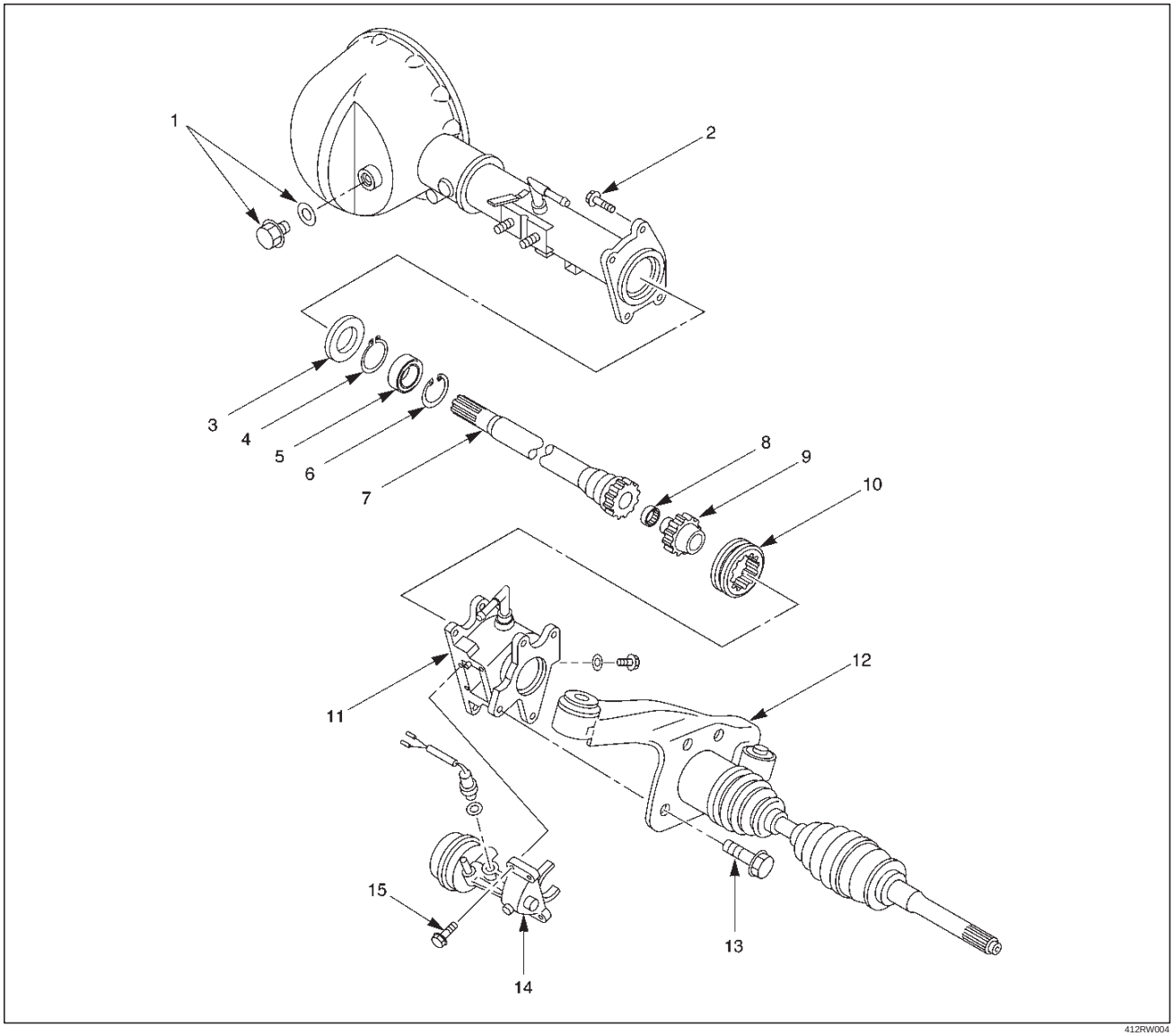

Legend

(1) Filler Plug
(2) Bolt
(3) Oil Seal
(4) Snap Ring(External)
(5) Inner Shaft Bearing
(6) Snap Ring(Internal)
(7) Inner Shaft
(8) Needle Bearing
(9) Clutch Gear
(10) Sleeve
(11) Housing
(12) Front Axle Drive Shaft (LH side)with Bracket
(13) Bolt
(14) Actuator Assembly
(15) Bolt

Disassembly

1. Remove filler plug and gasket, drain oil.
2. Loosen mounting bracket fitting bolts and remove front axle drive shaft from front axle case.
3. Remove Actuator Assembly and draw out actuator ASM.
4. Remove housing.
5. Remove sleeve.

Downloaded from www.Manualslib.com manuals search engine

6. Remove clutch gear.
7. Remove snap ring from front axle case by using snap ring pliers.

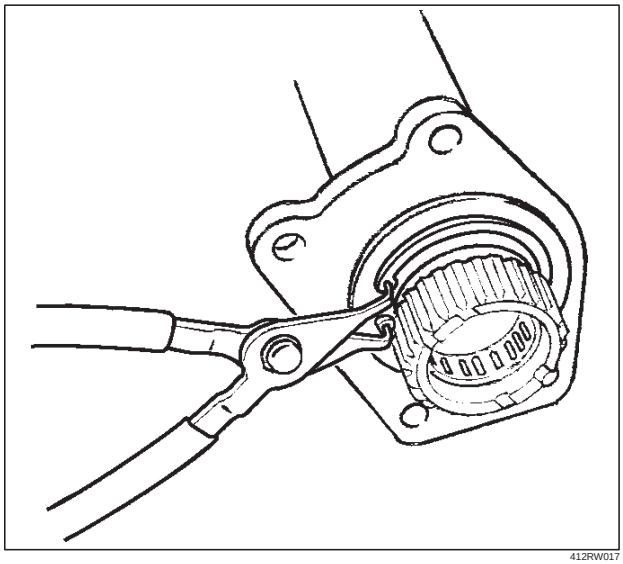

412RW017

8. Take out inner shaft from front axle case.
9. Remove snap ring from inner shaft by using snap ring pliers.

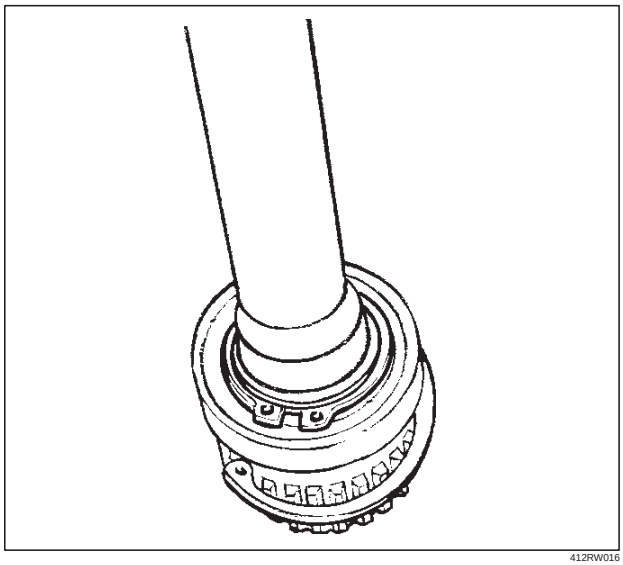

412RW016

10. Remove inner shaft bearing by using a remover J–37452 and press.

NOTE: Be careful not to damage the shaft.

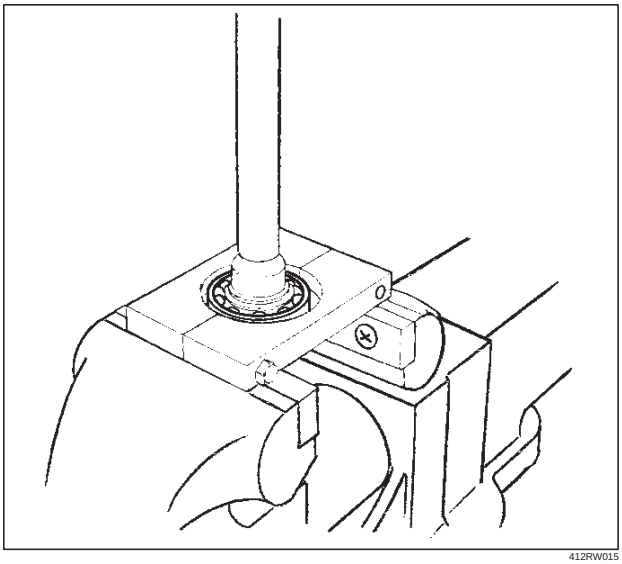

412RW015

11. Remove needle bearing from inner shaft by using a remover J–26941 and sliding hammer J–2619–01.

NOTE: Be careful not to damage the shaft.

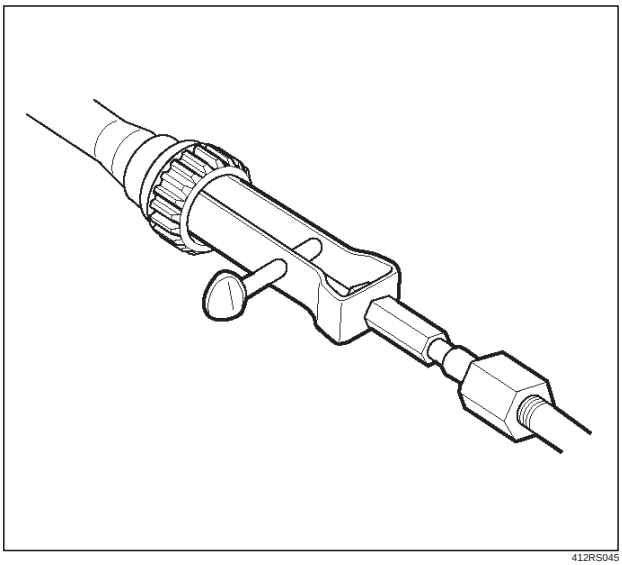

412RS045

12. Remove oil seal from front axle case.

NOTE: Be careful not to damage the front axle case.

Downloaded from www.Manualslib.com manuals search engine

Inspection and Repair

Inspect the removed parts. If there are abnormalities such as wear and damage, take corrective action or replace.

Visual Check

1. Check and see if the inner shaft has any abnormalities such as wear and damage.

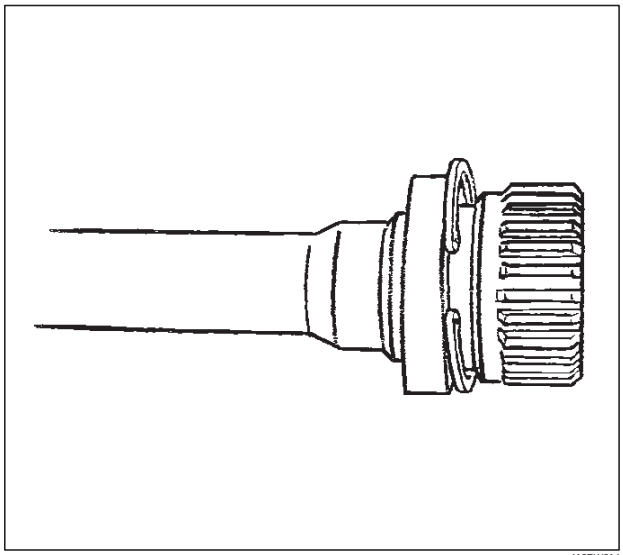

412RW014

2. When inspecting the inner shaft, be sure to check and see if its splined part is twisted, worn, or cracked. If so, replace with a new shaft. In case of an abnormality in its gear part (a slide with sleeve), replace the shaft.

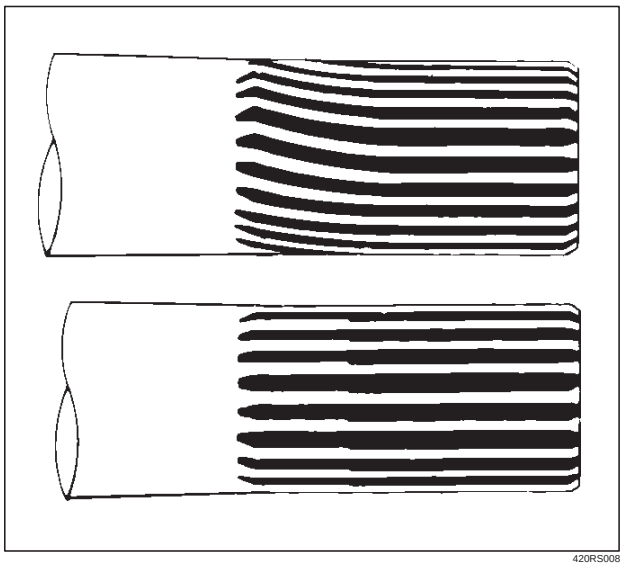

420RS008

Inner Shaft Run–Out

With both end centers supported, rotate the shaft slowly and measure deflection with a dial gauge.

Limit: 0.5 mm (0.02 in)

NOTE: Do not heat the shaft to correct its bend.

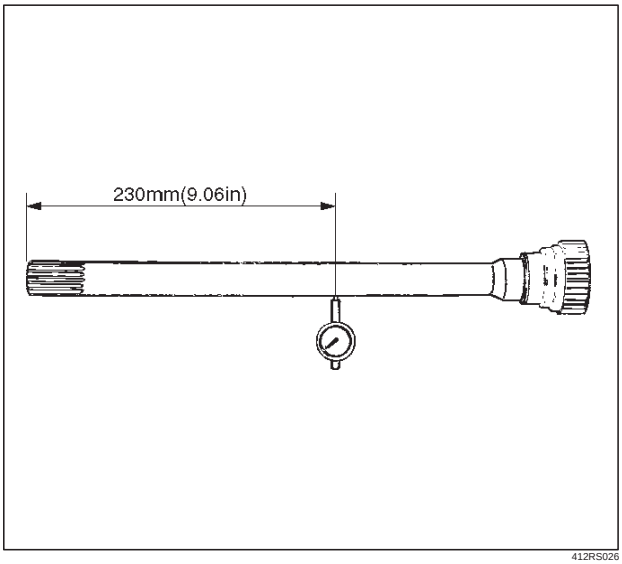

412RS026

Inner Shaft Bearing

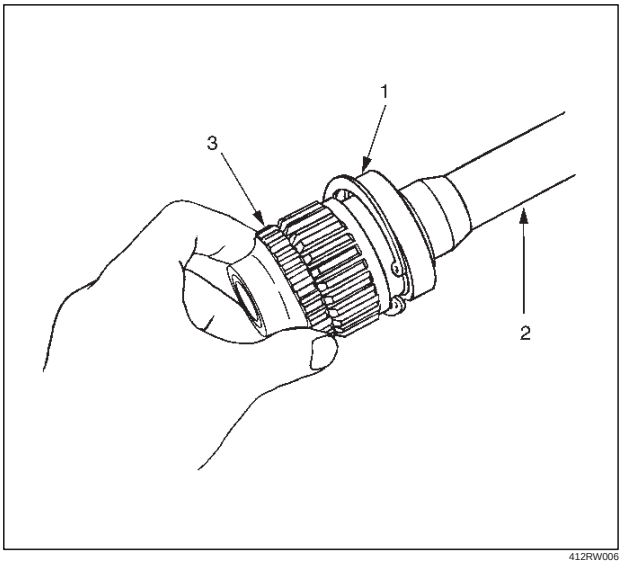

412RW006

Legend

(1) Inner Shaft Bearing
(2) Inner Shaft
(3) Clutch Gear

1. Inspect the state of inner shaft bearing. If any abnormality such as roughness is found, replace with a new inner shaft bearing.
2. Insert a clutch gear and check the state of needle bearing.
3. If there is an abnormality such as roughness, replace the needle bearing.

Downloaded from www.Manualslib.com manuals search engine

Sleeve Condition

Check and see that there is no wear, damage, or cracking in the sleeve.

NOTE: Close inspection of the groove and inner gear are required because those are important parts.

Sleeve Function

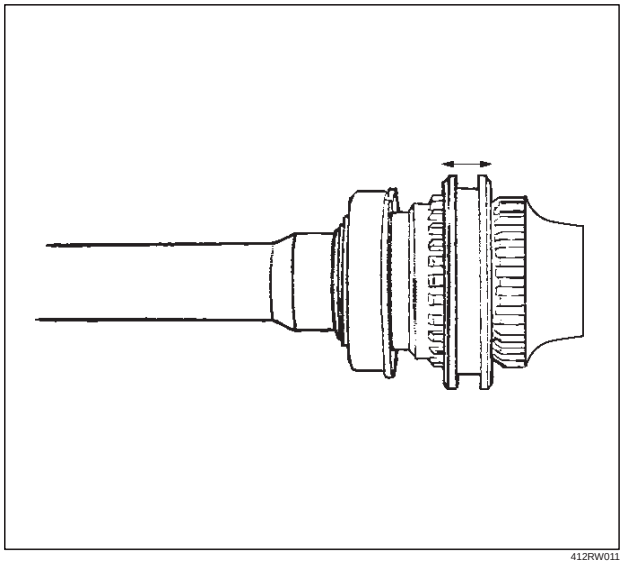

412RW011

Operate the sleeve with the inner shaft combined with the clutch gear. If roughness is felt, replace the sleeve.

NOTE: Gear oil should be applied to the contact surface of gear.

Check the width of sleeve center groove.

Limit: 7.1 mm (1.28 in)

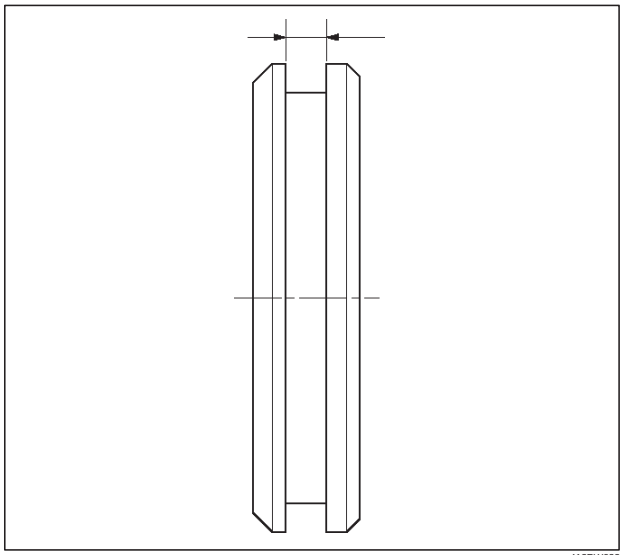

412RW022

Clutch Gear Condition

Check and see that there is no wear, damage, cracking, or any other abnormality in the clutch gear.

Clutch Gear Function

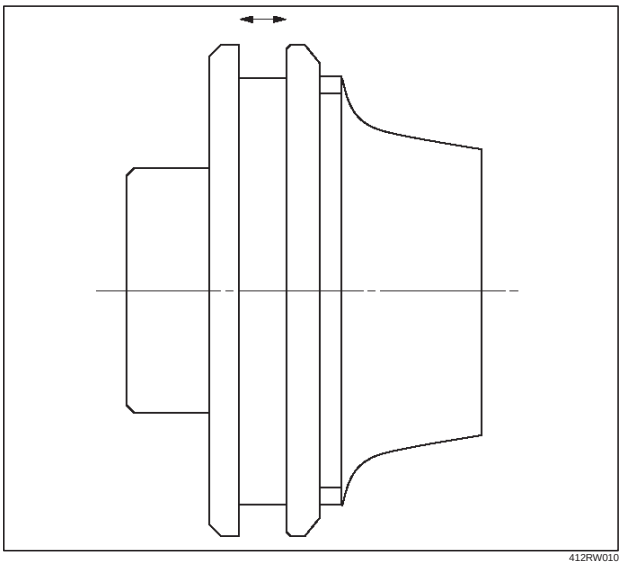

412RW010

If there is an abnormality such as roughness when operated in combination with sleeve, replace the clutch gear.

NOTE: When inspecting, gear oil should be applied to the contact surface of gear.

Clutch Gear Journal Diameter

Make sure of the size illustrated.

Limit: 36.98 mm (1.456 in)

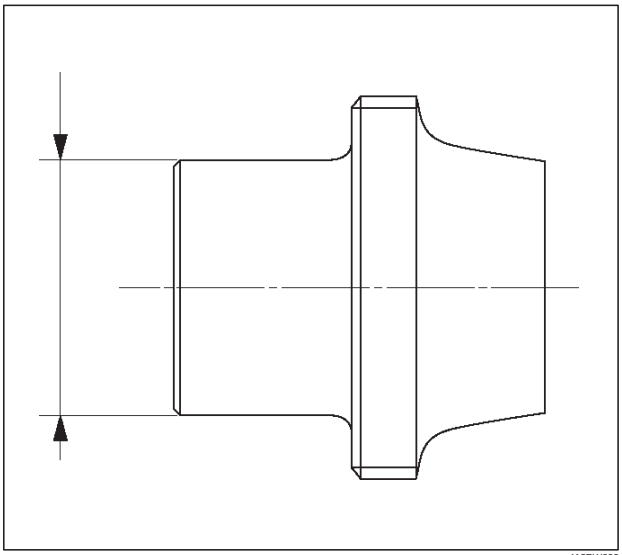

412RW009

Downloaded from www.Manualslib.com manuals search engine

Actuator

Check and see that there is no damage, cracking, or other abnormality.

Functional Check

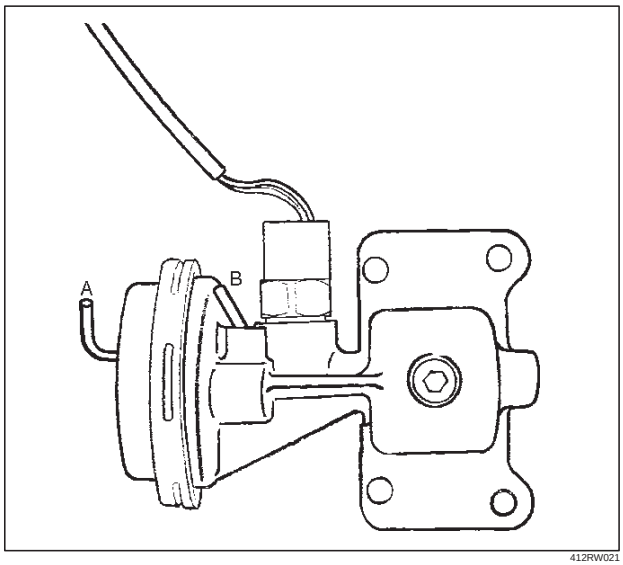

412RW021

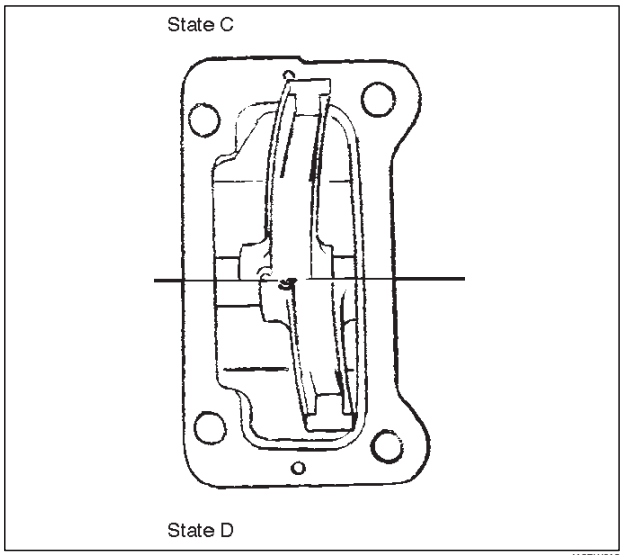

412RW013

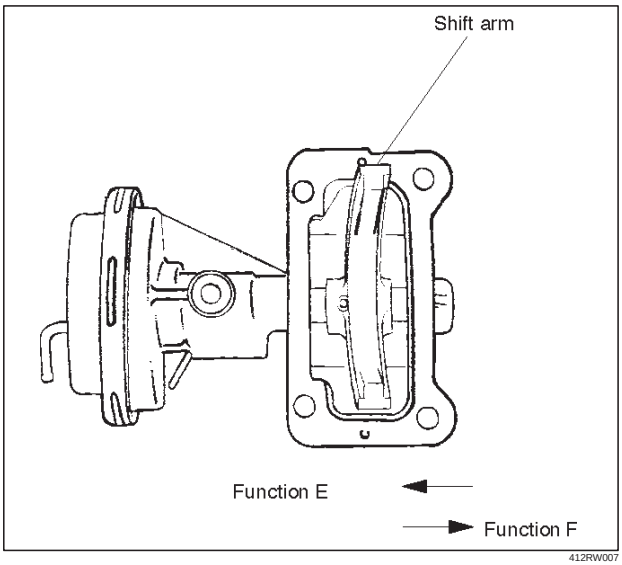

412RW007

Disconnect the shift position switch and make sure of function with a vacuum of –400 mmHg applied to Ports A and B, in accordance with the table below.

State	Port A	Port B	Function
C	–400 mmHg	A/P	E
D	A/P	–400 mmHg	F

If there is an abnormality, replace the actuator as an assembly.

NOTE:

1. If the actuator works under –400mmHg or less, there is no functional problem.

Downloaded from www.Manualslib.com manuals search engine

2. Be careful not to permit the entry of water or dust into the ports of the actuator.

Dimensional Check

Measure illustrated sizes 1, 2, and 3.

Limit

1=64.1 mm (2.52 in)

2=6.7 mm (0.26 in)

3=6.7 mm (0.26 in)

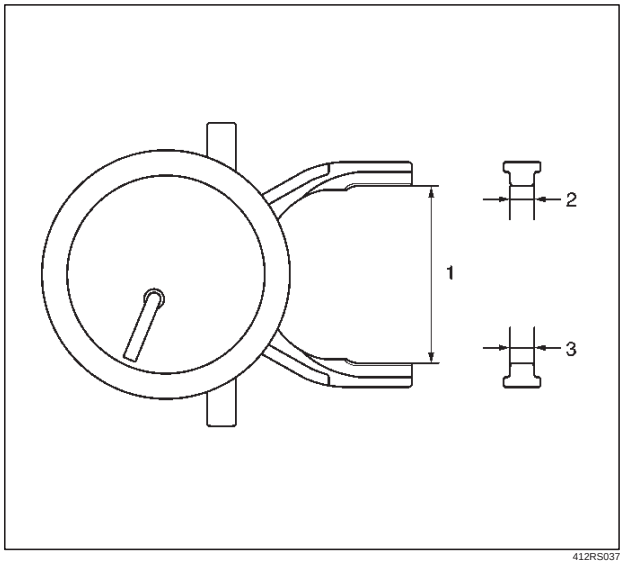

412RS037

Reassembly

1. Install the new oil seal which has been immersed in differential gear oil, by using an oil seal installer J–41693 and grip J–8092.

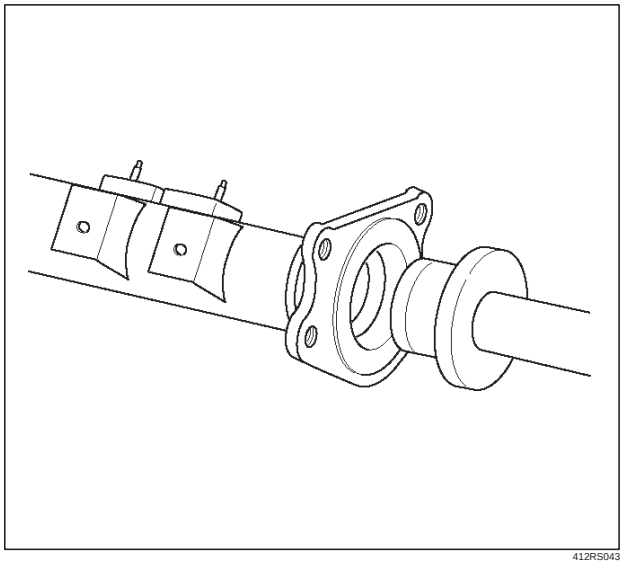

412RS043

2. Force a new needle bearing into inner shaft by using a installer J–41694 and grip J–8092.

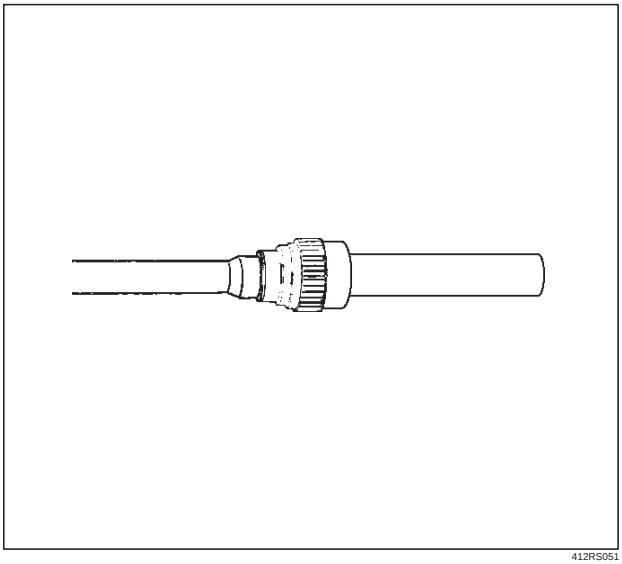

412RS051

3. Place a new snap ring(internal) in inner shaft.
   Force a new inner shaft bearing into the inner shaft by using a installer J–37452 and press.

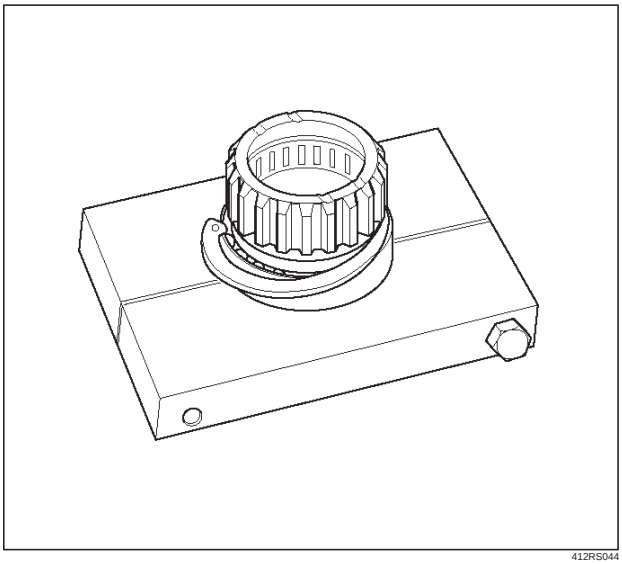

412RS044

4. Install snap ring(external).

NOTE: Be careful not to damage the inner shaft.

5. Clean the housing contact surface of the front axle case and insert inner shaft assembly into the front axle case.

NOTE: Be careful not to damage seal.

Downloaded from www.Manualslib.com manuals search engine

6. Install snap ring (internal) in the groove of front axle case.

NOTE: Be sure to install the snap ring properly.

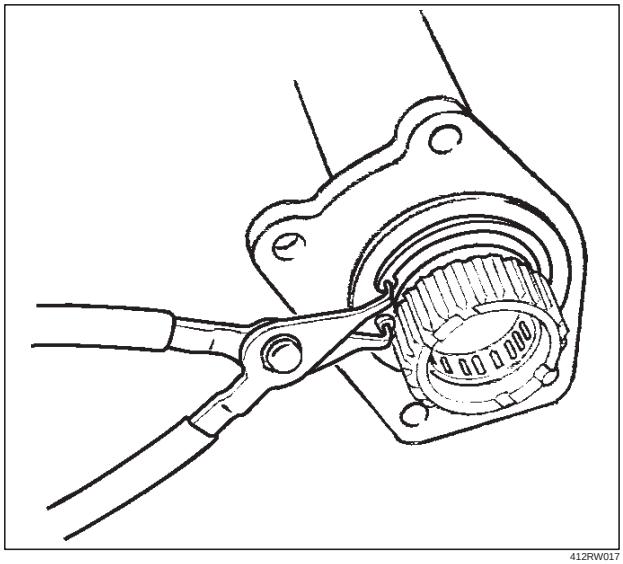

412RW017

7. Apply differential gear oil to clutch gear, then install clutch gear.
8. Apply differential gear oil to sleeve, then install sleeve.
9. Clean contact surface with the front axle and actuator mounting surface. Apply liquid gasket to the contact surface on the front axle case, then install in the housing.

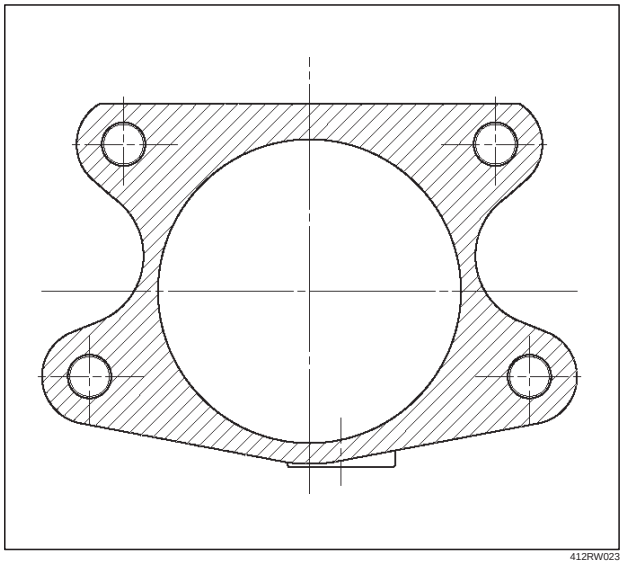

412RW023

10. Tighten bolts to specified torque.

    Torque: 116N·m(85 lb ft)

11. Clean the actuator contact surface with the housing then Install and tighten shift position switch to specified torque.

    Torque: 39N·m (29 lb ft)

12. Apply liquid gasket to the contact surface on the actuator side.

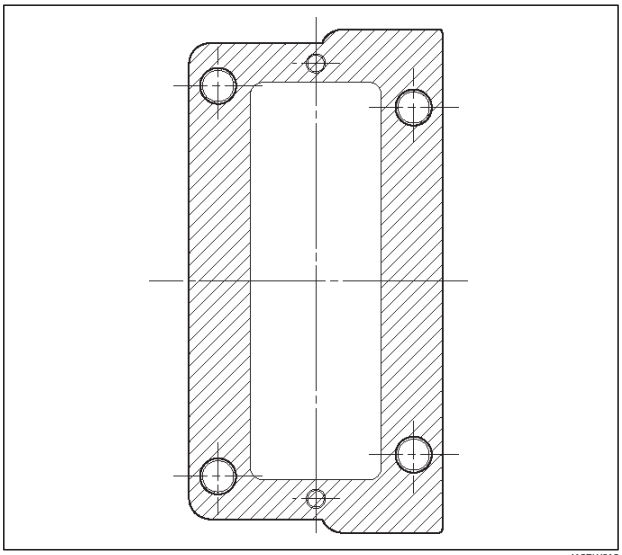

412RW012

13. Align shift arm with the groove of sleeve and install the actuator.
14. Tighten bolts to specified torque.

    Torque: 13N·m(113 lb ft)

15. Install front axle drive shaft and mounting bracket. Tighten fitting bolts to specified torque.

    Torque: 116N·m (85 lb ft)

16. Pour specified amount of differential gear oil to filler plug.

    Front Differential

    Oil Capacity: 1.4lit (1.48US qt)

    Actuator Housing

    Oil Capacity: 0.12lit(0.13US qt)

17. Install filler plug through gasket and tighten to specified torque.

    Torque: 7.8N·m (58lb ft)

Downloaded from www.Manualslib.com manuals search engine

Main Data and Specifications

General Specifications

Front drive axle oil capacity	1.4 liter (1.48 US qt)(Differential)
	0.12 liter (0.13 US qt)(Actuator Housing:Shift on the fly)
Type of lubricant	GL–5 (Multi grade type) Refer to chart in General Information
Axle shaft type	Constant velocity joint(Birfield joint type and double offset joint)

Torque Specifications

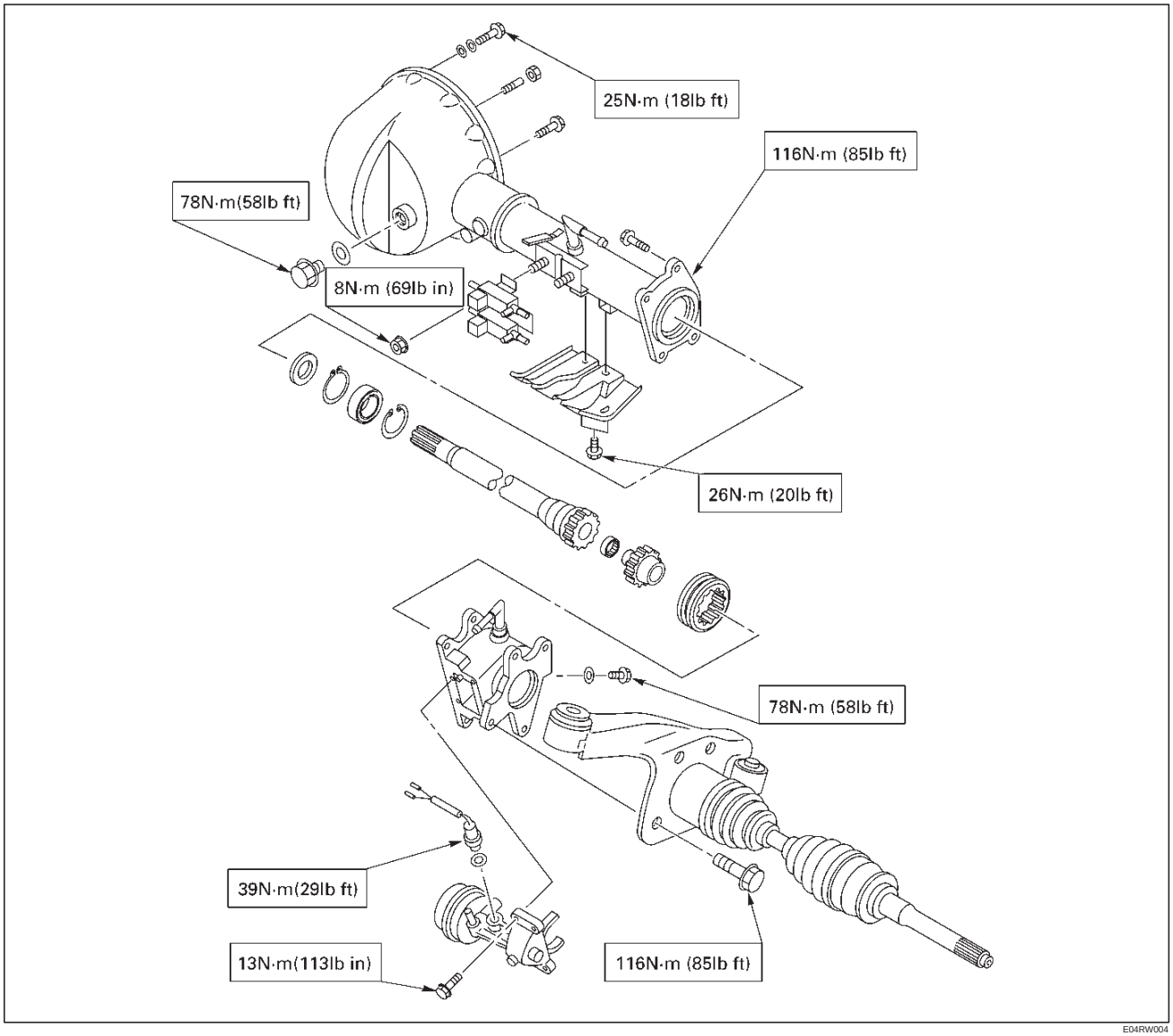

E04RW004

Downloaded from www.Manualslib.com manuals search engine

Special Tools

ILLUSTRATION	**TOOL NO.** TOOL NAME
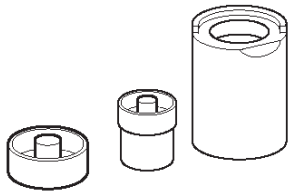 901RS233	**J–39378** Remover and Installer; Front Axle mount bushing
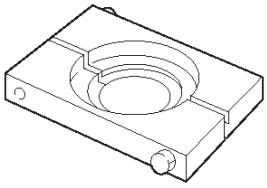 901RS216	**J–37452** Remover and Installer; Inner shaft bearing
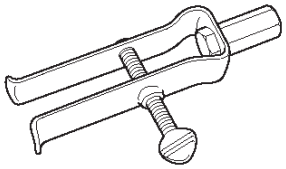 901RS234	**J– 26941** Remover;Bearing needle
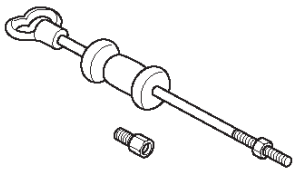 901RS235	**J–2619–01** Hammer; Sliding
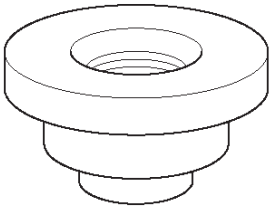 901RS236	**J–41693** Installer; Oil seal
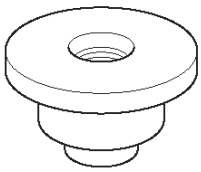 901RS177	**J–41694** Installer; Bearing needle

ILLUSTRATION	**TOOL NO.** TOOL NAME
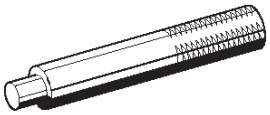 901RS285	**J–8092** Grip

Downloaded from www.Manualslib.com manuals search engine

Front Propeller Shaft

General Description

Since the propeller shaft is balanced carefully, welding or any other modifications are not permitted.

Alignment marks should be applied to each propeller shaft before removal.

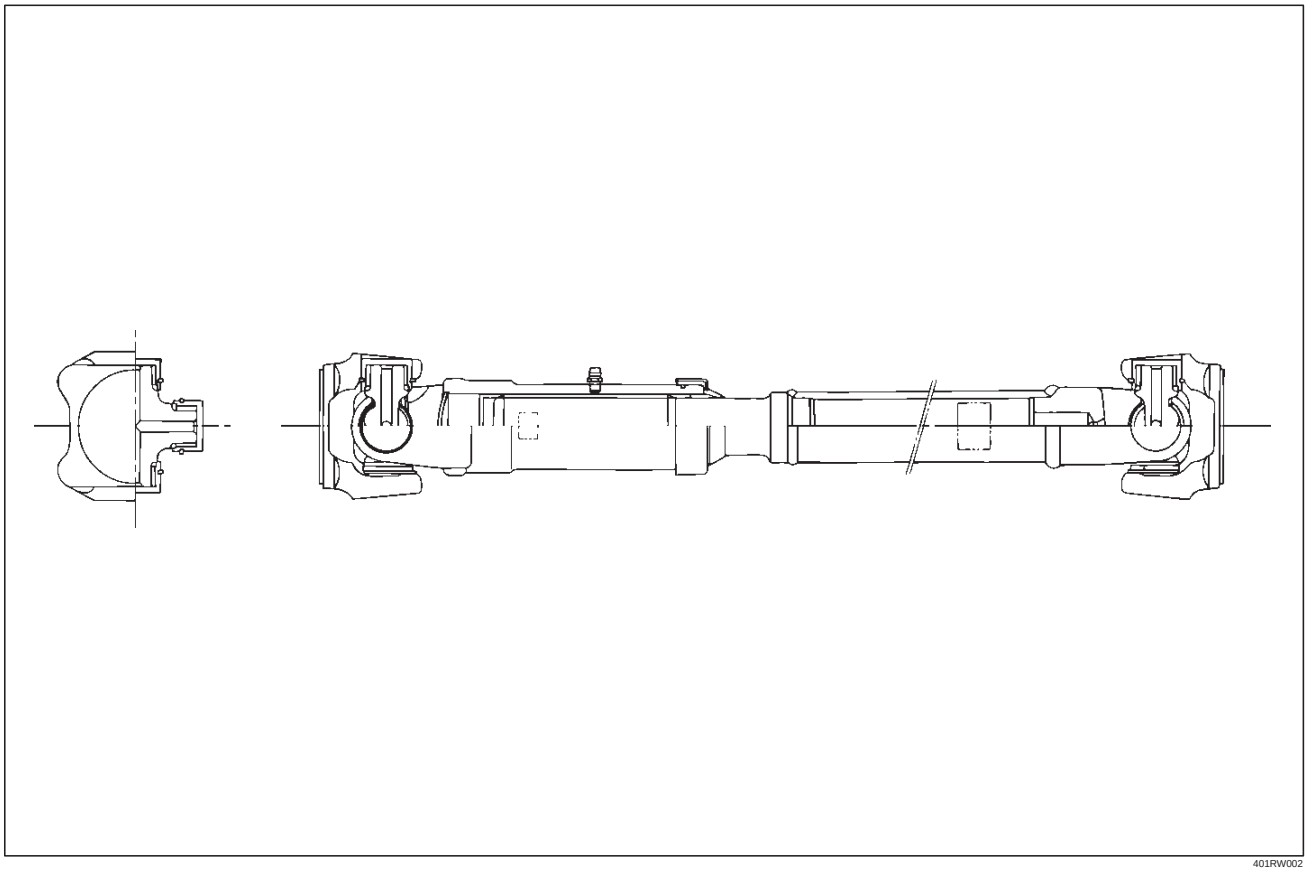

401RW002

Downloaded from www.Manualslib.com manuals search engine

Front Propeller Shaft and Associated Parts

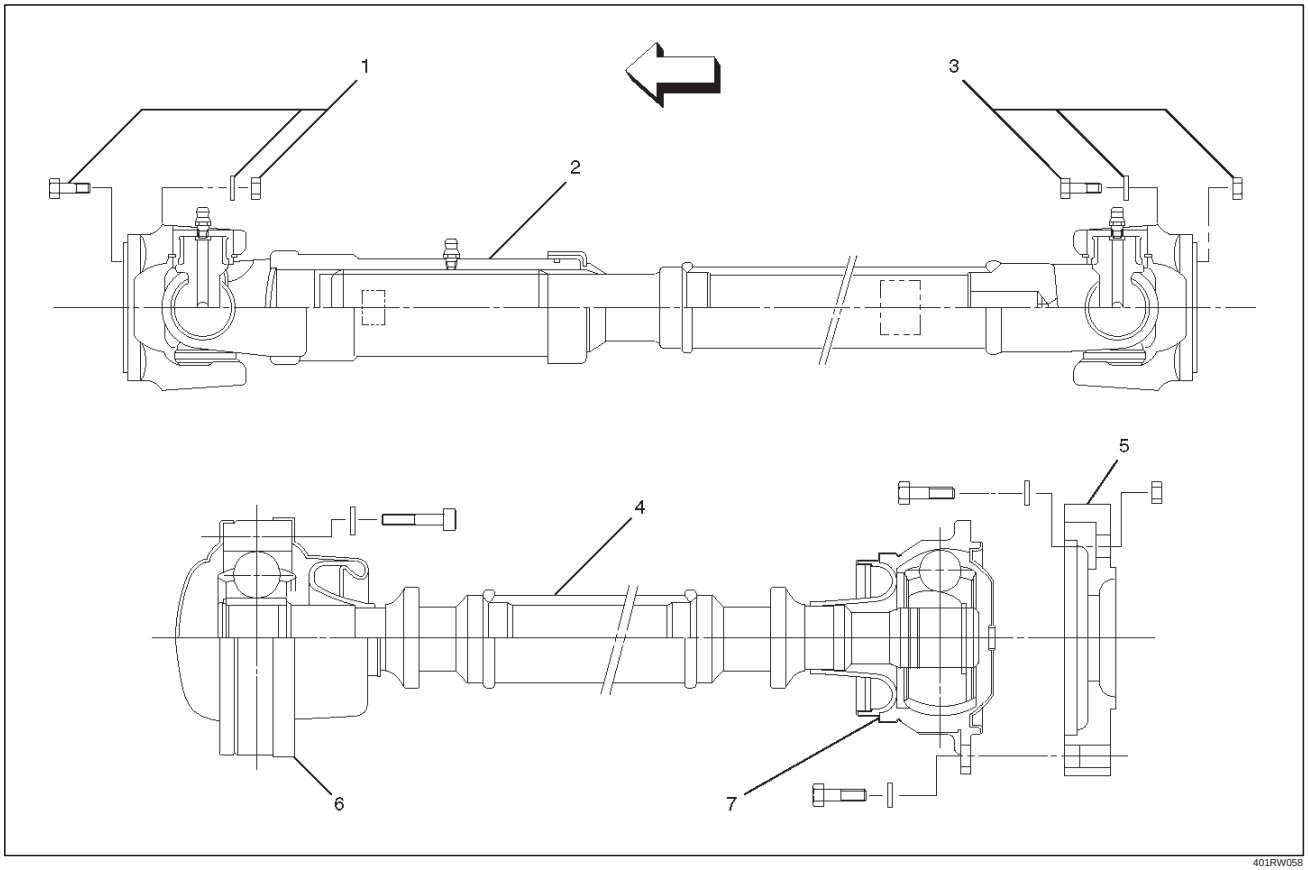

401RW058

Legend

(1) Bolt, Nut and Washer (Front Axle Side)
(2) Front Propeller Shaft
(3) Bolt, Nut and Washer (Transfer Side)
(4) Front Propeller Shaft (with TOD)
(5) Coupling
(6) LJ Constant Velocity Joint
(7) BJ Constant Velocity Joint

Removal

1. Jack up the vehicle and support it on the chassis stands.
2. Gear shift lever should be placed in neutral position and parking brake released.
3. Remove the exhaust and transfer protectors.

NOTE: Apply alignment marks on the flange at the front propeller shaft both front and rear side.

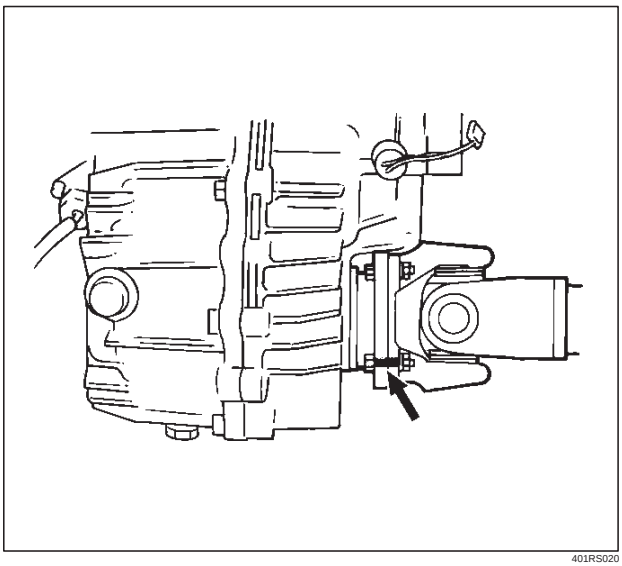

401RS020

Downloaded from www.Manualslib.com manuals search engine

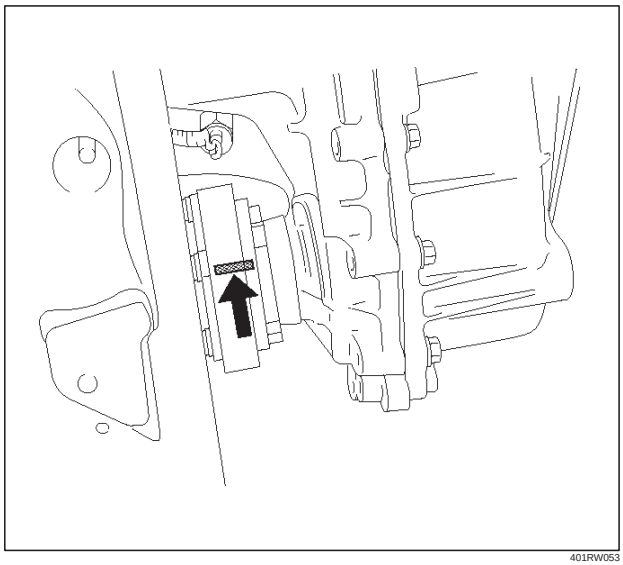

401RW053

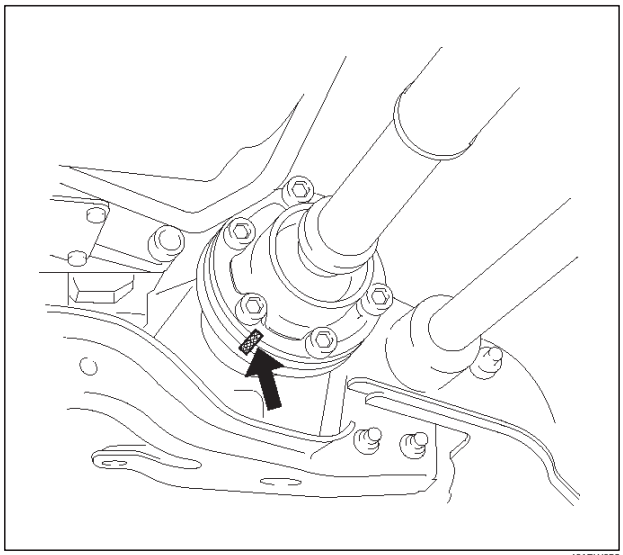

401RW052

4. Remove bolt, nut and washer (Front axle side).
5. Remove bolt, nut and washer (Transfer side).
6. Remove front propeller shaft.

NOTE: If equipped with torque on demand (TOD), when removing, installing or carring for front propeller shaft, be sure to wind a piece of cloth round the part of the boot with which fittings may interfere so that the boot can be protected. The boot may be damaged if bending force is applied to the constant velocity joint of the shaft.

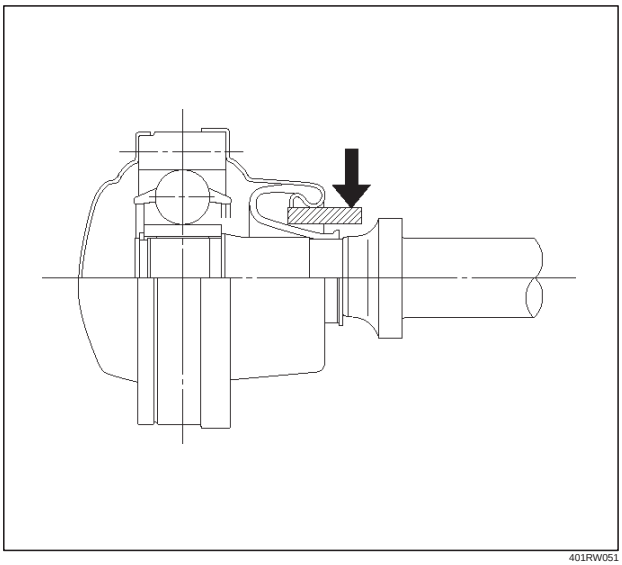

401RW051

Installation

NOTE: Never install the shaft assembly backwards. Completely remove the black paint from the connecting surface of flange coupling on each end of propeller shaft. Clean so that no foreign matter will be caught in between.

1. Align the mark which was applied at removal. Install front propeller shaft and tighten the bolts to the specified torque.

   Torque: 63 N·m (46 lb ft)

2. Install the exhaust and transfer protectors.
3. After installing the propeller shaft, be sure to apply black paint (1) to exposed area (other than connecting surface) of the entire surface of flange coupling .

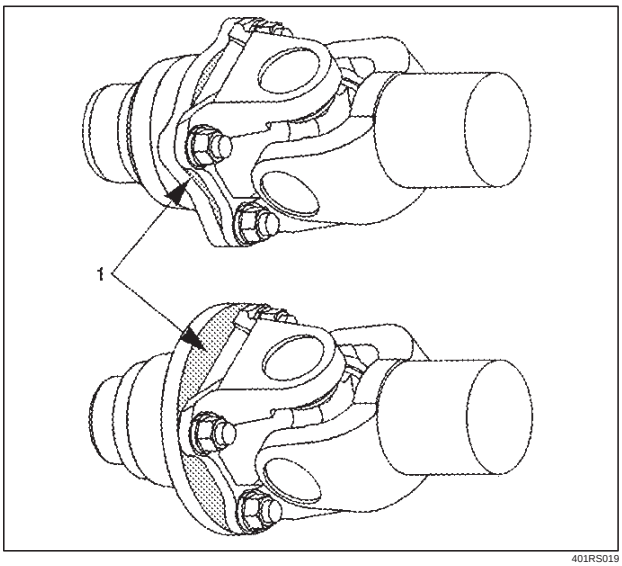

401RS019

Downloaded from www.Manualslib.com manuals search engine

Disassembly (Except TOD 4×4)

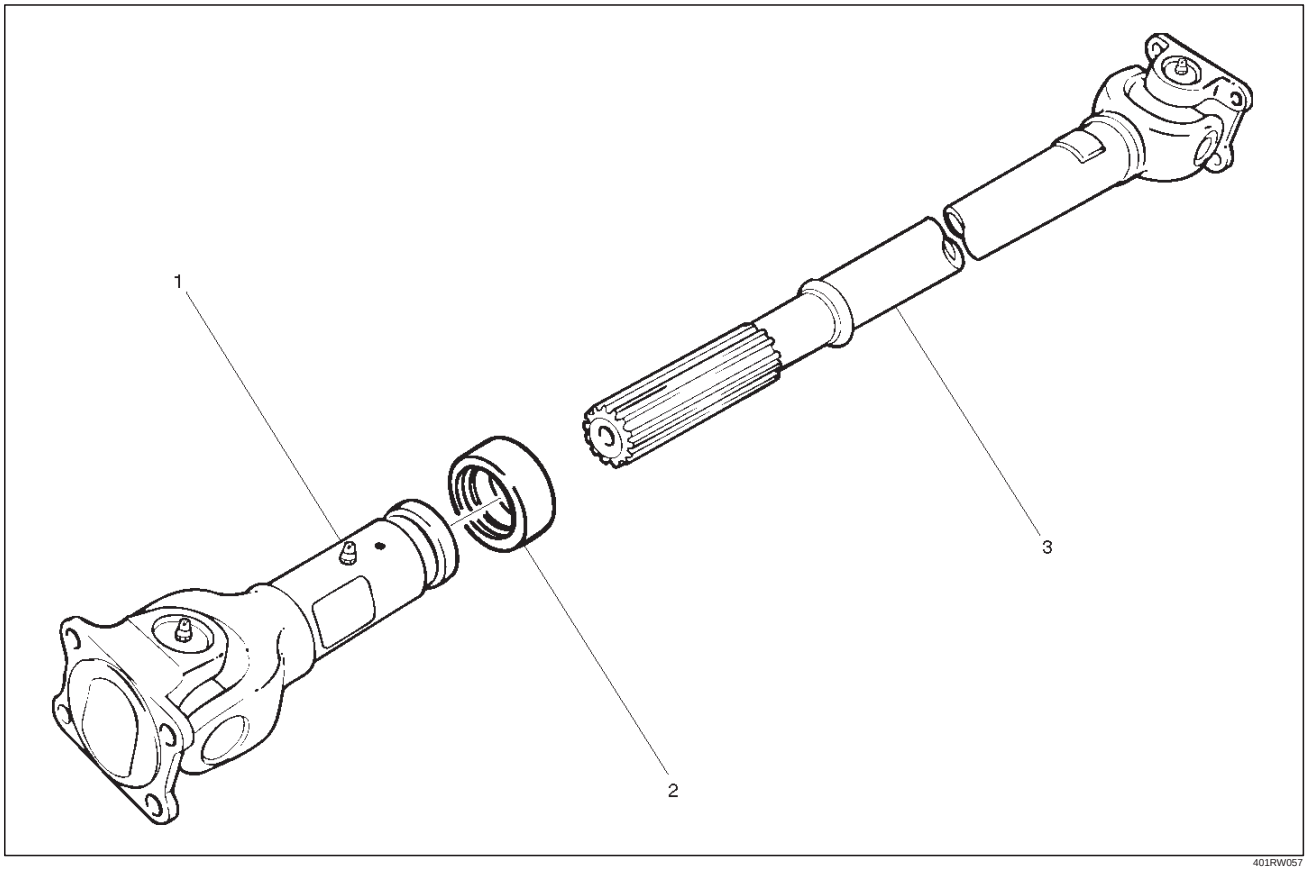

401RW057

Legend

(1) Sleeve Yoke
(2) Seal
(3) Tube Assembly

1. Apply alignment marks (1) on the sleeve yoke and tube assembly then remove sleeve yoke.

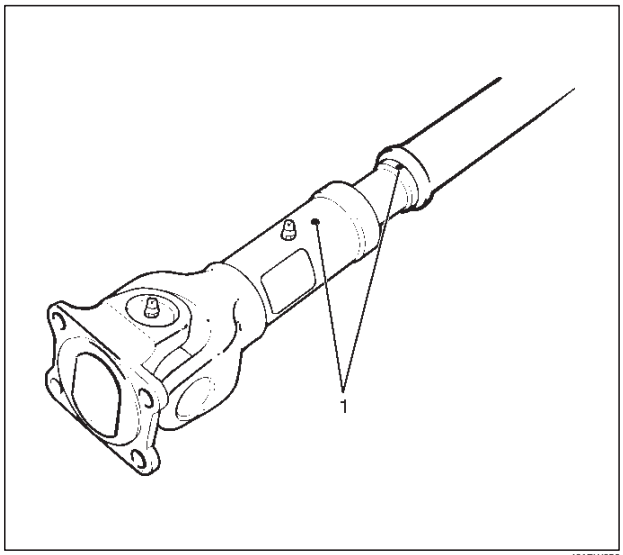

401RW056

2. Remove seal.
3. Remove tube assembly.

Downloaded from www.Manualslib.com manuals search engine

Universal Joint Disassembly

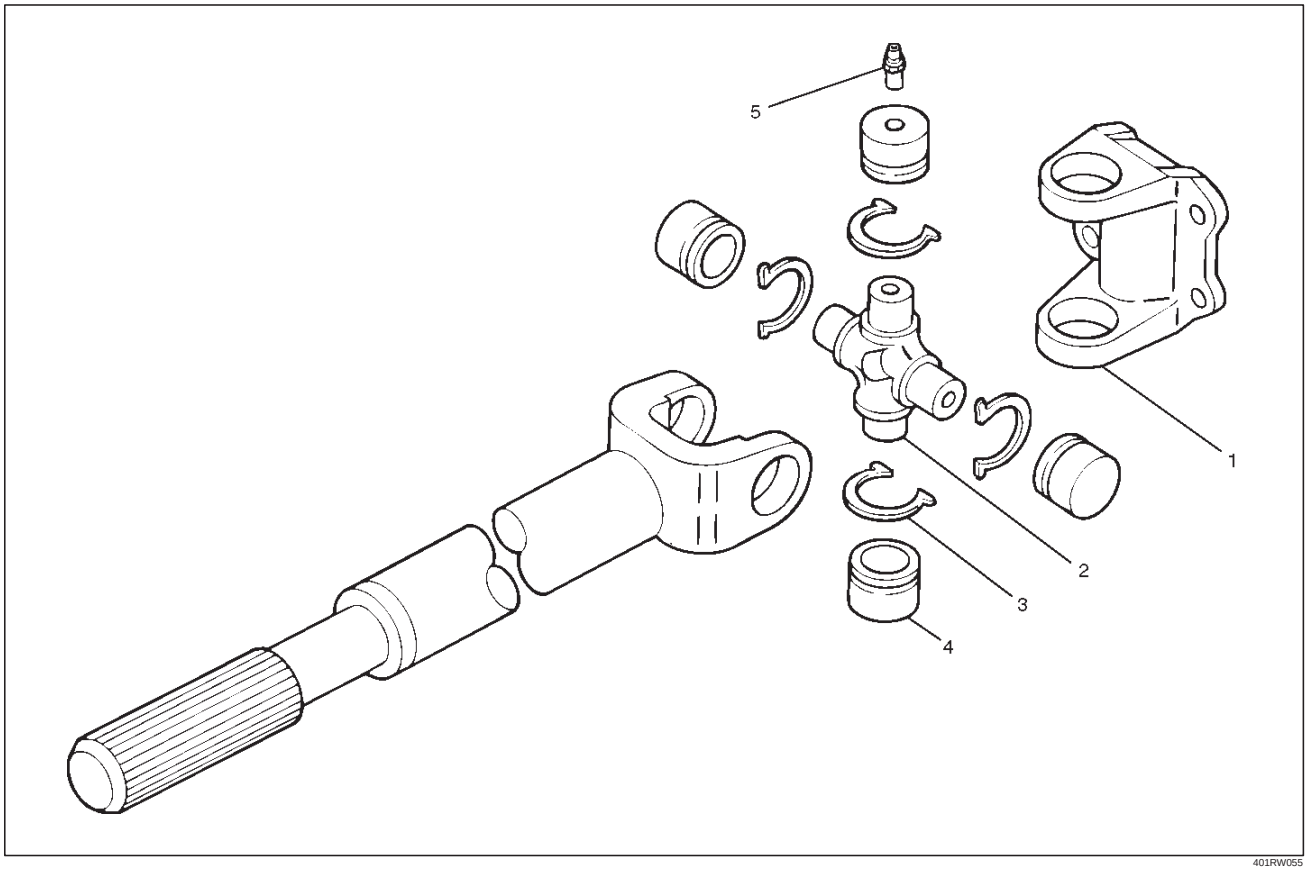

401RW055

Legend

(1) Flange Yoke
(2) Spider
(3) Snap Ring
(4) Needle Roller Bearing
(5) Grease Fitting

1. Apply alignment marks (1) on the yokes of the universal joint, then remove snap ring.

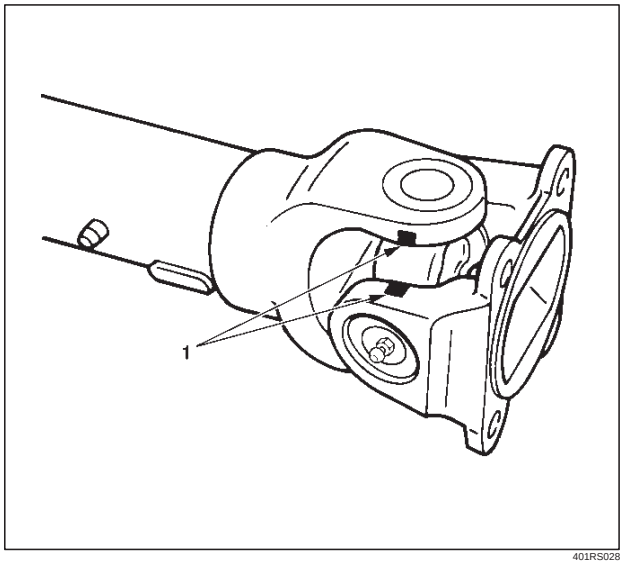

401RS028

2. Tap out the needle roller bearing by gently striking the shoulder of the yoke, using a mallet or a copper hammer.

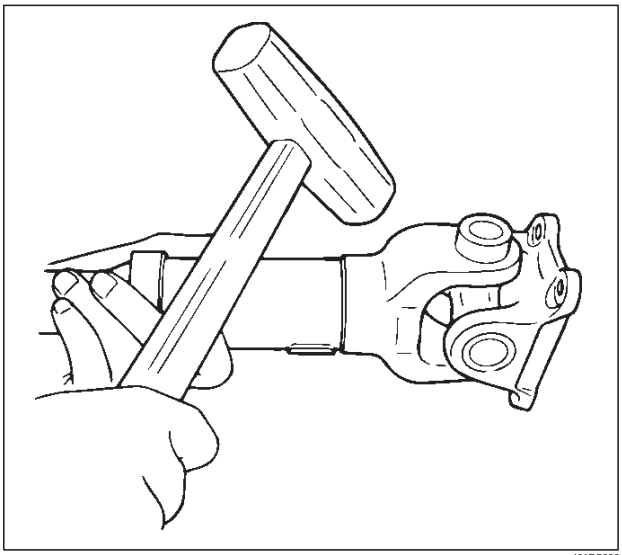

401RS006

Downloaded from www.Manualslib.com manuals search engine

3. Make sure of proper position for reinstallation by applying setting marks, then remove spider .

Inspection and Repair

Make necessary correction or parts replacement if wear, damage, corrosion or any other abnormal condition is found through inspection.

NOTE: When any part of the journal assembly (spider, needle roller bearing) requires replacement, be sure to replace the entire assembly.

Check the following parts for wear, damage, noise or any other abnormal conditions:

1. Spider
2. Needle roller bearing
3. Yoke
4. Flange
5. Constant velocity joint

Outside Diameter of Spider Pin

Standard: 17.00 mm (0.669 in)

Limit: 16.90 mm (0.665 in)

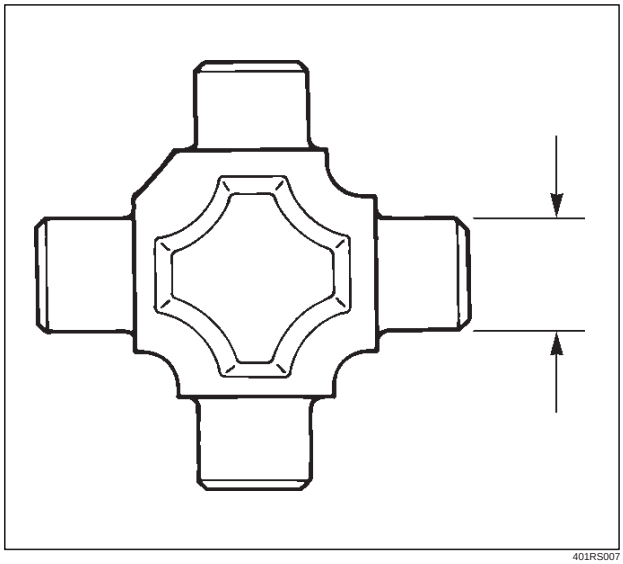

401RS007

Propeller Shaft Run–out

Support the ends of the propeller shaft on V-blocks (2) and check for run–out by holding the probe of a dial indicator (1) in contact with the center part of the shaft. If the amount of run–out is beyond the standard value for assembly, correct with a bench press or replace the shaft with a new propeller shaft assembly.

Standard: 0.3 mm (0.012 in)

Limit: 0.5 mm (0.02 in)

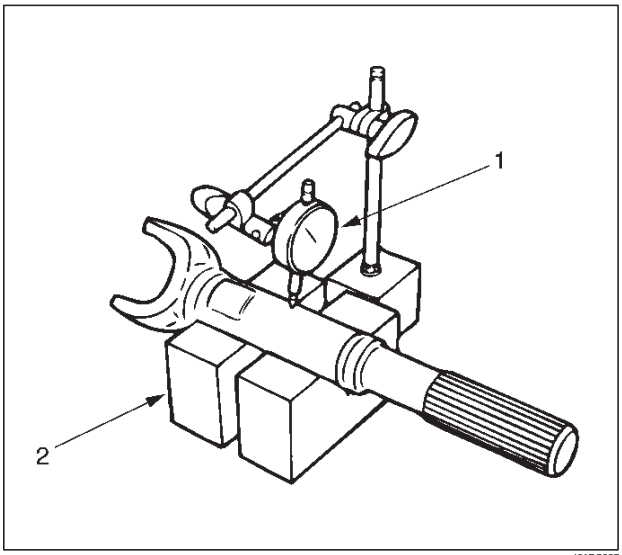

401RS027

Play in Splines in Normal Direction of Rotation

Check the amount of play between the sleeve yoke (1) and the propeller shaft spline (2) in the direction of rotation, using a pointed feeler gauge.

Standard: 0.073 – 0.156 mm (0.003 – 0.006 in)

Limit: 0.3 mm (0.012 in)

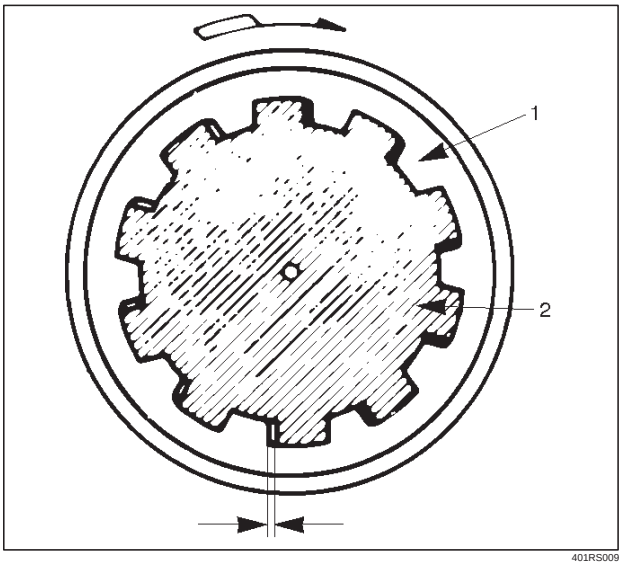

401RS009

Downloaded from www.Manualslib.com manuals search engine

Play in Universal Joint

Limit: Less than 0.1 mm (0.004 in)

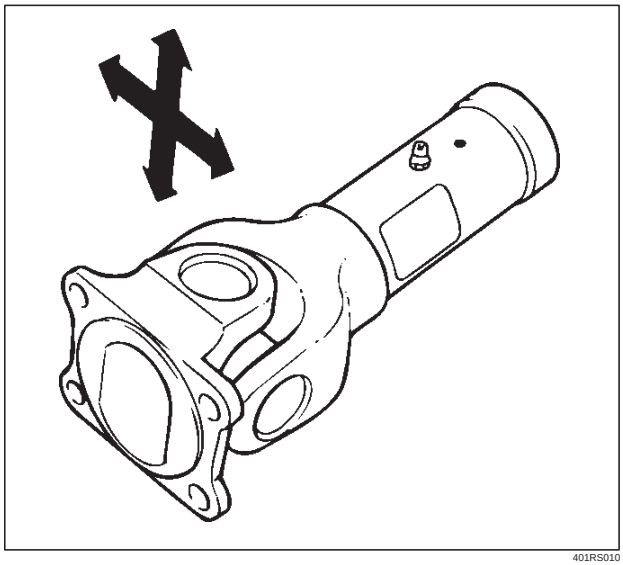

401RS010

Constant Velocity Joint

NOTE: LJ and BJ constant velocity joints are unremovable types. Check the joint for play and the boot for damage, wear, and leak of grease. If abnormality is found, replace propeller shaft as an assembly.

Play in Constant Velocity Joint

Fix the shaft in a vise throrgh pieces of wood, and try to move the joint vertically, right and left, and back and forth to make sure of smooth motions and no remarkable play.

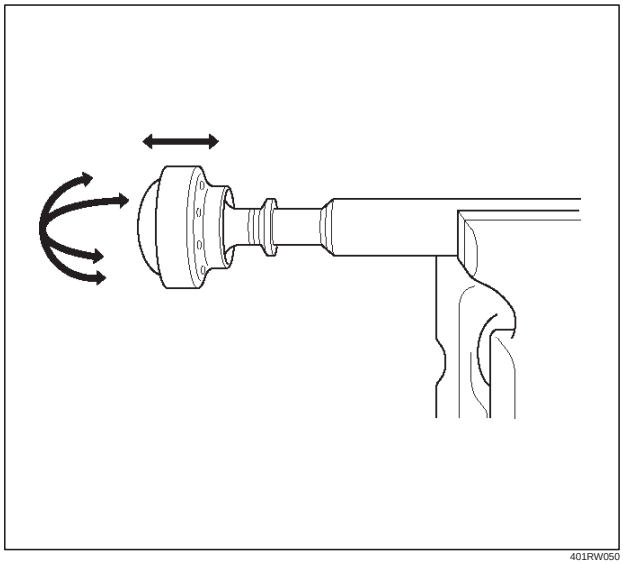

401RW050

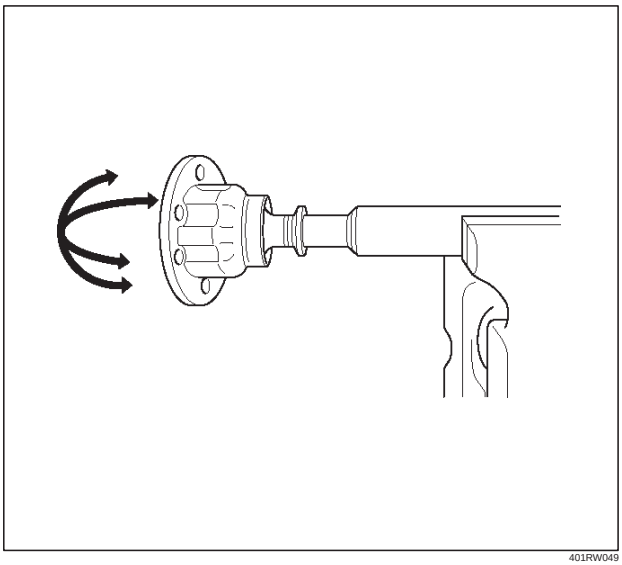

401RW049

Boot of Constant Velocity Joint

Check the boot (2) for crack, damage and grease leak, and the boot band (1) for loosening and damage. Check the both sides of the joint and make sure that there is no leak of grease from the cover press-in parts(3).

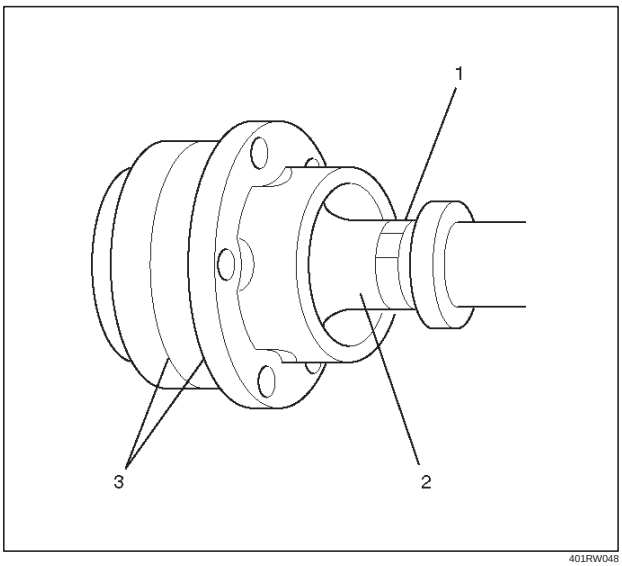

401RW048

Downloaded from www.Manualslib.com manuals search engine

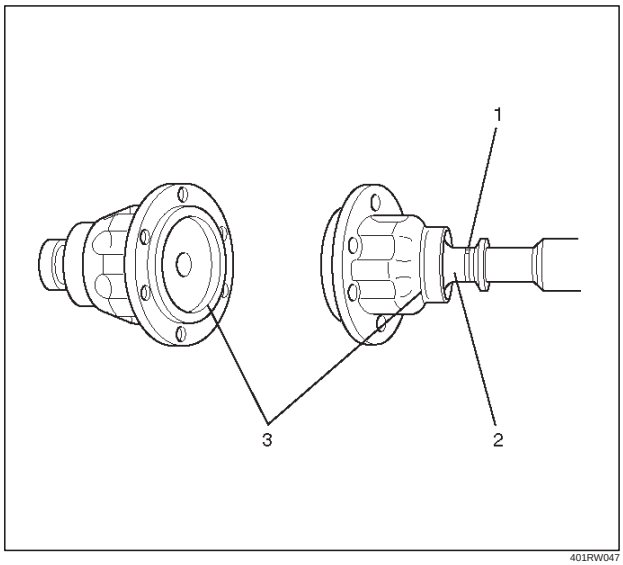

401RW047

Front Axle Flange Run-out

1. Set a dial gage at right angle near the outer circumference of the flange face and check the run-out of the flange face.

Limit: 0.15 mm (0.006 in)

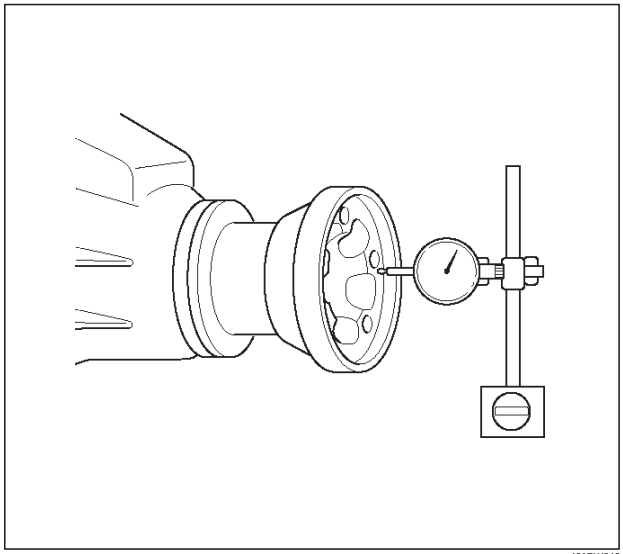

401RW046

2. Set a dial gage at right angle near the inner circumference and check the run-out of the flange.

Limit: 0.15 mm (0.006 in)

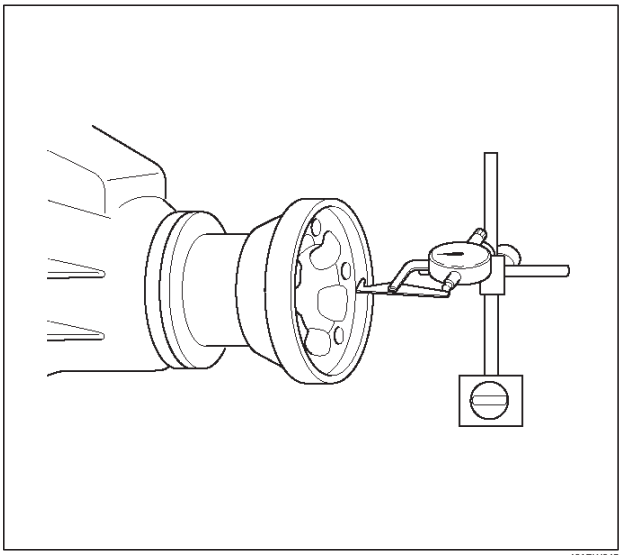

401RW045

3. If vibration is felt during the 4H AUTO drive, disconnct the propeller shaft at the front axle. Reinstall the propeller shaft at 60˚, 120˚, 180˚, 240˚, and 300˚ and conduct test drive in each position and check if there is vibration.

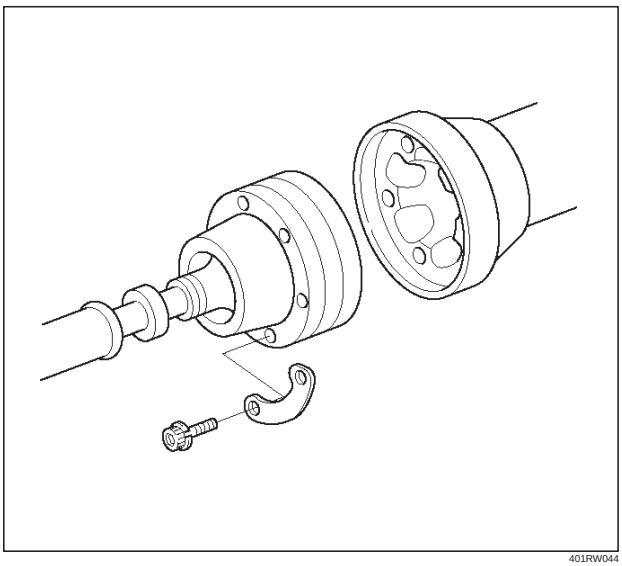

401RW044

Downloaded from www.Manualslib.com manuals search engine

Universal Joint Reassembly

1. Install spider to flange yoke. Be sure to install the spider by aligning the setting marks made during disassembly.
2. Apply a molybdenum–disulfide grease or a multi–purpose type grease NLGI No. 2 to inside of the bearing cap.

Grease Amount: Approx. 1.2 g (0.042 oz)

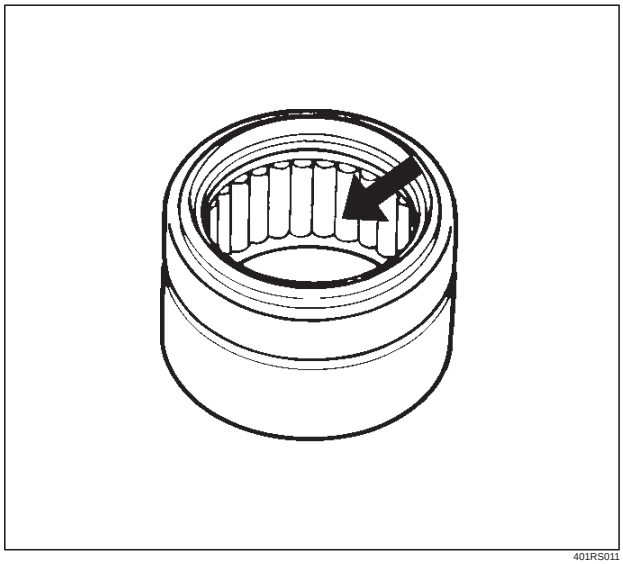

401RS011

3. Using either a mallet (or copper hammer) or a press, install the needle roller bearing into the yoke so that the snap ring can be installed in its groove.

CAUTION: The needle roller bearing cannot be installed smoothly if it is set at an incorrect angle with the flange and excessive hammering will damage the needle roller bearing.

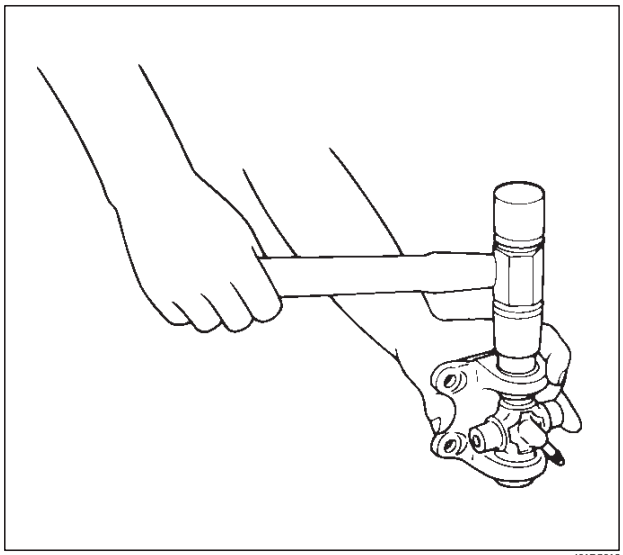

401RS012

4. Align setting marks (1) and join the yokes.

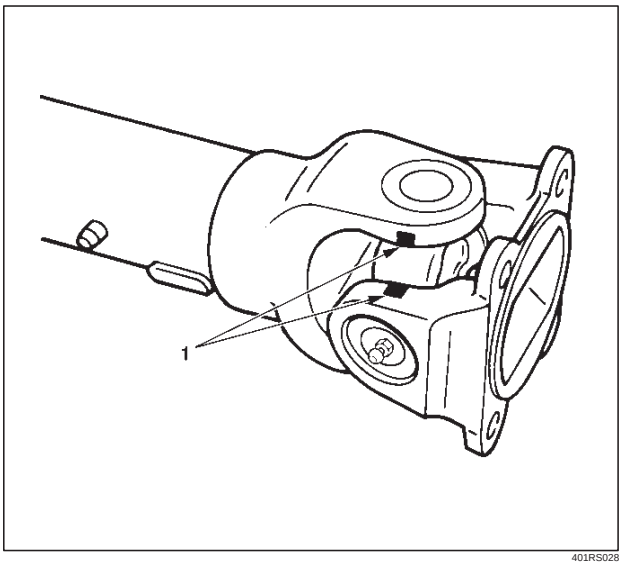

401RS028

5. Install snap ring.

NOTE: Discard used snap rings and install new ones.

When the bearing cap is in position, select and attach a snap ring of suitable thickness so that the end play of the spider pin is held within 0.1 mm (0.004 in).

Snap ring thickness and Identification color

1.5 mm (0.059 in); Blue

1.53 mm (0.060 in); White

1.59 mm (0.063 in); Yellow

1.62 mm (0.064 in); Green

1.68 mm (0.066 in); Not colored

NOTE: Be sure to use snap rings of the same thickness on both sides.

Downloaded from www.Manualslib.com manuals search engine

Reassembly (Except TOD 4×4)

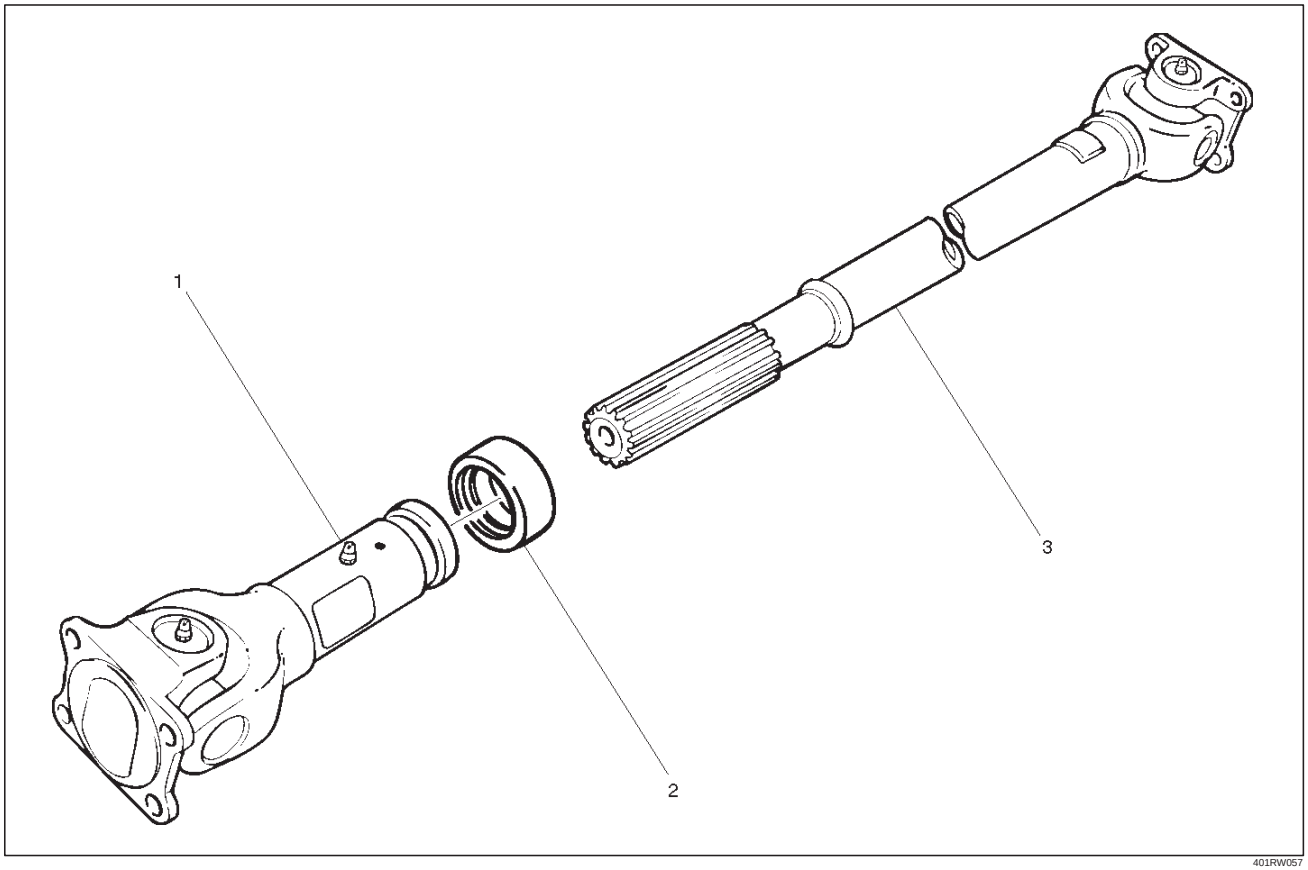

401RW057

Legend

(1) Sleeve Yoke
(2) Seal
(3) Tube Assembly

1. Discard used seal and install new one.
2. Align the alignment marks and install tube assembly to sleeve yoke.

Downloaded from www.Manualslib.com manuals search engine

Main Data and Specifications

General Specifications

Engine	6VE1(3.5 L)		
Transmission	M/T	A/T	A/T with TOD
Construction	Hollow steel tube with yoke and spider type universal joints.		Hollow steel tube with constant velocty joints.
Outside diameter	40.0 mm (1.57 in)	40.0 mm (1.57 in)	40.0 mm (1.57 in)
Length	559 mm (22.01 in)	559 mm (22.01 in)	577 mm (22.72 in)

Torque Specifications

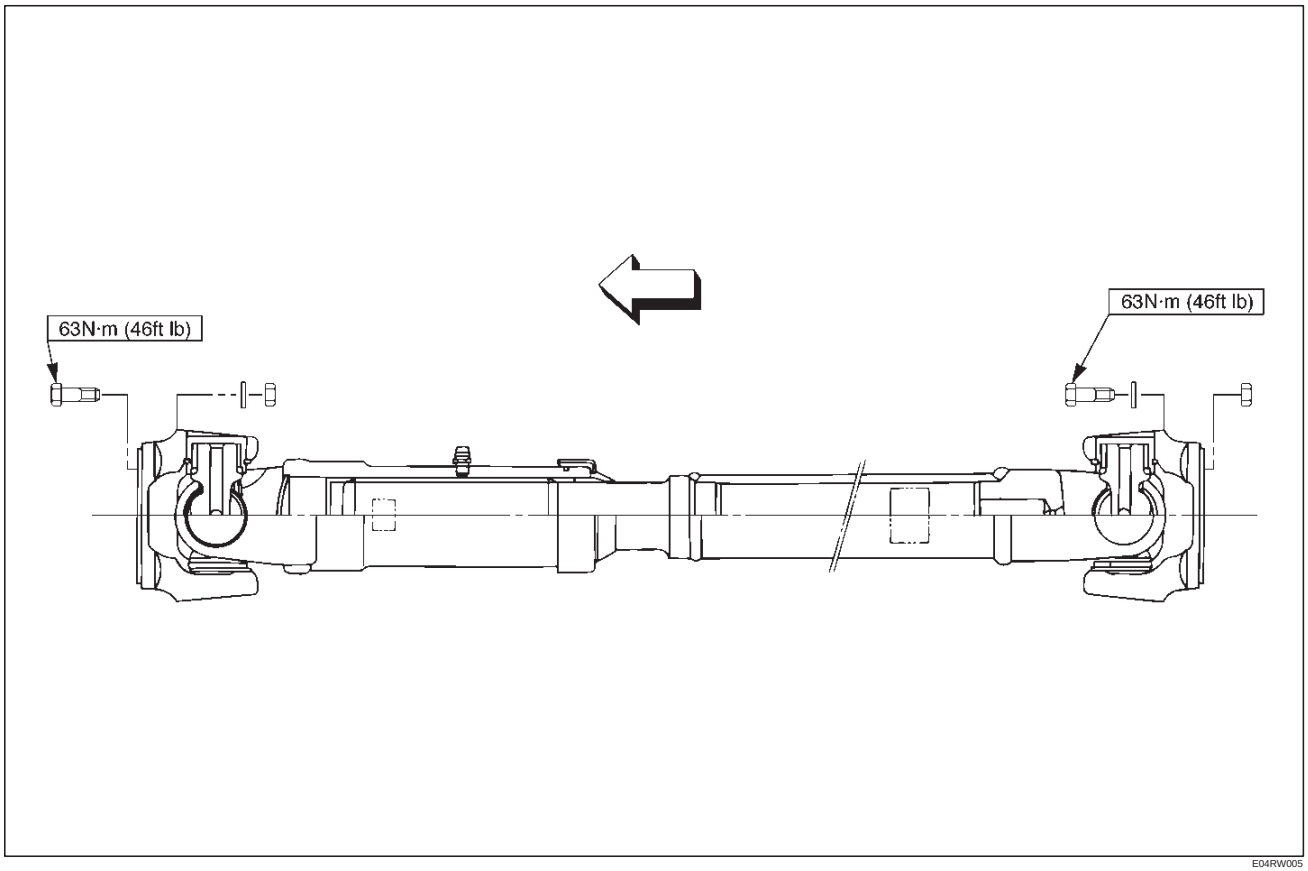

E04RW005

Downloaded from www.Manualslib.com manuals search engine

Rear Propeller Shaft

General Description

Since the propeller shaft is balanced carefully, welding or any other modifications are not permitted.

Alignment marks should be applied to each propeller shaft before removal.

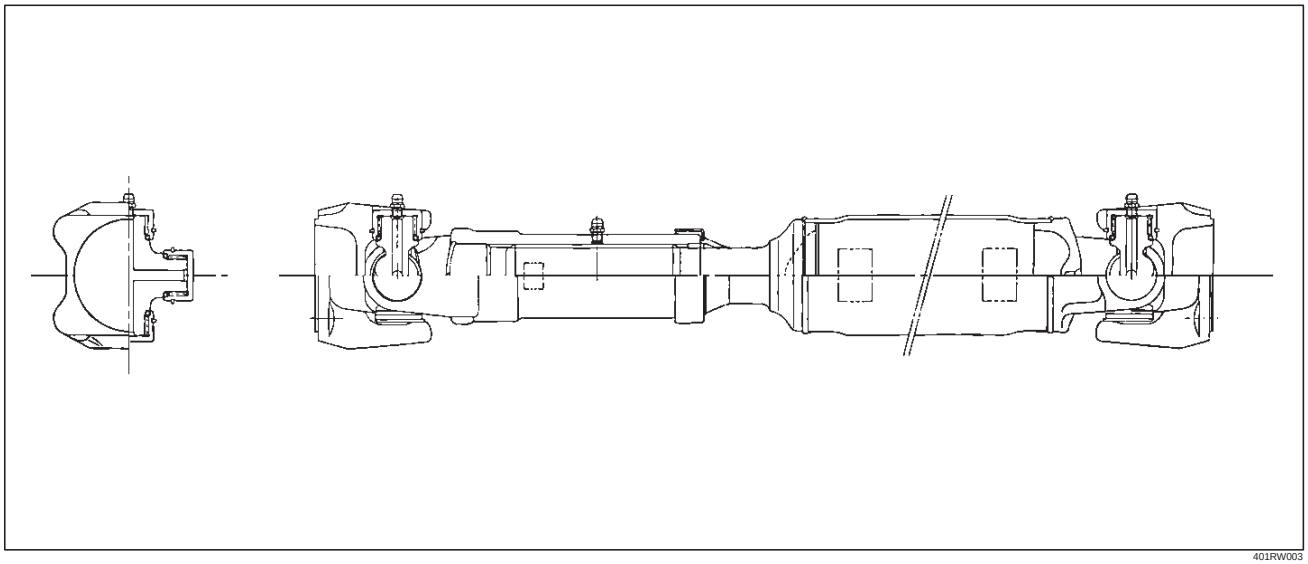

401RW003

Rear Propeller Shaft and Associated Parts

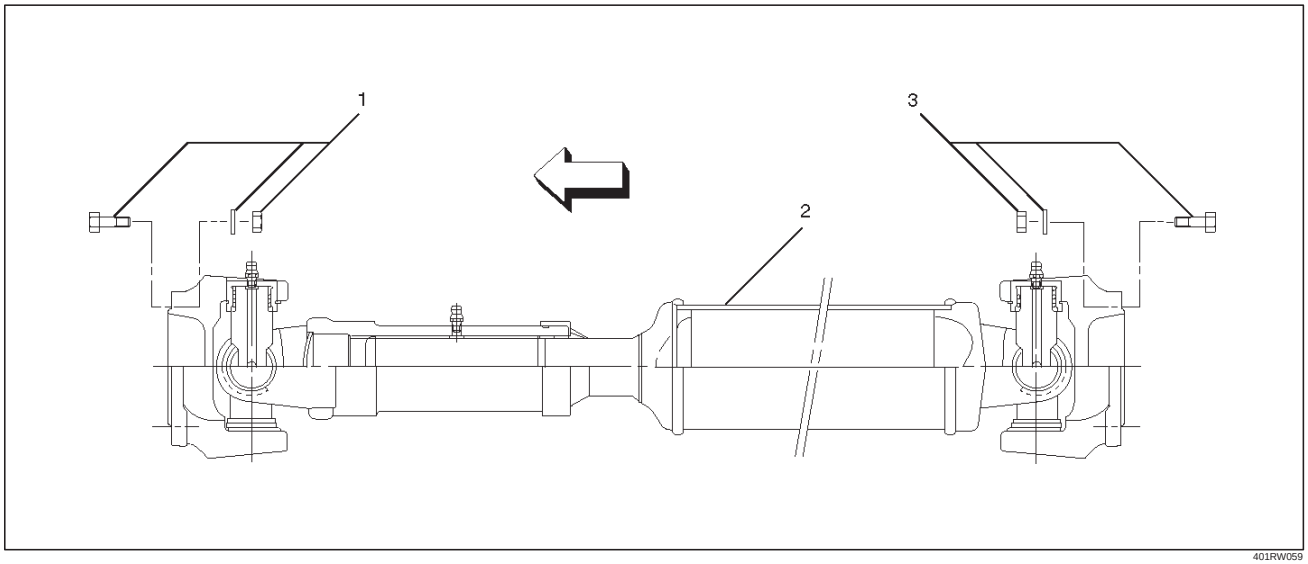

401RW059

Legend

(1) Bolt, Nut and Washer
(2) Rear Propeller Shaft
(3) Bolt, Nut and Washer

Removal

1. Jack up the vehicle and support it on the chassis stands.
2. Gear shift lever should be placed in neutral position and parking brake released.

NOTE: Apply alignment marks on the flange at the rear propeller shaft both front and rear side.

Downloaded from www.Manualslib.com manuals search engine

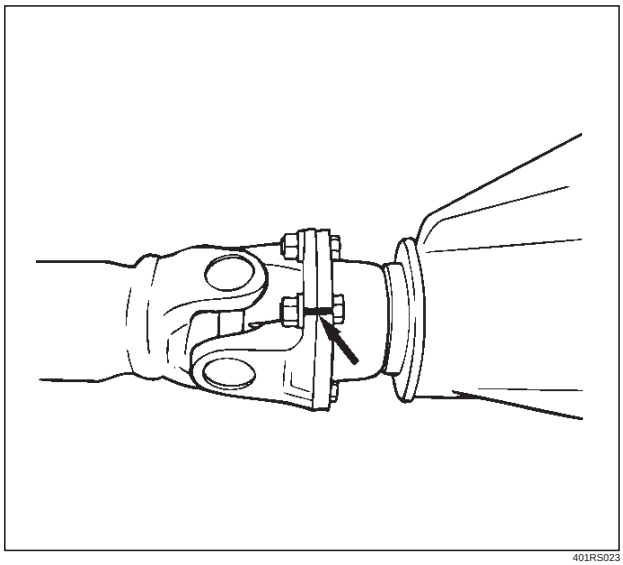

401RS023

3. Remove bolt, nut and washer (Rear axle side).
4. Remove bolt, nut and washer (Transfer side).
5. Remove rear propeller shaft.

Installation

NOTE: Never install the shaft assembly backwards.

1. Completely remove the black paint from the connecting surface of flange coupling on each end of propeller shaft. Clean so that no foreign matter will be caught in between.
2. Align the mark which is applied at removal .
   Install rear propeller shaft and tighten the bolts to the specified torque.

   Torque: 63 N·m (46 lb ft)
3. After installing the propeller shaft, be sure to apply black paint (1) to exposed area (other than connecting surface) of the entire surface of flange coupling .

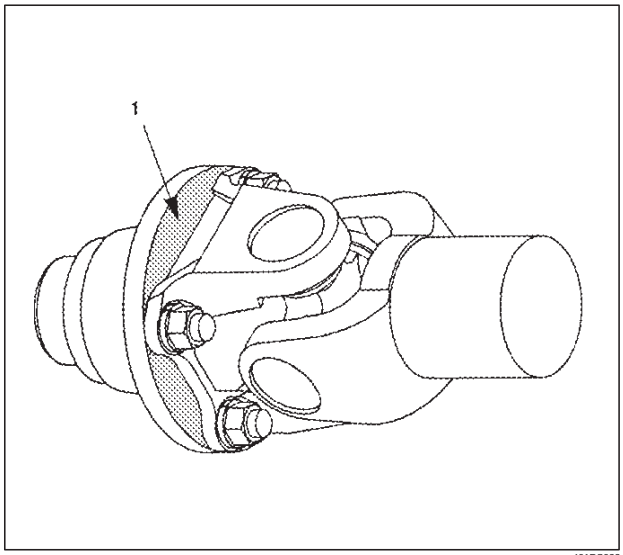

401RS022

Downloaded from www.Manualslib.com manuals search engine

Disassembly

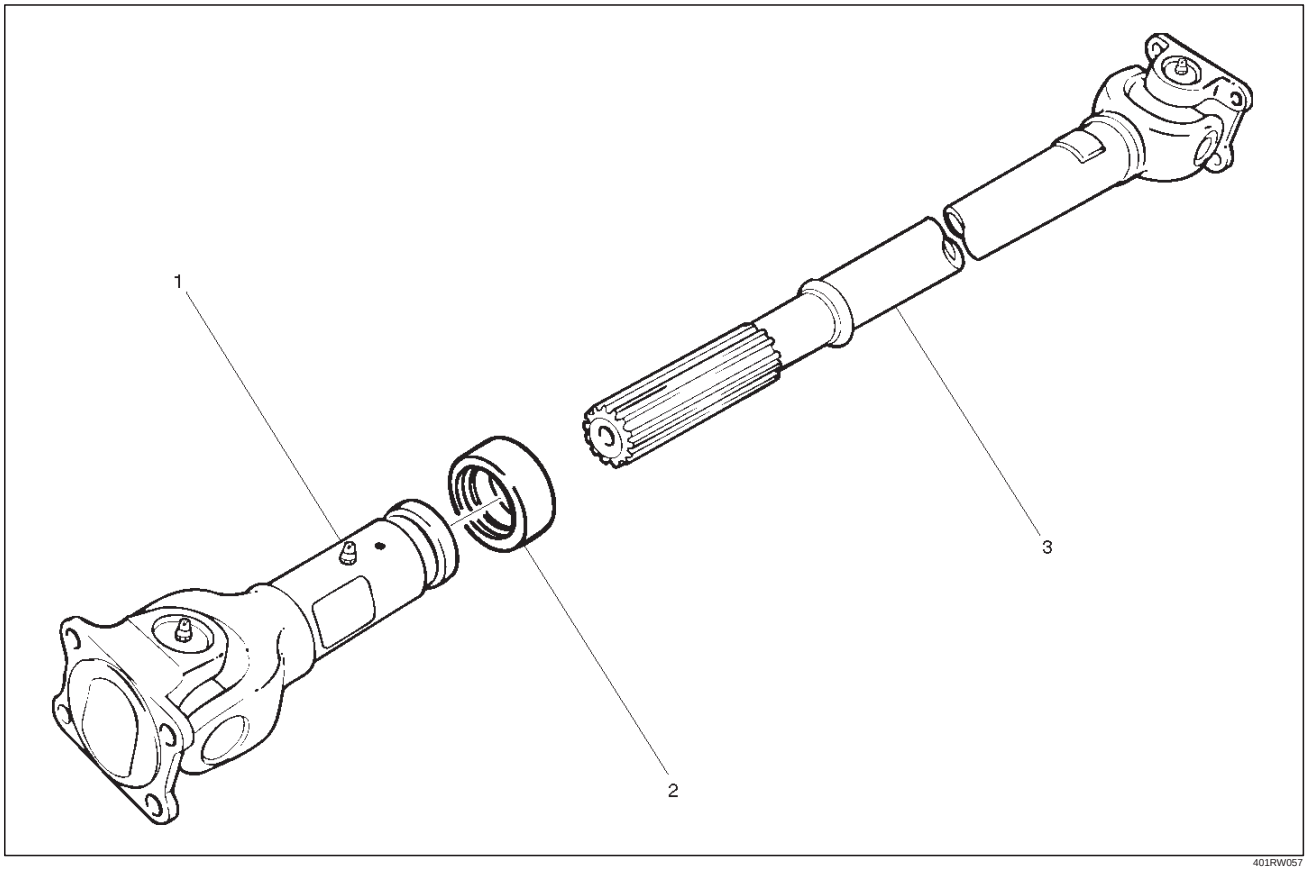

401RW057

Legend

(1) Sleeve Yoke
(2) Seal
(3) Tube Assembly

1. Apply alignment marks (1) on the sleeve yoke and tube assembly then remove sleeve yoke.

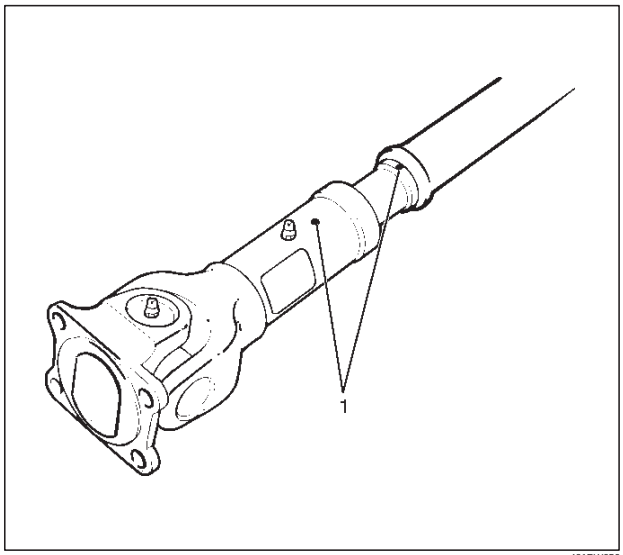

401RW056

2. Remove seal.
3. Remove tube assembly.

Downloaded from www.Manualslib.com manuals search engine

Universal Joint Disassembly

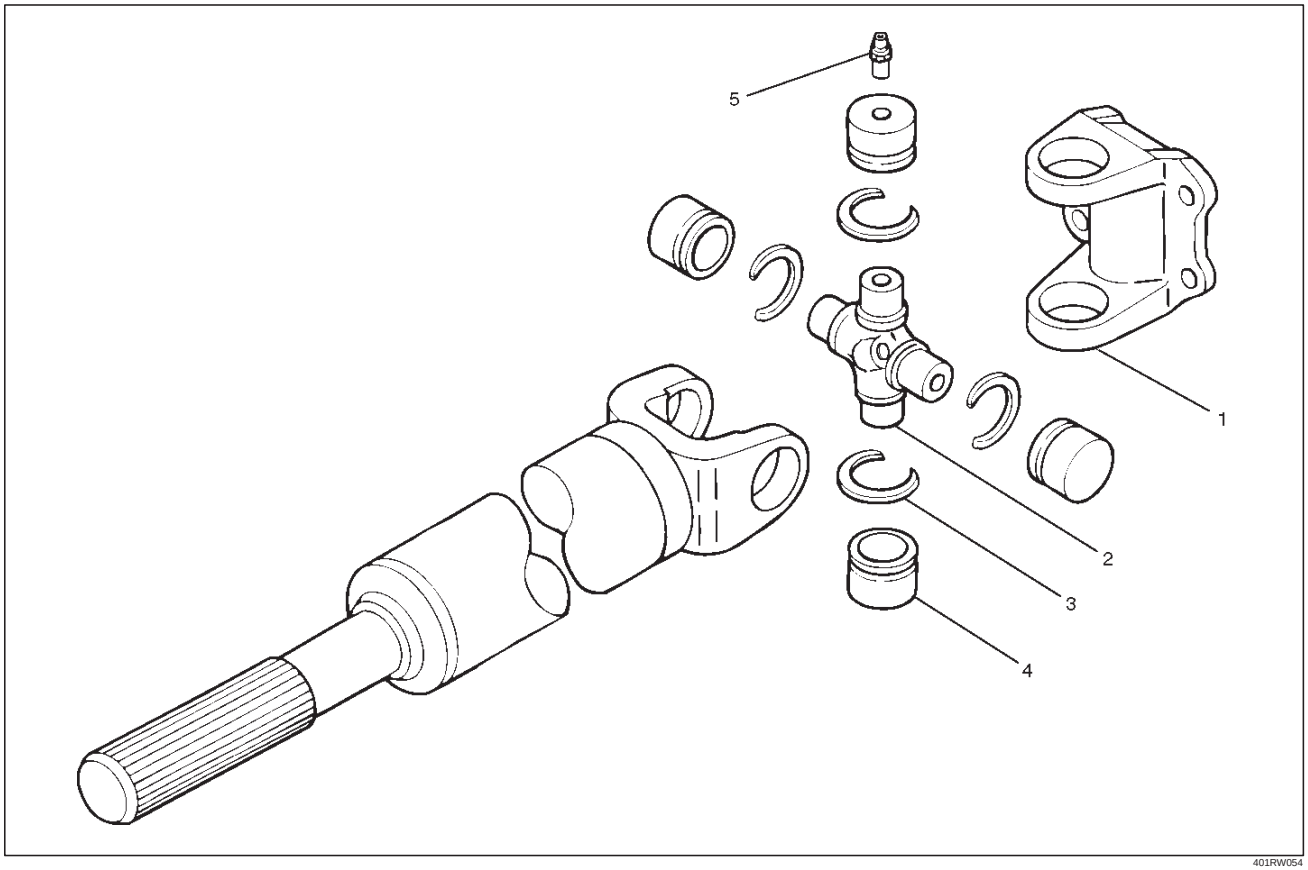

401RW054

Legend

(1) Flange Yoke
(2) Spider with Grease Fitting
(3) Snap Ring
(4) Needle Roller Bearing
(5) Grease Fitting

1. Apply alignment marks (1) on the yokes of the universal joint, then remove snap ring.

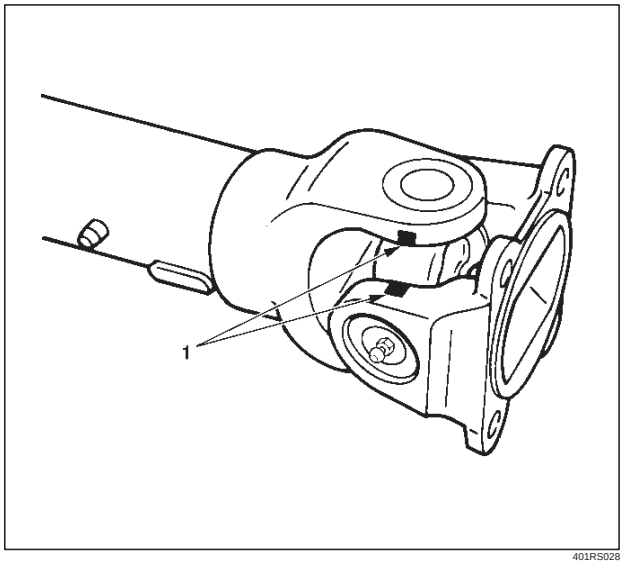

401RS028

2. Tap out the needle roller bearing by gently striking the shoulder of the yoke, using a mallet or a copper hammer.

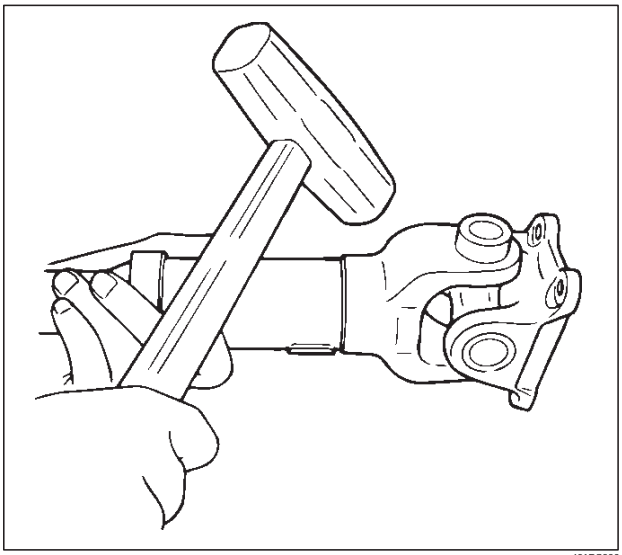

401RS006

Downloaded from www.Manualslib.com manuals search engine

3. Make sure of proper position for reinstallation by applying setting marks, then remove spider with grease fitting.

Inspection and Repair

Make necessary correction or parts replacement if wear, damage, corrosion or any other abnormal condition is found through inspection.

NOTE: When any part of the journal assembly (spider, needle roller bearing, grease fitting) requires replacement, be sure to replace the entire assembly.

Check the following parts for wear, damage, noise or any other abnormal conditions:

1. Spider
2. Needle roller bearing
3. Yoke
4. Flange

Outside Diameter of Spider Pin

Standard: 17.00 mm (0.669 in)

Limit: 16.90 mm (0.665 in)

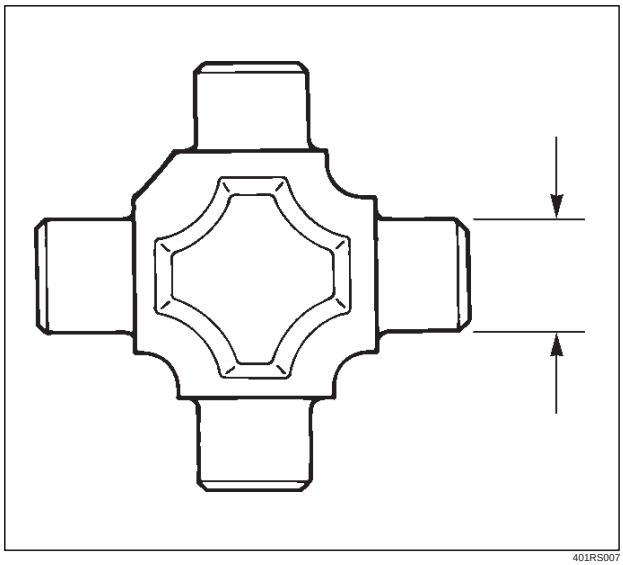

401RS007

Propeller Shaft Run-out

Support the ends of the propeller shaft on V-blocks (2) and check for run-out by holding the probe of a dial indicator (1) in contact with the center part of the shaft. If the amount of run-out is beyond the standard value for assembly, correct with a bench press or replace the shaft with a new propeller shaft assembly .

Standard: 0.3 mm (0.012 in)

Limit: 0.5 mm (0.02 in)

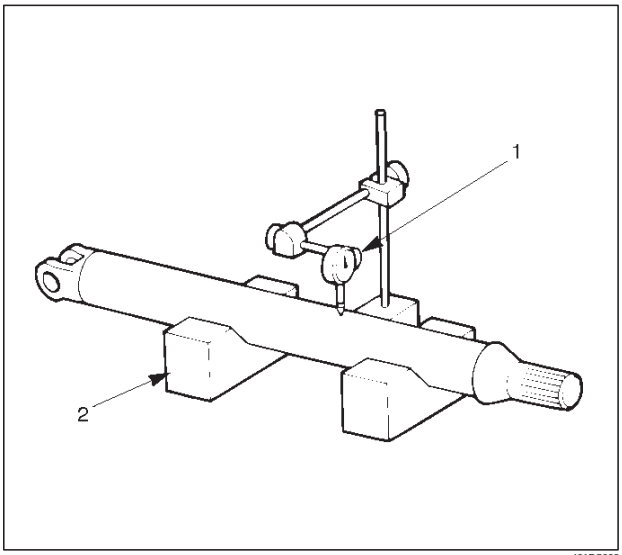

401RS008

Play in Splines in Normal Direction of Rotation

Check the amount of play between the sleeve yoke (1) and the propeller shaft spline (2) in the direction of rotation, using a pointed feeler gauge.

Standard: 0.073 – 0.156 mm (0.003 – 0.006 in)

Limit: 0.3 mm (0.012 in)

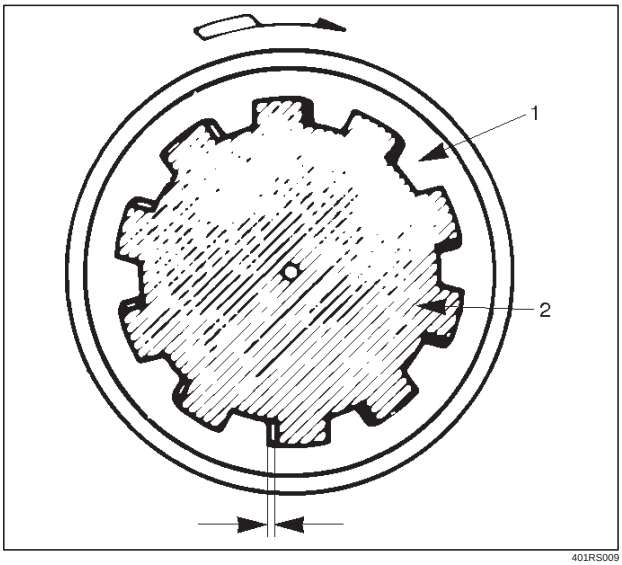

401RS009

Downloaded from www.Manualslib.com manuals search engine

Play in Universal Joint

Limit: Less than 0.1 mm (0.004 in)

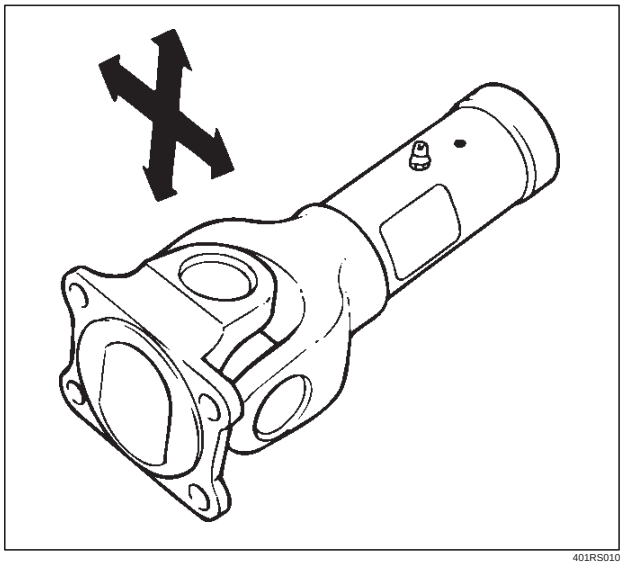

401RS010

Universal Joint Reassembly

1. Install spider to flange yoke. Be sure to install the spider by aligning the setting marks made during disassembly.
2. Before installing needle roller bearing, apply a molybdenum–disulfide grease or a multi–purpose type grease NLGI No. 2 to inside of the bearing cap.

Grease Amount: Approx. 1.2 g (0.042 oz)

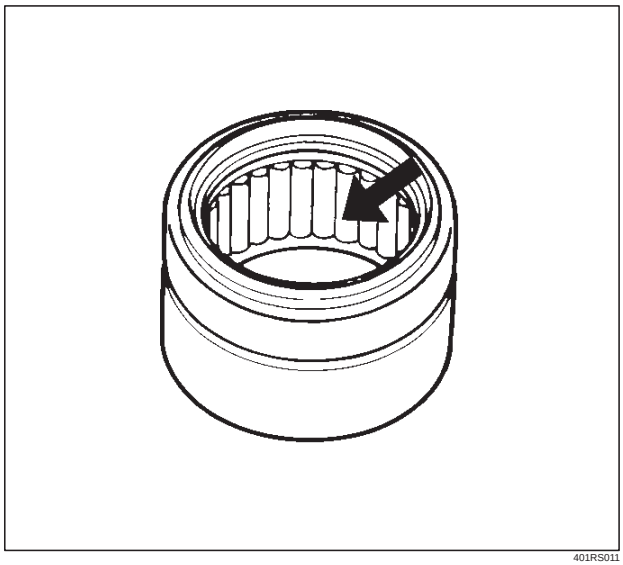

401RS011

3. Using either a mallet (or copper hammer) or a press, install the needle roller bearing into the yoke so that the snap ring can be installed in its groove.

CAUTION: The needle roller bearing cannot be installed smoothly if it is set at an incorrect angle with the flange and excessive hammering will damage the needle roller bearing.

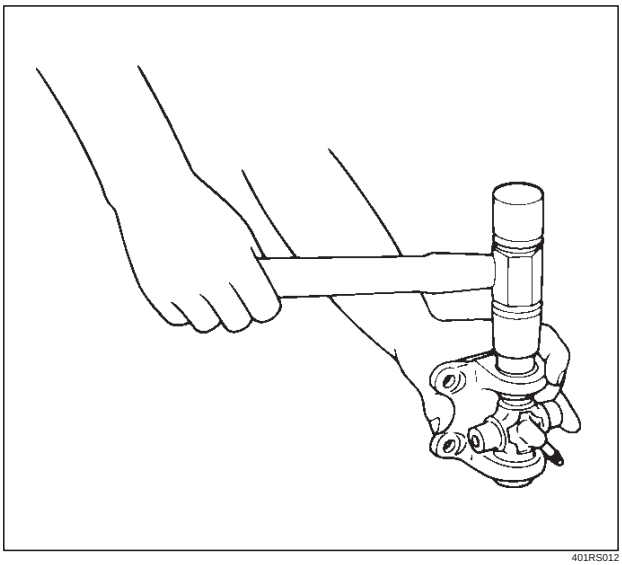

401RS012

4. Align setting marks (1) and join the yokes.

NOTE: Assemble the spider and spline yoke so that their grease fittings are arranged on the same side.

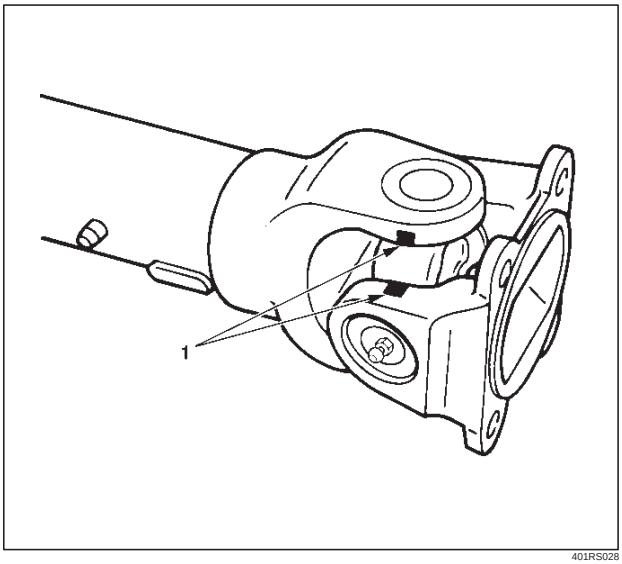

401RS028

5. Install snap ring.

NOTE: Discard used snap rings and install new ones.

When the bearing cap is in position, select and attach a snap ring of suitable thickness so that the end play of the spider pin is held within 0.1 mm (0.004 in).

Snap ring thickness and identification color
1.5 mm (0.059 in): Blue
1.545 mm (0.061 in): White
1.59 mm (0.063 in): Yellow
1.635 mm (0.064 in): Green
1.68 mm (0.066 in): Not colored

NOTE: Be sure to use snap rings of the same thickness on both sides.

Downloaded from www.Manualslib.com manuals search engine

Reassembly

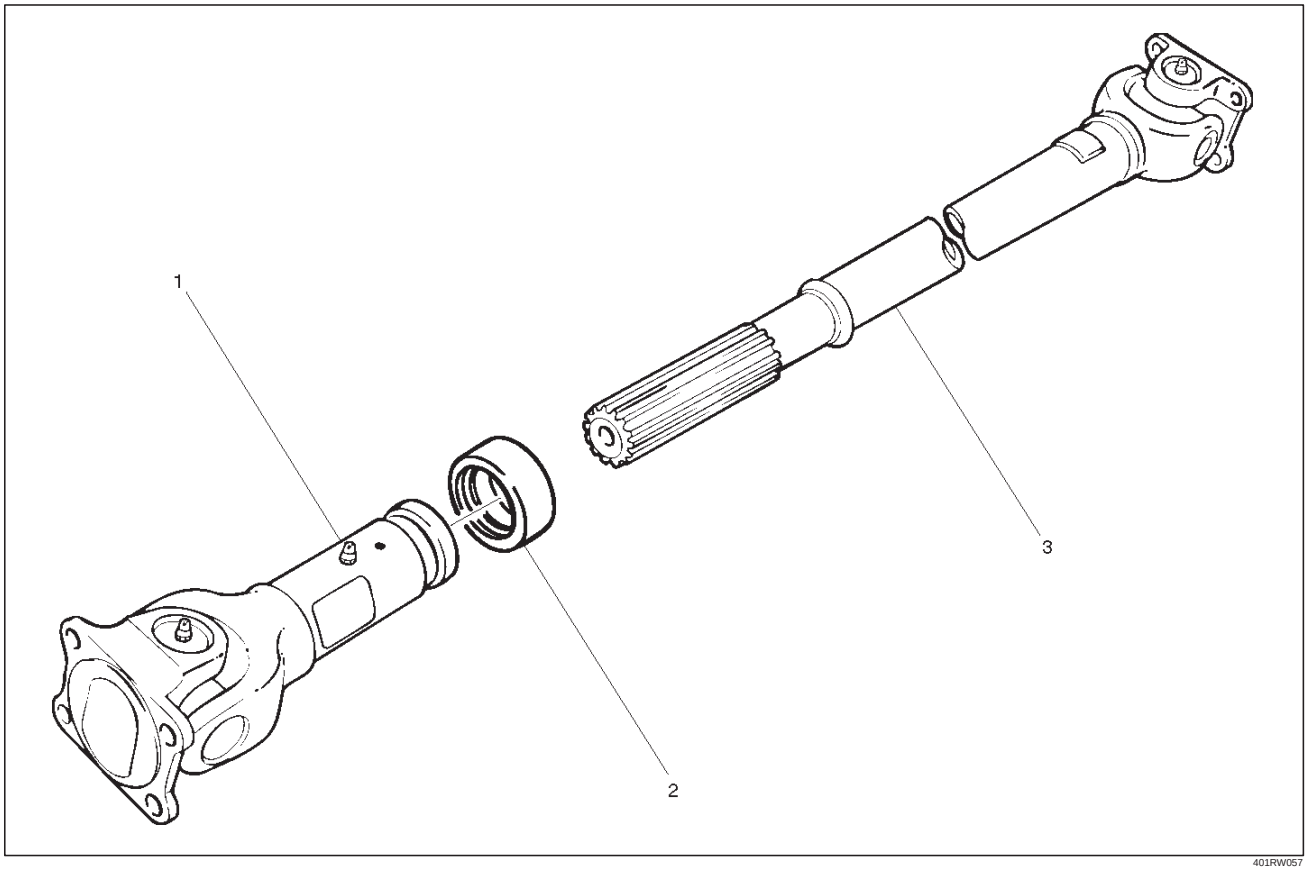

401RW057

Legend

(1) Sleeve Yoke
(2) Seal
(3) Tube Assembly

1. Discard used seal and install new one.
2. Align the alignment marks and install tube assembly to sleeve yoke.

Downloaded from www.Manualslib.com manuals search engine

Main Data and Specifications

General Specifications

Engine	6VE1(3.5 L)		
Transmission	M/T	A/T	A/T with TOD
Construction	Hollow steel tube with yoke and spider type universal joints.		
Outside diameter	68.9 mm (2.71 in)	68.9 mm (2.71 in)	68.9 mm (2.71 in)
Length	1093 mm (43.03 in)	1093 mm (43.03 in)	1075 mm (42.32 in)

Torque Specifications

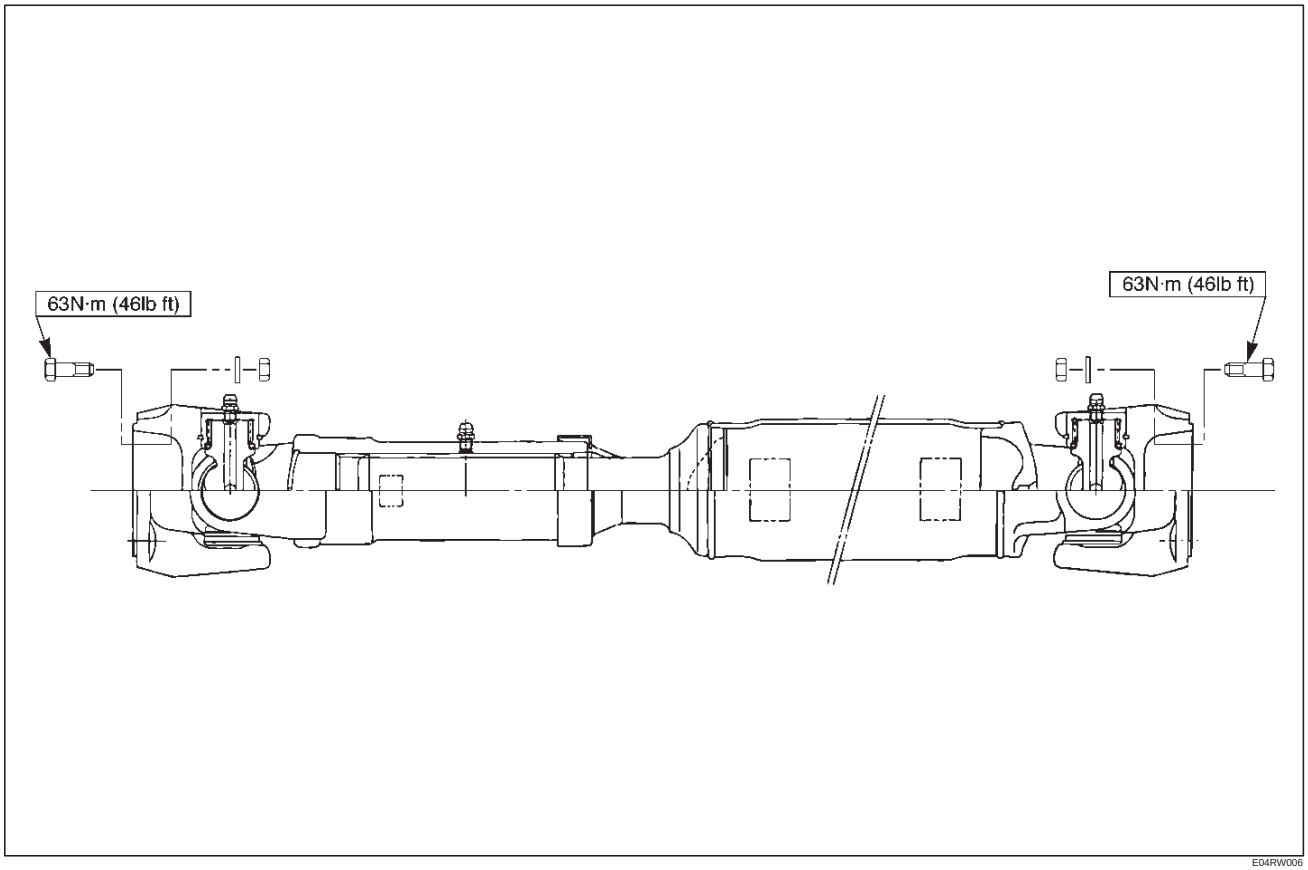

Downloaded from www.Manualslib.com manuals search engine

TROOPER

DRIVELINE/AXLE

TRANSFER CASE (STANDARD TYPE)

CONTENTS

Service Precaution 4D1–1
General Description 4D1–2
Transfer Rear Oil Seal 4D1–4
Removal 4D1–4
Installation 4D1–4
Transfer Case Assembly 4D1–5
Removal 4D1–5
Installation 4D1–5
Transfer Rear Case Assembly 4D1–7
Removal 4D1–7
Installation 4D1–8
Disassembly 4D1–11
Inspection and Repair 4D1–12
Reassembly 4D1–12
Detent, Shift Arm, and Interlock Pin (Transfer Case Assembly) 4D1–14
Disassembled View 4D1–14
Disassembly 4D1–14
Inspection and Repair 4D1–16
Reassembly 4D1–16
Transfer Case Assembly 4D1–18
Disassembled View 4D1–18
Disassembly 4D1–19
Inspection and Repair 4D1–21
Reassembly 4D1–25
Main Data and Specifications 4D1–31
Special Tools 4D1–34

Service Precaution

WARNING: THIS VEHICLE HAS A SUPPLEMENTAL RESTRAINT SYSTEM (SRS). REFER TO THE SRS COMPONENT AND WIRING LOCATION VIEW IN ORDER TO DETERMINE WHETHER YOU ARE PERFORMING SERVICE ON OR NEAR THE SRS COMPONENTS OR THE SRS WIRING. WHEN YOU ARE PERFORMING SERVICE ON OR NEAR THE SRS COMPONENTS OR THE SRS WIRING, REFER TO THE SRS SERVICE INFORMATION. FAILURE TO FOLLOW WARNINGS COULD RESULT IN POSSIBLE AIR BAG DEPLOYMENT, PERSONAL INJURY, OR OTHERWISE UNNEEDED SRS SYSTEM REPAIRS.

CAUTION: Always use the correct fastener in the proper location. When you replace a fastener, use ONLY the exact part number for that application. ISUZU will call out those fasteners that require a replacement after removal. ISUZU will also call out the fasteners that require thread lockers or thread sealant. UNLESS OTHERWISE SPECIFIED, do not use supplemental coatings (Paints, greases, or other corrosion inhibitors) on threaded fasteners or fastener joint interfaces. Generally, such coatings adversely affect the fastener torque and the joint clamping force, and may damage the fastener. When you install fasteners, use the correct tightening sequence and specifications. Following these instructions can help you avoid damage to parts and systems.

Downloaded from www.Manualslib.com manuals search engine

General Description

M/T model

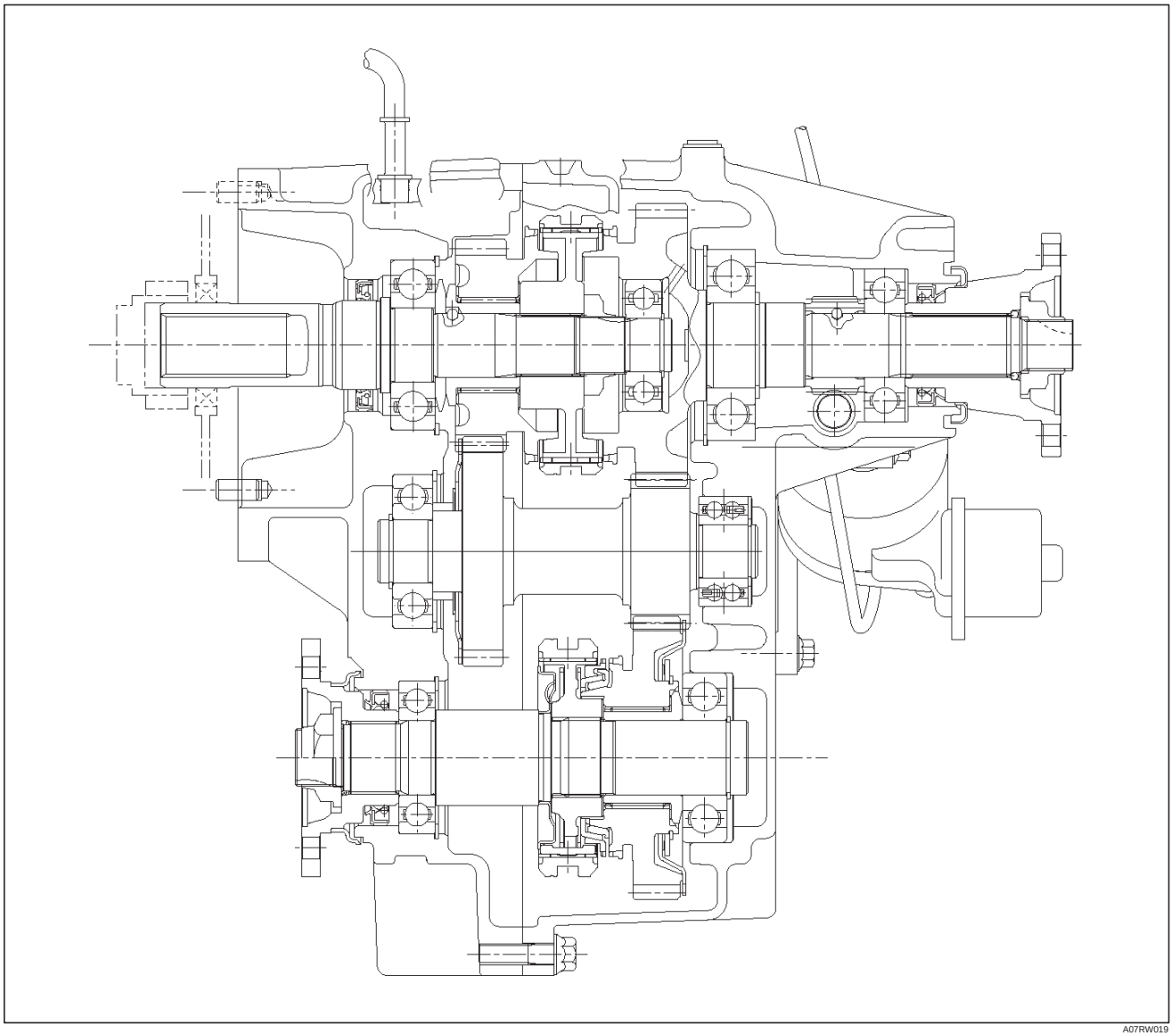

A07RW019

Downloaded from www.Manualslib.com manuals search engine

A/T model

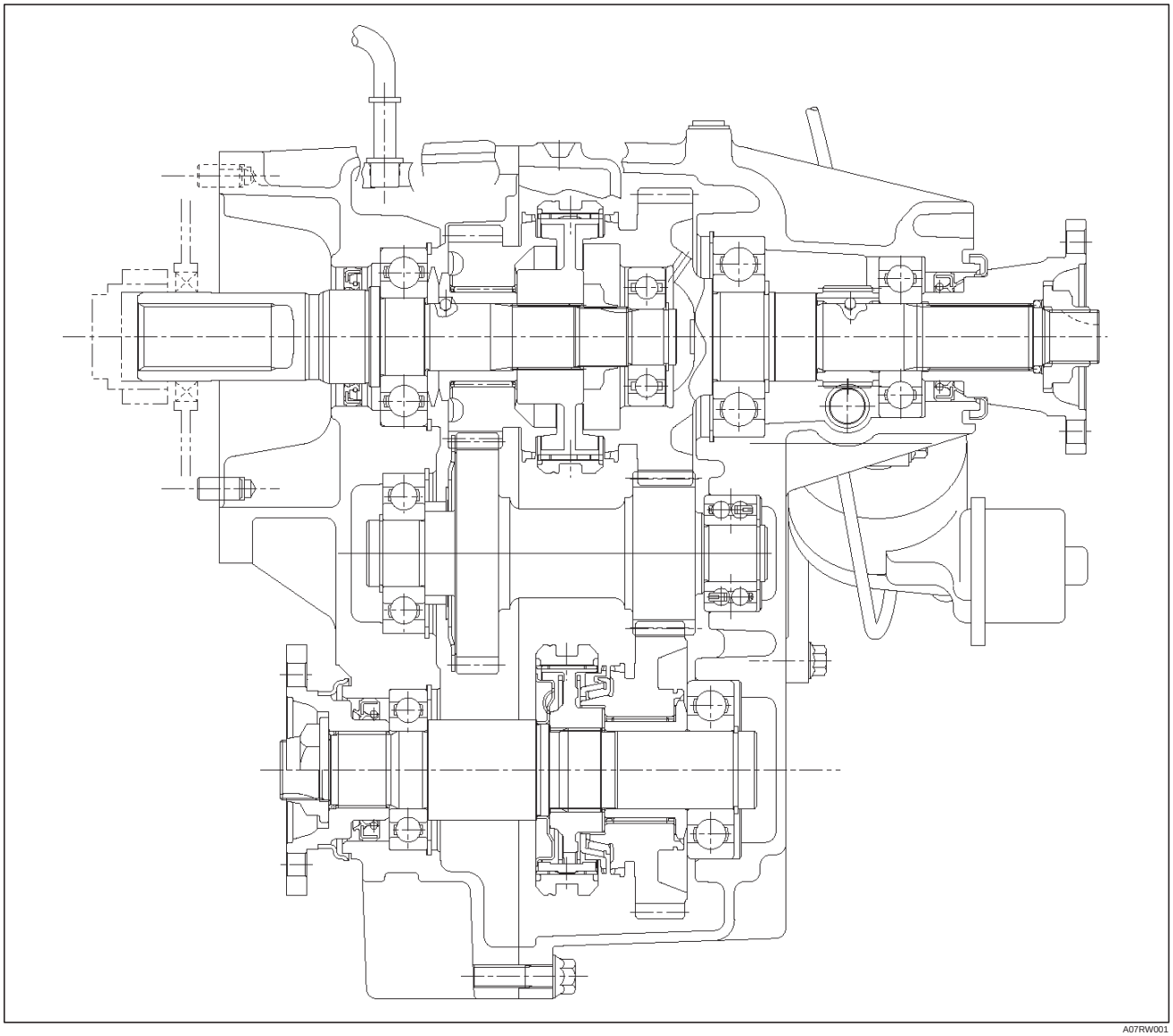

A07RW001

The transfer case is used to provide a means of providing power flow to the front axle. The transfer case also provides a means of disconnecting the front axle, providing better fuel economy and quieter operation when the vehicle is driven on improved roads where four wheel drive is not required. In addition, the transfer case provides an additional gear reduction when placed in low range, which is useful when difficult off–road conditions are encountered.

A floor mounted shift lever is used to select the operating range. When four wheel drive has been selected, the four wheel drive indicator light is designed to come on when the front axle has been engaged.

Downloaded from www.Manualslib.com manuals search engine

Transfer Rear Oil Seal

Removal

1. Disconnect the rear propeller shaft from the transfer case side.
2. Remove end nut and rear companion flange, use the companion flange holder J–8614–11 to remove the end nut.

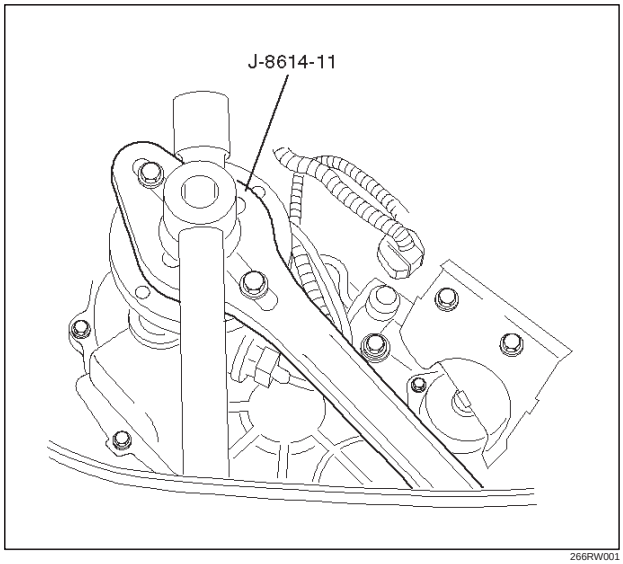

266RW001

3. Use the universal puller to remove the rear companion flange and O–ring.
4. Remove the oil seal from the transfer case.

Installation

To install, follow the removal steps in the reverse order, noting the following points:

1. Install oil seal and apply engine oil to the oil seal outer surfaces.
2. Apply the recommended grease (BESCO L2) or equivalent to the oil seal lip.
3. Use the oil seal installer J–39208 to install the rear seal to the transfer rear case.

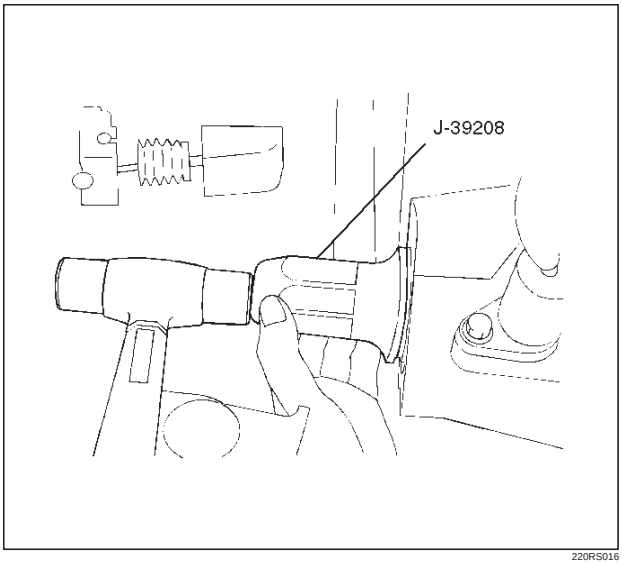

220RS016

4. Rear companion flange and end nut.
5. Install the rear companion flange and O–ring.
6. Use the companion flange holder J–37221 to install a new end nut and tighten to the specified torque.

   Torque: 167 N·m (123 lb ft)

7. Use the punch J–39209 to stake the end nut at two spots.

NOTE: Be sure to confirm that there is no crack at the staked portion of the end nut after staking.

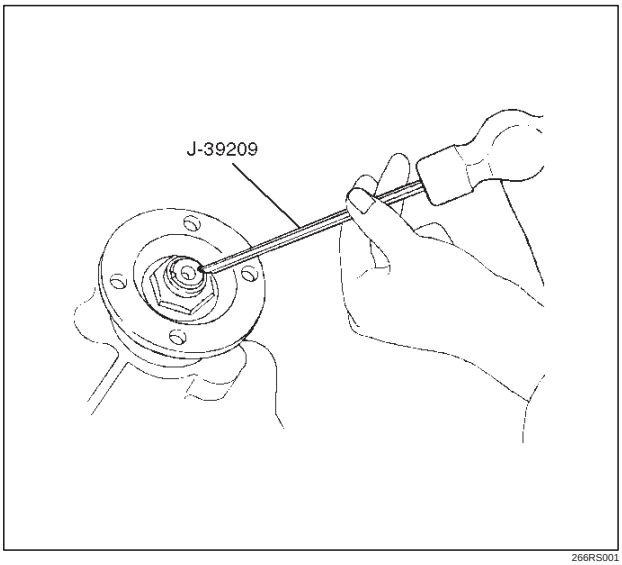

266RS001

Downloaded from www.Manualslib.com manuals search engine

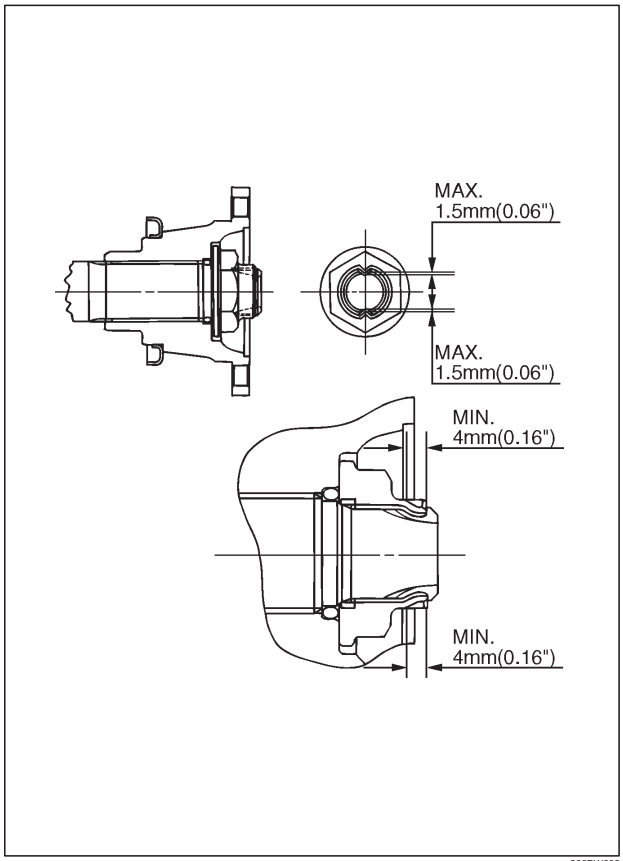

266RW002

8. Connect the rear propeller shaft to the transfer case and tighten to the specified torque.

Torque: 63 N·m 46 (lb ft)

Transfer Case Assembly

Removal

NOTE: Before removing transmission & transfer assembly from vehicle, change the transfer mode to 2WD by pushing button switch on dash panel.

1. Disconnect the battery ground cable.
2. Drain the transfer case fluid.
3. Remove transfer protector.
4. Remove rear propeller shaft.
5. Remove the rear and front propeller shaft from the transfer case side.
6. Disconnect the four oxygen sensor connectors from the transmission harness.
7. Remove the right and left catalytic converter assemblies and exhaust pipe.
8. Remove the transfer control lever knob.
9. Remove the selector lever assembly. Refer to Selector Lever in the Section 7A.
10. Remove transfer control lever.
11. Disconnect the 4WD switch and speed sensor harness connector and 2WD–4WD actuator harness connector from the transmission harness.
12. Remove transmission–transfer bolt and support the transfer case with a transmission jack.
13. Remove four transmission–transfer bolts and the three nuts.
14. Remove the transfer case assembly from the vehicle.

Installation

To install, follow the removal steps in the reverse order, noting the following points:

1. Install transfer case assembly and apply a thin coat of molybdenum disulfide grease to the input shaft spline.

Downloaded from www.Manualslib.com manuals search engine

2. Tighten the transmission–transfer bolt to the specified torque.

   Torque: 46 N·m (34 lb ft)

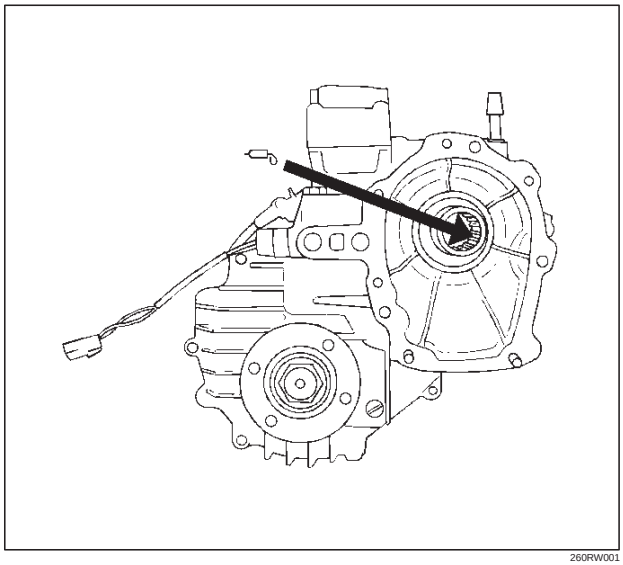

260RW001

3. Tighten the exhaust pipe to exhaust manifold bolt to the specified torque.

   Torque: 67 N·m (49 lb ft)

4. Tighten the exhaust pipe flange bolt to the specified torque.

   Torque: 43 N·m (32 lb ft)

5. Tighten the propeller shaft bolt to the specified torque.

   Torque: 63 N·m (46 lb ft)

6. Tighten the transfer protector bolt to the specified torque.

   Torque: 37 N·m (27 lb ft)

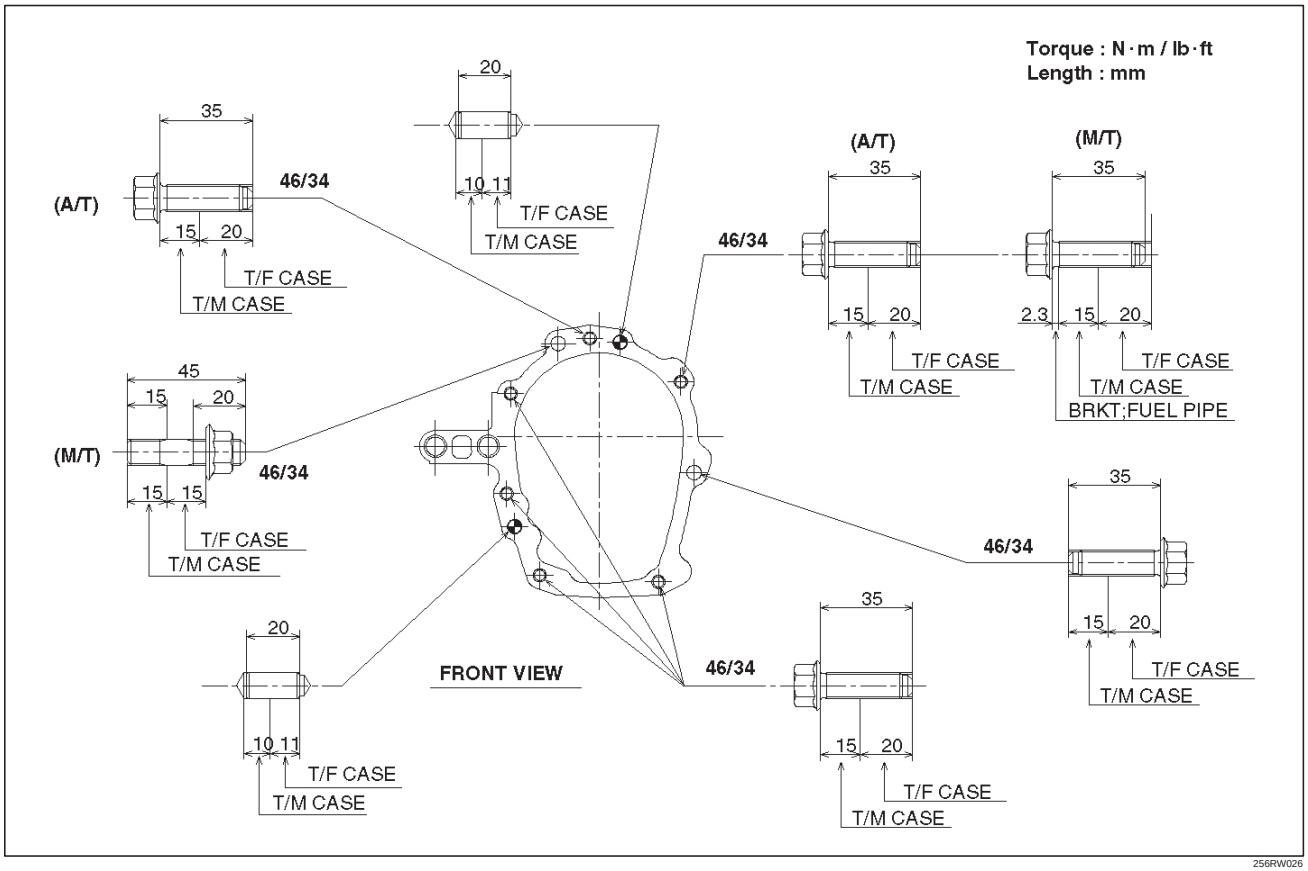

256RW026

Downloaded from www.Manualslib.com manuals search engine

Transfer Rear Case Assembly

Removal

1. Remove the speedometer sensor.
2. Remove the plate.
3. Remove the speedometer driven gear bushing and driven gear.

NOTE: Apply a reference mark to the driven gear bushing before removal.

4. Remove front companion flange.
5. Remove rear companion flange, use the flange companion holder J–8614–11 to remove the end nut.

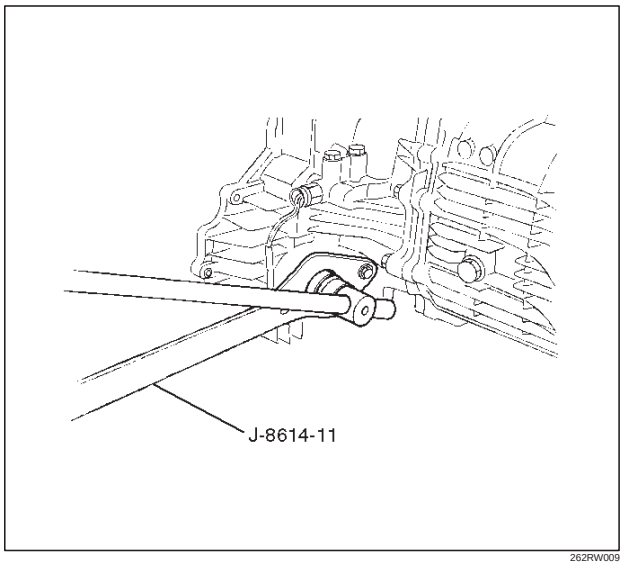

262RW009

6. Remove the front and rear companion flange.

NOTE: Use the universal puller to remove the rear companion flange.

7. Remove control box assembly.
8. Disconnect the actuator breather hose from the 2WD–4WD actuator assembly.

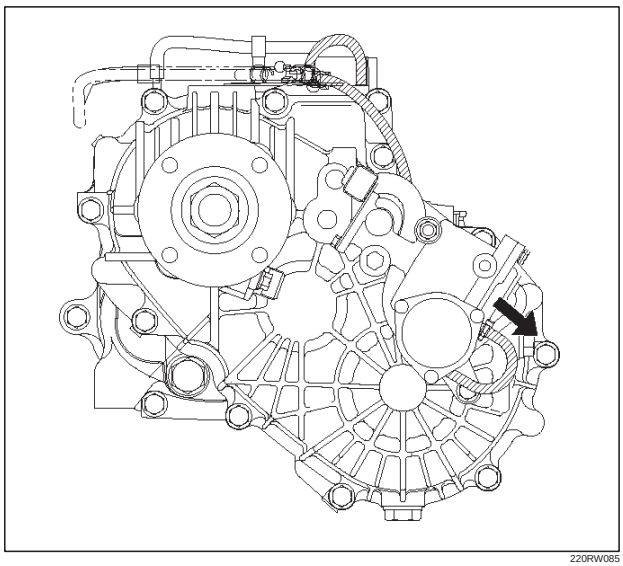

220RW085

9. Remove the 2WD–4WD actuator assembly bolts.
10. Pull the 2WD–4WD actuator assembly with 2WD–4WD shift rod.

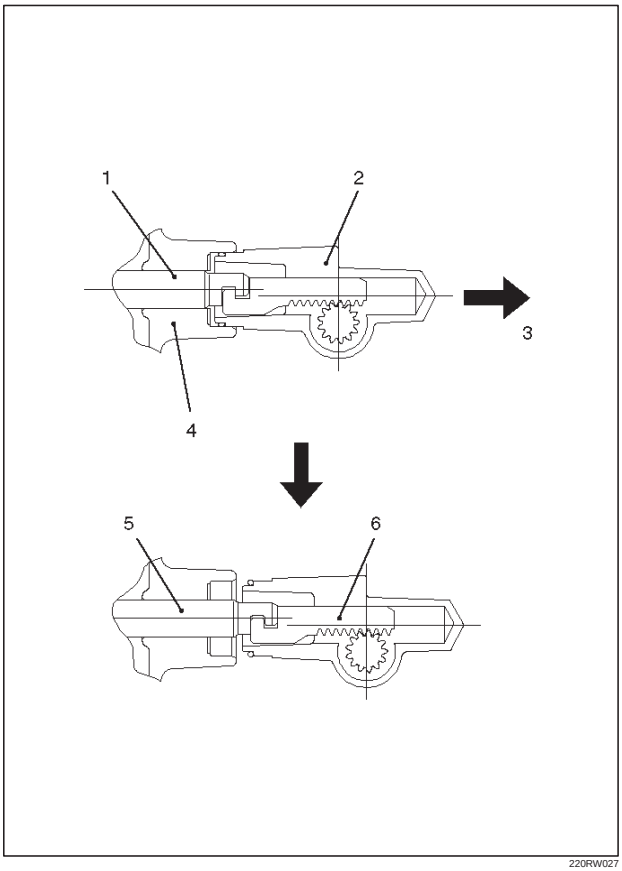

220RW027

Legend

(1) Shift Rod: 2WD–4WD (Position: 2WD)
(2) 2WD–4WD Actuator Assembly
(3) Pull
(4) Rear Case Assembly
(5) Position: 4WD
(6) Mode: 2WD

Downloaded from www.Manualslib.com manuals search engine

11. Off set the actuator assembly.

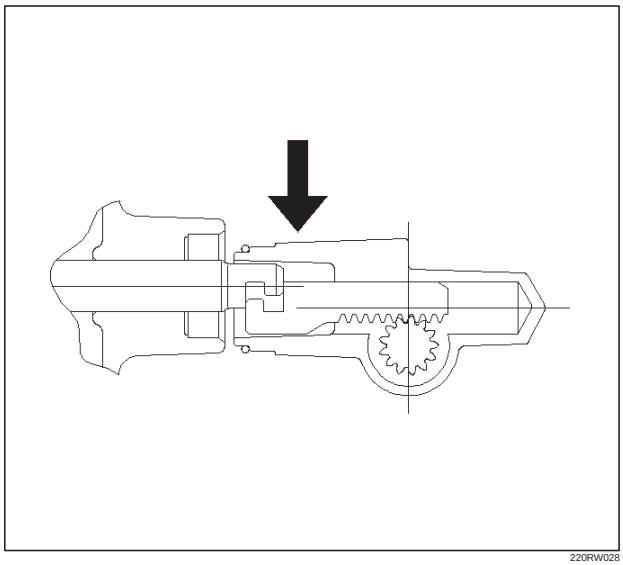

220RW028

12. Remove the actuator assembly.

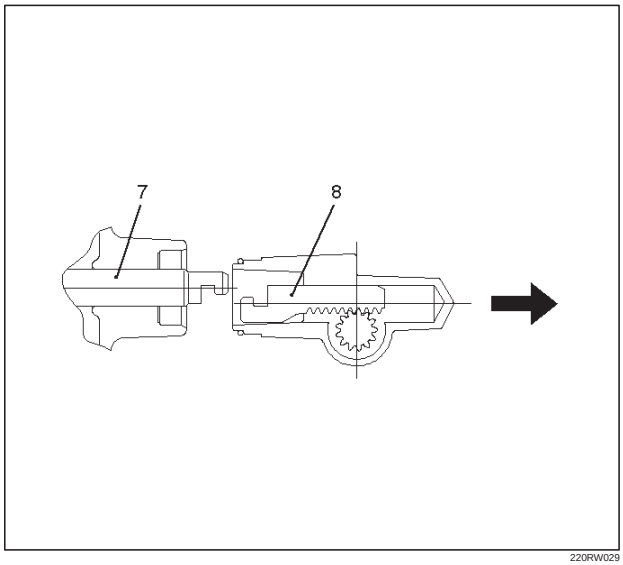

220RW029

Legend

(7) Position: 4WD
(8) Mode: 2WD

13. Remove transfer case assembly.
14. Remove transfer rear case assembly.

Installation

1. Install transfer rear case assembly.
2. Install transfer case assembly and apply the recommended liquid gasket (LOCTITE 17430) or its equivalent to the transfer rear case fitting faces.

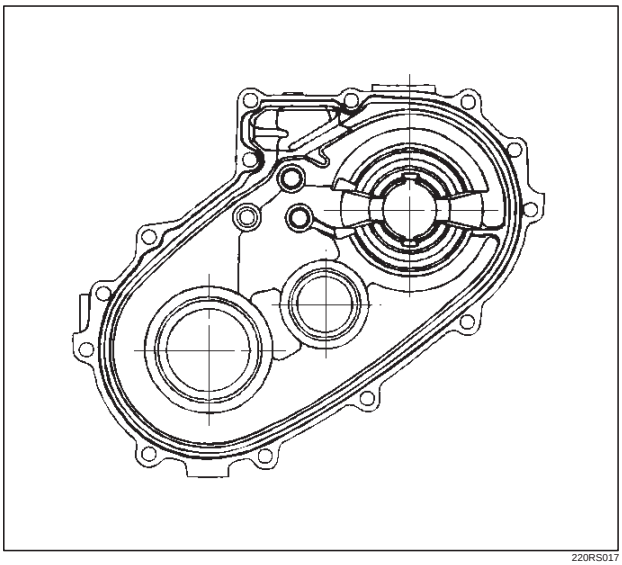

220RS017

3. Perform the following steps before fitting the transfer rear case:
   1. Shift the high–low shift to the 4H side.
   2. Turn the select rod counterclockwise so that the select block projection A may enter into the 2WD–4WD shift block.
   3. The cut–away portion of the select rod head (9) should align with that of the rear case hole's stopper (10).

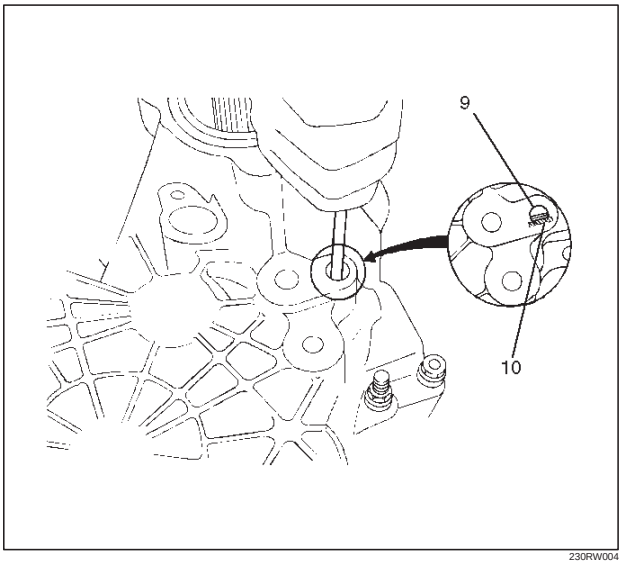

230RW004

4. Tighten the transfer rear case bolts to the specified torque.

   Torque: 37 N·m (27 lb ft)

5. Shift the 2WD–4WD shift rod (11) to the 4WD side.

Downloaded from www.Manualslib.com manuals search engine

6. Join the rod grooves of 2WD–4WD actuator assembly (12) and shift rod (11).

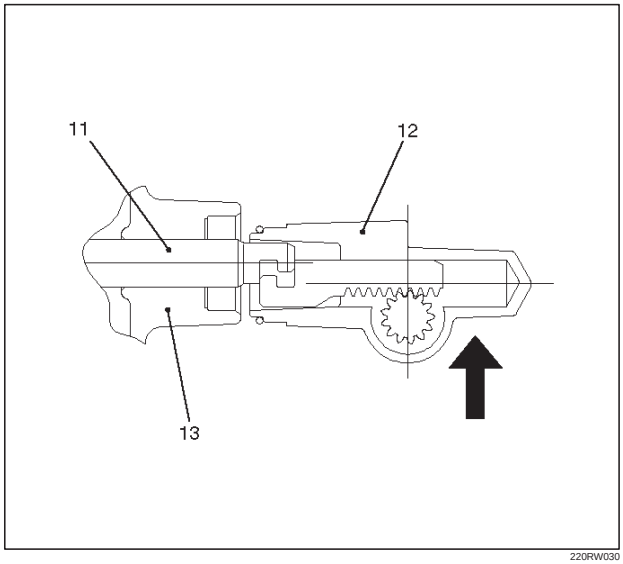

220RW030

Legend

(11) Shift Rod: 2WD–4WD (Position: 4WD)
(12) 2WD–4WD Actuator Assembly (Mode: 2WD)
(13) Rear Case Assembly

7. Push the 2WD–4WD actuator assembly (12) with 2WD–4WD shift rod (11) till the shift rod (11) reaches the 2WD position.

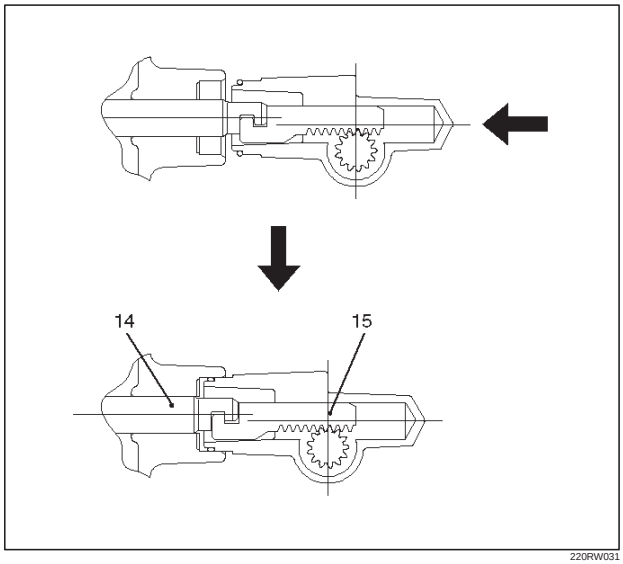

220RW031

Legend

(14) Position: 2WD
(15) Mode: 2WD

8. Tighten the 2WD–4WD actuator bolts to the specified torque.

   Torque: 19 N·m (14 lb ft)

9. Connect the actuator breather hose to actuator.
10. Install control box assembly.

   Torque: 19 N·m (14 lb ft)

11. Install rear companion flange.
12. Install front companion flange, use the companion flange holder J–8614–11 to tighten the flange nuts to the transfer case.

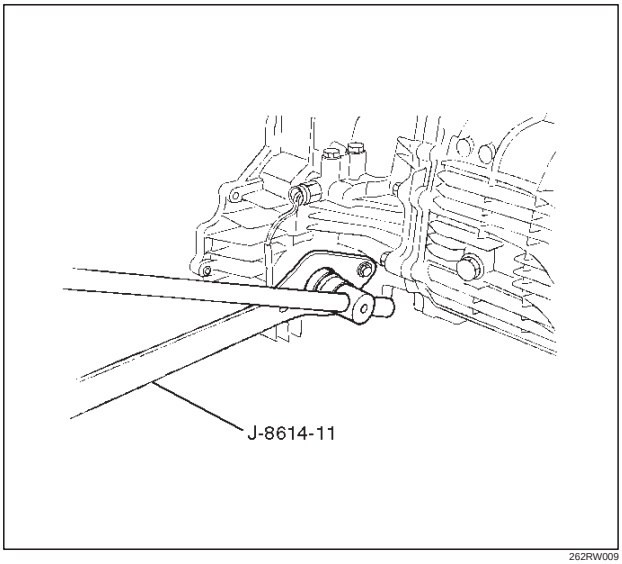

262RW009

13. Tighten the new transfer flange nuts to the specified torque.

   Torque

   Rear companion flange: 167 N·m (123 lb ft)

   Front companion flange: 137 N·m (101 lb ft)

14. Use the punch J–39209 to stake the rear companion flange nut at two spots.

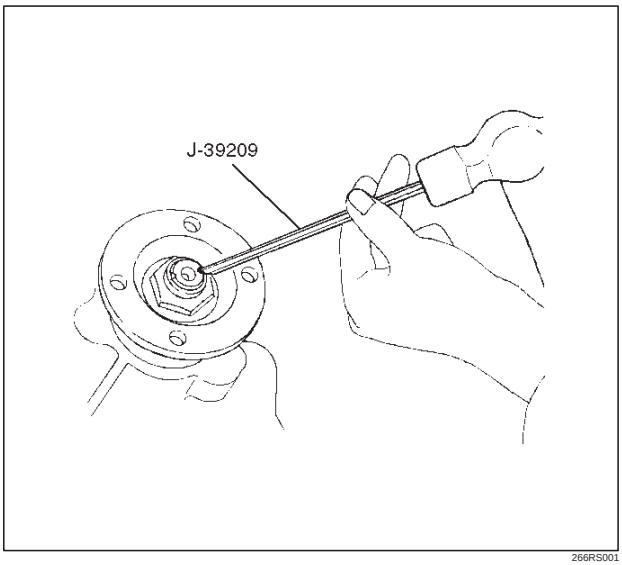

266RS001

Downloaded from www.Manualslib.com manuals search engine

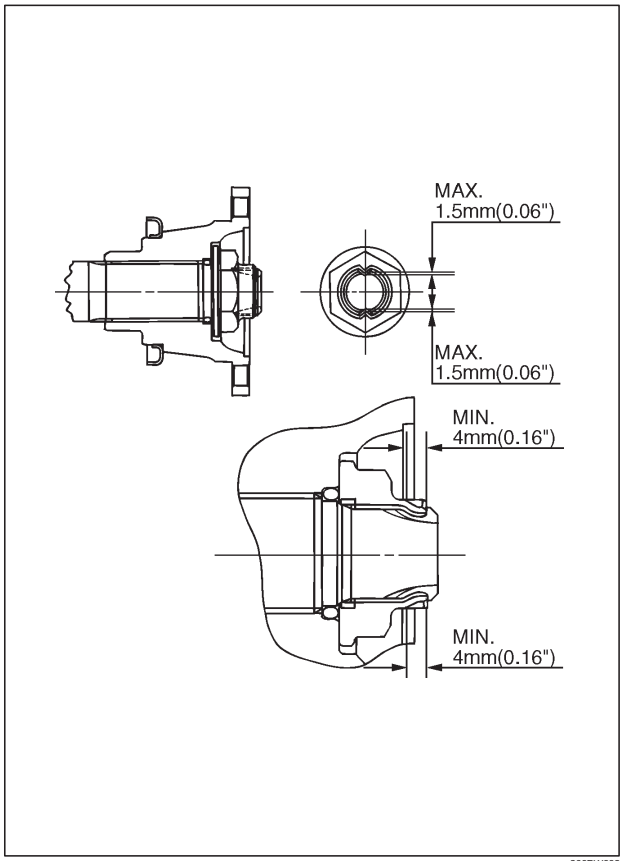

266RW002

15. Stake the front companion flange nut at one spot.

NOTE: Be sure to confirm that there is no crack at the staked portion of the flange nut after staking.

16. Install the O–ring (8) to the speedometer driven gear bushing (7).
17. Install the driven gear to the speedometer driven gear bushing (7).
18. Install the speedometer driven gear assembly to the transfer rear cover.
19. Install the plate (6) to the transfer rear case and tighten to the specified torque.

    Torque: 15 N·m (11 lb ft)

20. Install the speedometer sensor and tighten to the specified torque.

    Torque: 27 N·m (20 lb ft)

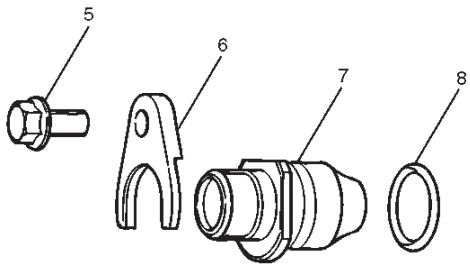

Fixing type	Drive gear No. of teeth × Driven gear No. of teeth
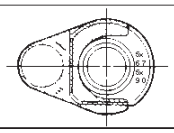	6 × 18

225RW005

Downloaded from www.Manualslib.com manuals search engine

Disassembly

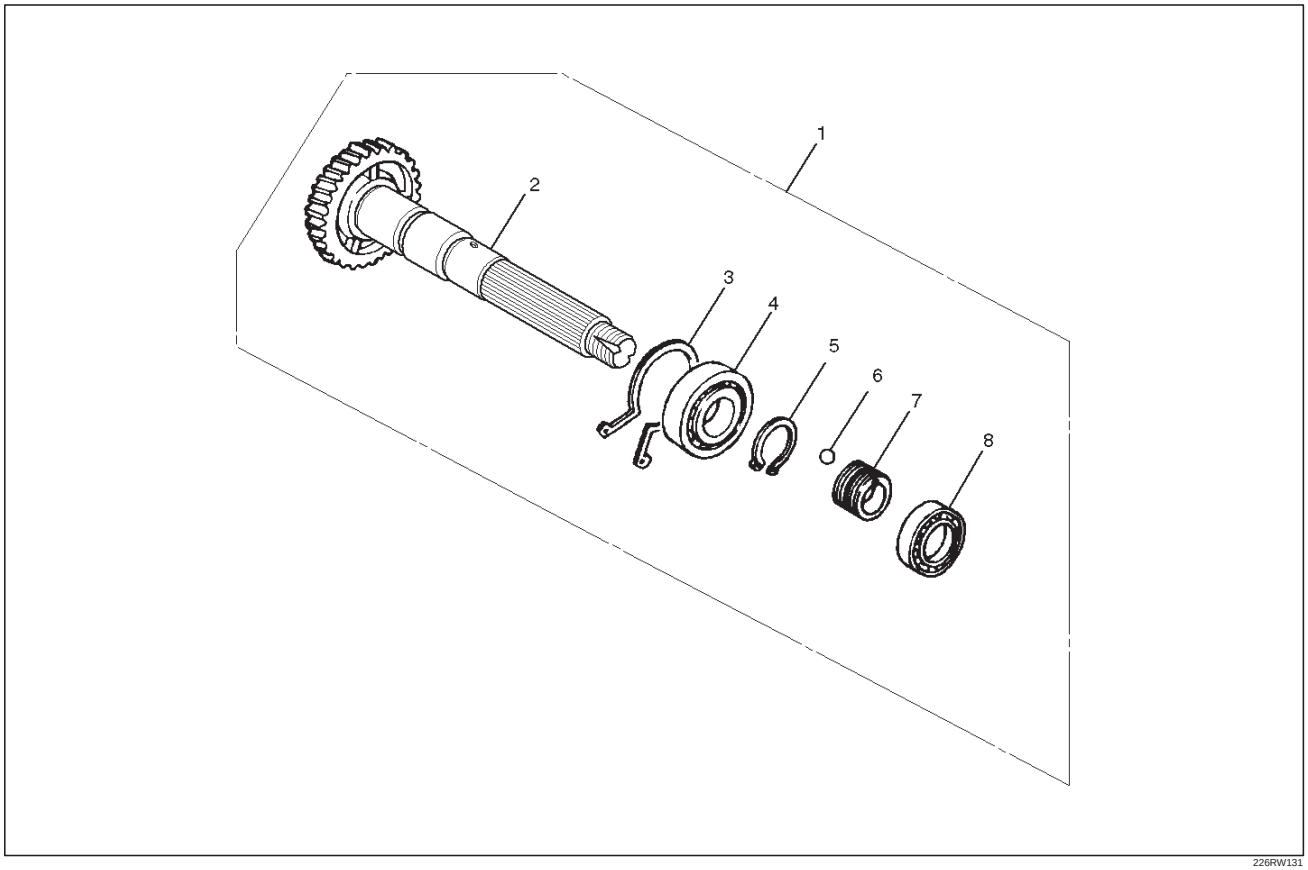

226RW131

Legend

(1) Rear Output Shaft Assembly
(2) Rear Output Shaft
(3) Bearing Snap Ring
(4) Ball Bearing
(5) Bearing Snap Ring
(6) Ball
(7) Speedometer Drive Gear
(8) Ball Bearing
(9) Transfer Rear Case (with oil seal)

1. Remove bearing snap ring, use a pair of snap ring pliers to remove the snap ring.

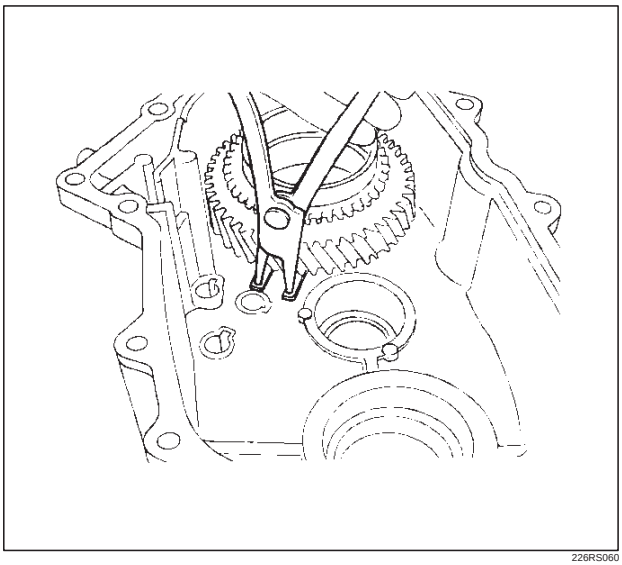

226RS060

Downloaded from www.Manualslib.com manuals search engine

2. Remove the rear output shaft assembly from the transfer rear case.
3. Remove ball bearing, use a bench press and the bearing remover J–22912–01 to remove the ball bearing.

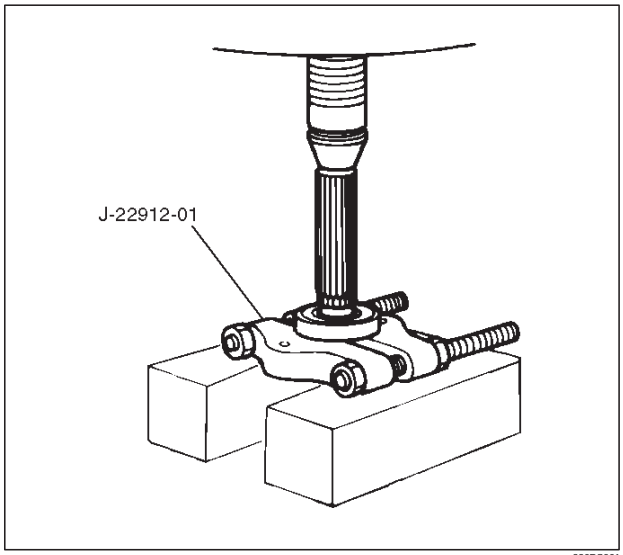

226RS061

4. Remove speedometer drive gear.
5. Remove ball.
6. Remove bearing snap ring, use a pair of snap ring pliers to remove the snap ring.
7. Remove ball bearing.
8. Remove rear output shaft, use a bench press and the bearing remover J–22912–01 to remove the ball bearing.

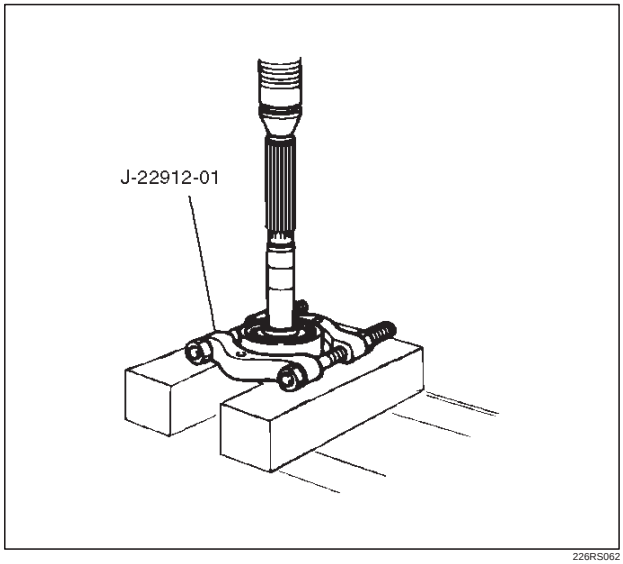

226RS062

9. Remove transfer rear case (with oil seal).

Inspection and Repair

Refer to “TRANSFER CASE ASSEMBLY” in this section for inspection and repair.

Reassembly

1. Install transfer rear case (with oil seal).
   Oil seal replacement
   - Remove the oil seal from the transfer rear case.
   - Apply engine oil to the oil seal outer surfaces.
   - Fill in recommended grease (BESCO L2) or equivalent in the oil seal lip.
   - Use the oil seal installer to install J–39208 to the rear oil seal to the transfer rear case.

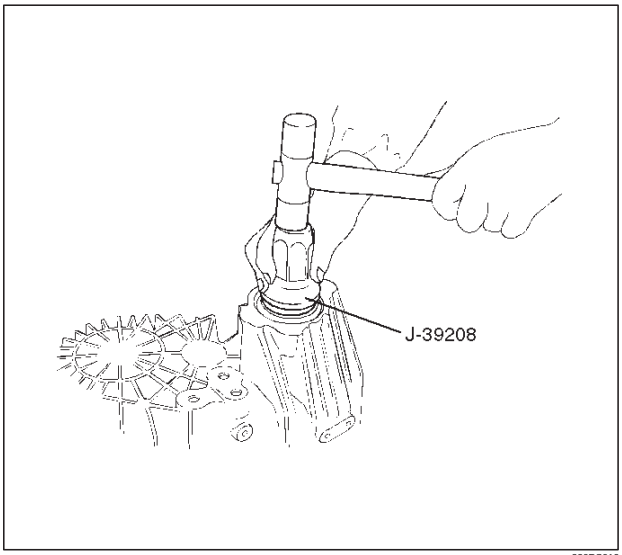

220RS019

2. Install rear output shaft.
3. Install ball bearing, use the ball bearing installer J–37223 and the adapter J–37486–A to install the ball bearing.

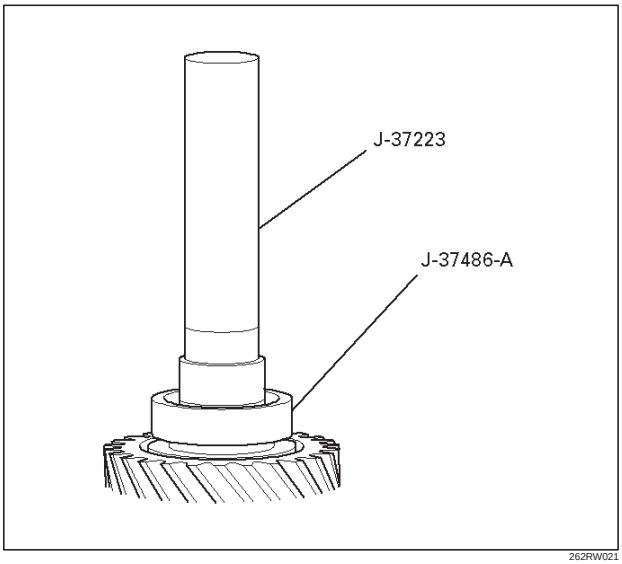

262RW021

4. Install bearing snap ring.
5. Install ball.

Downloaded from www.Manualslib.com manuals search engine

6. Install speedometer drive gear.

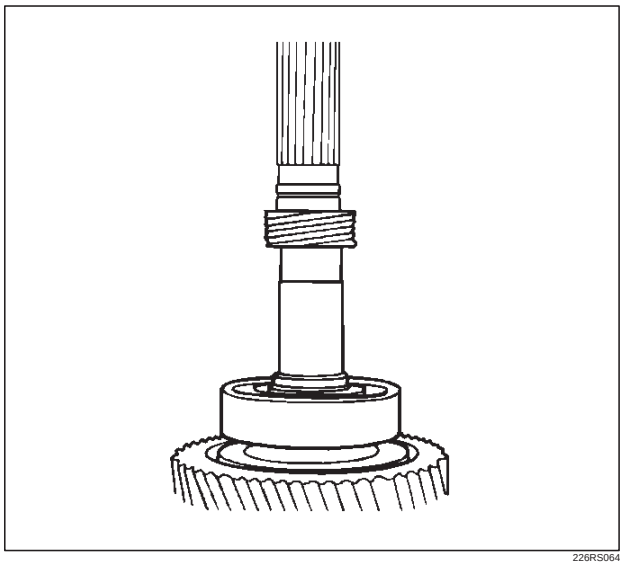

226RS064

7. Install ball bearing, use the ball bearing installer J–37223 to install the ball bearing.

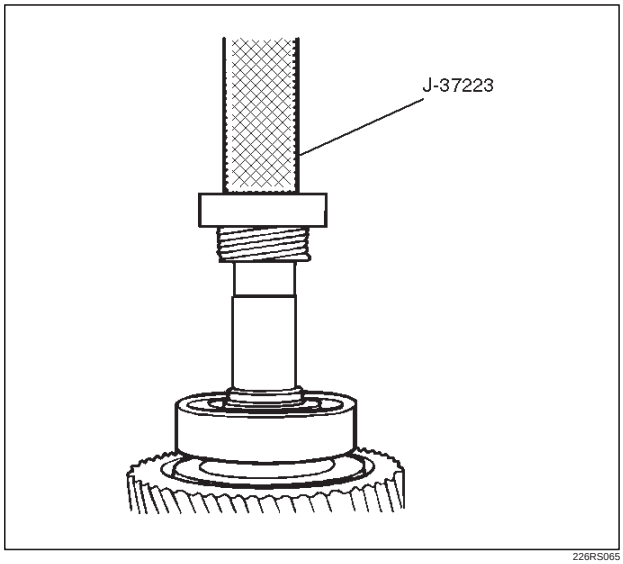

226RS065

8. Install the rear output shaft assembly to the transfer rear case.
9. Install bearing snap ring.

NOTE: The snap ring must be fully inserted into the transfer rear case snap ring groove.

Downloaded from www.Manualslib.com manuals search engine

Detent, Shift Arm, and Interlock Pin (Transfer Case Assembly)

Disassembled View

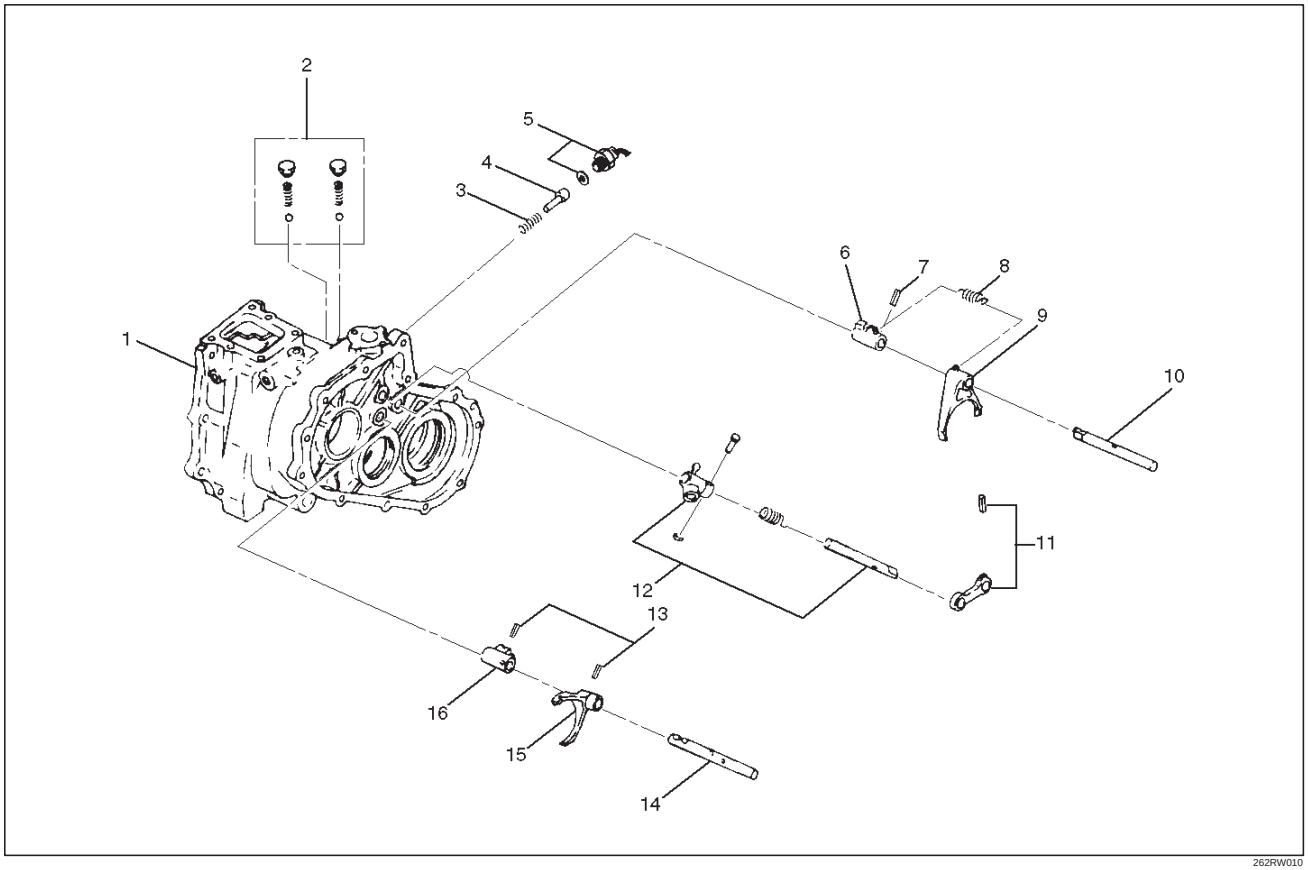

Legend

(1) Transfer Case
(2) Detent Ball, Spring and Plug
(3) Spring
(4) Interlock Pin
(5) 4WD Indicator Switch
(6) Shift Block
(7) Spring Pin
(8) Spring
(9) Shift Arm
(10) 2WD–4WD Shift Rod
(11) Spring Pin and Bridge
(12) Select Rod Assembly
(13) Spring Pin
(14) High–Low Shift Rod
(15) Shift Arm
(16) Shift Block

Disassembly

1. Remove detent ball, spring and plug.

Downloaded from www.Manualslib.com manuals search engine

2. Remove spring pin and bridge, use a spring pin remover to remove the spring pin from the bridge.

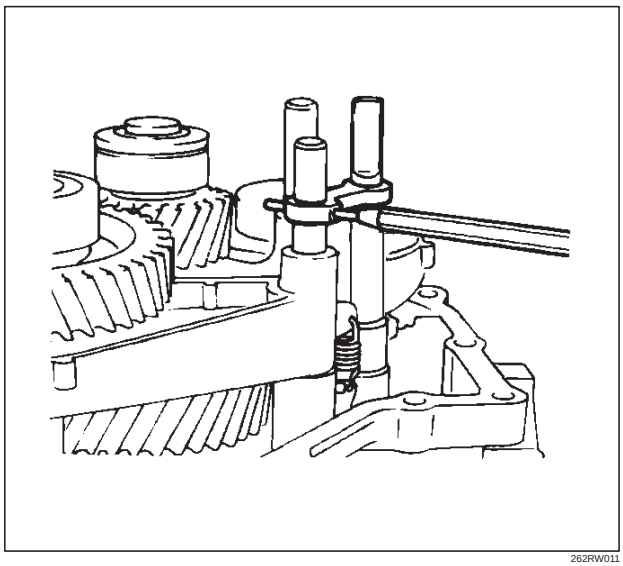

262RW011

3. Remove spring pin.
4. Remove spring.
5. Engage the 2WD–4WD sleeve with front output gear. Remove the spring pin from the block. Remove the shift rod.

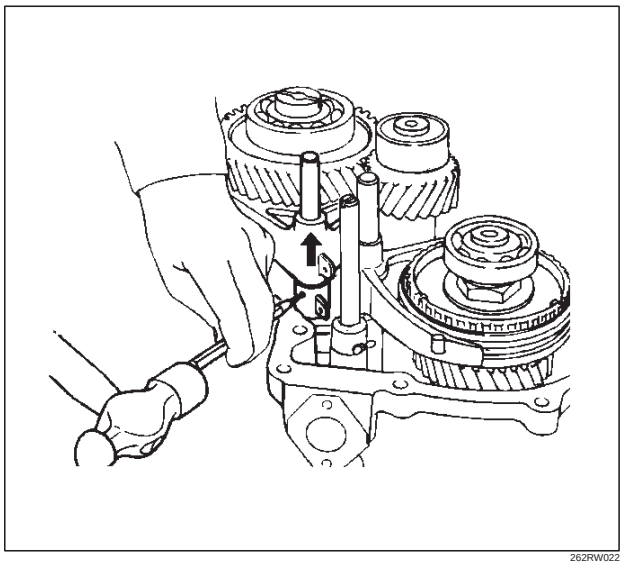

262RW022

6. Remove shift arm.
7. Remove shift block.
8. Remove 4WD indicator switch.
9. Remove interlock pin.
10. Remove spring, use a magnetic tool to remove the interlock pin from the transfer case.

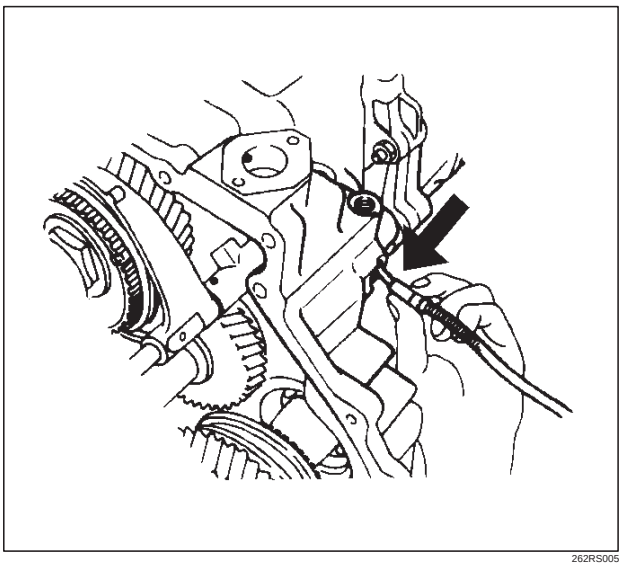

262RS005

11. Remove select rod assembly.
12. Remove spring pin.
13. Remove high–low shift rod, use a spring pin remover to remove the shift arm spring pin from the shift arm and shift block. Remove the high–low shift rod.

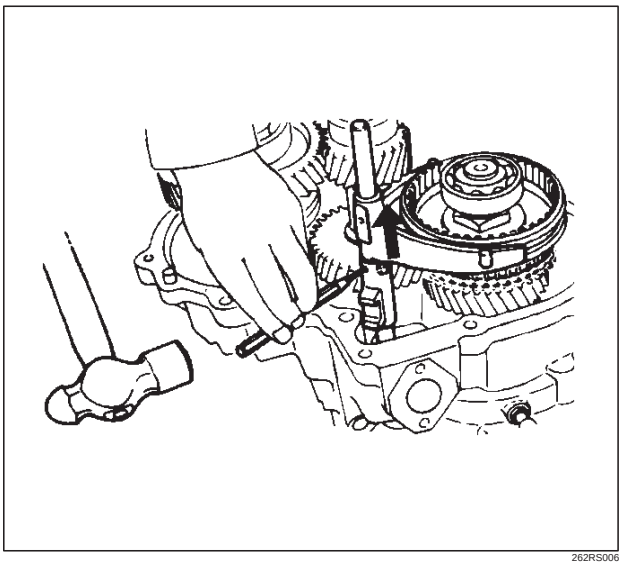

262RS006

14. Remove shift arm.
15. Remove shift block.
16. Remove transfer case.

Downloaded from www.Manualslib.com manuals search engine

Inspection and Repair

Refer to “TRANSFER CASE ASSEMBLY” in this section for inspection and repair.

Reassembly

1. Install transfer case.
2. Install shift block.
3. Install shift arm.
4. Install high–low shift rod.
5. Engage the High–Low sleeve with the 4H (1) side.
6. Install the spring pin to the shift block and shift arm.

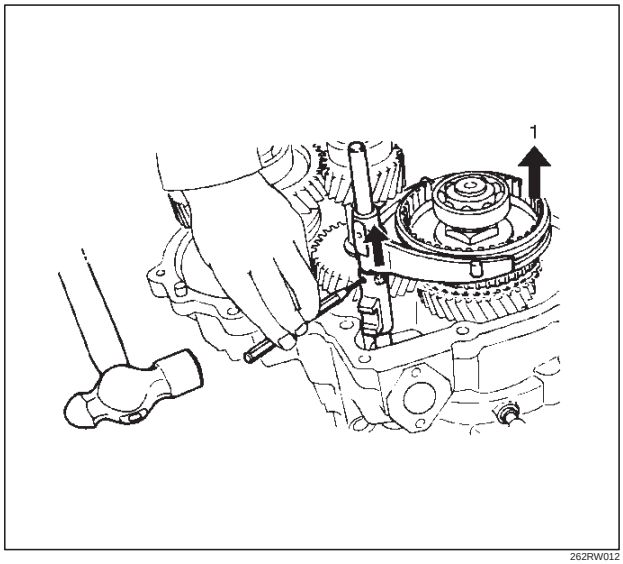

262RW012

7. Install select rod assembly.
8. Install spring.
9. Engage the High–Low sleeve with the 4H side and install the interlock pin (4) in the proper direction.
10. Install the shift rod: 2WD–4WD (2) with interlock pin pushed in.

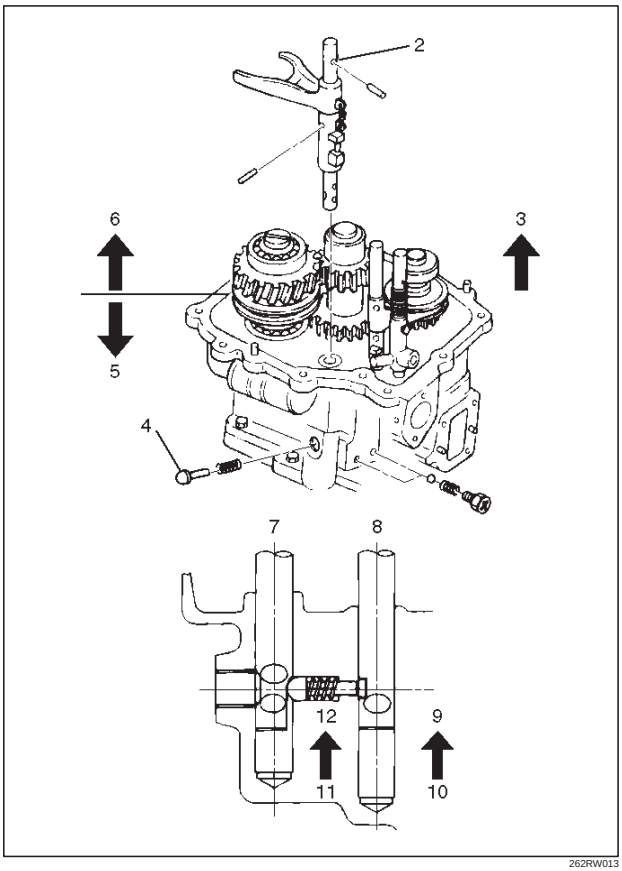

262RW013

Legend

(2) 2WD–4WD
(3) 4H Side
(4) Interlock pin
(5) 2WD
(6) 4WD
(7) Rod: 2–4
(8) Rod: H–L
(9) 4H
(10) 4L
(11) 4×2
(12) 4×4

11. Install 4WD indicator switch and tighten to the specified torque.

    Torque: 39 N·m (29 lb ft)
12. Install shift block.
13. Install shift arm.
14. Install 2WD–4WD shift rod.
15. Install spring.

Downloaded from www.Manualslib.com manuals search engine

16. Engage the 2WD–4WD sleeve with the 4WD side and install the spring pin.

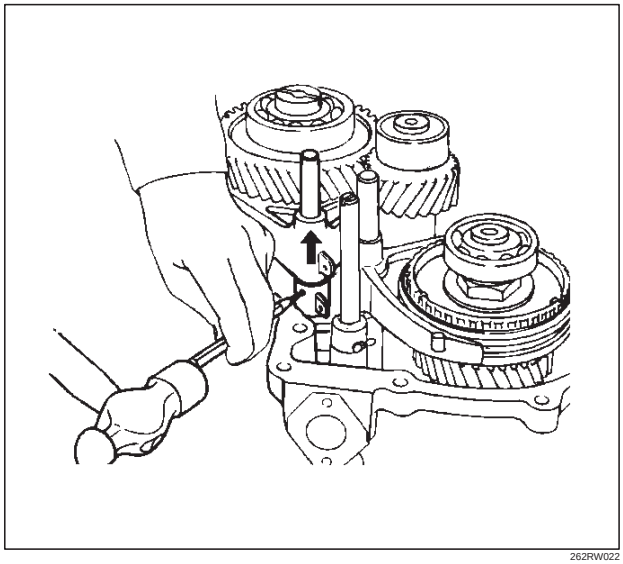

262RW022

17. Install spring pin and bridge.
18. Install detent ball, spring and plug and tighten the plug to the specified torque.

    Torque: 25 N·m (18 lb ft)

Downloaded from www.Manualslib.com manuals search engine

Transfer Case Assembly

Disassembled View

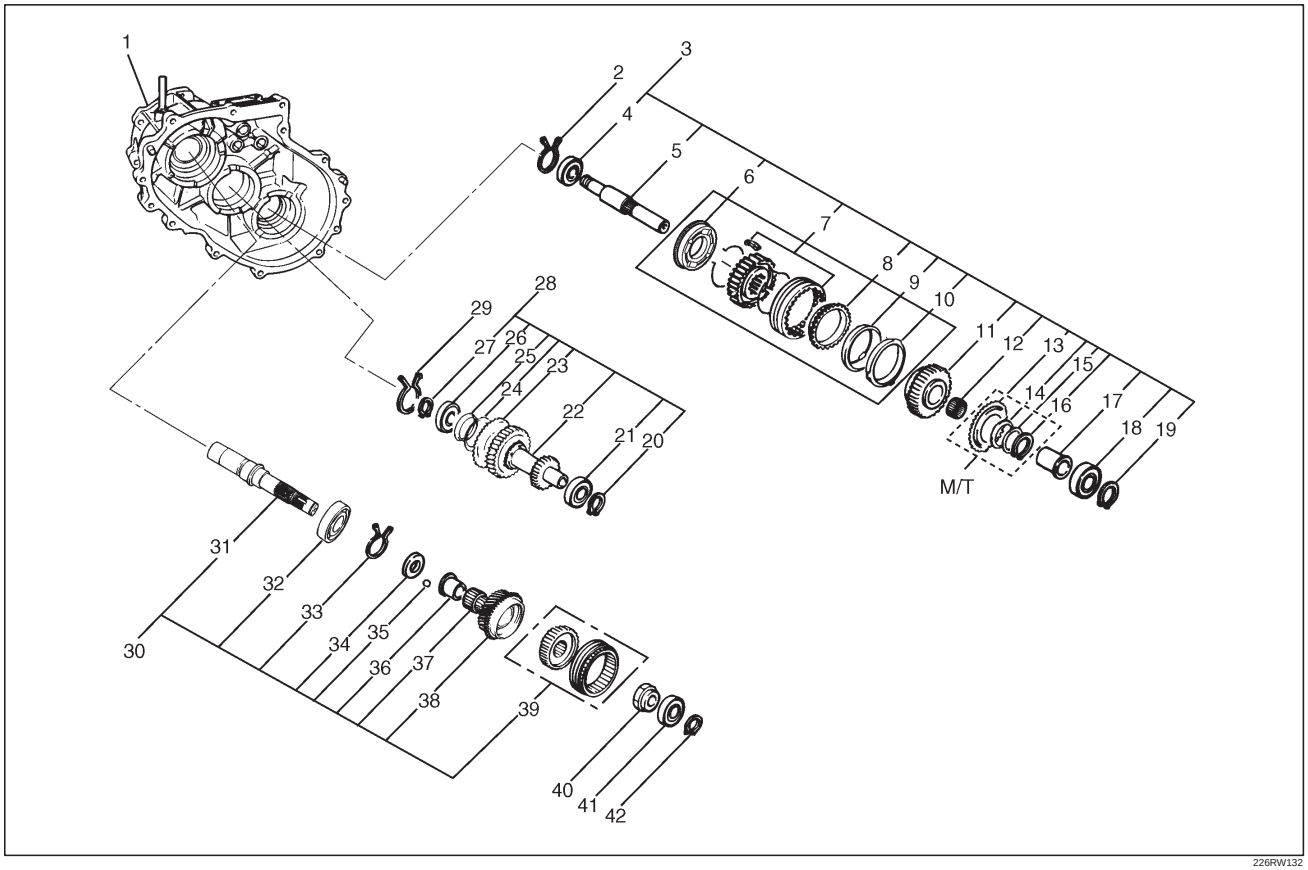

226RW132

Legend

(1) Transfer Case (with oil seal)
(2) Bearing Snap Ring
(3) Front Output Gear Assembly
(4) Ball Bearing
(5) Front Output Shaft
(6) Stopper Plate
(7) 2WD–4WD Clutch Hub and Assembly
(8) Block Ring
(9) Outside Ring
(10) Inside Ring
(11) Front Output Gear
(12) Needle Bearing
(13) Sub–Gear (anti–lash plate) (M/T)
(14) Belleville Spring (M/T)
(15) Spacer (M/T)
(16) Sub–Gear Snap Ring (M/T)
(17) Bearing Collar
(18) Ball Bearing
(19) Bearing Snap Ring
(20) Snap Ring
(21) Ball Bearing
(22) Counter Gear
(23) Sub–Gear (anti–lash plate)
(24) Belleville Spring
(25) Spacer
(26) Ball Bearing
(27) Snap Ring
(28) Counter Gear Assembly
(29) Bearing Snap Ring
(30) Input Shaft Assembly
(31) Input Shaft
(32) Ball Bearing
(33) Snap Ring
(34) Plate
(35) Ball
(36) Bearing Collar
(37) Needle Bearing
(38) Transfer Input Gear
(39) High–Low Clutch Hub and Sleeve Assembly
(40) Lock Nut
(41) Ball Bearing
(42) Bearing Snap Ring

Downloaded from www.Manualslib.com manuals search engine

Disassembly

1. Remove bearing snap ring, use a pair of snap ring pliers to remove the snap ring.
2. Remove ball bearing, use a bearing remover J–37217 and puller J–37487 to remove the ball bearing.

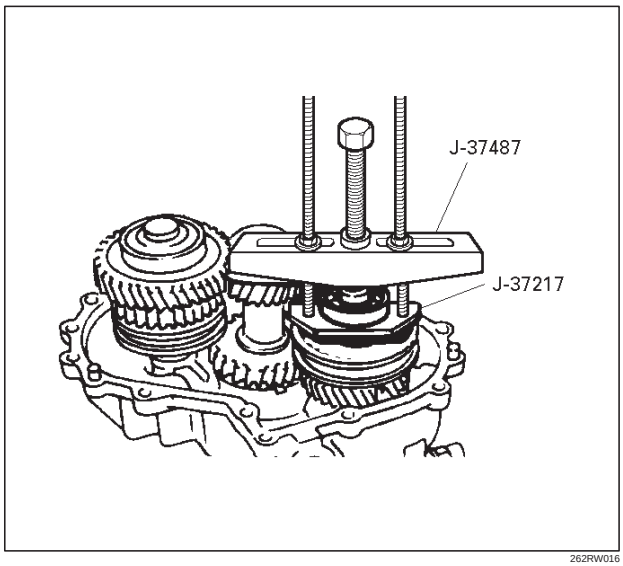

262RW016

3. Install the front companion flange temporarily.
4. Use the Companion flange holder J–8614–11 and lock nut wrench J–37219 to remove the lock nut.

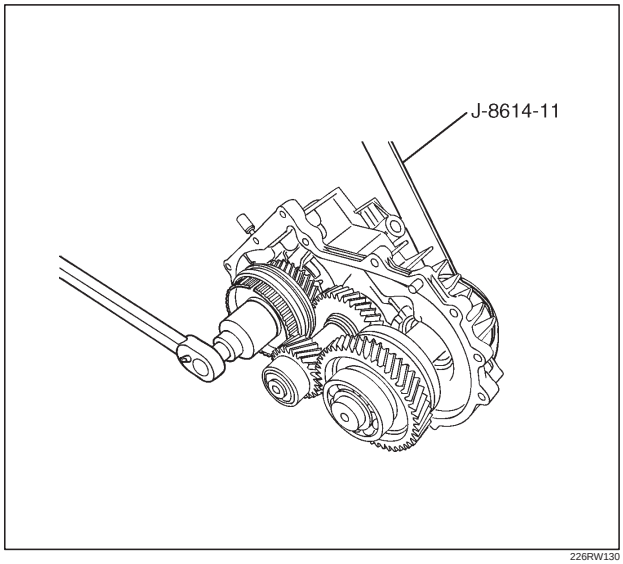

226RW130

5. Remove the front companion flange.
6. Remove snap ring.
7. Remove the input shaft assembly from the transfer case.

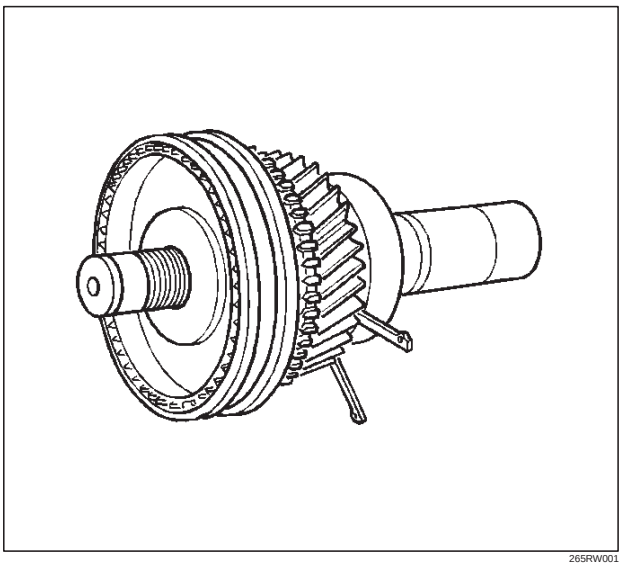

265RW001

8. Remove high–low clutch hub and sleeve.
9. Remove transfer input gear, use the universal puller to remove the high–low clutch hub and sleeve, and transfer input gear.

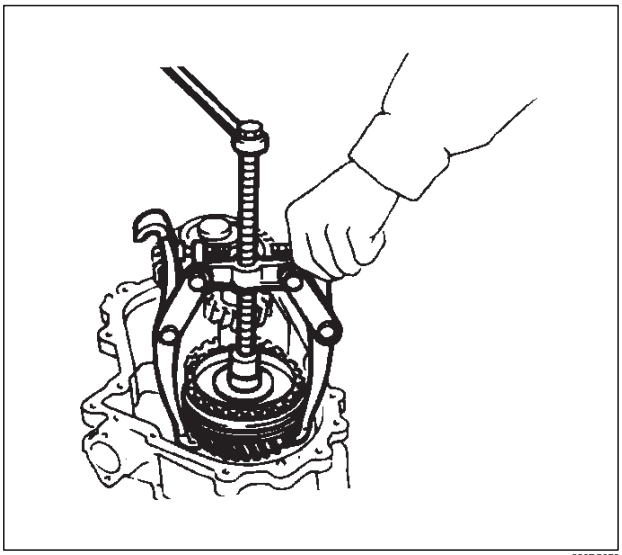

226RS070

10. Remove needle bearing.

Downloaded from www.Manualslib.com manuals search engine

11. Remove bearing collar.

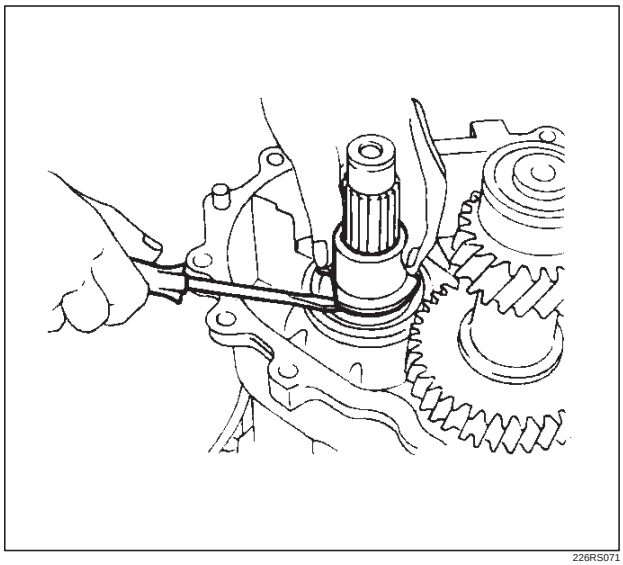

226RS071

12. Remove ball.
13. Remove plate.
14. Remove ball bearing, use a bench press and the ball bearing remover J–22912–01 to remove the ball bearing.

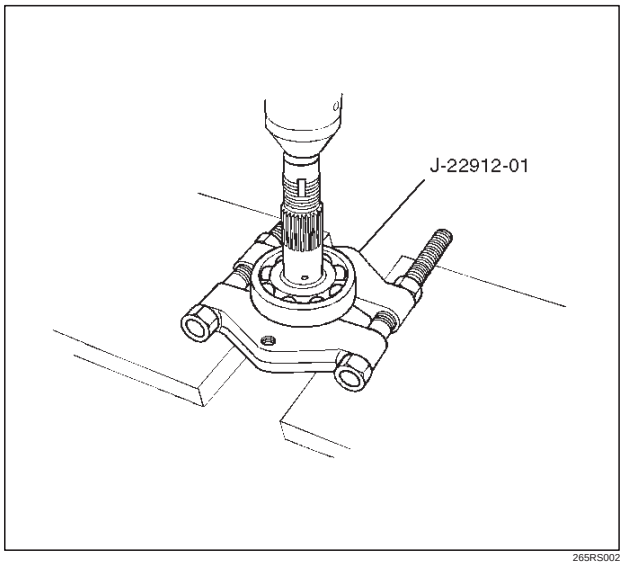

265RS002

15. Remove input shaft.
16. Remove bearing snap ring.
17. Remove front output gear assembly, use a pair of snap ring pliers to expand the bearing snap ring and use a plastic hammer to tap the front output gear assembly free.

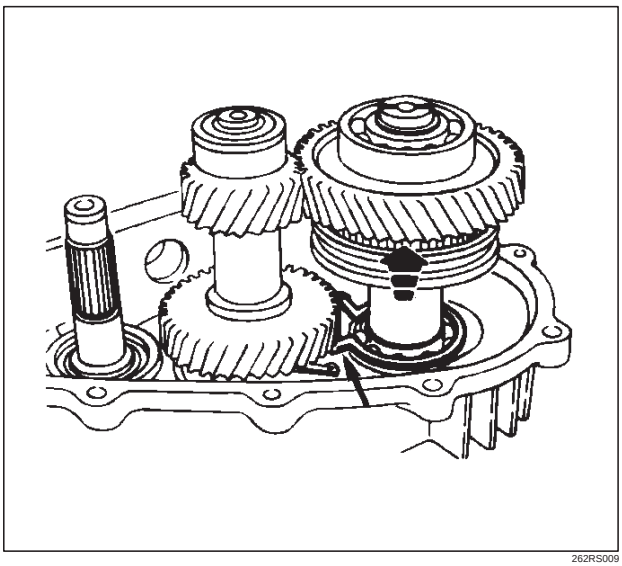

262RS009

18. Remove bearing snap ring.
19. Remove ball bearing.
20. Remove bearing collar.
21. Remove sub–gear snap ring. (M/T)
22. Remove spacer. (M/T)
23. Remove belleville spring. (M/T)
24. Remove sub–gear (anti–lash plate). (M/T)
25. Remove front output gear.
26. Remove needle bearing, use a bench press and the bearing remover J–22912–01 to remove the parts above.

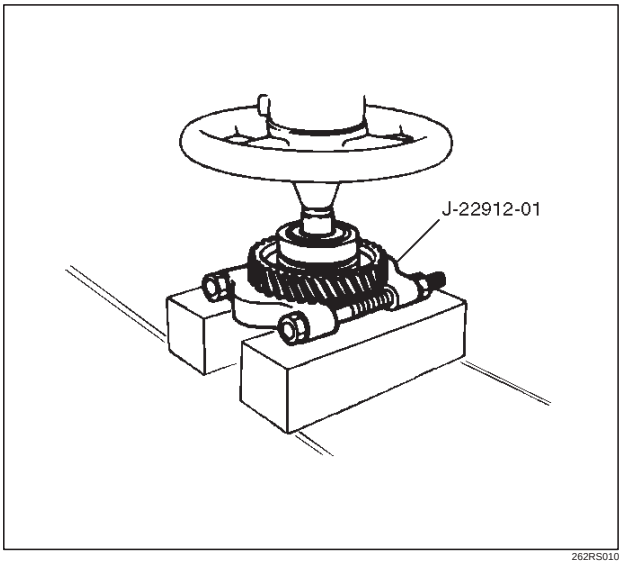

262RS010

27. Remove inside ring.
28. Remove outside ring.
29. Remove block ring.

Downloaded from www.Manualslib.com manuals search engine

30. Disassemble the 2WD–4WD clutch hub and sleeve assembly.
    - Springs (1)
    - Inserts (2)
    - Clutch Hub (3)
    - Sleeve (4)

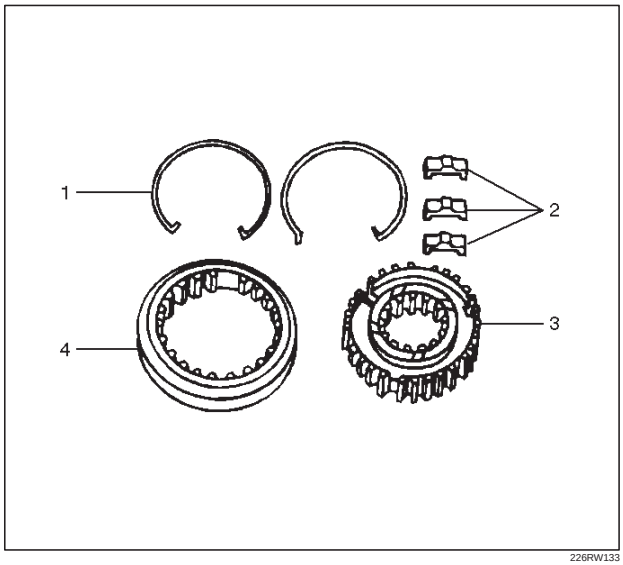

226RW133

31. Remove stopper plate.

NOTE: Do not reuse the stopper plate.

32. Remove ball bearing, use the ball bearing remover J–22912–01 to remove the ball bearing.

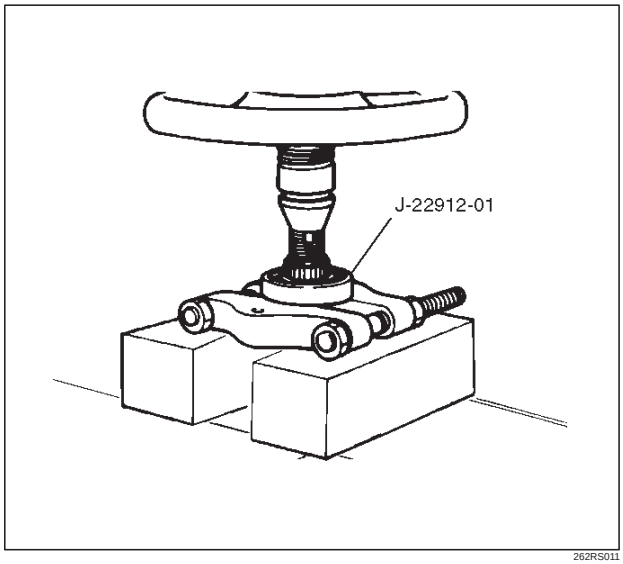

262RS011

33. Remove front output shaft.
34. Remove bearing snap ring.
35. Remove the counter gear assembly from the transfer case.
36. Remove snap ring, use a pair of snap ring pliers to remove the snap ring.
37. Remove ball bearing, use a bench press and the bearing remover J–22912–01 to remove the ball bearing.
38. Remove snap ring, use a pair of snap ring pliers to remove the snap ring.
39. Remove ball bearing, use a bench press and the bearing remover J–22912–01 to remove the ball bearing.

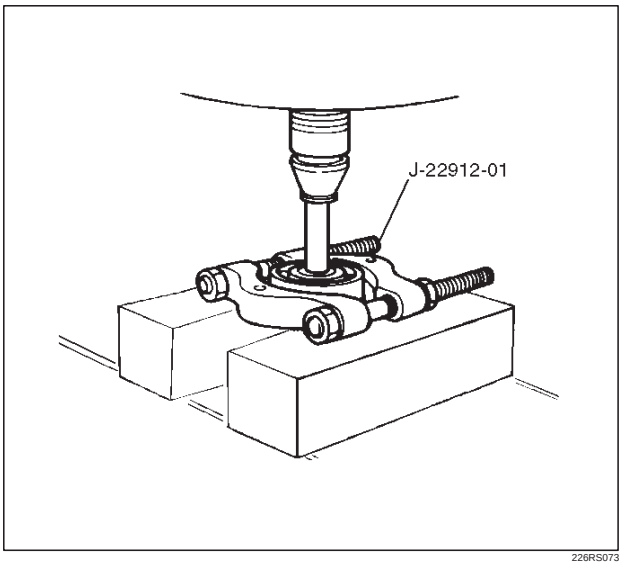

226RS073

40. Remove spacer.
41. Remove belleville spring.
42. Remove sub–gear (anti–lash plate).
43. Remove counter gear.

Inspection and Repair

1. Make the necessary repair or parts replacement if wear, damage or any other abnormal conditions are found during inspection.
2. Wash all parts thoroughly in clean solvent. Be sure all old lubricant, metallic particles, dirt, or foreign material are removed from the surfaces of every part. Apply compressed air to each oil feed port and channel in each case half to remove any obstructions or cleaning solvent residue.

Gears

1. Inspect all the gear teeth for signs of excessive wear or damage and check all the gear splines for burrs, nicks, wear or damage. Remove the minor nicks or scratches on an oil stone. Replace any part exhibiting excessive wear or damage.

Gear Inside Diameter

1. Use an inside dial indicator to measure the gear inside diameter.

Downloaded from www.Manualslib.com manuals search engine

2. If the measured value exceeds the specified limit, the gear must be replaced.

Gear inside diameter

Standard : 48.000–48.013 mm (1.8898–1.8903 in)

Limit : 48.10 mm (1.894 in)

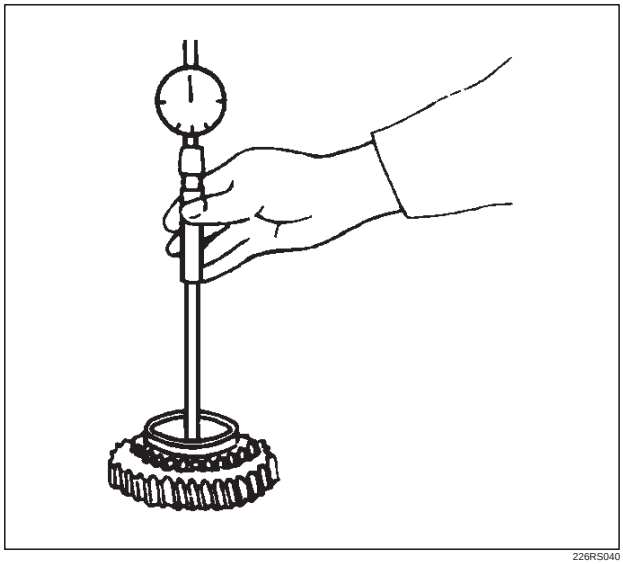

226RS040

Clutch Hub Spline Play

1. Set a dial indicator to the clutch hub to measured.
2. Move the clutch hub as far as possible to both the right and the left.
   Note the dial indicator reading.
3. If the measured value exceeds the specified limit, the clutch hub must be replaced.

Clutch hub spline play

Standard : 0–0.1 mm (0–0.004 in)

Limit : 0.2 mm (0.008 in)

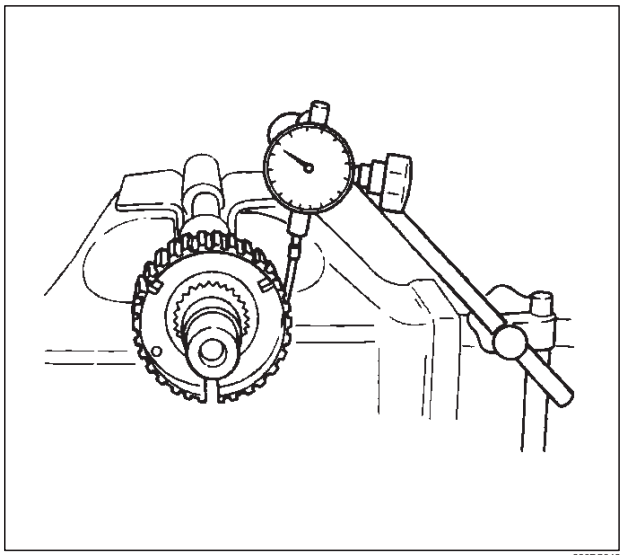

226RS042

Bearings

1. Inspect the condition of all the needles and ball bearings. Wash bearings thoroughly in a cleaning solvent. Apply compressed air to the bearings.

NOTE: Do not allow the bearings to spin. Turn them slowly by hand. Spinning bearings may damage the rollers.

2. Lubricate the bearings with a light oil and check them for roughness by slowly turning the race by hand.

Ball Bearing Play

1. Use a dial indicator to measure the ball bearing play.
2. If the measured value exceeds the specified limit, the ball bearing must be replaced.

Limit : 0.2 mm (0.008 in)

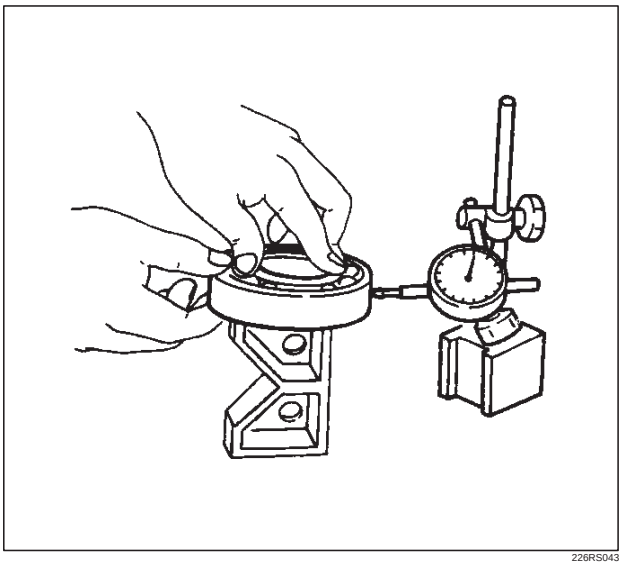

226RS043

Downloaded from www.Manualslib.com manuals search engine

Block Ring and Insert Clearance

1. Use a vernier caliper to measure the clearance between the block ring and the insert.
2. If the measured value exceeds the specified limit, the block ring and the insert must be replaced.

Block ring and insert clearance

Standard : 3.46–3.74 mm (0.136–0.147 in)

Limit : 4.0 mm (0.158 in)

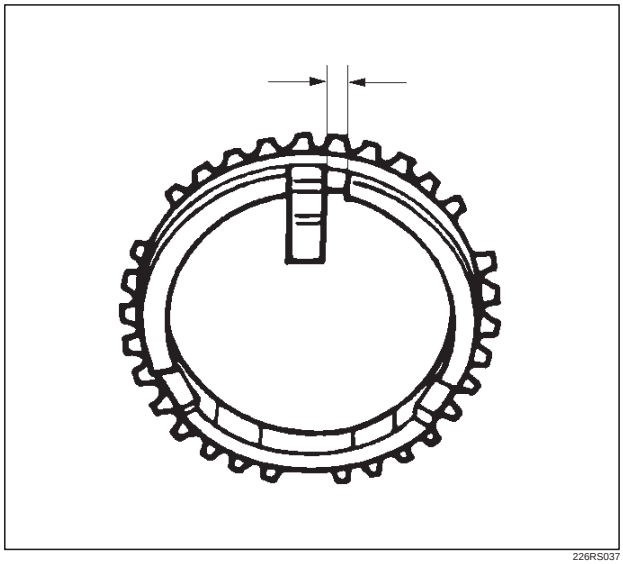

226RS037

2WD–4WD Synchronizer (3–Cone)

1. Use a thickness gauge to measure the clearance between the block ring and the dog teeth.
2. If the measured value exceeds the specified limit, the 2WD–4WD synchronizer assembly must be replaced.

Block ring and insert clearance

Standard : 1.5 mm (0.059 in)

Limit : 0.8 in (0.031 in)

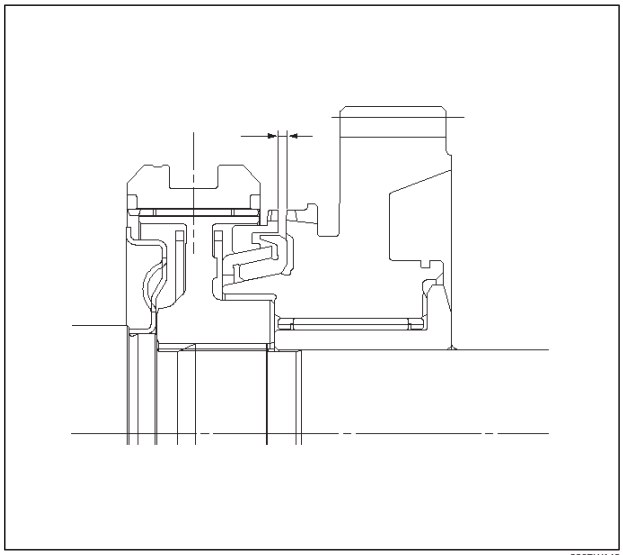

226RW142

Clutch Hub and Insert Clearance

1. Use a thickness gauge to measure the clearance between the clutch hub and the insert.
2. If the measured value exceeds the specified limit, the clutch hub and the insert must be replaced.

Clutch hub and insert clearance

Standard : 0.01–0.19 mm (0.0004–0.0075 in)

Limit : 0.3 mm (0.012 in)

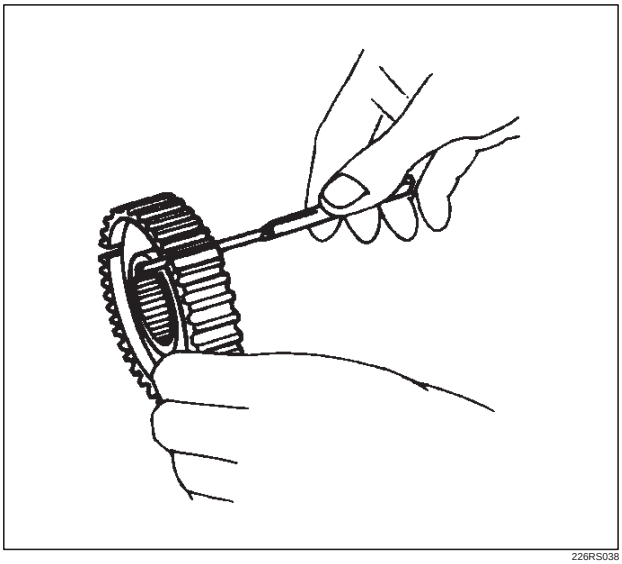

226RS038

Detent Springs

1. Inspect the springs for distortion, cracks or wear. Replace if these conditions are present.

Detent Spring Free Length

1. Use a vernier caliper to measure the detent spring free length.

Downloaded from www.Manualslib.com manuals search engine

2. If the measured value is less than the specified limit, the detent spring must be replaced.

Detent spring free length

Detent ball

Standard : 23.4 mm (0.921 in)

Limit : 22.8 mm (0.898 in)

Interlock pin

Standard : 1.59 mm (0.063 in)

Limit : 1.53 mm (0.060 in)

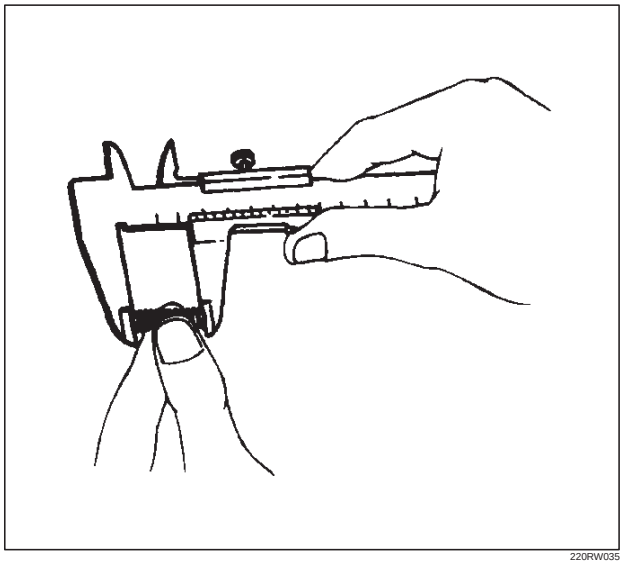

220RW035

Detent Spring Tension

1. Use a spring tester to measure the detent spring tension.
2. If the measured value is less than the specified limit, the detent spring must be replaced.

Detent spring free length

Detent ball

Compressed height : 18.7 mm (0.736 in)

Standard : 68.6–88.2 N (15.4–19.8 lb)

Interlock pin

Compressed height : 11.5 mm (0.453 in)

Standard : 9.8 N (2.2 lb)

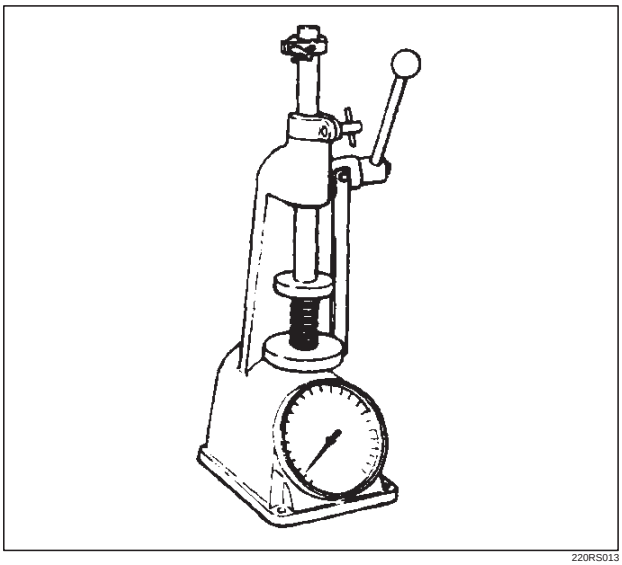

220RS013

Shift Arm

1. Inspect the shift arms for wear, distortion or scoring. Replace if these conditions are present.

Shift Arm Thickness

1. Use a micrometer to measure the shift arm thickness.
2. If the measured value is less than the specified limit, the shift arm must be replaced.

Shift arm thickness

Standard : 9.60–9.85 mm (0.378–0.388 in)

Limit : 9.0 mm (0.354 in)

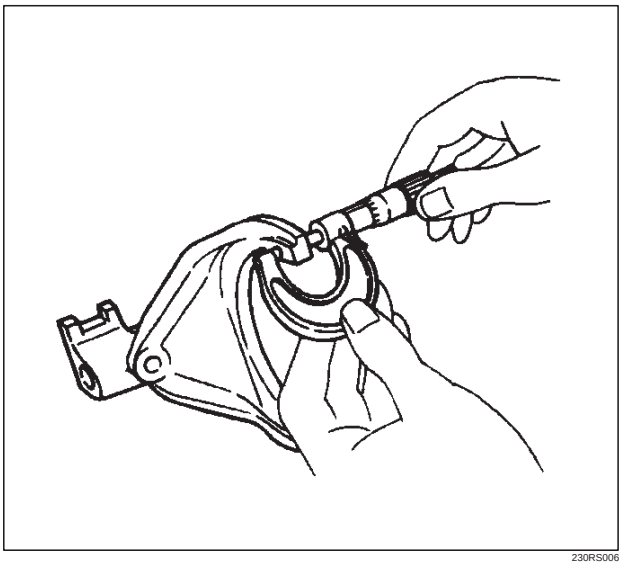

230RS006

Downloaded from www.Manualslib.com manuals search engine

Reassembly

1. Install transfer case (with oil seal).

Input shaft oil seal (1) replacement

1. Remove the oil seal from the transfer case.
2. Apply engine oil to the oil seal outer surfaces.
3. Apply recommended grease (BESCO L2) or equivalent to the oil seal lip.
4. Use the oil seal installer J–38592 to install the oil seal to the transfer case.

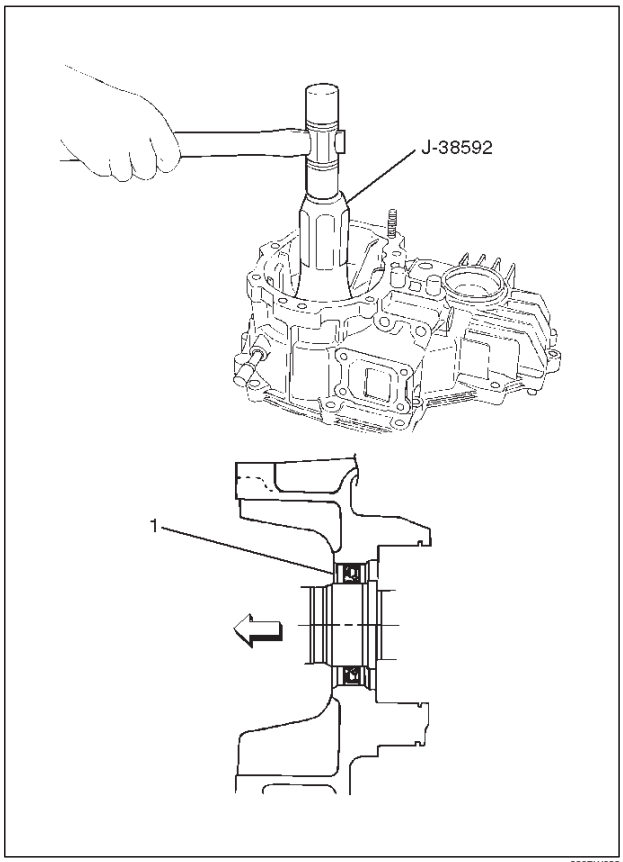

220RW032

Front output shaft oil seal (2) replacement

1. Remove the oil seal from the transfer case.
2. Apply engine oil to the oil seal outer surfaces.
3. Apply recommended grease (BESCO L2) or equivalent to the oil seal lip.
4. Use the oil seal installer J–38594 to install the oil seal to the transfer case.

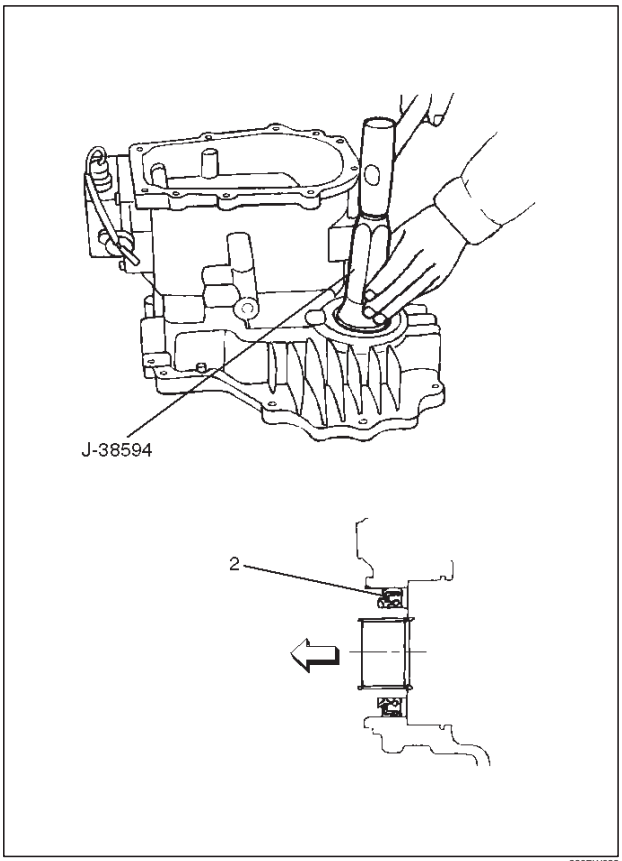

220RW033

2. Install counter gear.
3. Install sub–gear and apply chassis grease (3) to the sub–gear and the counter gear thrust surfaces.

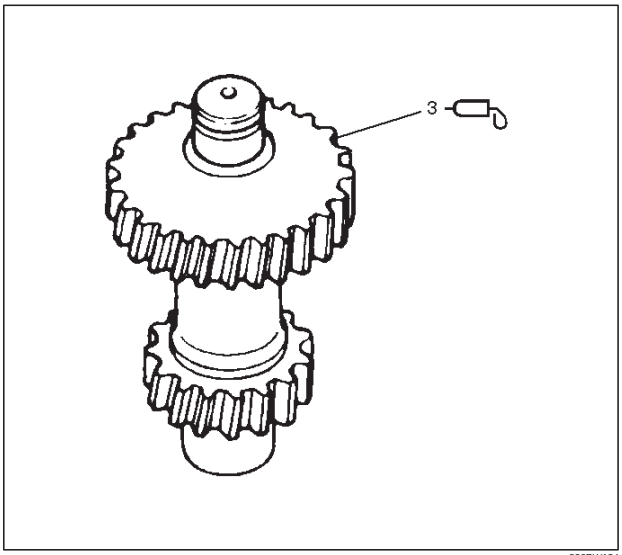

226RW134

4. Install belleville spring.
5. Install spacer.
6. Install ball bearing.
7. Select a snap ring that will allow the minimum axial play.

Clearance : 0–0.1 mm (0–0.004 in)

Downloaded from www.Manualslib.com manuals search engine

Snap ring availability:	
Thickness	Color–coding
1.50 mm (0.059 in)	White
1.55 mm (0.061 in)	Yellow
1.60 mm (0.063 in)	Blue

8. Use a pair of snap ring pliers to install the snap ring to the counter gear.

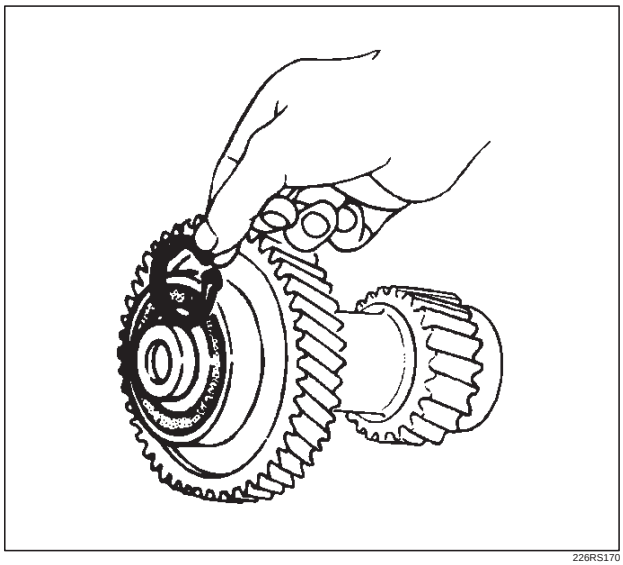

226RS170

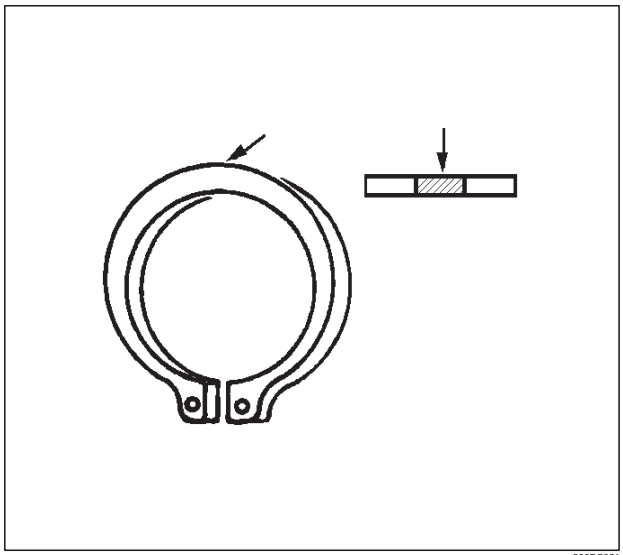

226RS021

Sub–Gear (anti–lash plate) Preload

1. Hook a length of piano wire (4) over one of the sub–gear (5) teeth.
2. Attach the other end of the piano wire (4) to a spring balancer.
3. Measure the sub–gear preload.

Preload : 59–98 N (13–22 lb)

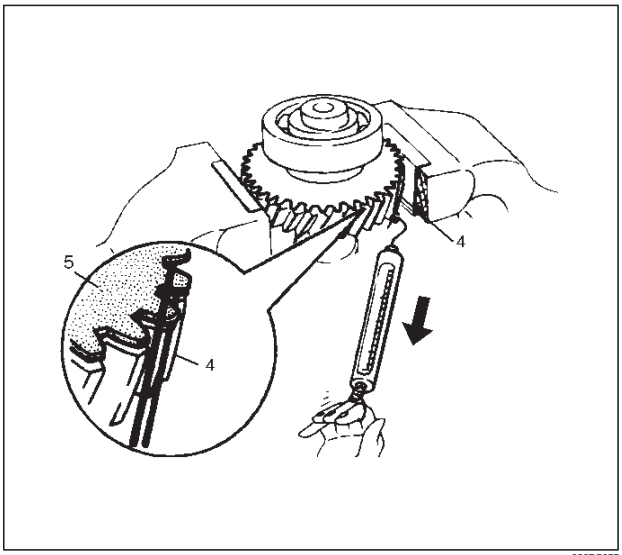

226RS075

9. Install ball bearing.
10. Install snap ring.
11. Install the counter gear assembly to the transfer case.
12. Install bearing snap ring, use a pair of snap ring pliers to install the snap ring to the transfer case.

NOTE: The snap ring must be fully inserted into the transfer case snap ring groove.

13. Install front output shaft.
14. Install ball bearing, use a bench press to install the ball bearing to the front output shaft.

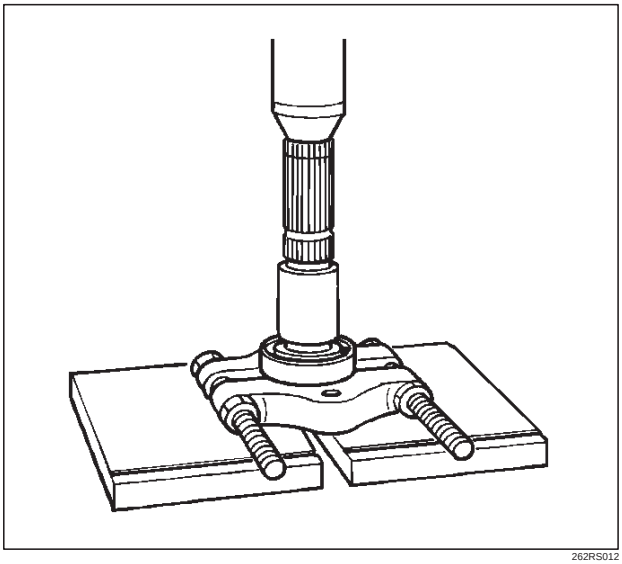

262RS012

15. Install stopper plate.

Downloaded from www.Manualslib.com manuals search engine

16. Assemble the clutch sleeve and hub assembly.

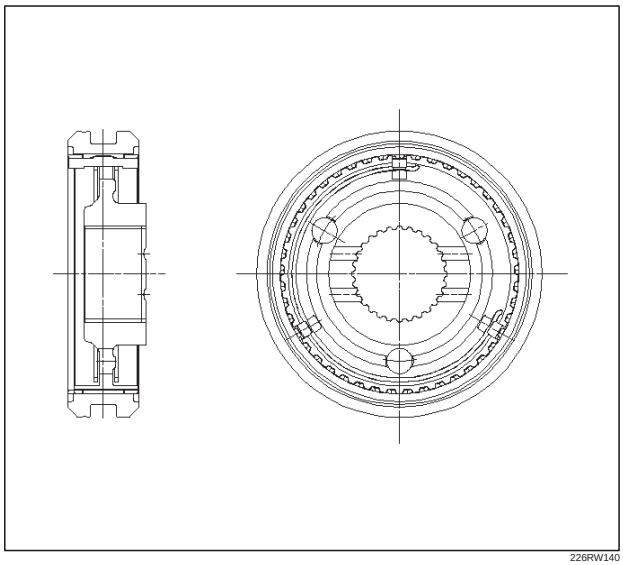

226RW140

17. Engage the springs in the same insert with the open ends away from each other.

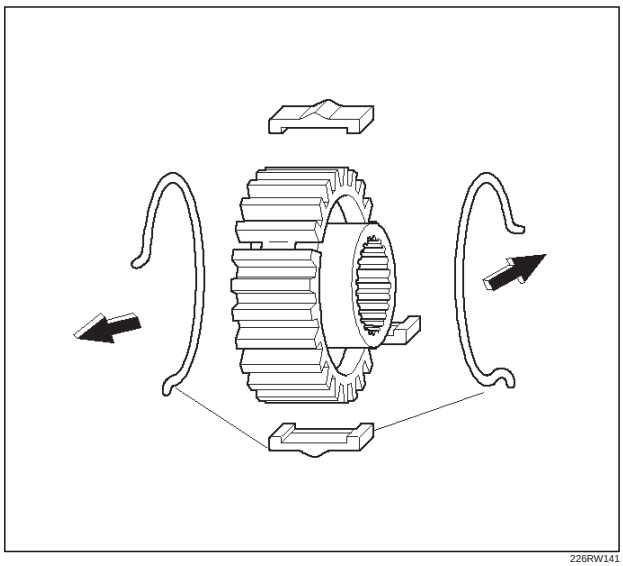

226RW141

18. Install a new stopper plate and the clutch sleeve and hub assembly to the front output shaft.

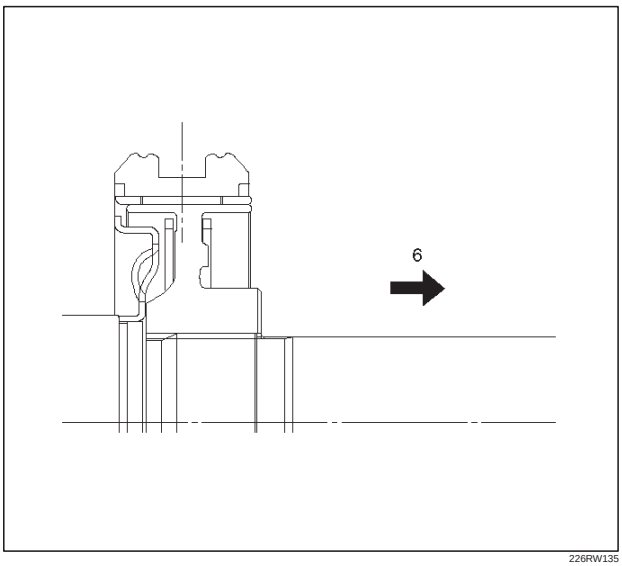

226RW135

Legend

(6) Front Output Gear

19. The clutch hub face (with the heavy boss) must be facing the front output gear side.
20. Use a bench press to slowly force the clutch sleeve and hub assembly together with the stopper plate into place.
21. Align the inserts with the block ring insert grooves. Install the block ring to the clutch sleeve and hub assembly.
22. Install outside ring.
23. Install the outside ring, inside ring and needle bearing to the front output gear and bearing collar.

NOTE: Coat all parts with transmission oil before installing them.

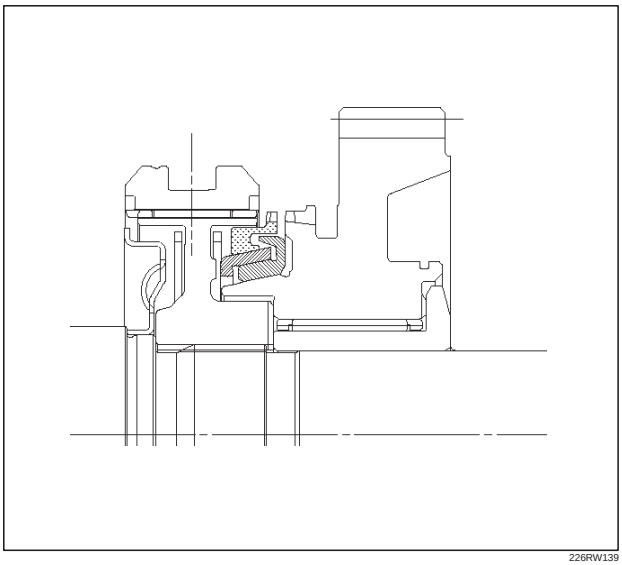

226RW139

24. Install needle bearing.
25. Install front output gear.
26. Install sub–gear (anti–lash plate). (M/T)

Downloaded from www.Manualslib.com manuals search engine

27. Install belleville spring. (M/T)
28. Install spacer and apply engine oil to the thrust surfaces of the sub–gear, the belleville spring, and the spacer. (M/T)

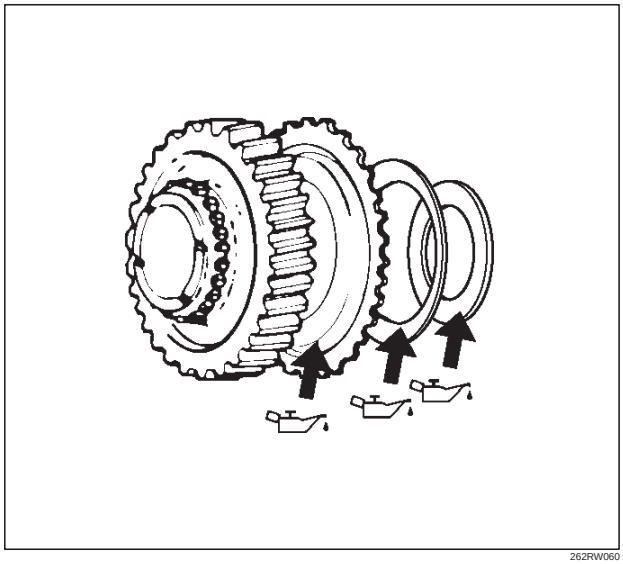

262RW060

29. Install sub–gear snap ring. (M/T)
30. Install bearing collar, use a bench press to install the needle bearing collar together with the front output gear.

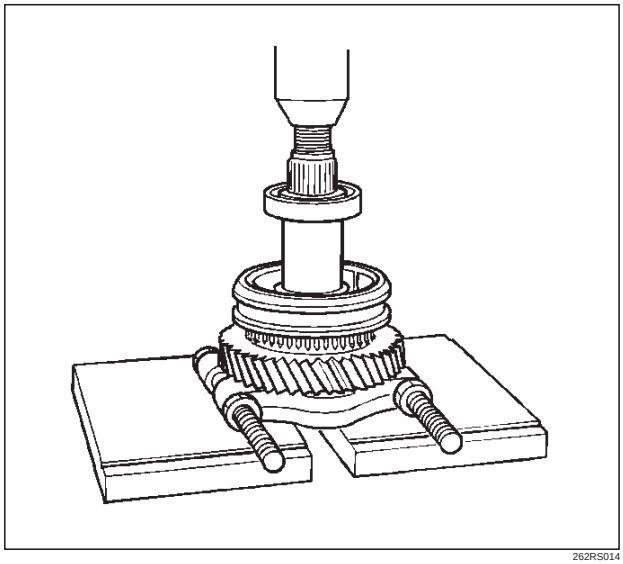

262RS014

31. Install ball bearing.
32. Install bearing snap ring and select a snap ring that will allow the minimum axial play.

Clearance : 0–0.1 mm (0–0.004 in)

Snap ring availability:	
Snap ring thickness	Color coding
1.55 mm (0.061 in)	White
1.60 mm (0.063 in)	Yellow
1.65 mm (0.065 in)	Blue
1.70 mm (0.067 in)	Pink
1.75 mm (0.069 in)	Green
1.80 mm (0.071 in)	Brown
1.85 mm (0.073 in)	Red
1.90 mm (0.075 in)	Orange

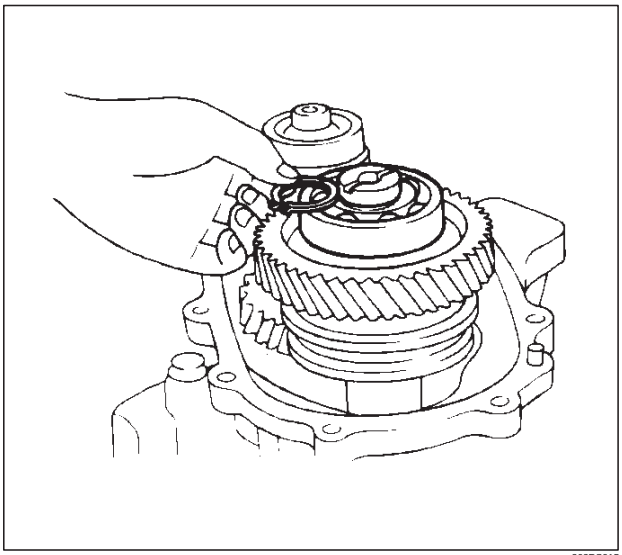

262RS015

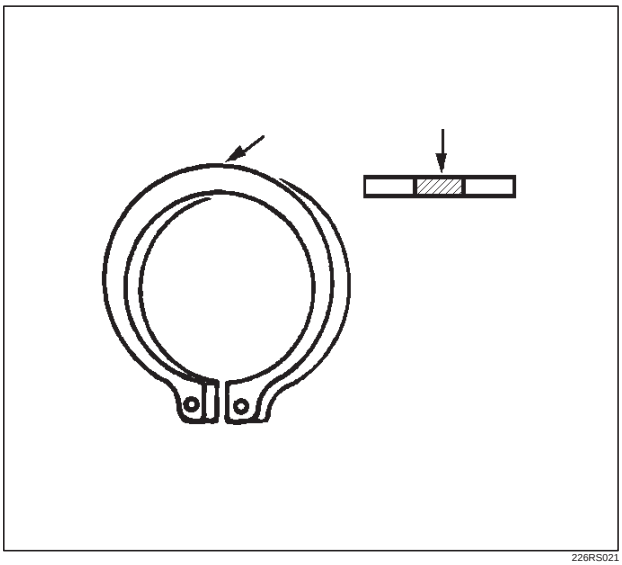

226RS021

Downloaded from www.Manualslib.com manuals search engine

33. Use a pair of snap ring pliers to install the snap ring to the output shaft.

Sub gear (anti lash plate) preload (M/T)

1. Hook a length of piano wire (4) over one of the sub–gear (5) teeth.
2. Attach the other end of the piano wire to (4) a spring balancer.
3. Measure the sub–gear preload.

Preload: 59–98 N (13–22 lb)

(M/T)

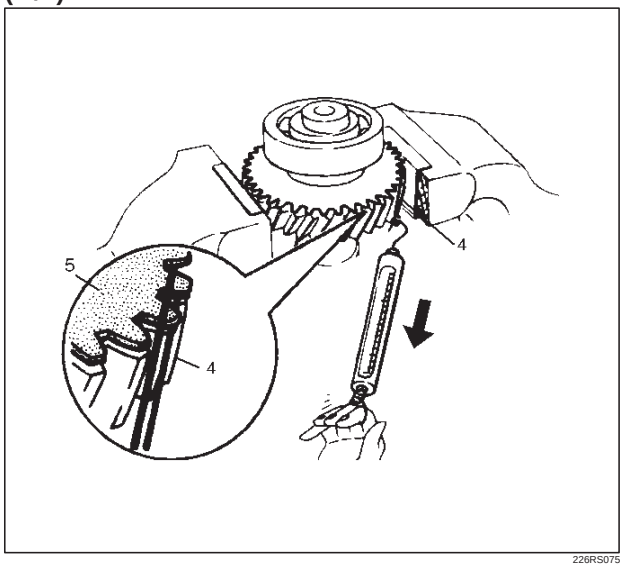

226RS075

34. Install front output gear assembly.
35. Install bearing snap ring, use a pair of snap ring pliers to install the snap ring to the transfer case.

NOTE: The snap ring must be fully inserted into the transfer case snap ring groove.

36. Input shaft.
37. Install ball bearing, use a bench press to install the ball bearing to the input shaft.

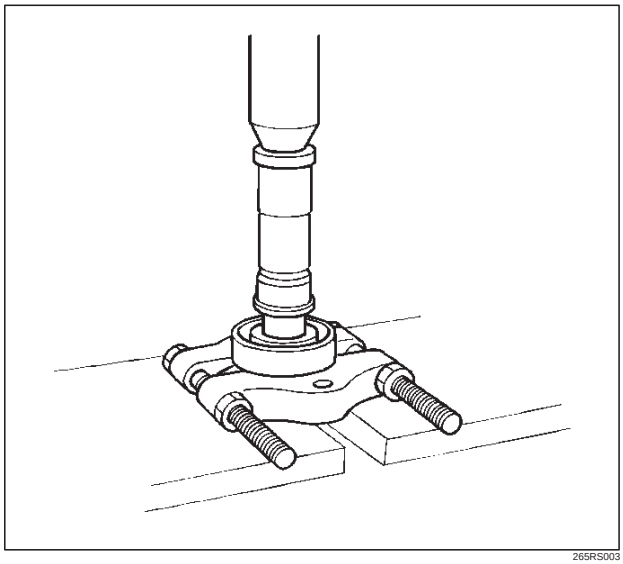

265RS003

38. Install plate.
39. Install ball.
40. Install bearing collar.
41. Install needle bearing.
42. Install transfer input gear.
43. Install high–low clutch hub and sleeve and the clutch hub face (with the heavy boss) must be facing the transfer input gear side (7).

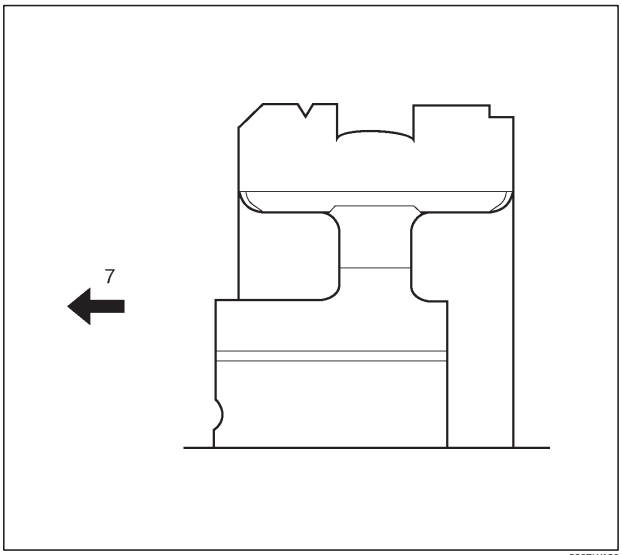

226RW136

44. Install input shaft assembly.
45. Install the snap ring to the input shaft.
46. Install the input shaft assembly to the transfer case.
47. Install the snap ring to the transfer case.

NOTE: The snap ring must be fully inserted into the transfer case snap ring groove.

48. Install the front companion flange temporarily and use the flange holder J–8614–11 and lock nut wrench J–37219 to install the lock nut.

Torque: 137 N·m (101 lb ft)

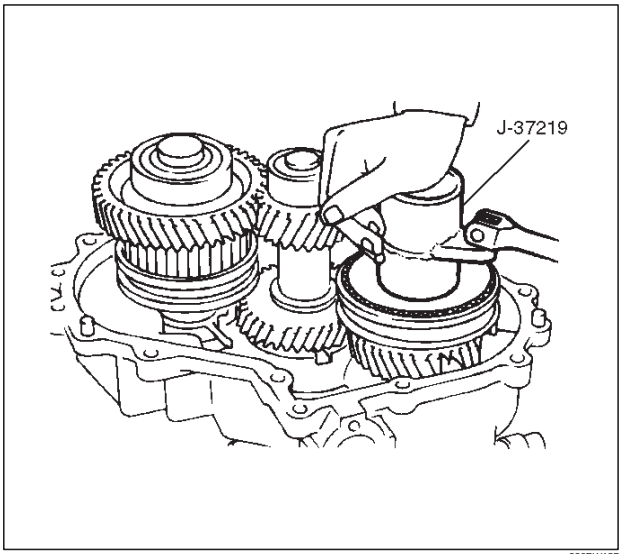

226RW137

49. Use the punch to stake the lock nut at one spot.

Downloaded from www.Manualslib.com manuals search engine

50. Install ball bearing, use a suitable drift and hammer to install the ball bearing.

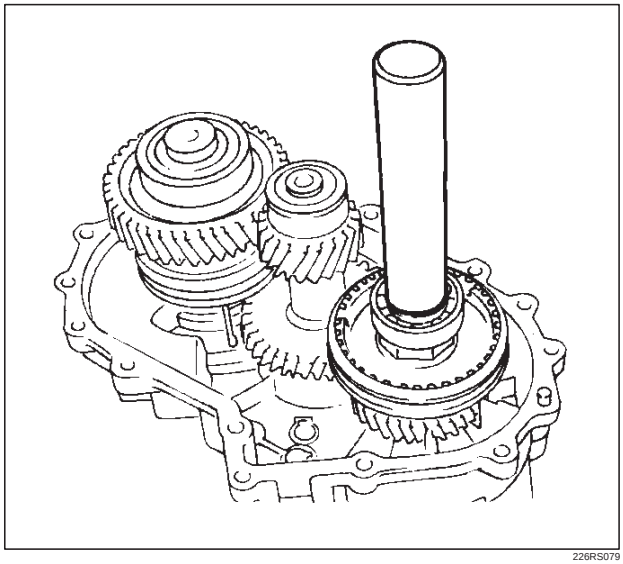

226RS079

51. Install bearing snap ring.

Downloaded from www.Manualslib.com manuals search engine

Main Data and Specifications

General Specifications

Type	Synchronized type gears shifting between the 2 and 4 wheel drive mode. Constant mesh type gears shifting between “low” and “high”.
Control method	Remote control with the gear shift lever on the floor for gear shifting between “low and high” . Electric control with the button switch on the instrument panel for gear shifting between the 2 and 4 wheel drive mode.
Gear ratio	High; 1.000 Low; 2.050
Oil capacity	1.45 lit. (1.53 U.S. quart)
Type of lubricant	Engine oil Refer to chart in Section 0

Torque Specifications

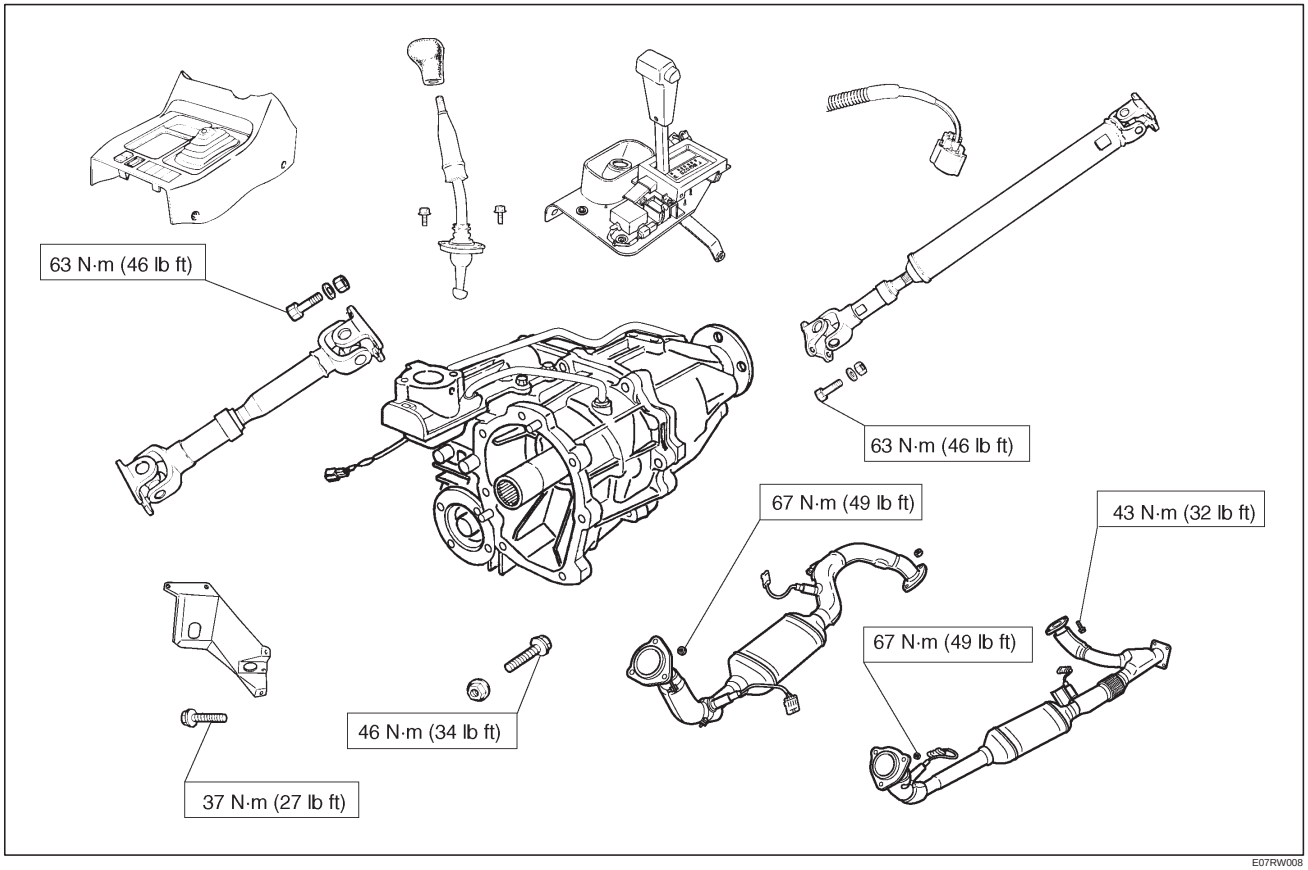

E07RW008

Downloaded from www.Manualslib.com manuals search engine

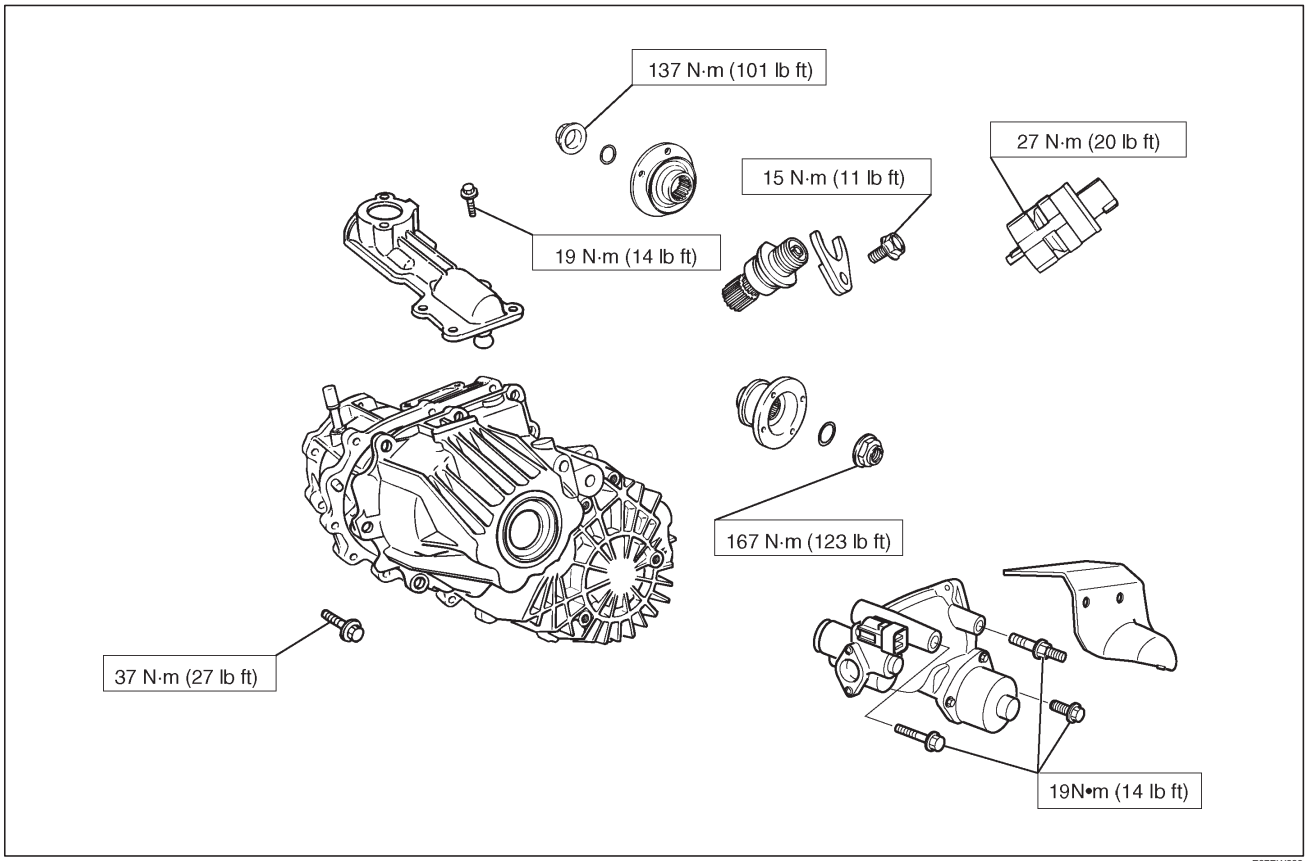

E07RW009

Downloaded from www.Manualslib.com manuals search engine

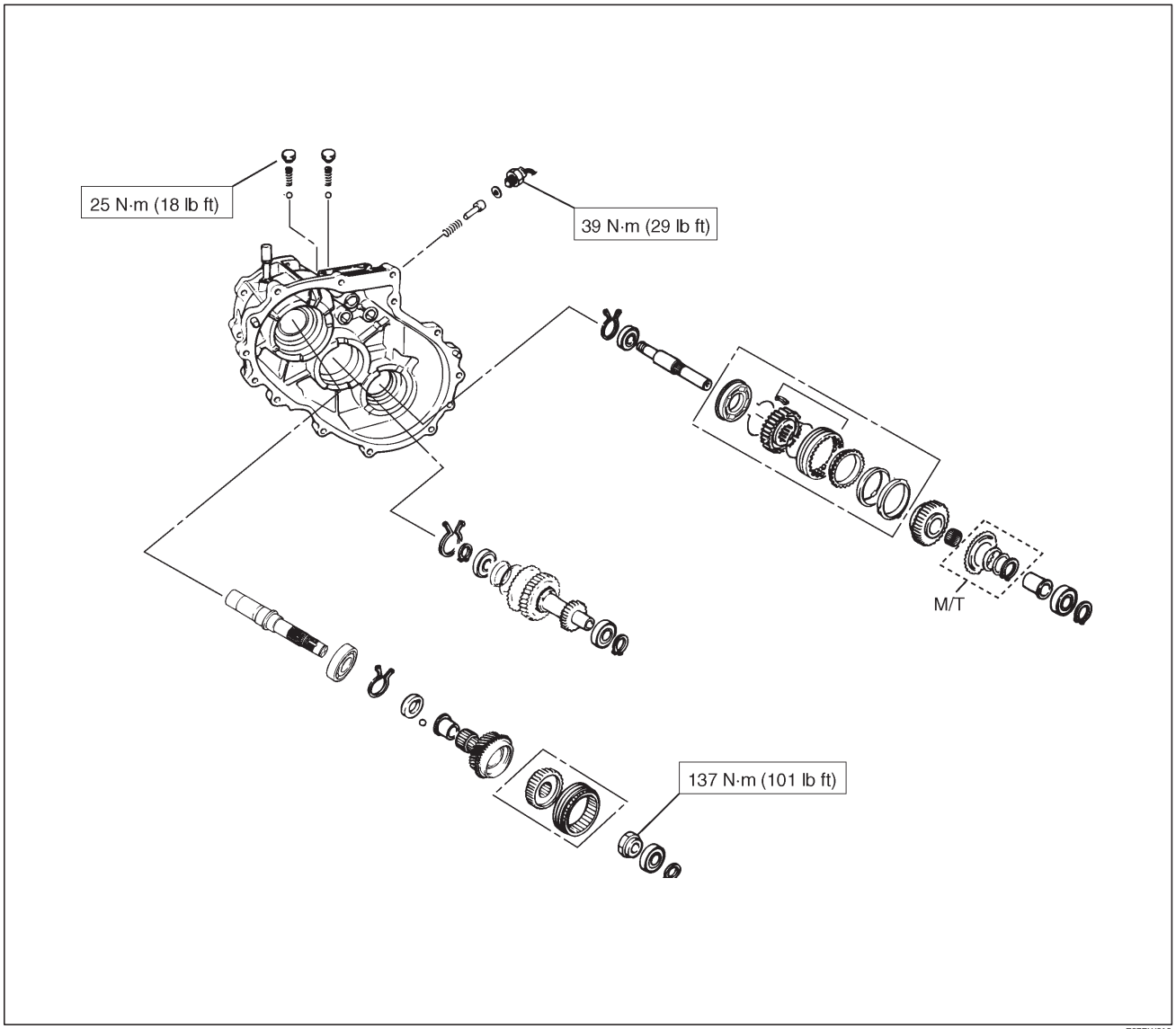

E07RW010

Downloaded from www.Manualslib.com manuals search engine

Special Tools

ILLUSTRATION	PART NO. PART NAME
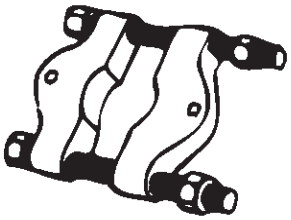 901RS258	**J–22912–01** Bearing remover/installer
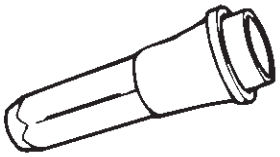 901RS269	**J–38592** Transfer case oil seal installer
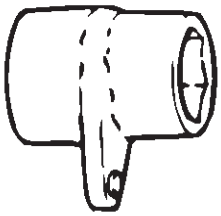 901RS255	**J–37219** Mainshaft nut wrench
901RS257	**J–37223** Rear output shaft and bearing installer
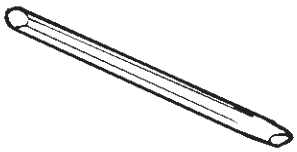 901RS263	**J–39209** Punch, end nut

ILLUSTRATION	PART NO. PART NAME
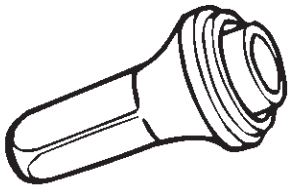 901RS271	**J–38594** Front output shaft oil seal installer
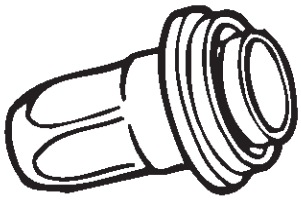 901RS272	**J–39208** Rear oil seal installer
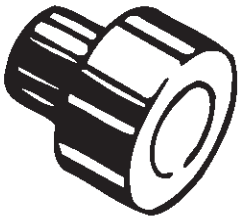 901RS273	**J–37486–A** Bearing installer adapter
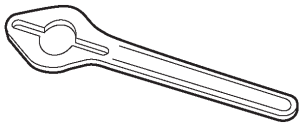 901RW071	**J–8614–11** Flange holder
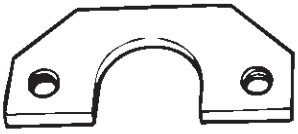 901RS274	**J–37217** Mainshaft end bearing remover

Downloaded from www.Manualslib.com manuals search engine

ILLUSTRATION	PART NO. PART NAME
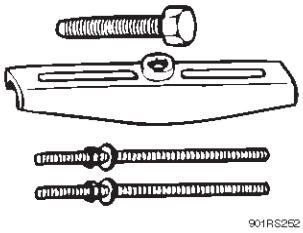	**J–37487** Puller
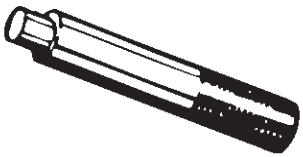	**J–8092** Driver handle

Downloaded from www.Manualslib.com manuals search engine

TROOPER

DRIVELINE/AXLE

TRANSFER CASE (TOD)

CONTENTS

Service Precaution 4D2–1
Transfer Case Assembly 4D2–2
Removal 4D2–2
Installation 4D2–3
Transfer Rear Oil Seal 4D2–5
Transfer Rear Oil Seal and Associated Parts 4D2–5
Removal 4D2–5
Installation 4D2–5
TOD ECU 4D2–7
Removal 4D2–7
Installation 4D2–7
Unit Repair 4D2–8
Inspection 4D2–8
Transfer Case 4D2–9
Disassembled View 4D2–9
Disassembly 4D2–9
Reassembly 4D2–10
Transfer Cover Assembly 4D2–12
Disassembled View 4D2–12
Disassembly 4D2–12
Reassembly 4D2–14
Transfer Case Assembly Clutch Pack and Clutch Cam 4D2–16
Disassembled View 4D2–16
Disassembly 4D2–16
Sprocket and Mechanical Lock 4D2–18
Disassembled View 4D2–18
Disassembly 4D2–18
Output Shafts and Shift Control Shaft 4D2–20
Disassembled View 4D2–20
Disassembly 4D2–21
Transfer Case 4D2–23
Disassembled View 4D2–23
Disassembly 4D2–24
Inspection and Repair 4D2–26
Transfer Case 4D2–30
Disassembled View 4D2–30
Reassembly 4D2–30
Output Shafts and Shift Control Shaft 4D2–33
Disassembled View 4D2–33
Reassembly 4D2–33
Sprocket and Mechanical Lock 4D2–36
Disassembled View 4D2–36
Reassembly 4D2–36
Clutch Pack and Clutch Cam 4D2–38
Disassembled View 4D2–38
Reassembly 4D2–38
Main Data and Specifications 4D2–40
Special Tools 4D2–42

Service Precaution

WARNING: THIS VEHICLE HAS A SUPPLEMENTAL RESTRAINT SYSTEM (SRS). REFER TO THE SRS COMPONENT AND WIRING LOCATION VIEW IN ORDER TO DETERMINE WHETHER YOU ARE PERFORMING SERVICE ON OR NEAR THE SRS COMPONENTS OR THE SRS WIRING. WHEN YOU ARE PERFORMING SERVICE ON OR NEAR THE SRS COMPONENTS OR THE SRS WIRING, REFER TO THE SRS SERVICE INFORMATION. FAILURE TO FOLLOW WARNINGS COULD RESULT IN POSSIBLE AIR BAG DEPLOYMENT, PERSONAL INJURY, OR OTHERWISE UNNEEDED SRS SYSTEM REPAIRS.

CAUTION: Always use the correct fastener in the proper location. When you replace a fastener, use ONLY the exact part number for that application. ISUZU will call out those fasteners that require a replacement after removal. ISUZU will also call out the fasteners that require thread lockers or thread sealant. UNLESS OTHERWISE SPECIFIED, do not use supplemental coatings (Paints, greases, or other corrosion inhibitors) on threaded fasteners or fastener joint interfaces. Generally, such coatings adversely affect the fastener torque and the joint clamping force, and may damage the fastener. When you install fasteners, use the correct tightening sequence and specifications. Following these instructions can help you avoid damage to parts and systems.

Downloaded from www.Manualslib.com manuals search engine

Transfer Case Assembly

Removal

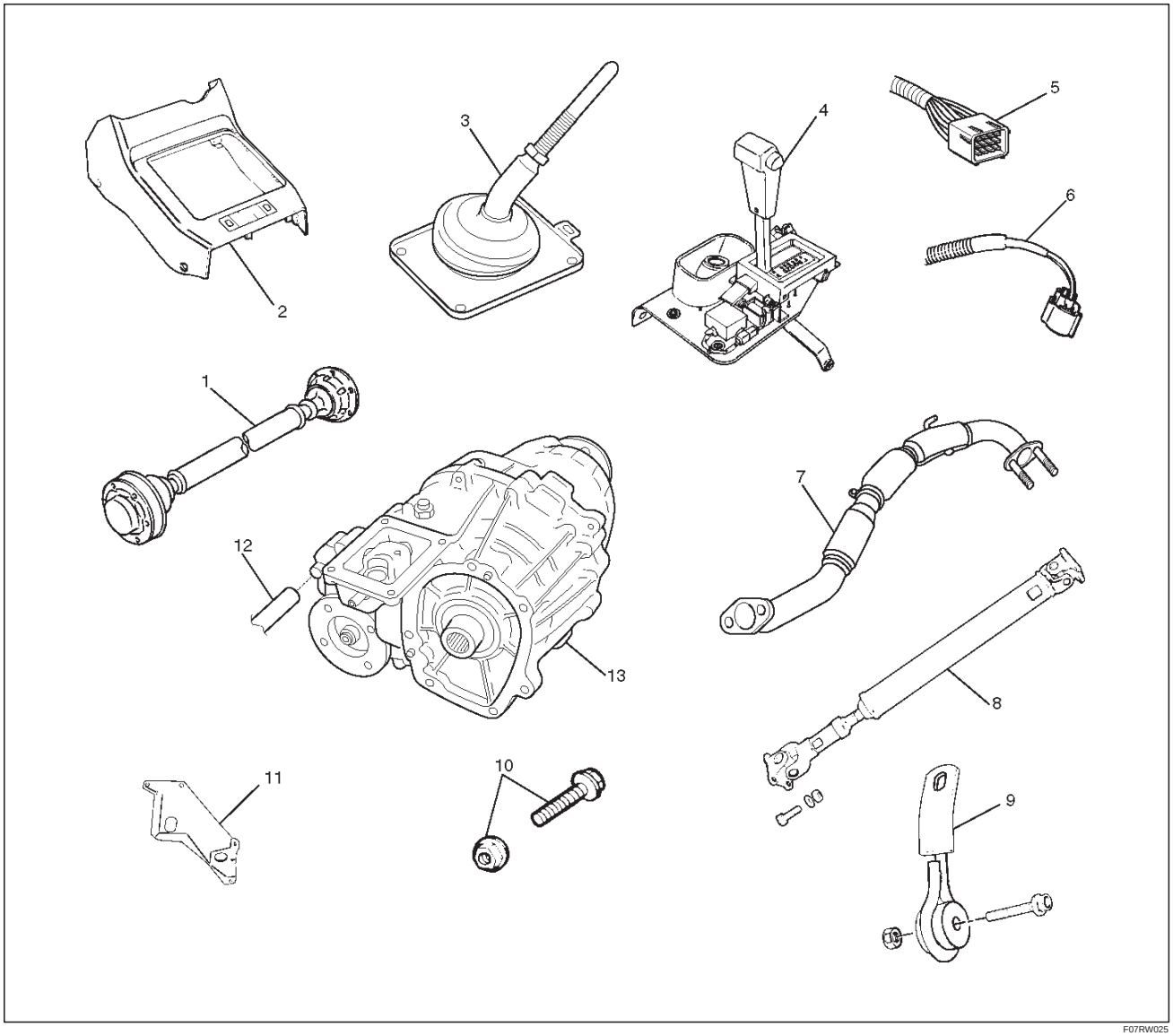

F07RW025

1. Disconnect the battery cable (-).
2. Remove transfer protector.
3. Remove rear propeller shaft.
4. Remove front propeller shaft.
5. Remove center console.

Downloaded from www.Manualslib.com manuals search engine

6. Uncouple the shift control rod from the select lever assembly.

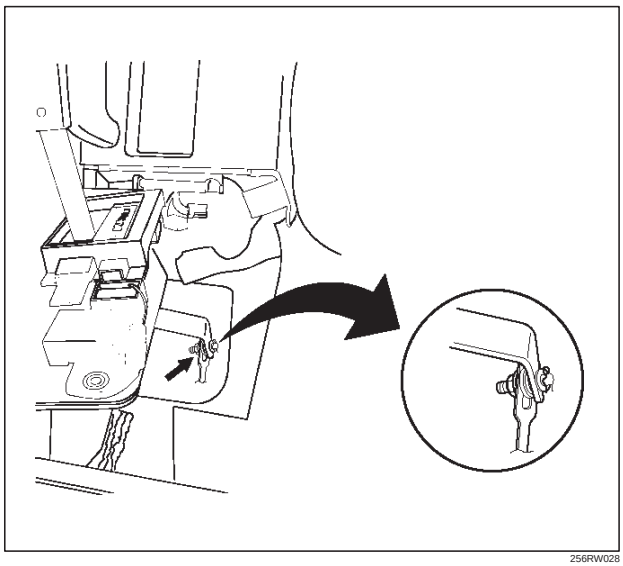

256RW028

7. Place the select lever assembly near the end.
8. Remove transfer control lever.
9. Remove breather hose.
10. Remove the exhaust pipe set bolts and nuts, and shift the pipe to the end.
11. Remove the right cross member hanger and shift the proper shaft to the end.

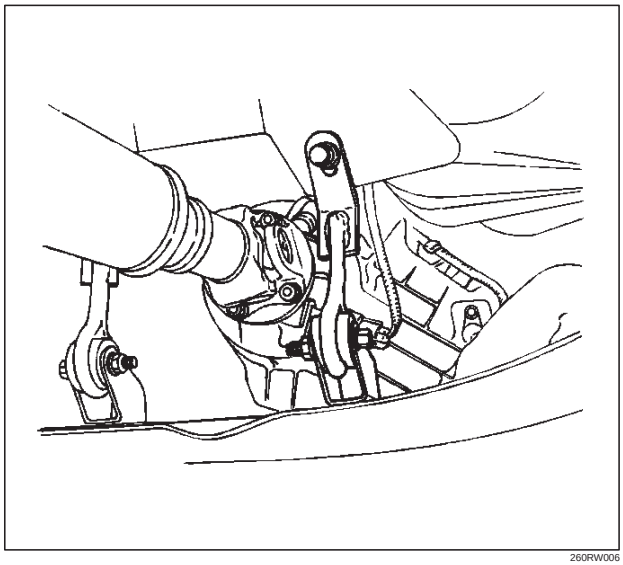

260RW006

12. Unplug the 4WD switch connector from the transmission harness.
13. Unplug the transfer connector from the top of the transfer case.
14. Support the transfer case with a jack.
15. Remove the four bolts and three nuts from the transfer case.
16. Remove transfer case assembly.

Installation

Pay attention to the following points.

1. Apply grease (Besco L2) or equivalent to the input shaft spline.

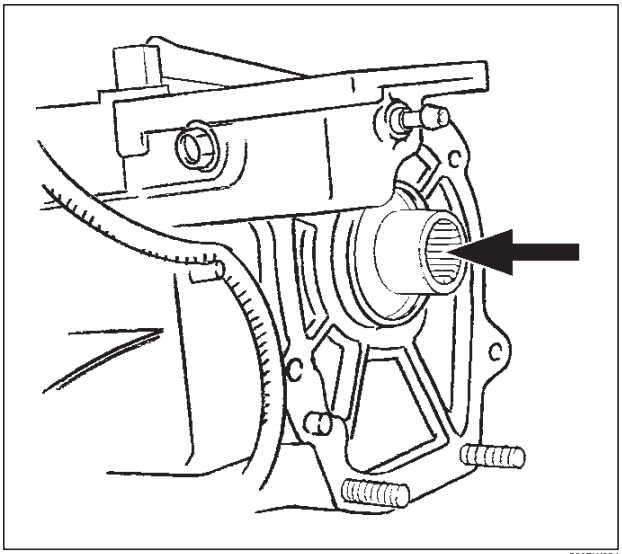

261RW024

2. Mount the transfer case.

Downloaded from www.Manualslib.com manuals search engine

3. Tighten the transfer case bolts (see the figure below).

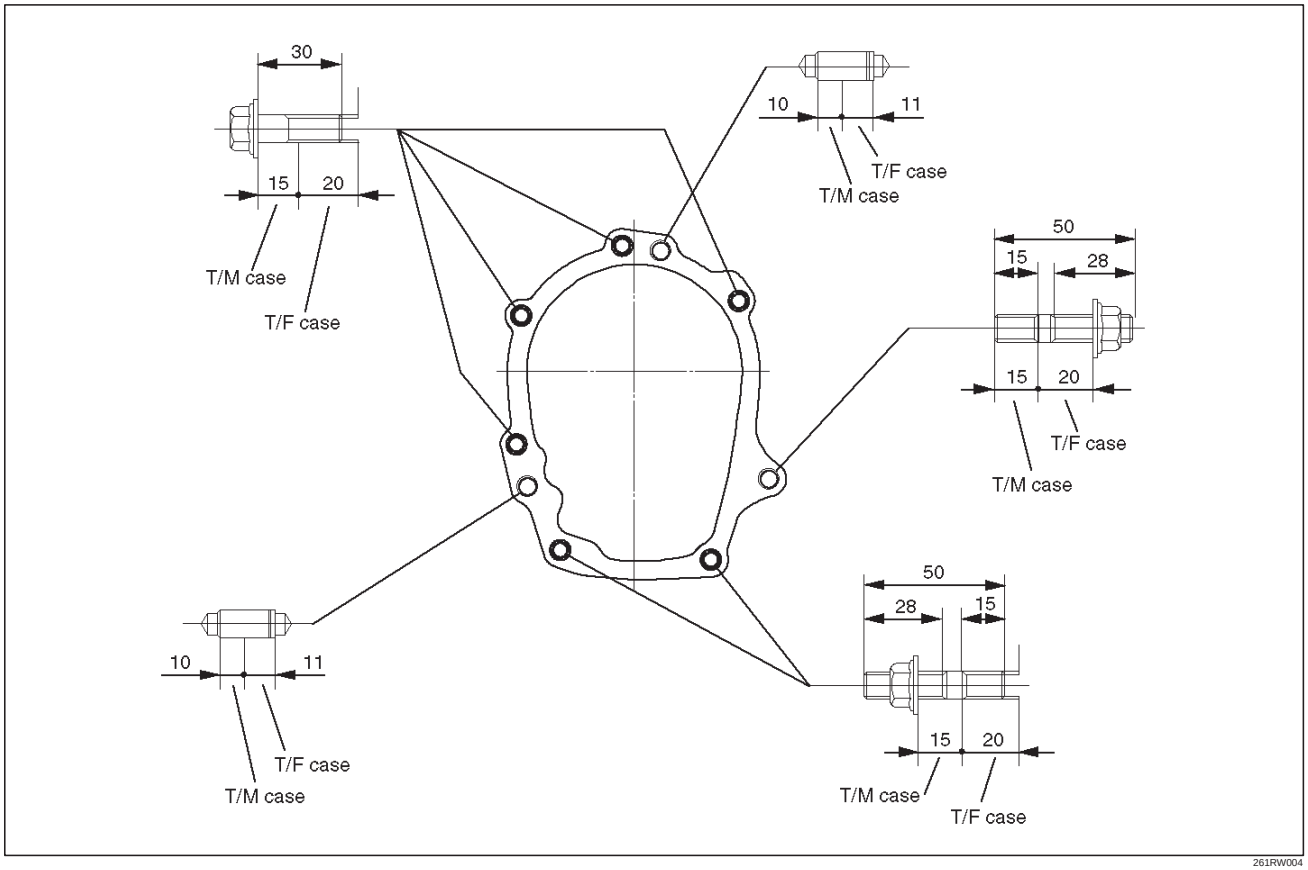

4. Tighten propeller shaft bolt.

Torque : 63 N·m (46 lb ft)

Downloaded from www.Manualslib.com manuals search engine

Transfer Rear Oil Seal

Transfer Rear Oil Seal and Associated Parts

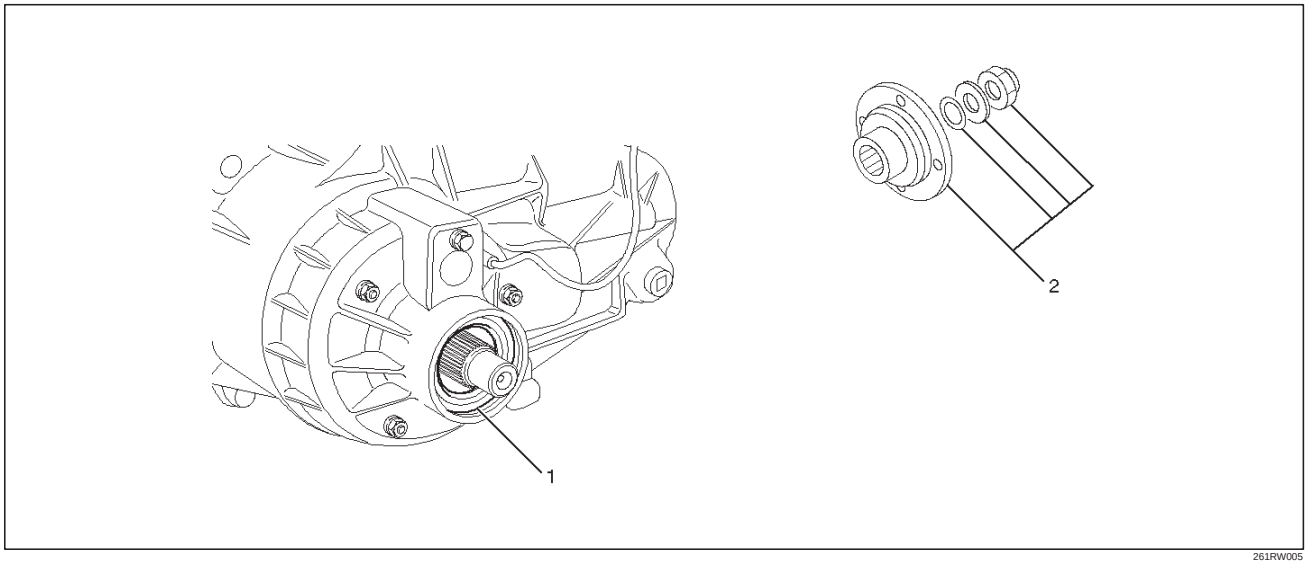

261RW005

Legend
(1) Oil Seal
(2) End Nut and Rear Companion Flange

Removal

1. Uncouple the rear propeller shaft from the transfer case.
2. Using the flange holder J-8614-11, remove the end nut.
3. Using the universal puller, remove the rear companion flange and O-ring.
4. Remove the oil seal from the transfer rear case.

Installation

1. Apply oil to the circumference of the oil seal. Fill the oil seal lip with grease (Besco L2).

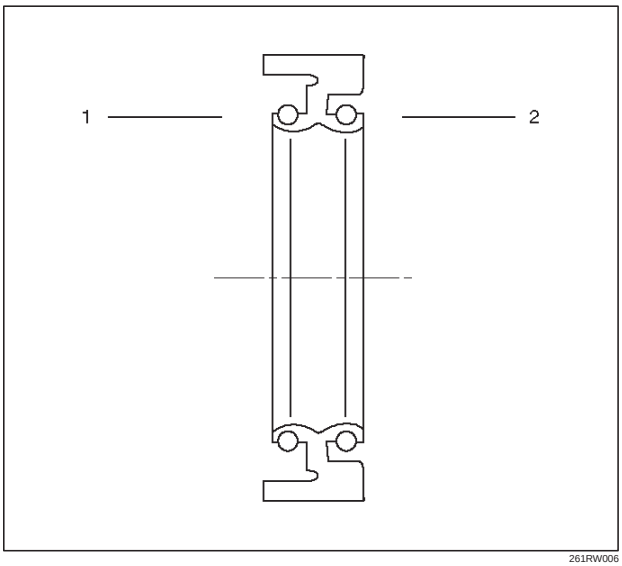

261RW006

Legend
(1) Inside
(2) Outside

Downloaded from www.Manualslib.com manuals search engine

2. Using the oil seal installer J-42804, attach the oil seal.

NOTE: When attaching the oil seal, pay attention to the direction.

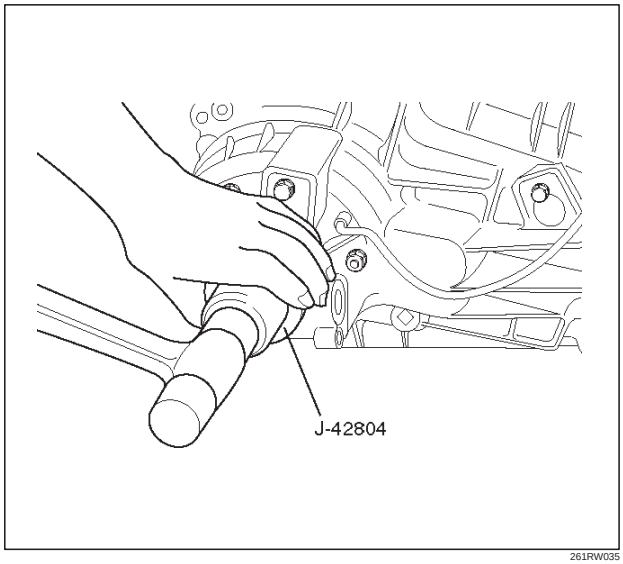

261RW035

3. Mount the rear companion flange, O-ring , washer, and nuts to the transfer in this order.
4. Using the flange holder J-8614-11, set the end nut.

   Torque : 167 N·m (123 lb ft)
5. Using the punch J-39209, stake the end nut at two places.

NOTE: Check the staked end nut is free from cracks.

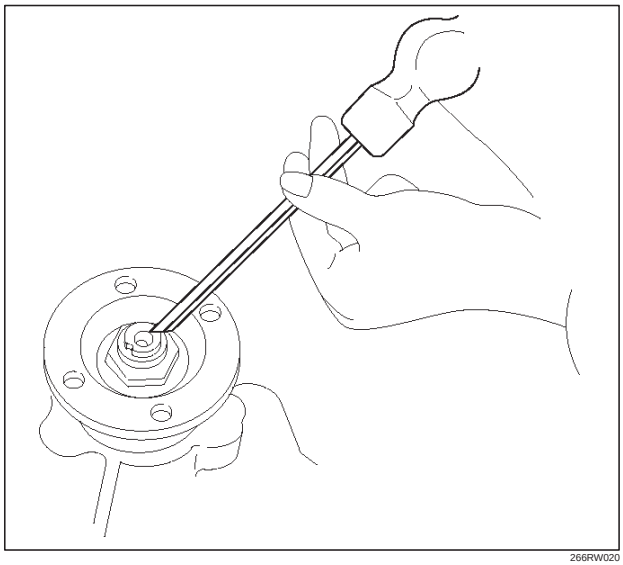

266RW020

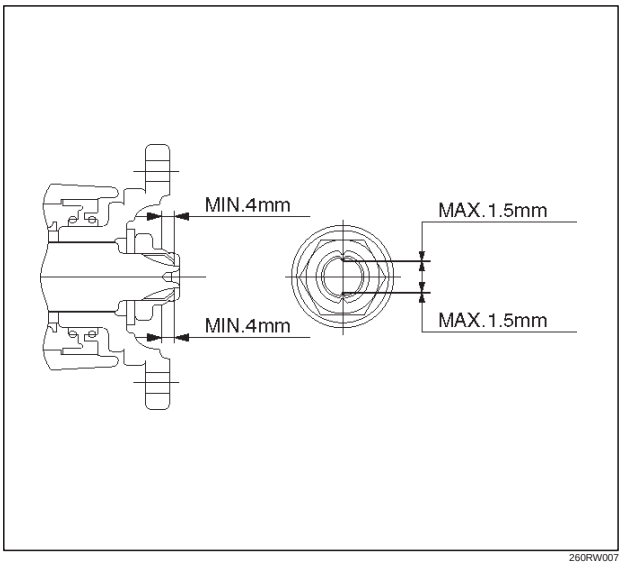

260RW007

6. Connect the rear propeller shaft to the transfer case and tighten to the specified torque.

   Torque : 63 N·m 46 (lb ft)

Downloaded from www.Manualslib.com manuals search engine

TOD ECU

Removal

1. Disconnect the battery cable (-).
2. Move the passenger seat forward and remove the second seat foot rest (1).
3. Unplug the connector from the ECU (2).
4. Remove the set bolts and detach the ECU (2) from the bracket.

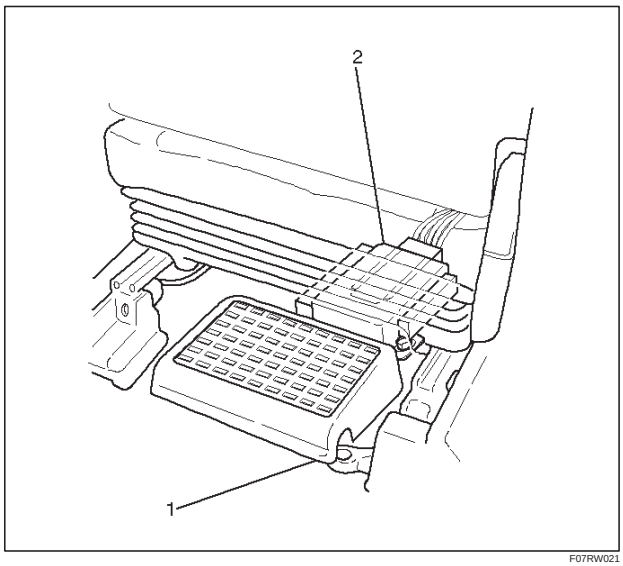

F07RW021

Installation

1. Perform the removal step in reverse order.

Downloaded from www.Manualslib.com manuals search engine

Unit Repair

Inspection

Before disassembling and after assembling, check the following items on the transfer connector terminals.

No.	NAME	CONTENTS
1	Ref . (Ref .)	Rear speed sensor reference output
2	Ref . (Frt .)	Front speed sensor reference output
3	SW GND	SW GND
4	4H SW (+)	4H SW plus terminal
5	Rer . (+)	Rear speed sensor plus
6	Frt . (+)	Front speed sensor plus
7	POWER GND	Power GND
8	SOL (+)	Electromagnetic solenoid
9	COM (–) (Ref .)	Rear speed sensor GND
10	COM (–) (Frt .)	Front speed sensor GND
11	NC	
12	4L SW (+)	4L SW plus terminal

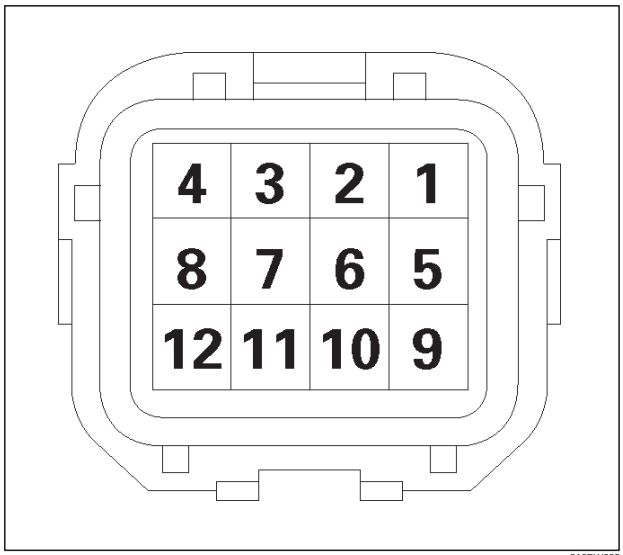

810RW002

4H and 4L switches

Check whether the 4H switch (terminals 4 and 7) and 4L switch (terminals 12 and 3) work as specified in the table below. If yes, the continuity is established on these switches. If not, check the switches, shift rails, transfer case, and rear cover, and replace the failed parts.

Position	High	Neutral	4L
4H SW	OFF	ON	OFF
4L SW	OFF	ON	ON

Power GND

Check that there is a continuity between the power GND pin (terminal 7) and transfer case. If not, replace the grounding wire.

Resistance of electromagnetic coil

Check the resistance between electromagnetic clutch solenoid (terminal 8) and power GND (terminal 7). If not, replace the electromagnetic coil.

Standard : 1.4 ~ 2.0Ω

Allowable : 1.0 ~ 5.0Ω

Downloaded from www.Manualslib.com manuals search engine

Transfer Case

Disassembled View

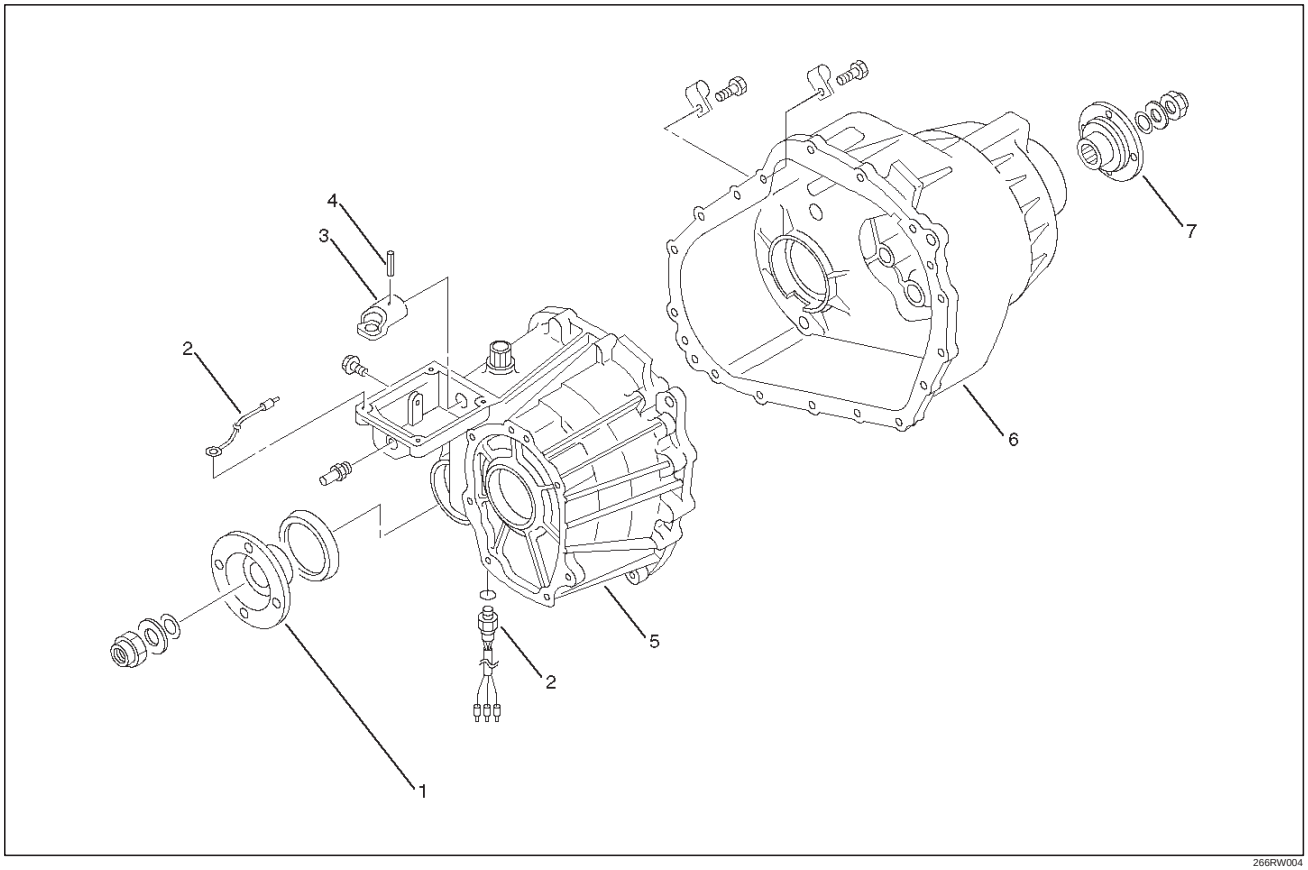

266RW004

Legend

(1) Front Companion Flange
(2) 4H and 4L Switch, Grounding Cable, and Center Connector
(3) Offset Lever
(4) Spring Pin
(5) Transfer Case Assembly
(6) Transfer Cover Assembly
(7) Rear Companion Flange

Disassembly

1. Remove the drain plug from the transfer case and drain the oil.
2. Disconnect the 4H and 4L switch and grounding cable.
3. Remove the clip fixing the harness.
4. Remove front companion flange and using the flange holder J-8614-11, remove the flange nut.
5. Remove rear companion flange and using the flange holder J-8614-11, remove the flange nut.

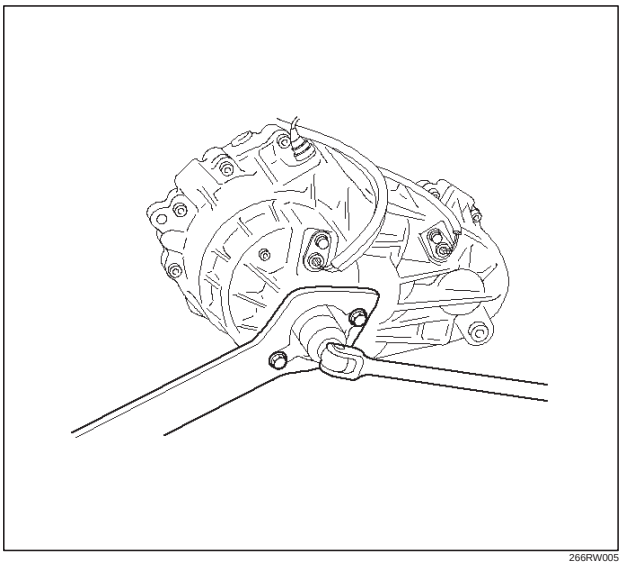

266RW005

Downloaded from www.Manualslib.com manuals search engine

6. Remove the offset lever set bolt on the right side.

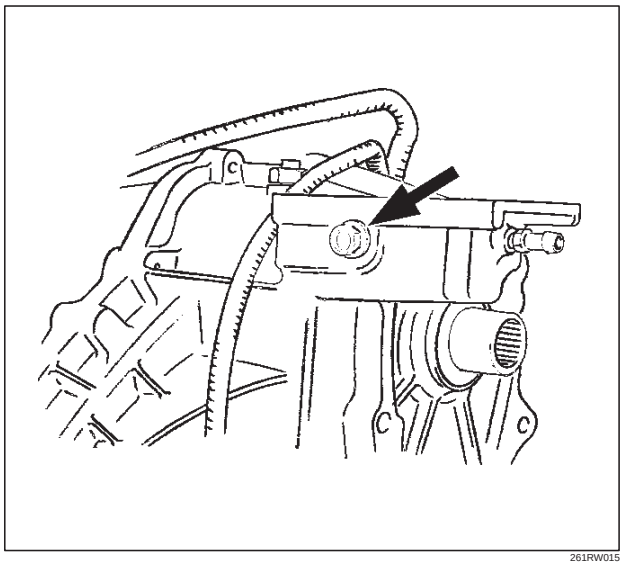

261RW015

7. Remove the offset lever lock spring pin.

NOTE: When removing the spring pin, pay attention to the recess position of the pin.

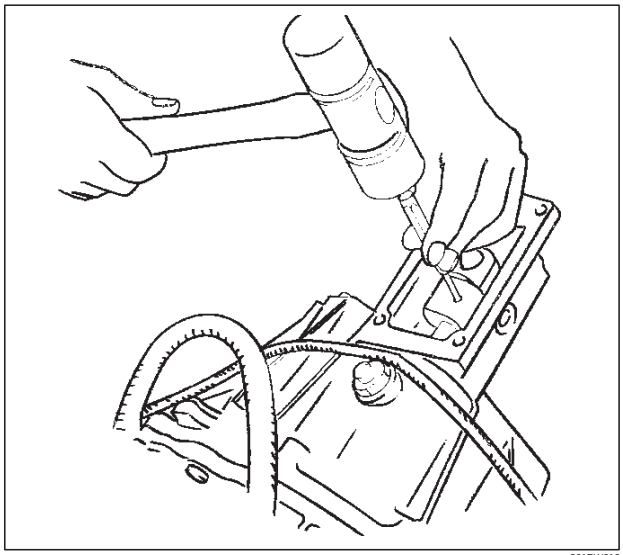

261RW016

8. Remove the offset lever.

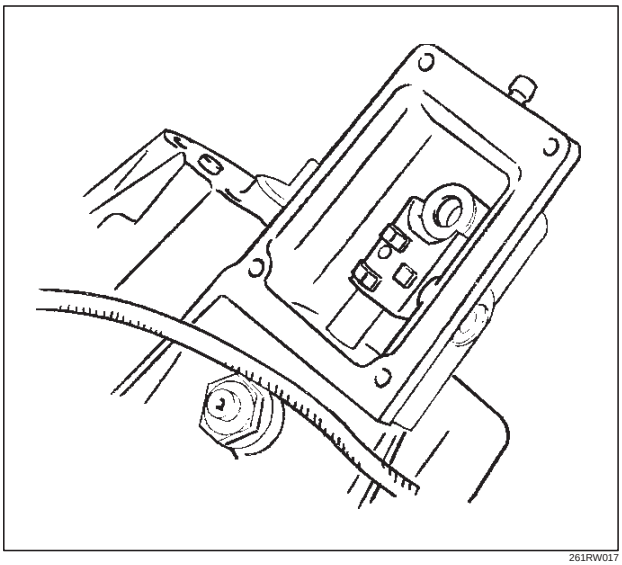

261RW017

9. Remove the sixteen bolts and detach the transfer cover assembly from the transfer cable assembly.

NOTE: When removing the transfer cover assembly, pay attention not to damage the oil seal.

Reassembly

1. Apply liquid gasket (Loctite 598 or equivalent) uniformly to the mating face that contacts the transfer case.

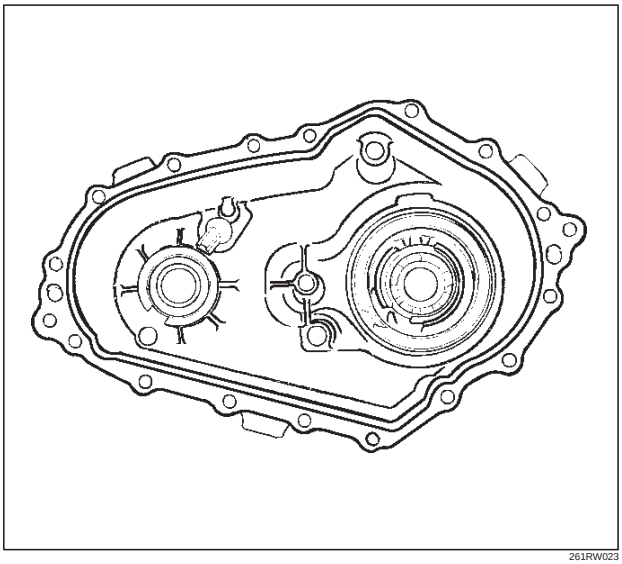

261RW023

Downloaded from www.Manualslib.com manuals search engine

2. Tighten the sixteen bolts with the specified torque.

   Torque : 31 N·m (23 lb ft)

3. Wind the sealing tape around the drain plug thread and tighten the plug with the specified torque.

   Torque : 25 N·m (18 lb ft)

4. Install offset lever.
5. Mount the offset lever to the transfer shift and attach the spring pin.

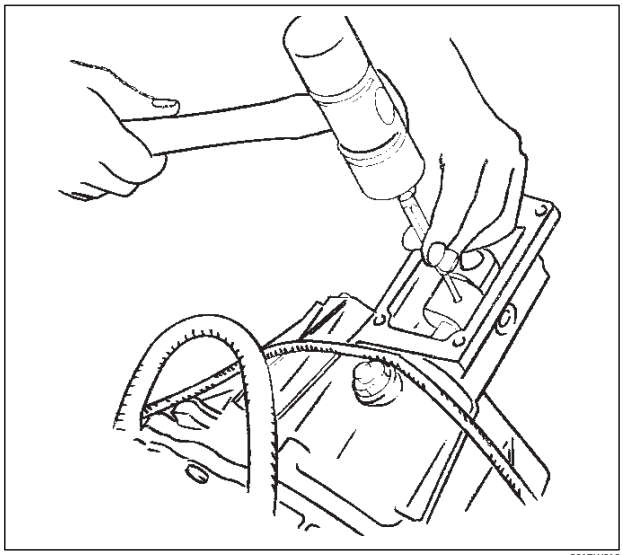

261RW016

6. Install rear and front companion flange.
7. Attach the O-ring and washer to the companion flange.

NOTE: Securely push the O-ring to the dent of the companion flange, and then attach the washer.

8. Use the flange holder J-8614-11 to tighten the flange nuts to transfer case.
9. Tighten the flange nut with the specified torque.

   Torque : 167 N·m (123 lb ft)

10. Using the punch J-39209, securely stake the flange nut at two places

NOTE: Check the staked flange nut is free from cracks.

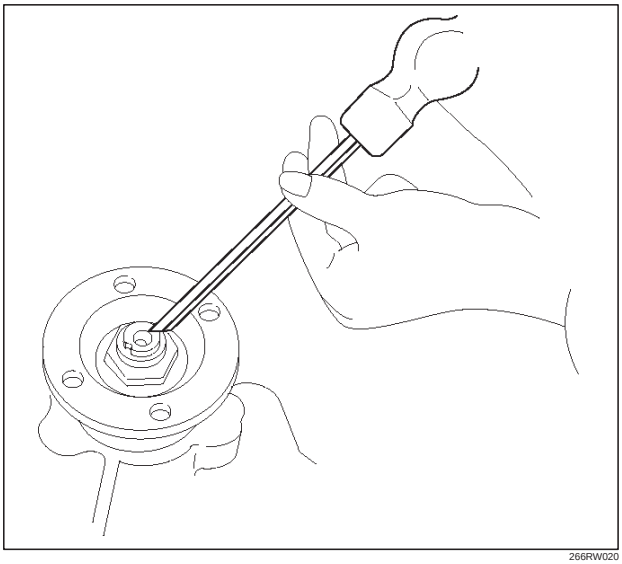

266RW020

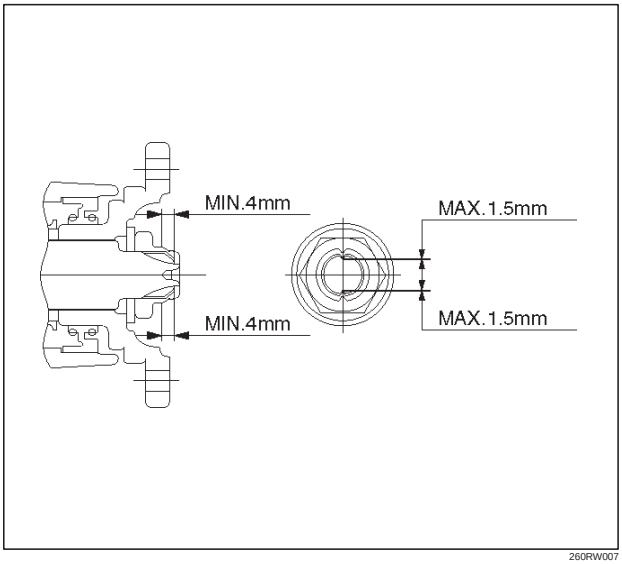

260RW007

11. Fix the harness with the clip.
12. Tighten the 4L and 4H switch to the specified torque.

    Torque : 16 N·m (12 lb ft)

13. Fill the transfer case with ATF II or III (1.9 liters).
14. Wind the sealing tape around the filler plug thread and tighten the plug with the specified torque.

    Torque : 25 N·m (18 lb ft)

Downloaded from www.Manualslib.com manuals search engine

Transfer Cover Assembly

Disassembled View

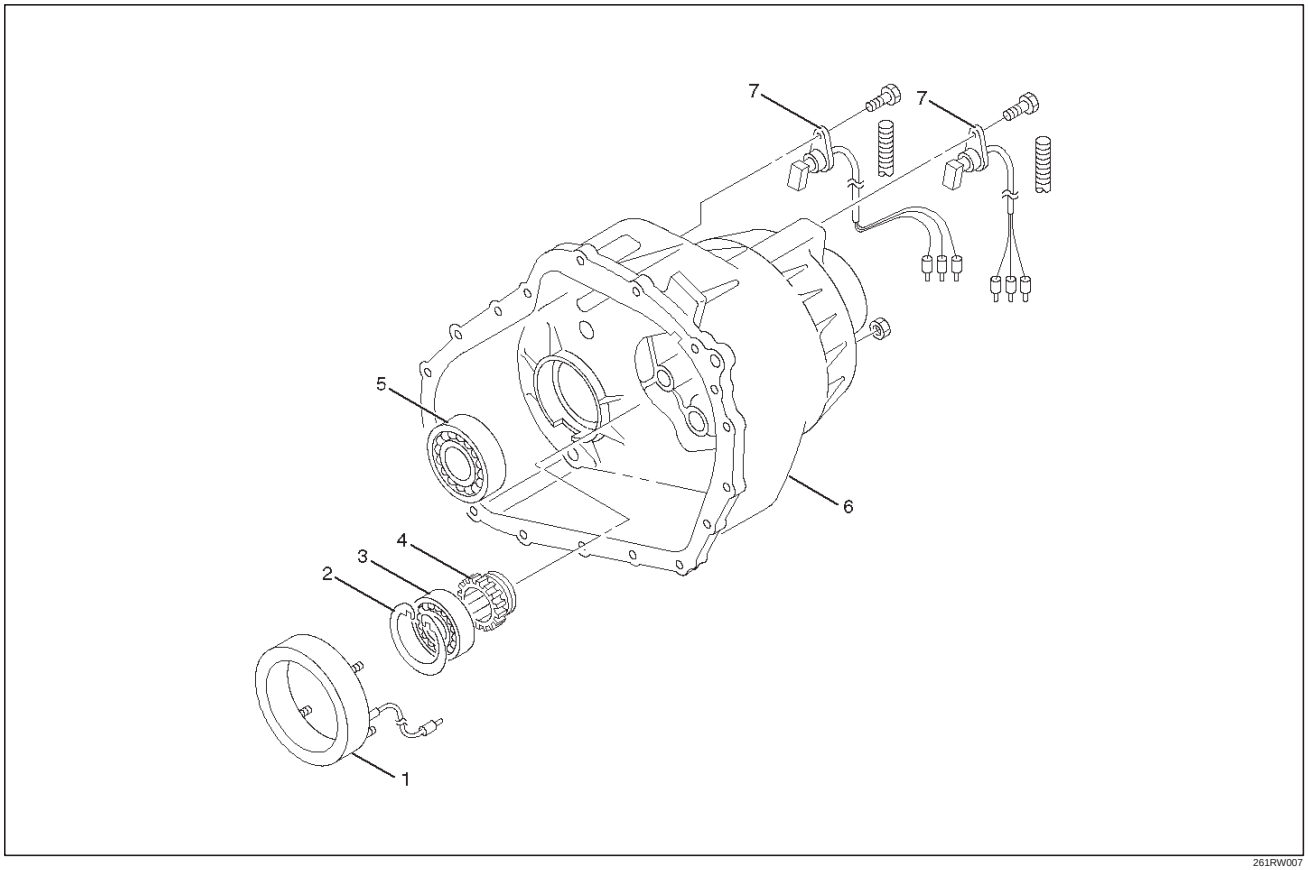

261RW007

Legend

(1) Coil Assembly
(2) Snap Ring
(3) Ball Bearing
(4) Speed Gear and Tone Wheel
(5) Ball Bearing
(6) Transfer Cover Assembly
(7) Front and Rear Speed Sensors

Disassembly

1. Using snap ring pliers, remove the snap ring.

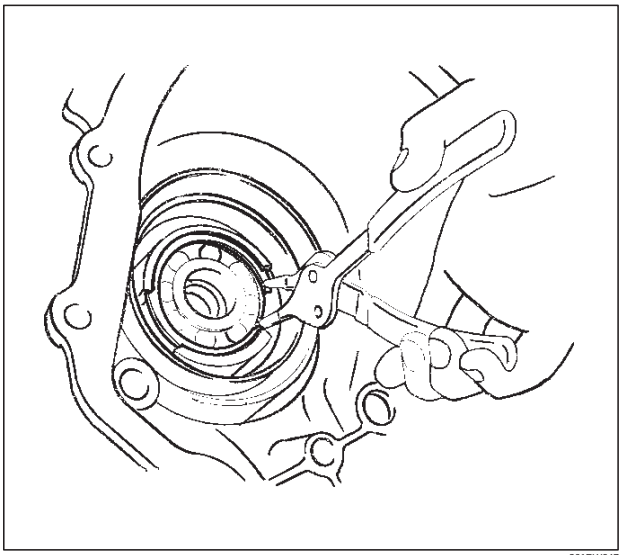

261RW047

Downloaded from www.Manualslib.com manuals search engine

2. Remove ball bearing.
3. Strike the speed gear and tone wheel with a rod or other appropriate tool from the outside of the transfer cover assembly, and remove the ball bearing and speed gear and tone wheel.

NOTE: Pay attention not to damage the speed gear teeth.

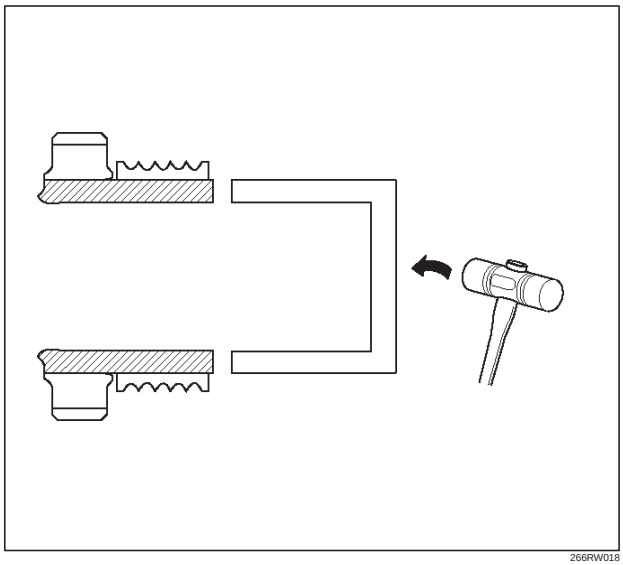

266RW018

4. Remove the stopper plate on the back with a precision screwdriver or other appropriate tool starting from the small lock of the plate.

NOTE: Pay attention not to damage the stopper plate during the work.

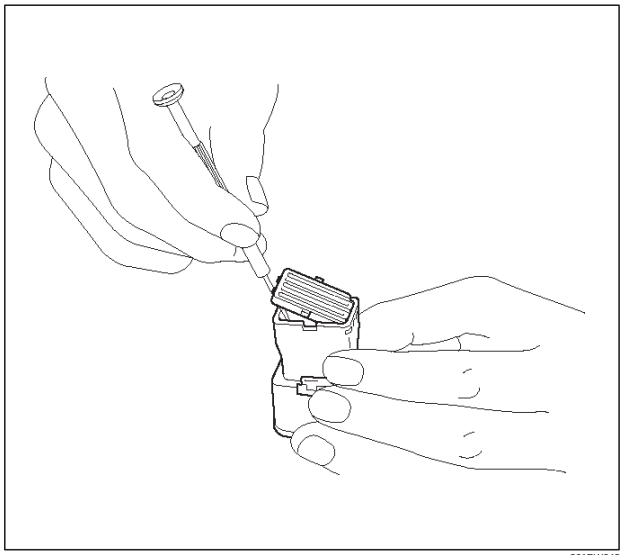

261RW042

5. Using a terminal pull-out tool or an equivalent tool, push down the lock to unlatch the terminal for the coil assembly, and pull the terminal out.

NOTE: Pay attention not to damage other terminals.

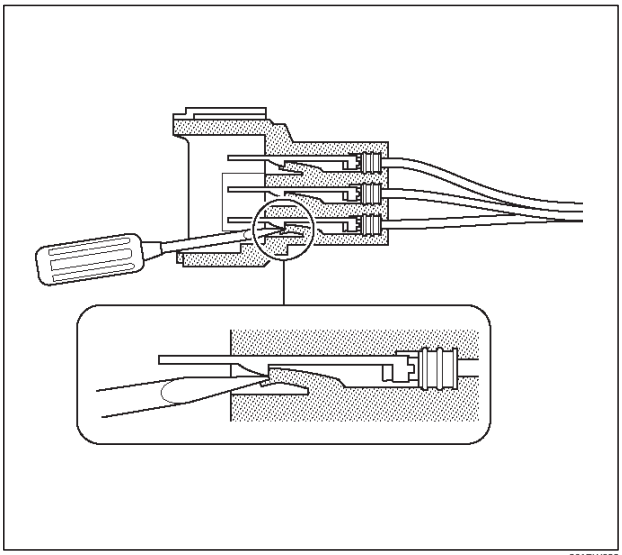

261RW032

6. Remove the set bolts of the cam&coil housing from the outside of the transfer cover assembly. Remove the housing from the transfer cover.

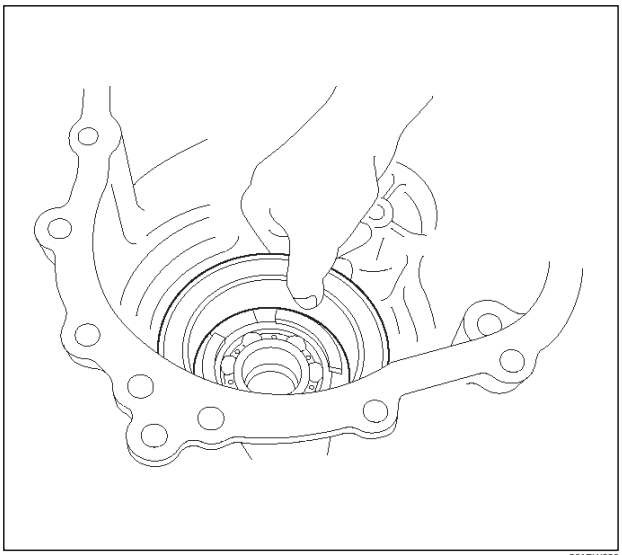

261RW030

Downloaded from www.Manualslib.com manuals search engine

7. Using the bearing remover J-42805 and slide hammer J-2619-01, remove the ball bearing for the front output shaft.

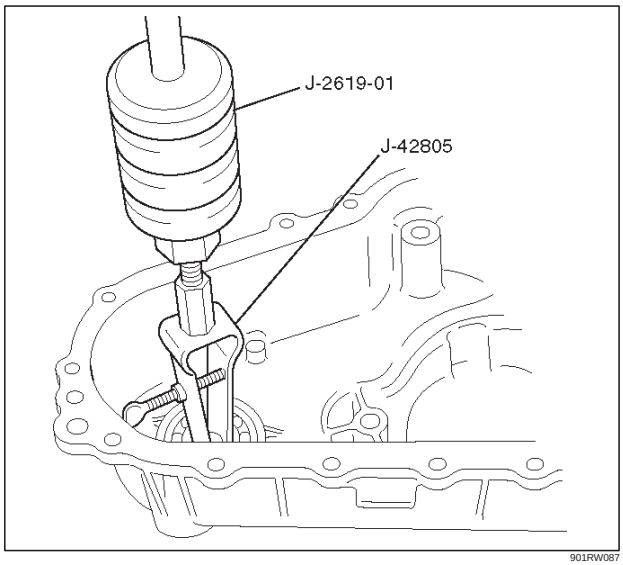

901RW087

8. Remove the bolts and front and rear speed sensors.

NOTE: Pay attention not to damage the speed sensors during the work.

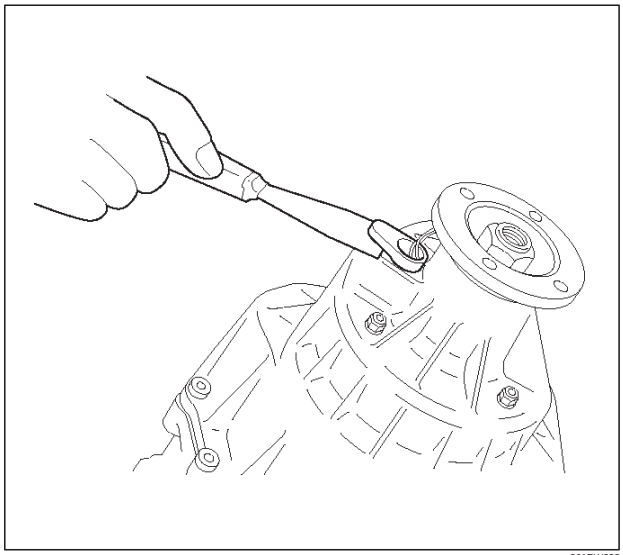

261RW033

Reassembly

1. Remove the oil seal from the transfer cover assembly.
2. Apply oil to the circumference of the new oil seal and fill the lip with grease (Besco L2 or equivalent).
3. Using the oil seal installer J-42804, attach the oil seal to the transfer cover assembly.

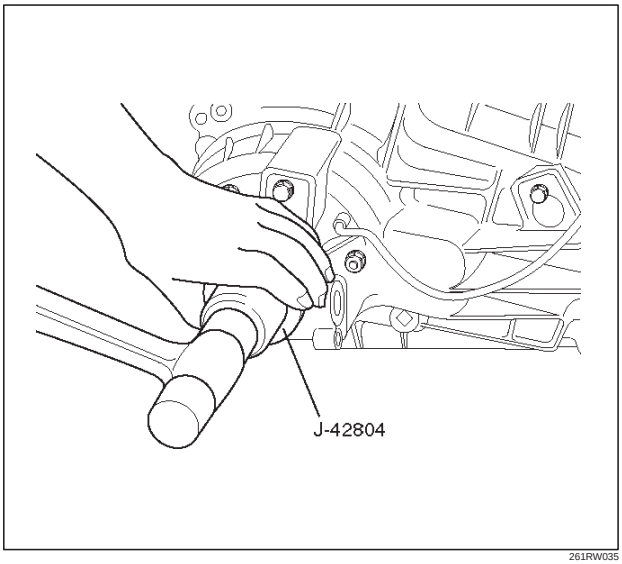

261RW035

4. Apply grease to the seal ring of each front and rear speed sensor, and mount the sensor carefully.
5. Tighten the bolt with the specified torque.

   Torque : 5 N·m (43 lb in)

NOTE: Pay attention not to mount the front (or rear) sensor to the rear (or front) sensor position.

6. Mount the ball bearing (1) for the front output shaft flat as shown in the figure.

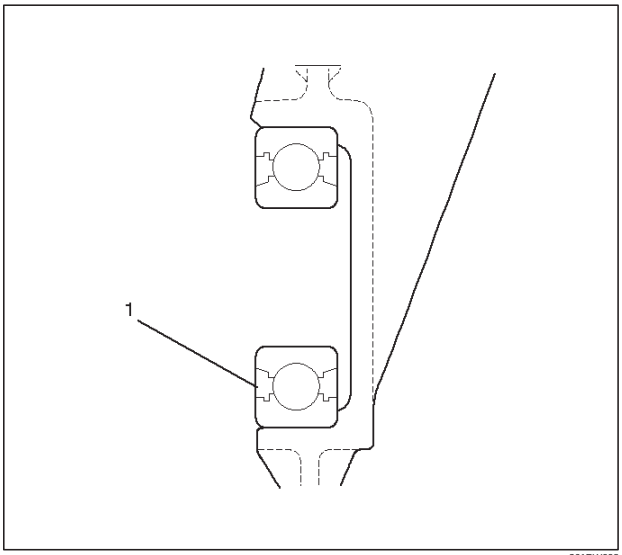

261RW008

Downloaded from www.Manualslib.com manuals search engine

7. Mount the coil assembly and tighten the set nuts with the specified torque.

Torque : 10 N·m (87 lb in)

8. Plug the terminal in the central connector.

NOTE: Pay attention not to damage other terminals.

9. Install speed gear and tone wheel.
10. Mount the ball bearing (2) flat as shown in the figure.

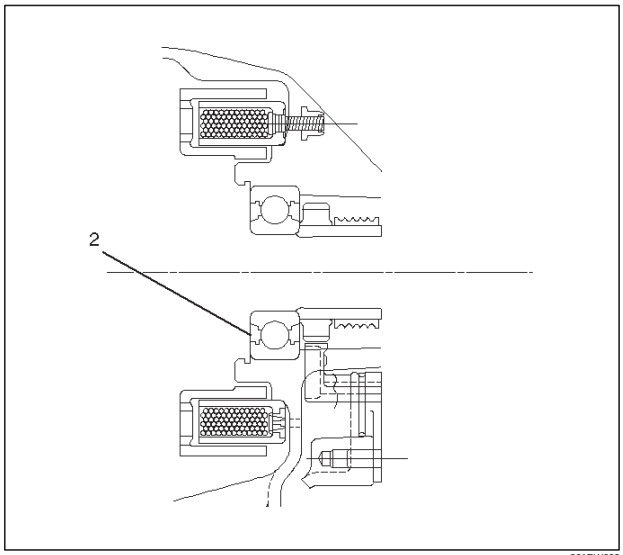

261RW009

11. Using snap ring pliers, attach the snap ring to the transfer cover assembly.

NOTE: Securely mount the snap ring to the groove of the transfer cover assembly.

Downloaded from www.Manualslib.com manuals search engine

Transfer Case Assembly Clutch Pack and Clutch Cam

Disassembled View

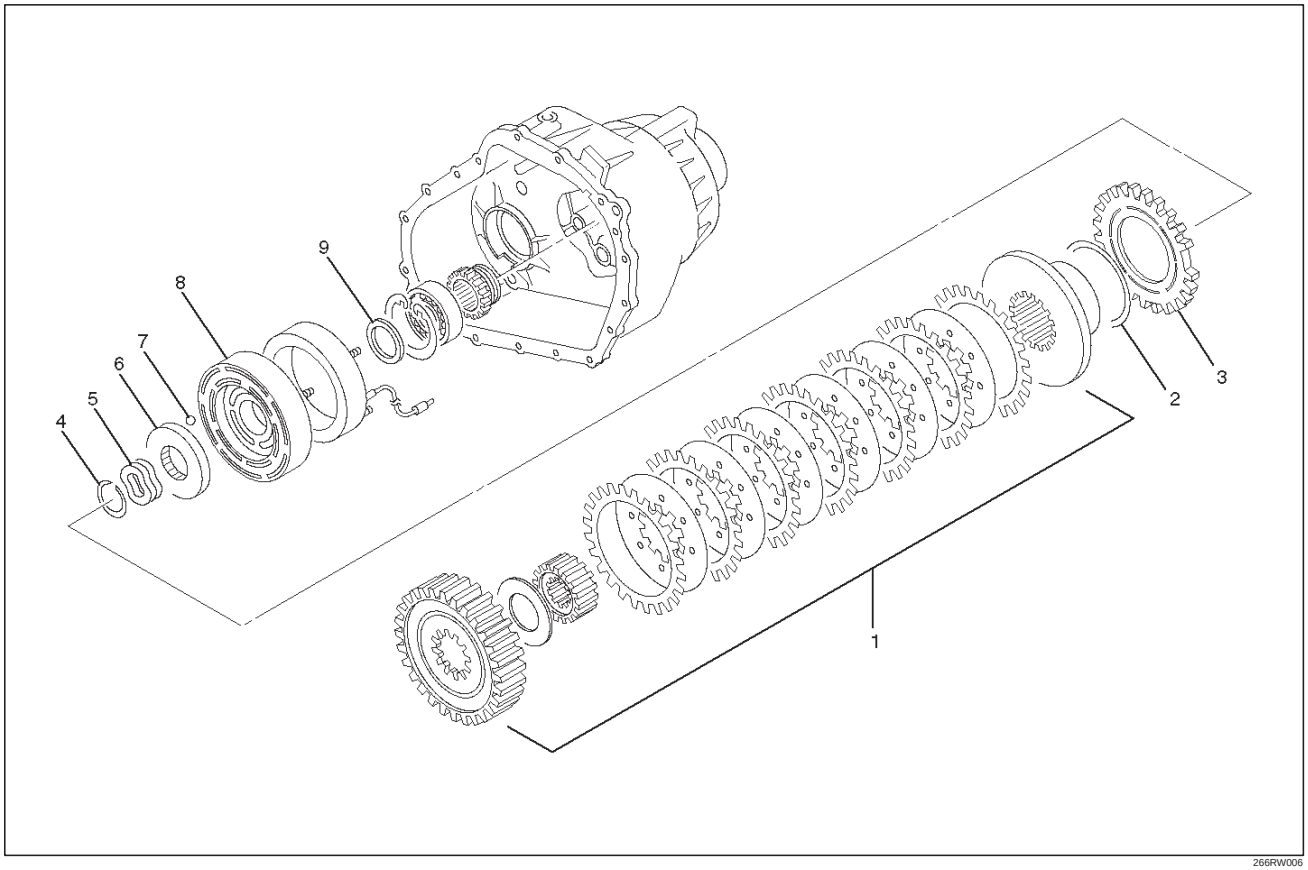

266RW006

Legend

(1) Clutch Pack Assembly
(2) Insulator Washer
(3) Armature Plate
(4) Snap Ring
(5) Wave Spring
(6) Cam Pulley
(7) Cam Ball
(8) Cam and Coil Housing
(9) Thrust Bearing

Disassembly

1. Remove thrust bearing.
2. Remove cam and coil housing.

NOTE: When the cam and coil housing is removed, the cam balls may be detached together with the housing. Pay attention not to lose the ball.

3. Remove cam ball.

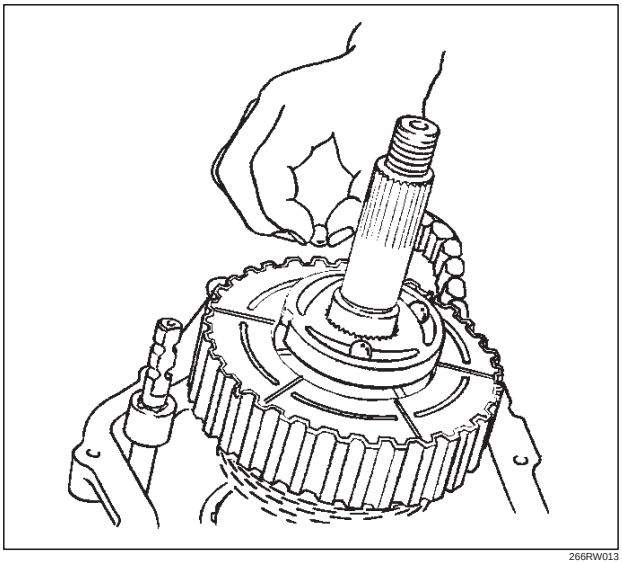

266RW013

Downloaded from www.Manualslib.com manuals search engine

4. Remove cam pulley.
5. Remove wave spring.
6. Using snap ring pliers, remove the snap ring.

NOTE: Pay attention not to damage the snap ring.

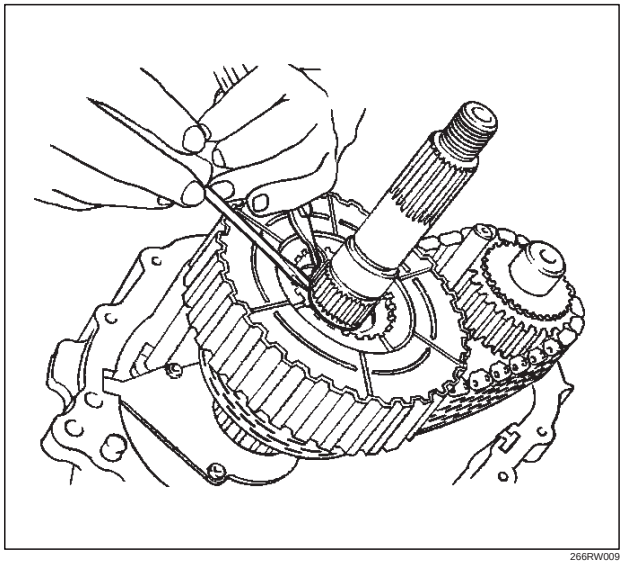

266RW009

7. Remove the armature plate.
8. Remove the insulator washer.
9. Remove the clutch pack assembly as a package.

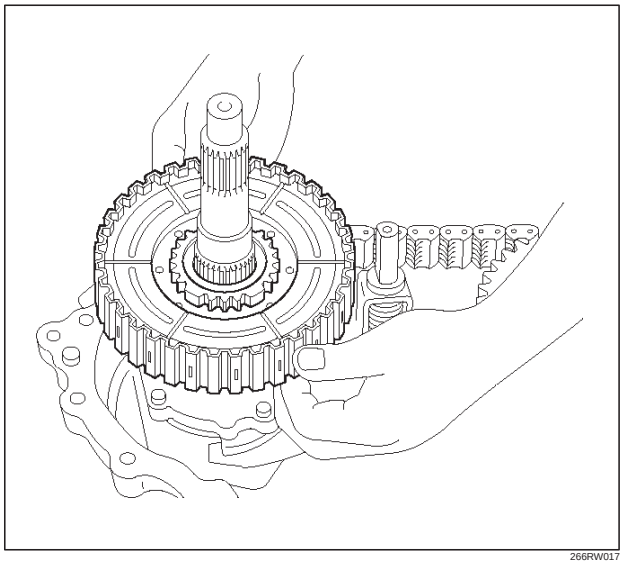

266RW017

Downloaded from www.Manualslib.com manuals search engine

Sprocket and Mechanical Lock

Disassembled View

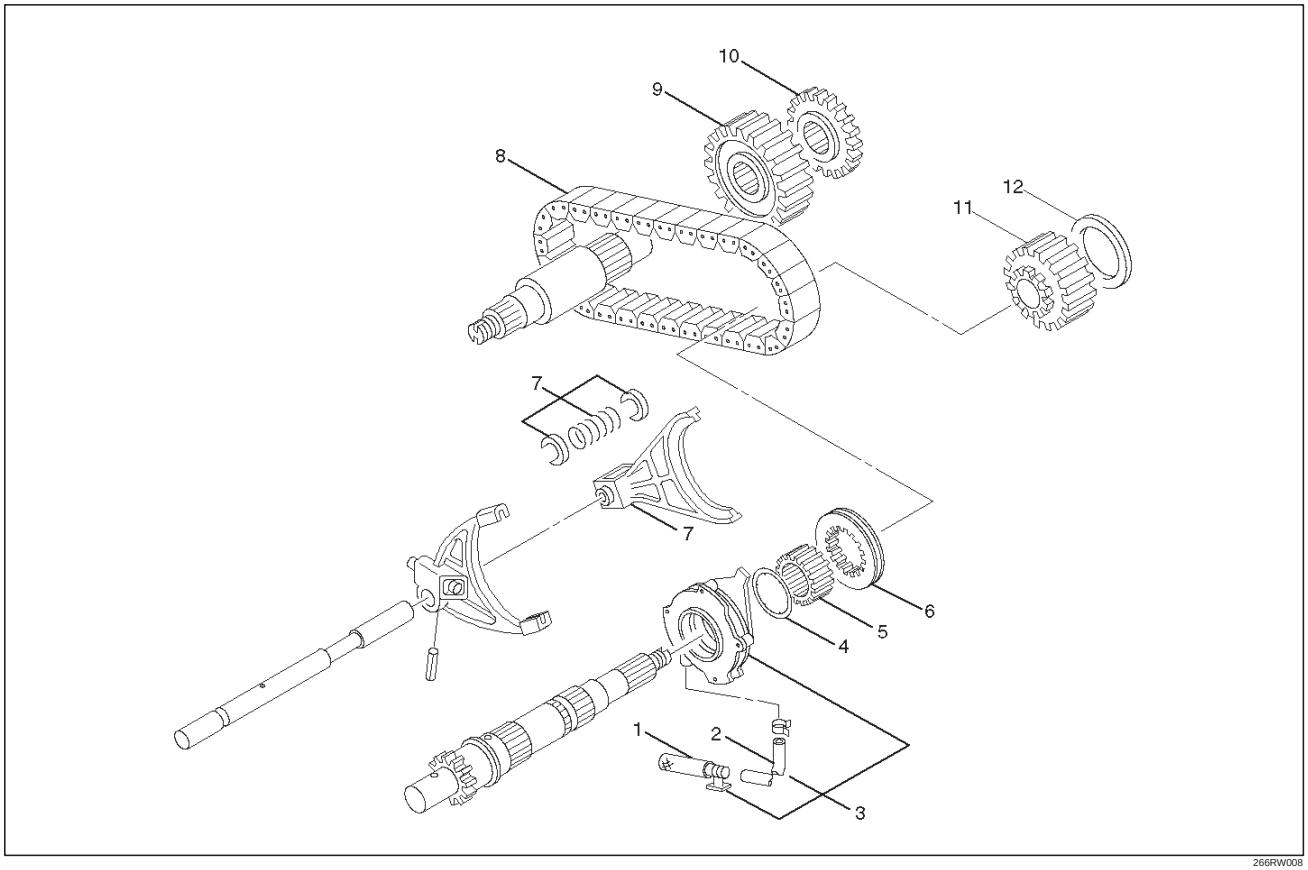

266RW008

Legend

(1) Strainer
(2) Hose
(3) Oil Pump Assembly
(4) Thrust Washer
(5) Mechanical Lock Hub
(6) Lock-up Sleeve
(7) Lock-up Fork
(8) Chain
(9) Lower Drive Sprocket
(10) Front Tone Wheel
(11) Drive Sprocket
(12) Sprocket Spacer

Disassembly

1. Remove sprocket spacer.
2. Remove front tone wheel.
3. Remove drive sprocket.
4. Remove lower drive sprocket.

Downloaded from www.Manualslib.com manuals search engine

5. Remove the drive sprocket, lower drive sprocket, and chain together from the front and rear output shafts.

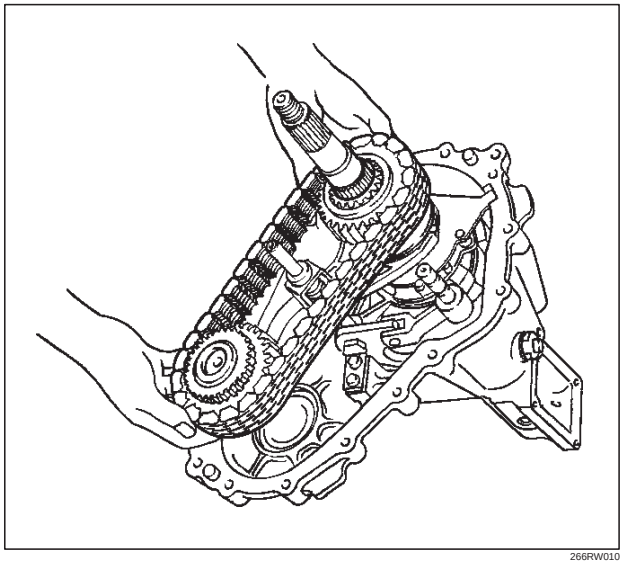

266RW010

6. Remove mechanical lock hub.
7. Remove lock-up fork.
8. Remove the spring retainer from the connection between rail shaft and lock-up fork.
9. Remove lock-up sleeve.

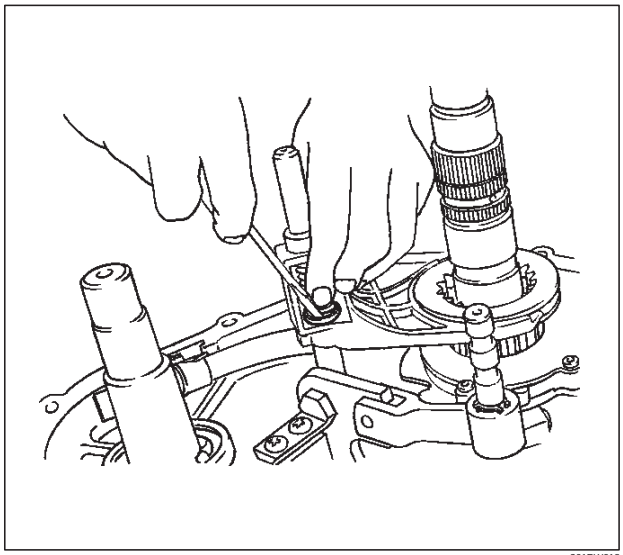

261RW018

10. Remove thrust washer.
11. Remove the magnet from the strainer set position together with the oil pump assembly.
12. Remove the strainer from the oil pump assembly.
13. Remove the hose from the oil pump assembly.

Downloaded from www.Manualslib.com manuals search engine

Output Shafts and Shift Control Shaft

Disassembled View

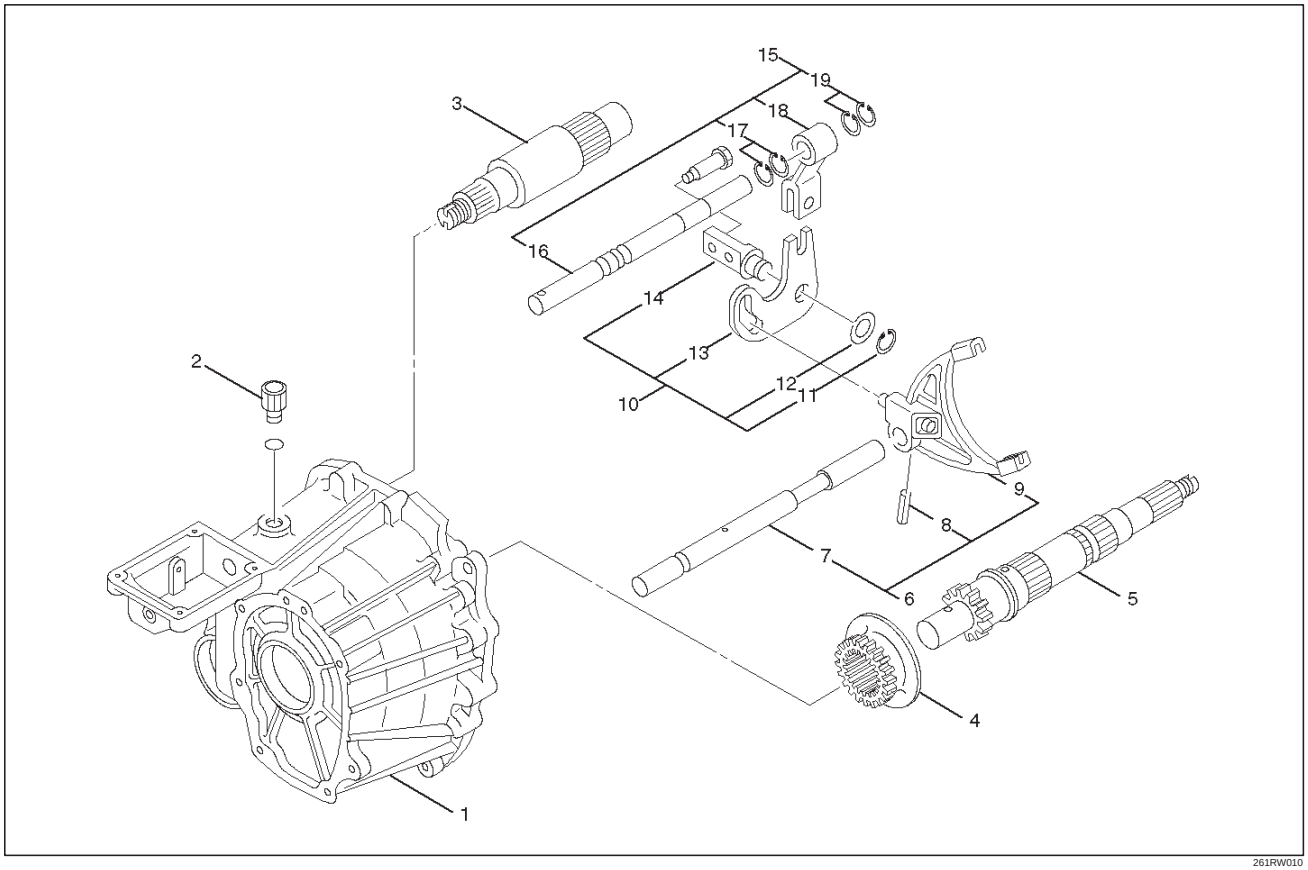

261RW010

Legend

(1) Transfer Case Assembly
(2) Detent Spring
(3) Front Output Shaft
(4) Reduction Hub
(5) Output Shaft
(6) Lock-up Roll Assembly
(7) Spring Pin
(8) Spring Pin
(9) Reduction Fork
(10) Cam Assembly
(11) Snap Ring
(12) Washer
(13) Cam
(14) Cam Pilot Block
(15) Shifter Shaft Assembly
(16) Shifter Lever Shaft
(17) Snap Ring
(18) Reduction Lever Assembly
(19) Snap Ring

Downloaded from www.Manualslib.com manuals search engine

Disassembly

1. Remove output shaft.

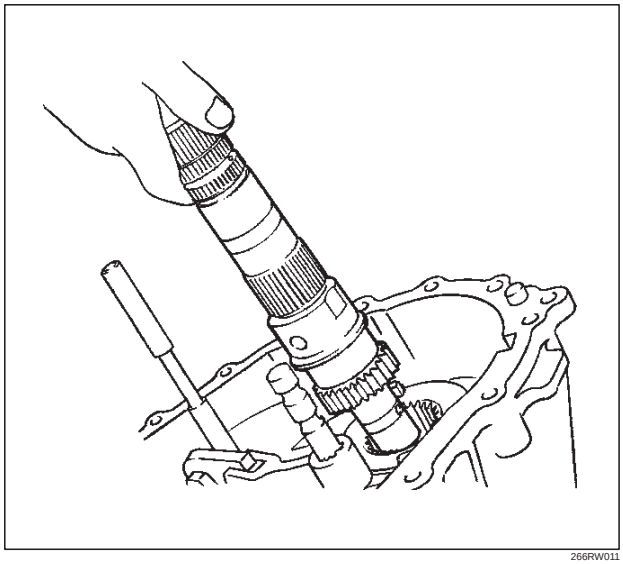

266RW011

2. Remove detent spring.
3. Remove the cam pilot block set bolts.
4. Remove the cam pilot block assembly and cam assembly.
5. Remove the spring pin that fixes the reduction hub together.

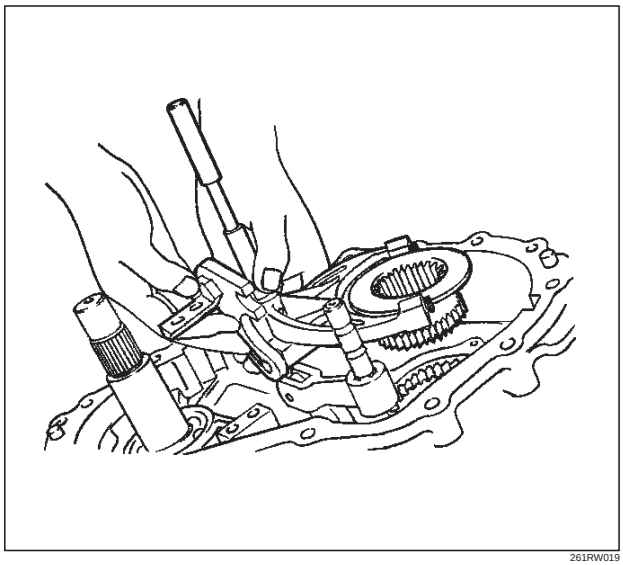

261RW019

6. Remove the spring pin that fixes the reduction fork.

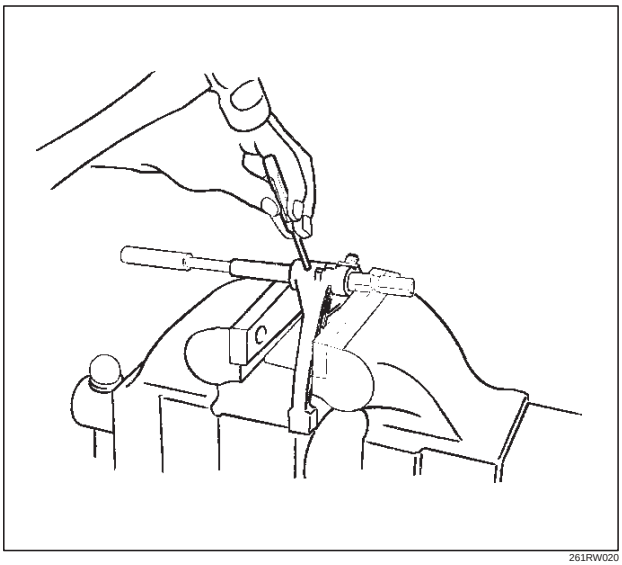

261RW020

7. Remove the reduction fork.
8. Remove the lock-up roll.
9. Using snap ring pliers, remove the snap ring.

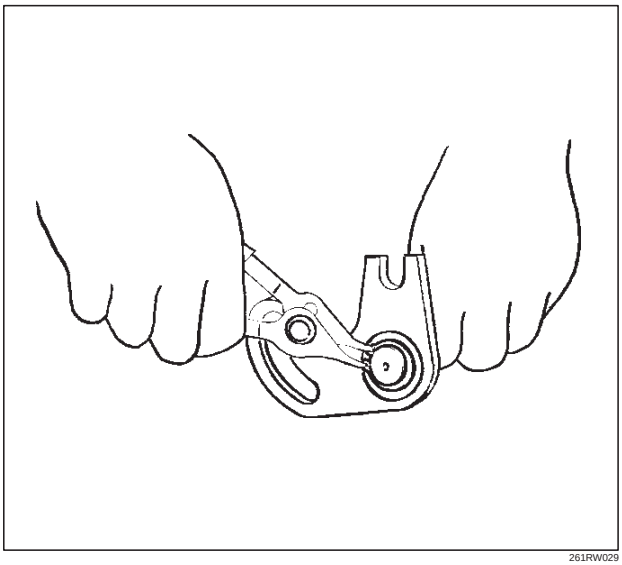

261RW029

10. Remove the washer.
11. Remove the cam.
12. Remove the cam pilot block.

Downloaded from www.Manualslib.com manuals search engine

13. Using snap ring pliers, attach the snap ring.

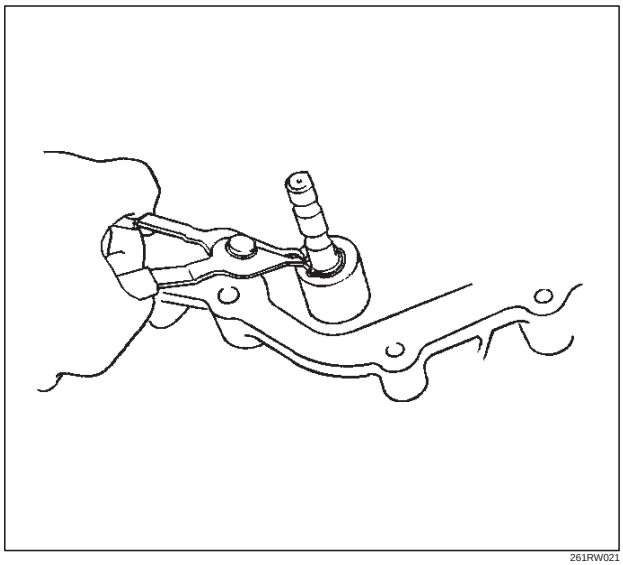

261RW021

14. Remove the reduction lever assembly.
15. Remove the snap ring.
16. Remove the shifter lever shaft.
17. Remove the front output shaft.

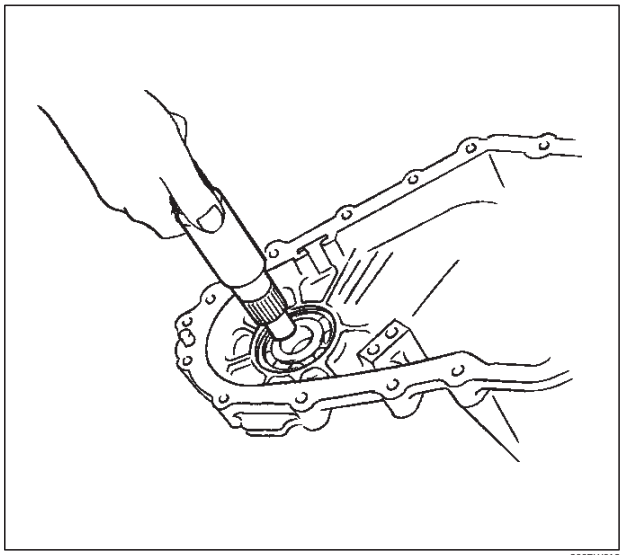

266RW012

18. Remove transfer case assembly.

Downloaded from www.Manualslib.com manuals search engine

Transfer Case

Disassembled View

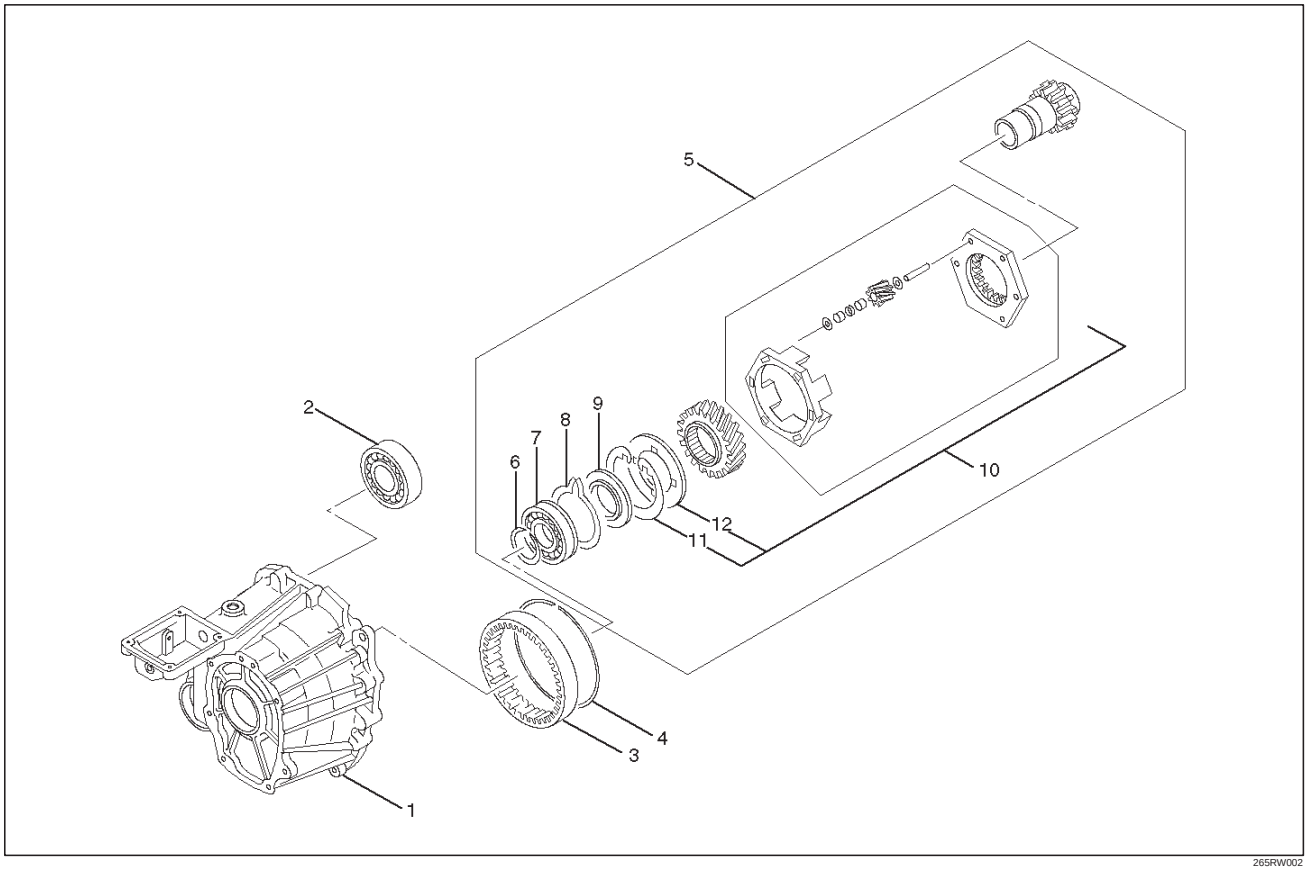

265RW002

Legend

(1) Transfer Case
(2) Ball Bearing
(3) Ring Gear
(4) Snap Ring
(5) Input Shaft and Carrier Assembly
(6) Snap Ring
(7) Ball Bearing
(8) Spring Ring
(9) Thrust Plate
(10) Carrier Assembly
(11) Snap Ring
(12) Circular Hub

Downloaded from www.Manualslib.com manuals search engine

Disassembly

1. Remove ball bearing (for front output shaft).
2. Open the snap ring from the gap on the carrier assembly.

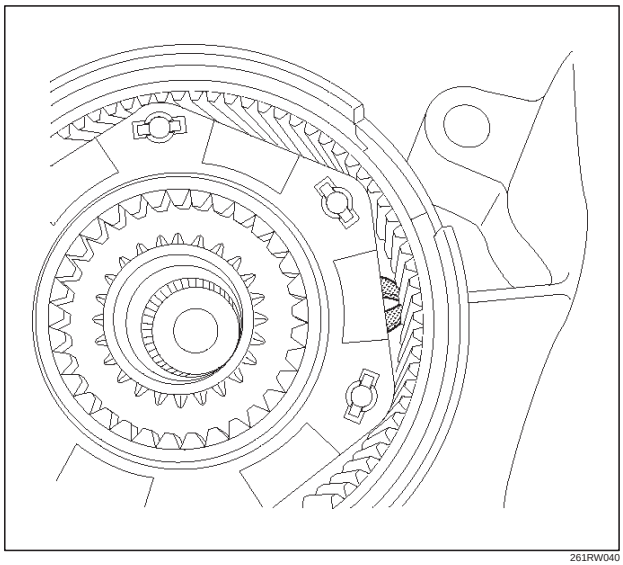

261RW040

3. While opening the snap ring, remove the input shaft, ball bearing, carrier assembly, and thrust plate from the transfer case.

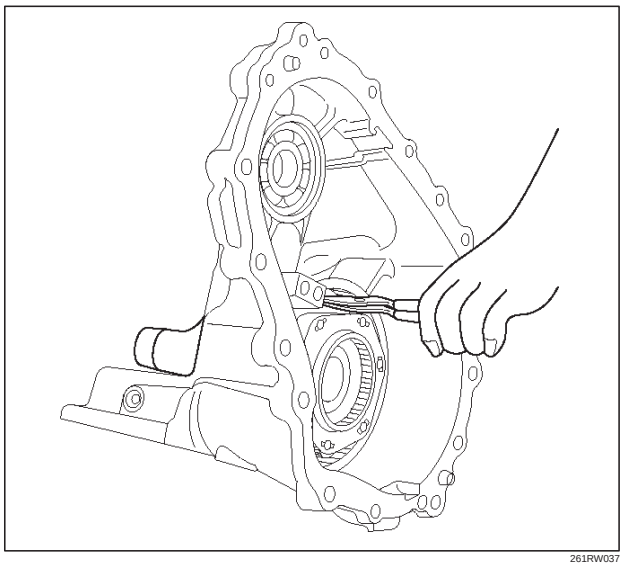

261RW037

4. Remove the snap ring from the transfer case.

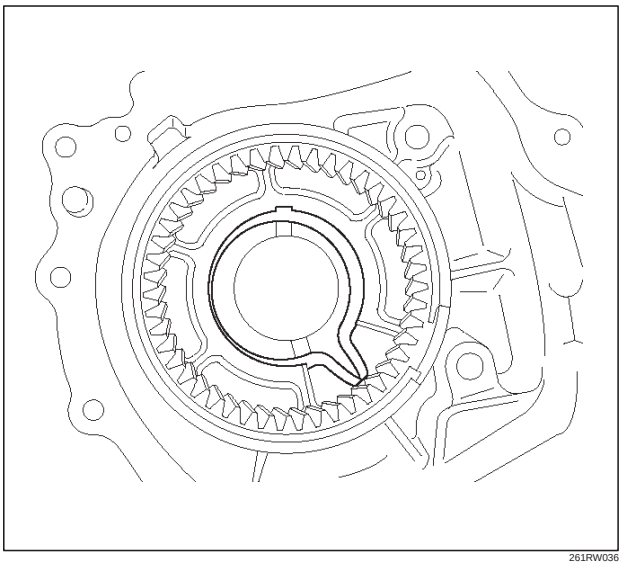

261RW036

5. Using snap ring pliers, remove the snap ring before the ball bearing.

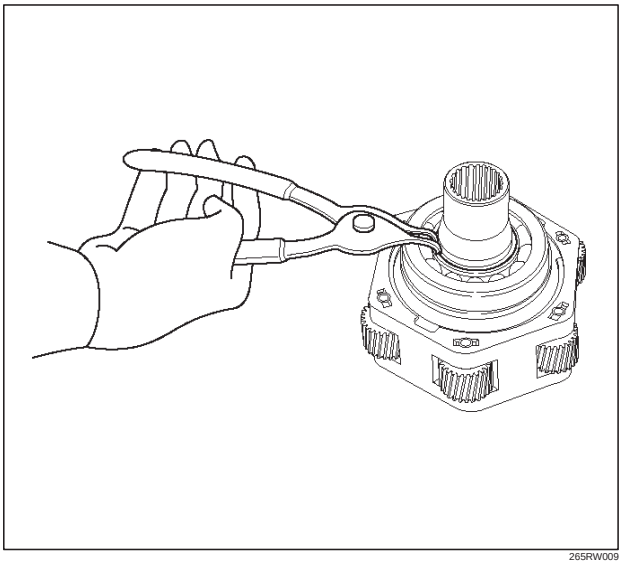

265RW009

Downloaded from www.Manualslib.com manuals search engine

6. Using the bearing remover J-22912-01, remove the ball bearing from the input shaft.

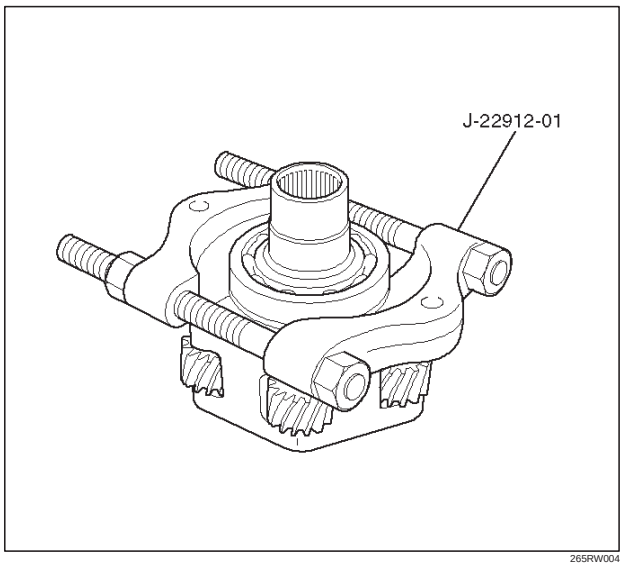

265RW004

7. Remove the thrust plate.
8. Remove the carrier assembly.
9. Remove the snap ring from the carrier assembly.

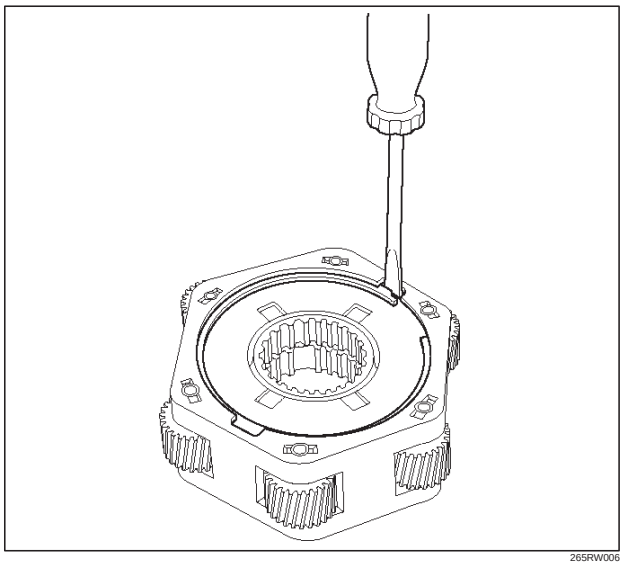

265RW006

10. Remove the circular hub.
11. Remove the snap ring before the ring gear.

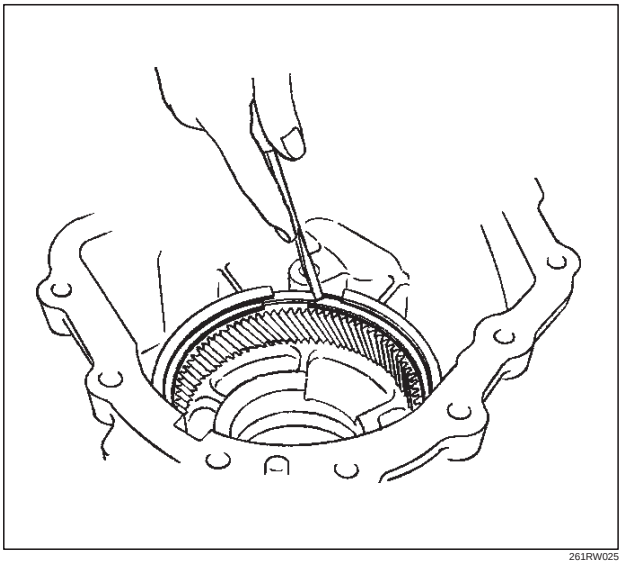

261RW025

12. Using the special tool J-42806, remove the ring gear.

NOTE: Removing the ring gear needs a high-load press. This means the transfer case may be damaged. To remove and replace the ring gear, it is recommended that the transfer case assembly should be replaced.

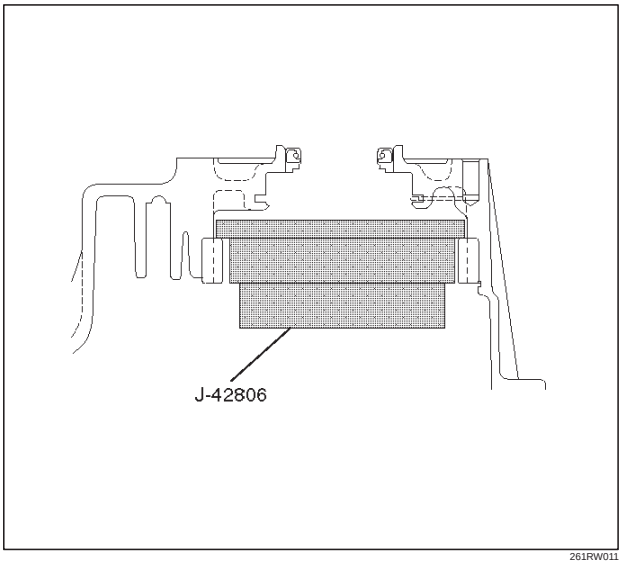

261RW011

Downloaded from www.Manualslib.com manuals search engine

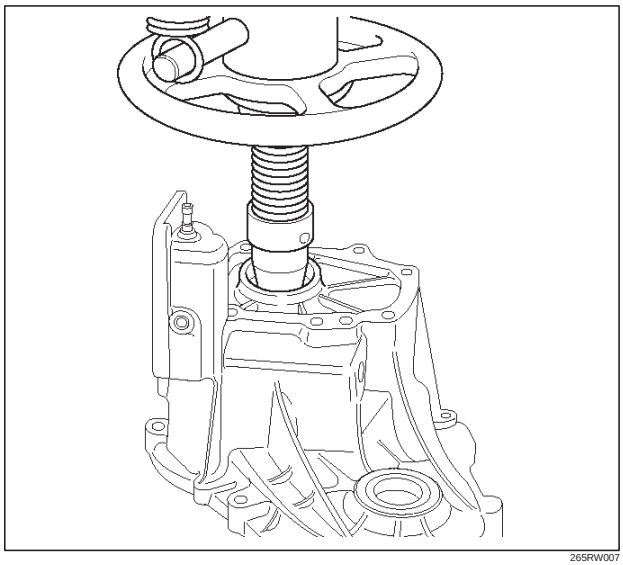

265RW007

Inspection and Repair

When wear, damage, or any other defects are observed during the inspection, the part or parts must be repaired or replaced. Wash all the parts with clean detergent, and check that old oil, metallic particles, dirt, or foreign materials are completely removed. Blow the air into oil holes and grooves to remove foreign materials or residual detergent.

Chain

- Check whether the face that contacts the sprocket is free from excessive wear or damage. If defects are observed, replace the part.
- If the chain interference mark is found on the inside wall of the transfer cover or the chain is so slack that a skipped engagement occurs between the chain and sprocket, replace the chain.

Sprocket

- Check whether the sprocket tooth surface is excessively worn or damaged, and there is evidence of burrs, chipping, wear, or damage on the gear spline. Remove minor flaws or scratches with oil stone. If excessive wear or damage is observed, replace the part.
- If excessive wear or damage is observed on the sprocket inside sliding surface, replace the part.

Gear

Check whether the gear tooth surface is excessively worn or damaged, and there is evidence of burrs, chipping, wear, or damage on the gear spline. Remove minor flaws or scratches with oil stone. If excessive wear or damage is observed, replace the part.

Thickness of Reduction Hub

- Measure the thickness with a micrometer.
- If the measurement exceeds the limit, replace the reduction hub.

  Standard : 3.05-3.30 mm (0.120-0.130 in)

  Allowable limit : 2.5 mm (0.098 in)

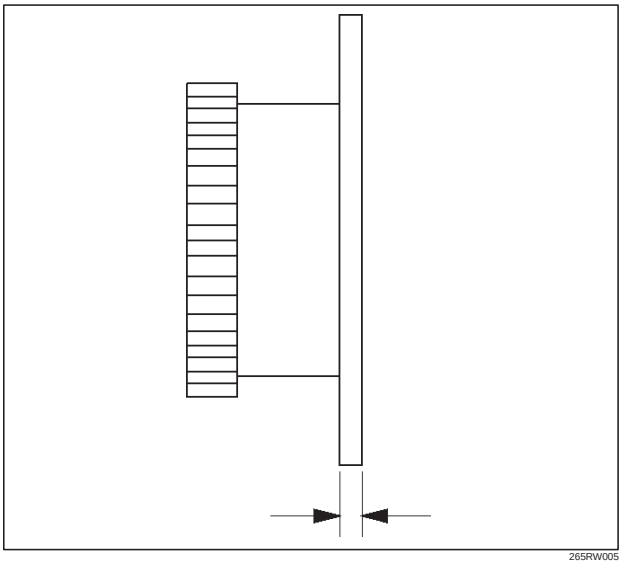

265RW005

Lock-up Sleeve

Mount the lock-up hub, drive sprocket assembly, and lock-up sleeve to the output shaft.

If the lock-up sleeve does not move smoothly, replace the sleeve.

NOTE: Apply ATF to the area engaging the gear.

Thickness of Lock-up Sleeve

- If the measurement exceeds the limit, replace the lock-up sleeve.

  Standard : 7.16-7.32 mm (0.282-0.288 in)

  Allowable limit : 7.9 mm (0.311 in)

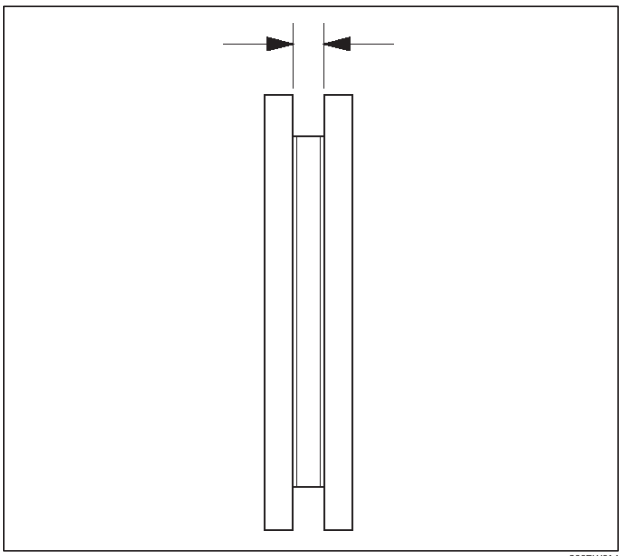

266RW014

Downloaded from www.Manualslib.com manuals search engine

Reduction Fork

Check the reduction fork and shaft for wear, distortion, and scratches. If defects are observed, replace the parts.

Thickness of Reduction Fork

- If the measurement exceeds the limit, replace the reduction fork.

  Standard : 3.41-3.79 mm (0.134-0.149 in)

  Allowable limit : 4.4 mm (0.173 in)

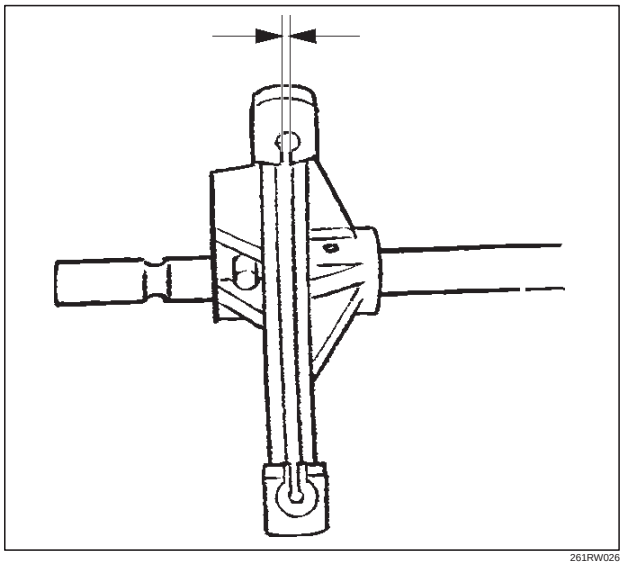

261RW026

Lock-up Fork

- Check the lock-up fork and shaft for wear, distortion, and scratches. If defects are observed, replace the parts.

Thickness Lock-up Fork

If the measurement exceeds the limit, replace the lock-up fork.

Standard : 6.99-7.09 mm (0.275-0.279 in)

Allowable limit : 6.3 mm (0.248 in)

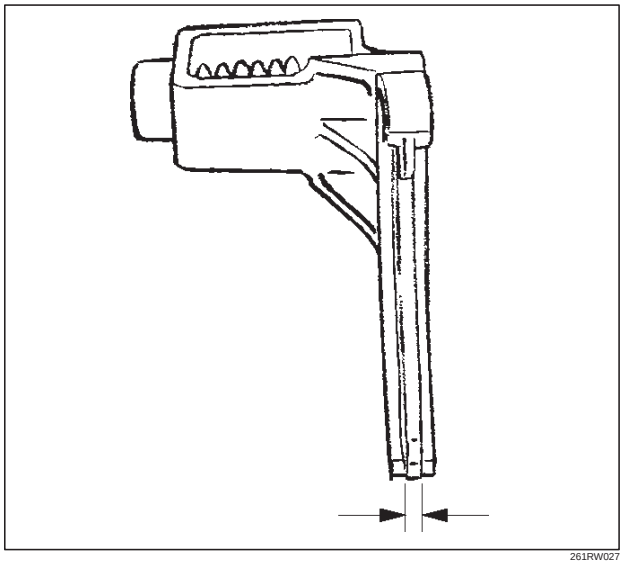

261RW027

Bearing

Check the profile of the needle, roller, ball, and thrust bearings. Wash the bearings with clean detergent completely, and dry with air.

NOTE: If the bearing is rotated excessively, the rollers may be damaged. So, rotate the bearing slowly with your hand. Apply grease to the bearing, and check the smoothness of the bearing while slowly rotating the race with your hand.

Allowable limit : 0.23 mm (0.009 in)

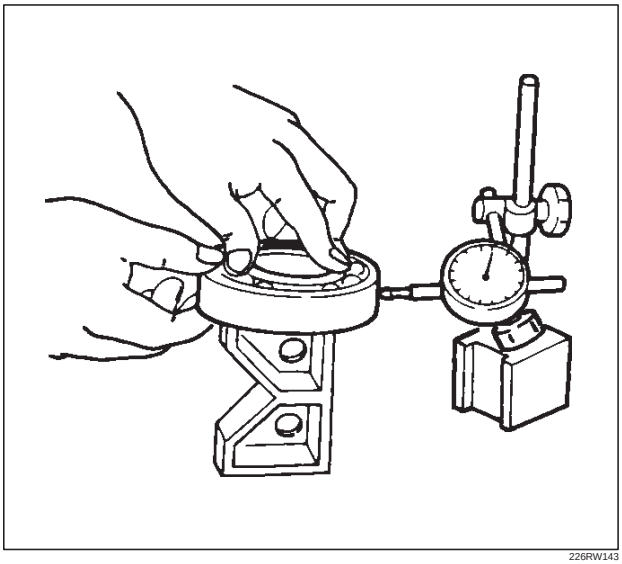

226RW143

Lock-up Fork Spring

Check the lock-up fork spring for distortion, cracking, and wear. If defects are observed, replace the part.

Free Length of the Lock-up Fork Spring

- If the measurement exceeds the limit, replace the spring.

  Standard : 60.96 mm (2.40 in)

  Allowable limit : 55.0 mm (2.17 in)

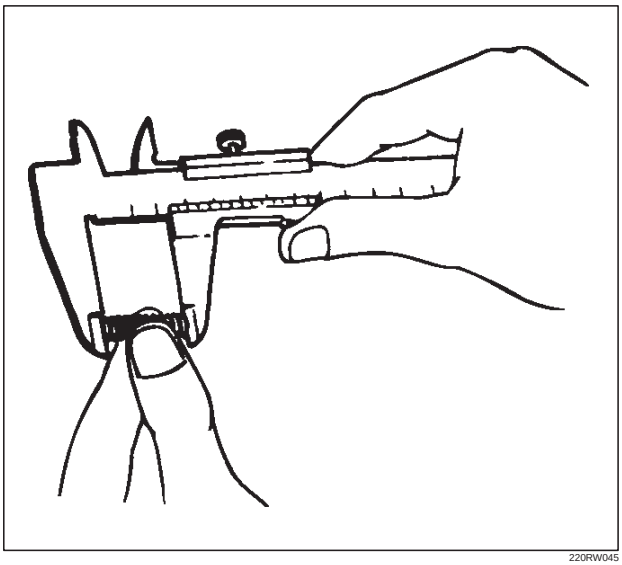

220RW045

Downloaded from www.Manualslib.com manuals search engine

Tension of Lock-up Fork Spring

- If the measurement exceeds the limit, replace the spring. (When compressed to 41.4 mm)

  Standard : 27.1-33.8 N {2.76-3.45 kg}

  Allowable limit : 24.5 N {2.5 kg}

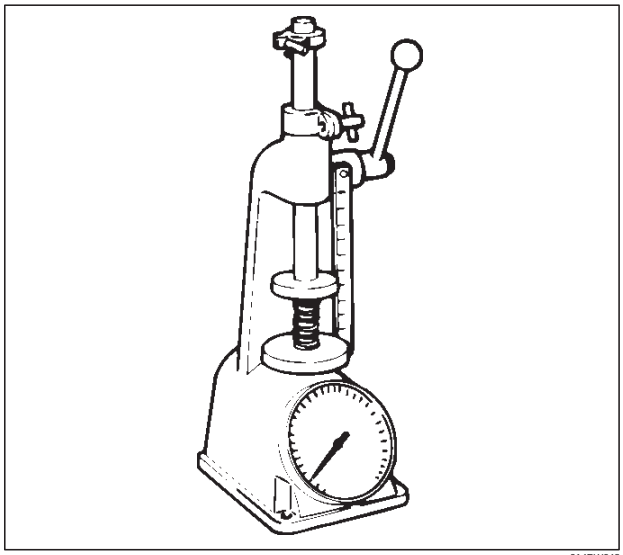

014RW048

Tension of Detent Spring Assembly

- If the measurement exceeds the limit, replace the spring. N {kg} (When compressed by 3 mm from the free length)

  Standard : 139 N -203 {14.2-20.7 kg}

  Allowable limit : 130 N {13.3 kg}

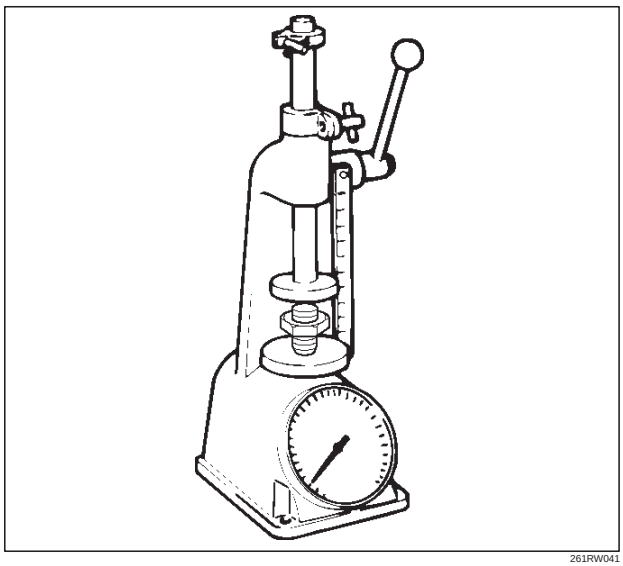

261RW041

Oil Pump

- Remove foreign materials from the strainer. If the strainer is damaged, replace it.
- If the area into which the shaft is inserted is excessively worn or damaged, replace the pump.

Multi Plate Disk Clutch

- If the burned, mirror-surfaced clutch facing, or scraping is observed on the clutch plates, clutch housing, armature plate, and insulator washer, replace the part or parts.

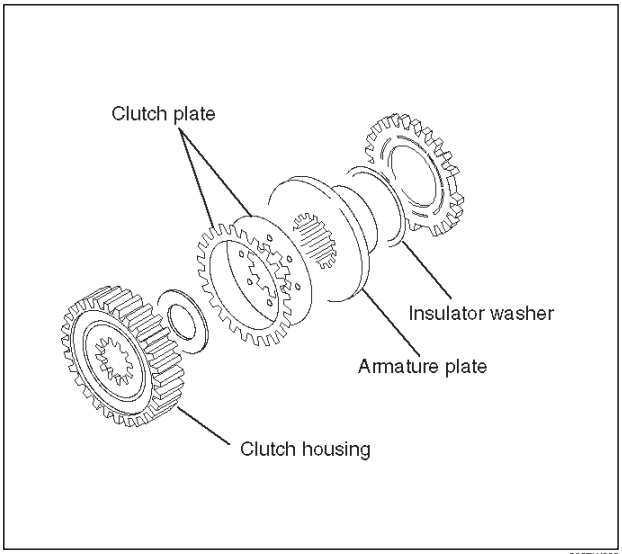

266RW003

Coil Assembly

- Check the resistance of the coil with a tester. If defects are observed, replace the assembly.
  * (ordinary temperature)

  Standard : 1.4~2.0 Ω

  Allowable limit : 1.0~5.0 Ω

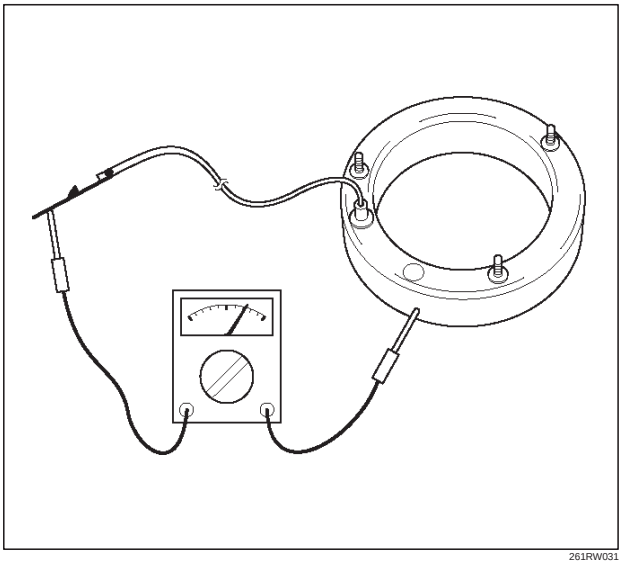

261RW031

Downloaded from www.Manualslib.com manuals search engine

Cam Pulley, Cam Ball, and Cam&Coil Housing

- Check the cam balls and cam for excessive wear or damage. If defective, replace the parts. 4H and 4L switches.

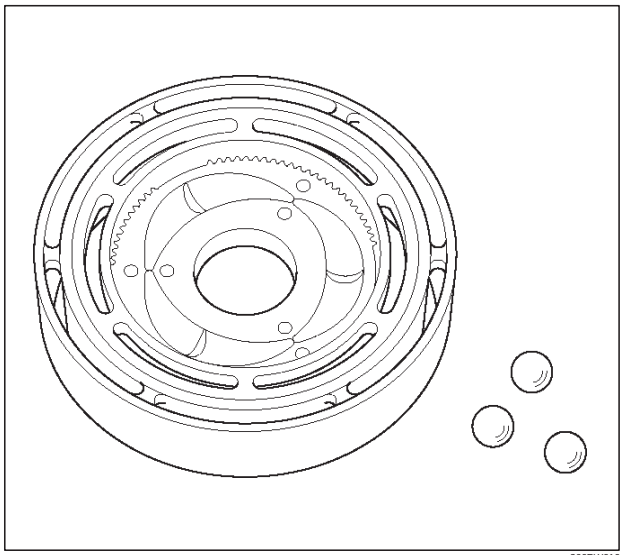

266RW016

The Parts 4H and 4L Switch

- Check the continuity of 4H and 4L switch.

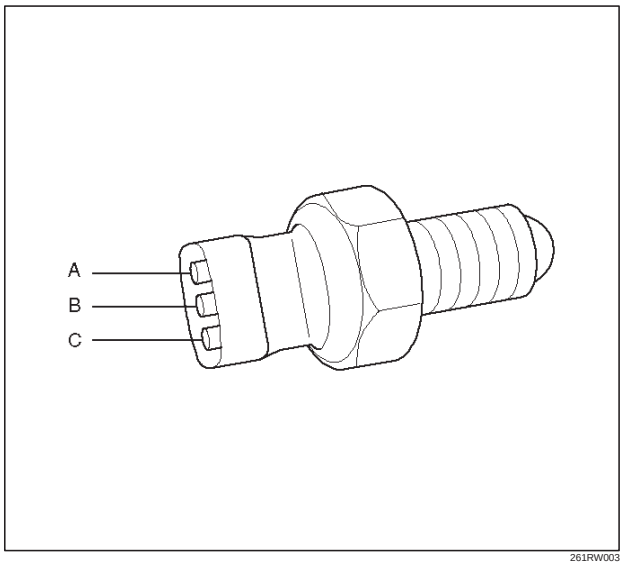

261RW003

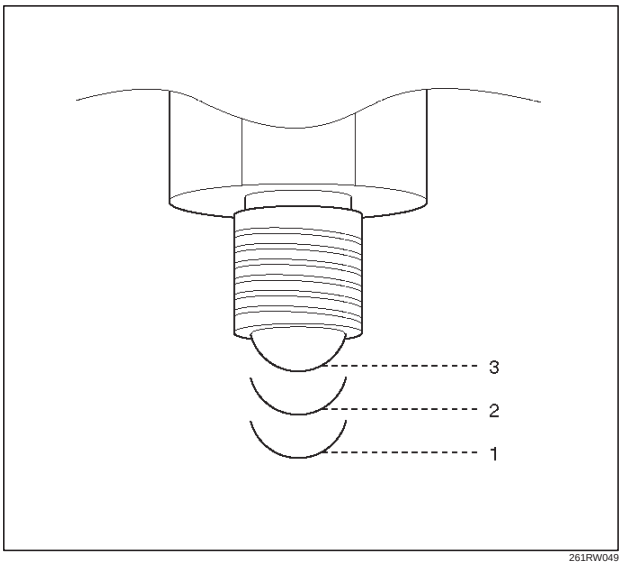

261RW049

Switch Stroke	4H Switch Signal	4L Switch Signal	The corresponding position of transfer lever
	B to Switch Body	A to C	
1	Open	Open	High
2	Open	Close	4L
3	Close	Close	Neutral

Downloaded from www.Manualslib.com manuals search engine

Transfer Case

Disassembled View

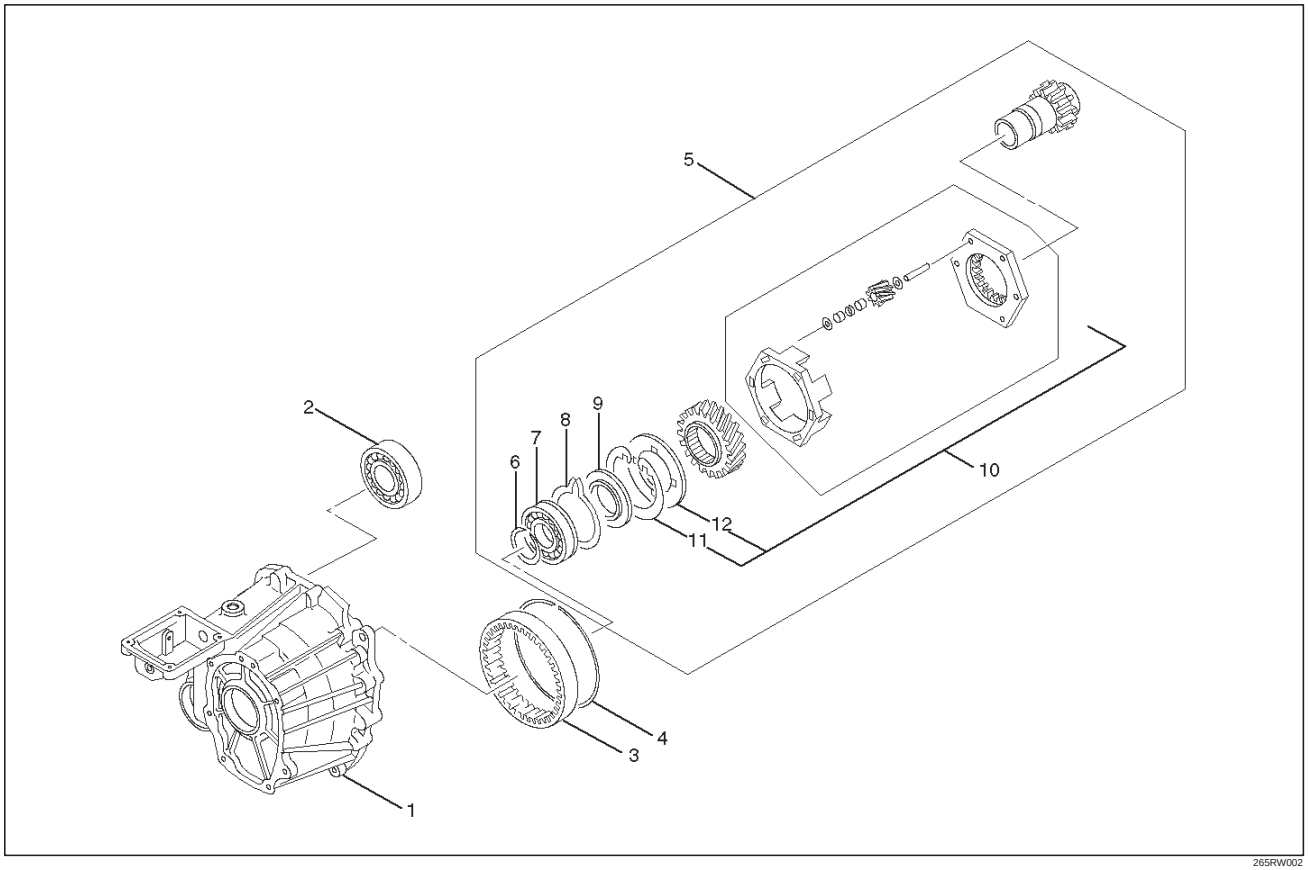

265RW002

Legend

(1) Transfer Case
(2) Ball Bearing
(3) Ring Gear
(4) Snap Ring
(5) Input Shaft and Carrier Assembly
(6) Snap Ring
(7) Ball Bearing
(8) Spring Ring
(9) Thrust Plate
(10) Carrier Assembly
(11) Snap Ring
(12) Circular Hub

Reassembly

1. Remove the oil seal from the transfer case.
2. Apply the circumference of the new oil seal and fill the lip with grease (Besco L2 or equivalent).

Downloaded from www.Manualslib.com manuals search engine

3. Using the front output shaft oil seal installer J-42807, attach the oil seal to the transfer case.

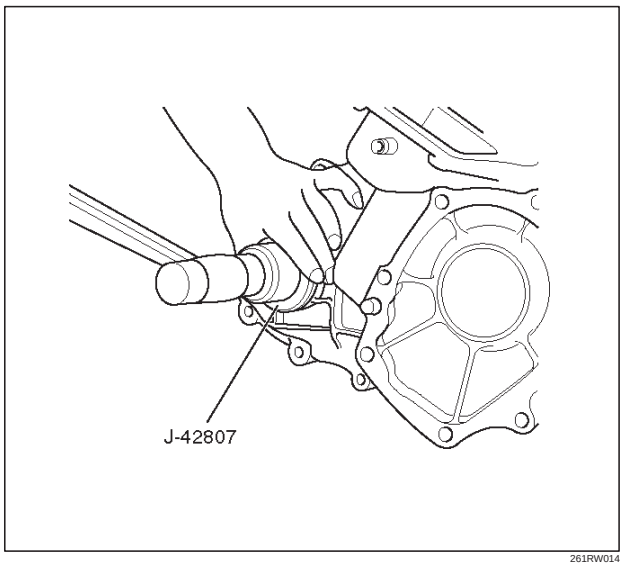

261RW014

4. Using the input shaft (main) J-42808 oil seal installer, attach the oil seal to the transfer case.

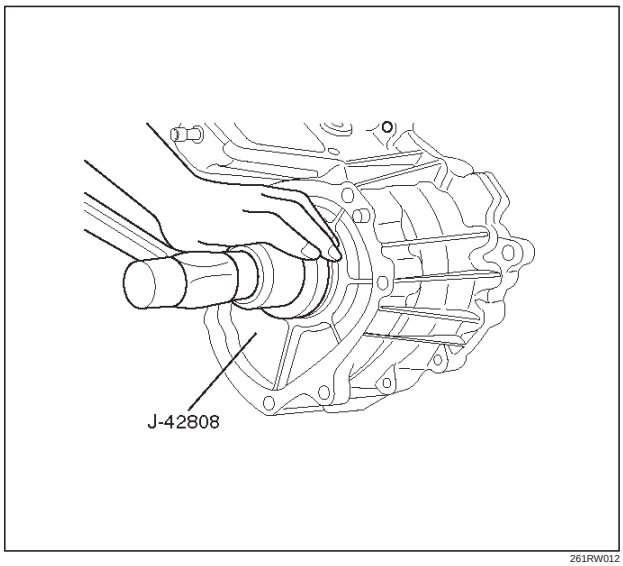

261RW012

5. Using the special tool J-42809, press-fit the ring gear.

Pay attention to the following points.

- Identify the correct direction of gear.
- Do not damage the gear.
- Do not press-fit the ring gear slantingly.
- Press-fit the ring gear to the innermost.
- Remove burrs generated by press-fitting.
- If the transfer case has serrations, match them with those of the gear and press-fit the gear.

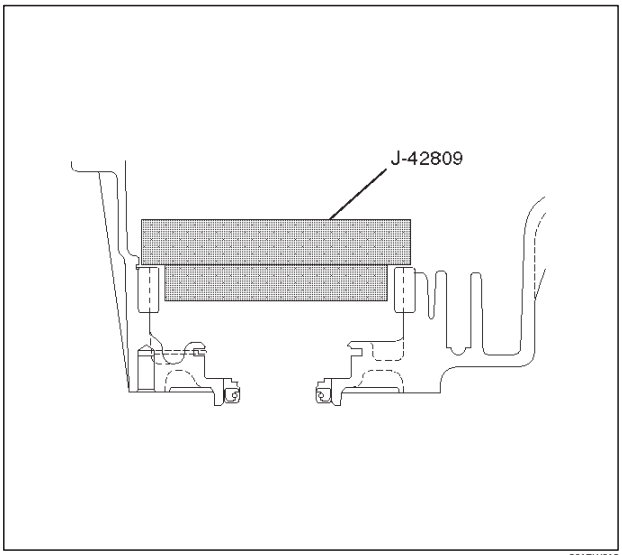

261RW013

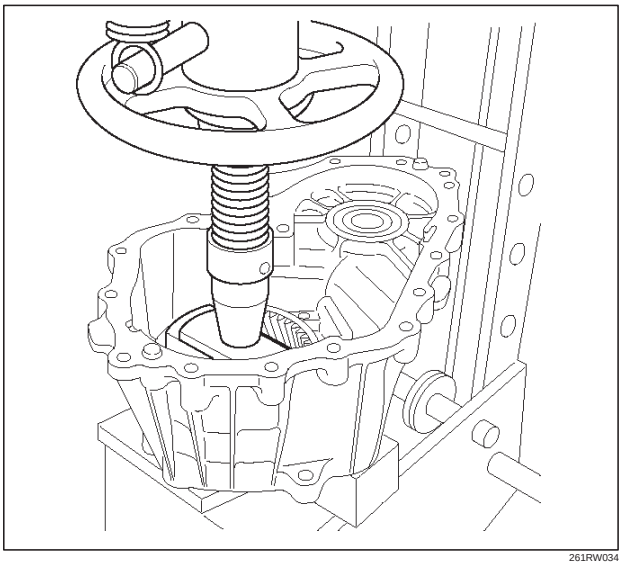

261RW034

6. Install snap ring.
7. Install circular hub.
8. Attach the snap ring to the carrier.

Downloaded from www.Manualslib.com manuals search engine

9. Mount the carrier assembly to the transfer case.
10. Check the direction of thrust plate and mount it to the input shaft.

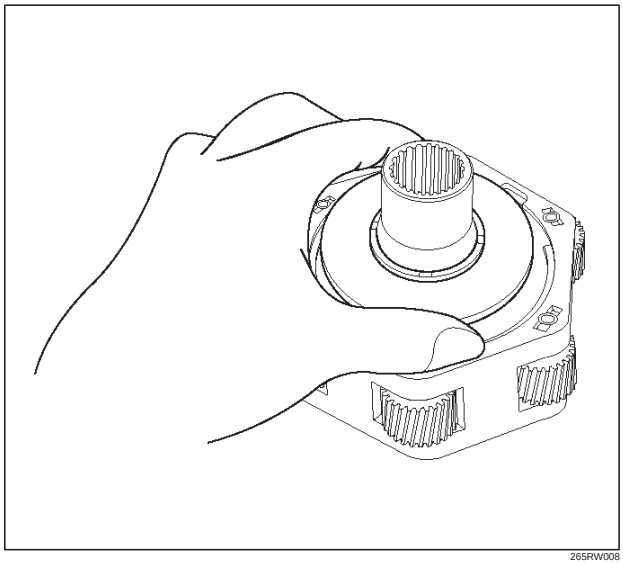

265RW008

11. Mount the ball bearing to the input shaft so that the snap ring will be attached to the input shaft.

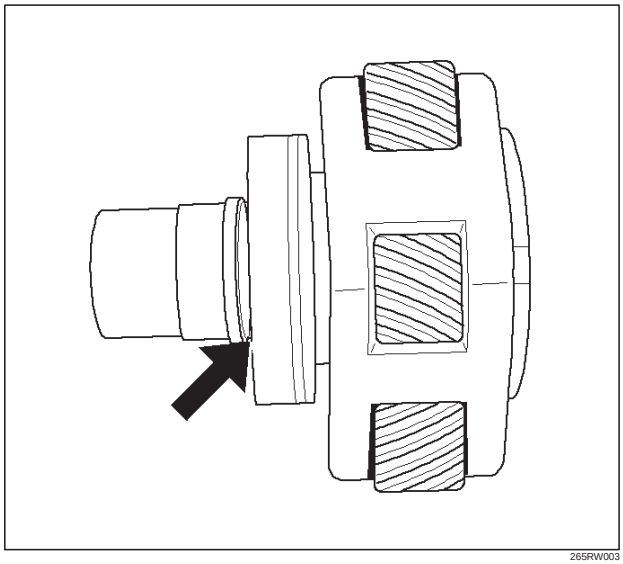

265RW003

12. Attach the snap ring to the input shaft.
13. Attach the snap ring to the transfer case.
14. Using the snap ring pliers, open the snap ring from the gap on the input shaft and carrier assembly and securely attach the part.

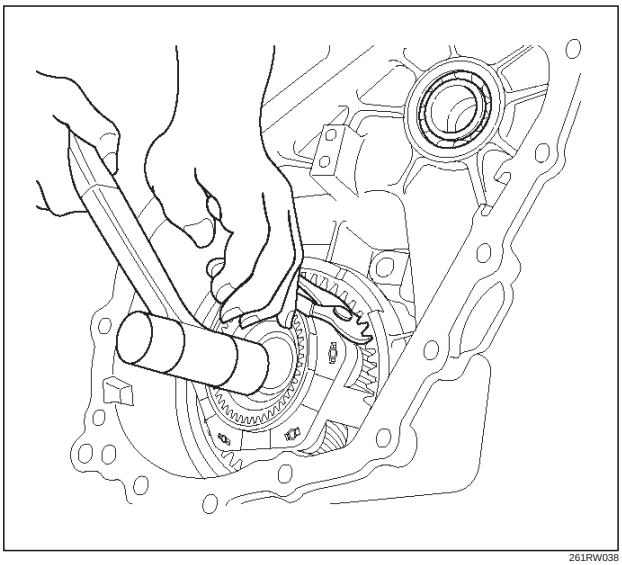

261RW038

15. Install ball bearing (for front output shaft)

Downloaded from www.Manualslib.com manuals search engine

Output Shafts and Shift Control Shaft

Disassembled View

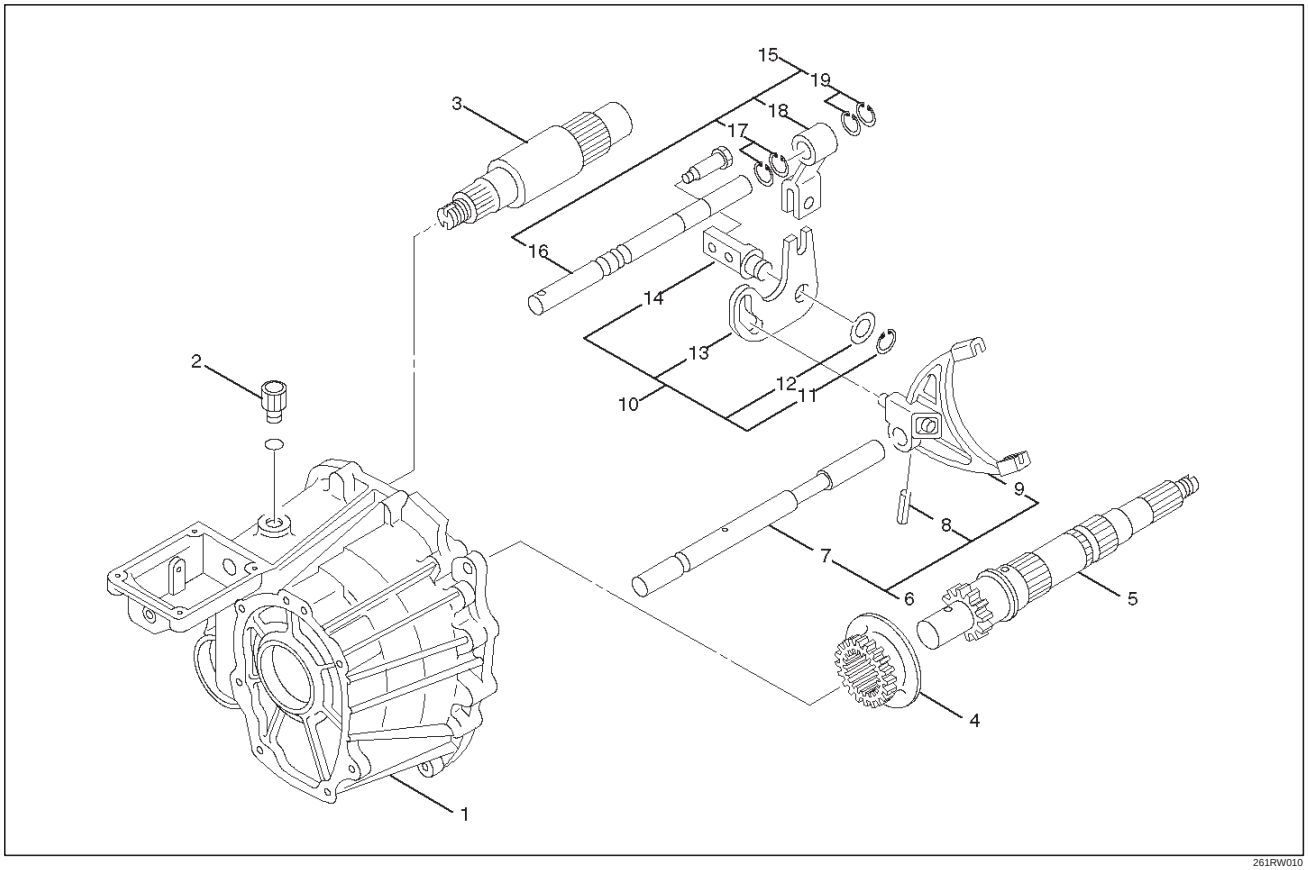

261RW010

Legend

(1) Transfer Case Assembly
(2) Detent Spring
(3) Front Output Shaft
(4) Reduction Hub
(5) Output Shaft
(6) Lock-up Roll Assembly
(7) Spring Pin
(8) Spring Pin
(9) Reduction Fork
(10) Cam Assembly
(11) Snap Ring
(12) Washer
(13) Cam
(14) Cam Pilot Block
(15) Shifter Shaft Assembly
(16) Shifter Lever Shaft
(17) Snap Ring
(18) Reduction Lever Assembly
(19) Snap Ring

Reassembly

1. Apply ATF to the inside of the ball bearing.

Downloaded from www.Manualslib.com manuals search engine

2. Mount the front output shaft to the transfer case.

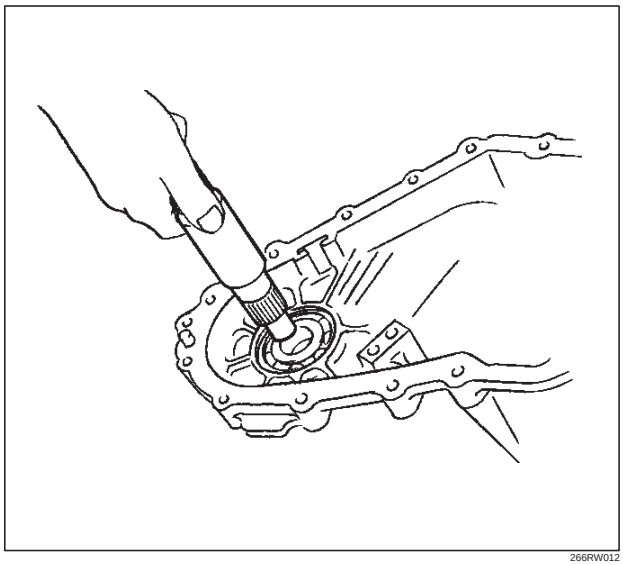

266RW012

3. Mount the reduction lever assembly to the shifter lever shaft and fix the assembly with the snap ring.

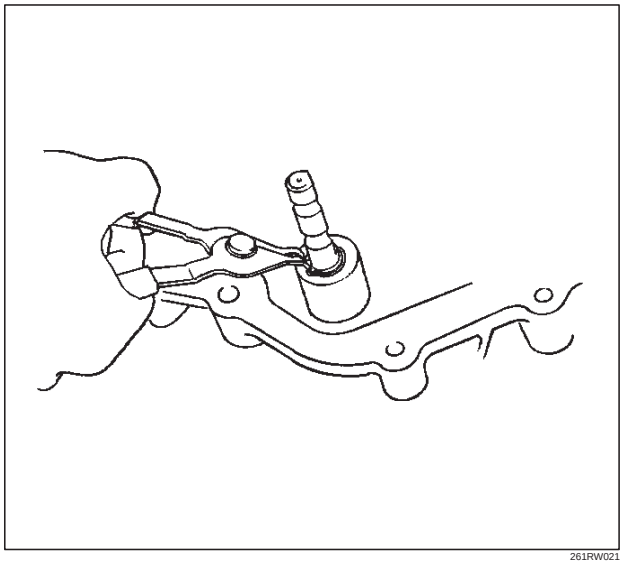

261RW021

4. Mount the cam to the cam pilot.
5. Attach the washer to the cam pilot block and fix the washer with the snap ring.

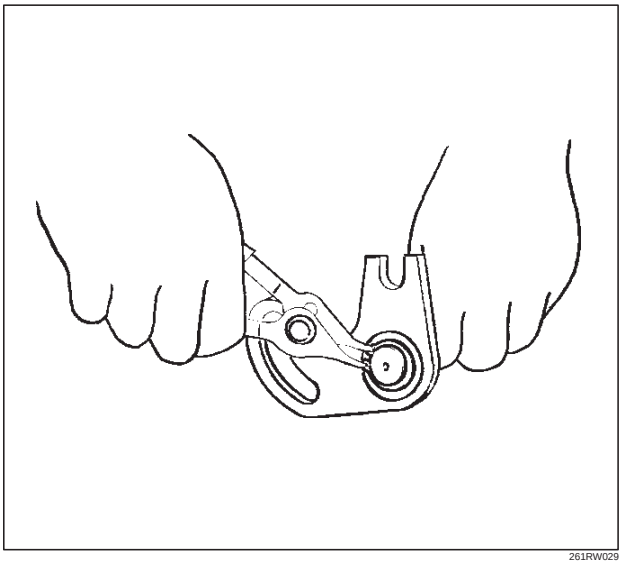

261RW029

6. Mount the reduction fork to the lock-up roll.
7. Attach the spring pin to fix to the reduction fork.

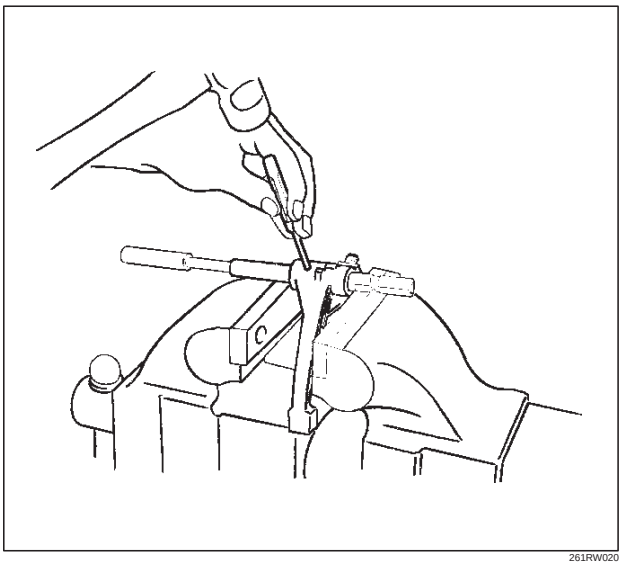

261RW020

Downloaded from www.Manualslib.com manuals search engine

8. Mount the lock-up assembly and reduction hub to together to transfer case assembly.
9. Mount the shifter shaft assembly.

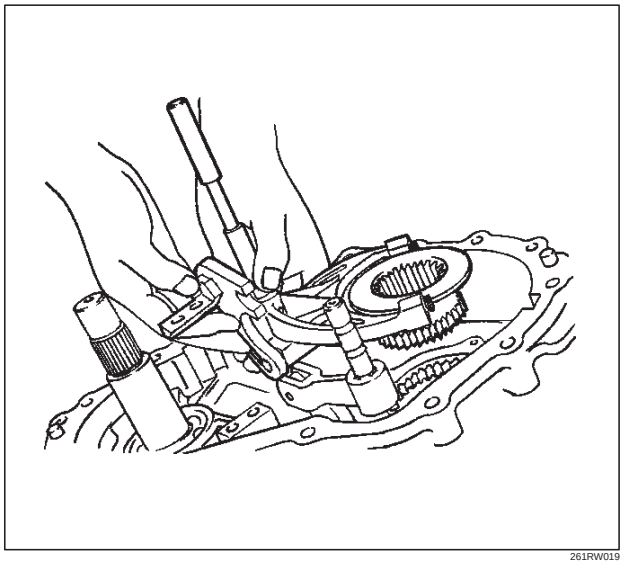

261RW019

10. Tighten the cam pilot block set bolts to the specified torque.

    Torque : 12 N·m (104 lb in)

11. Tighten the detent spring to the specified torque.

    Torque : 16 N·m (12 lb ft)

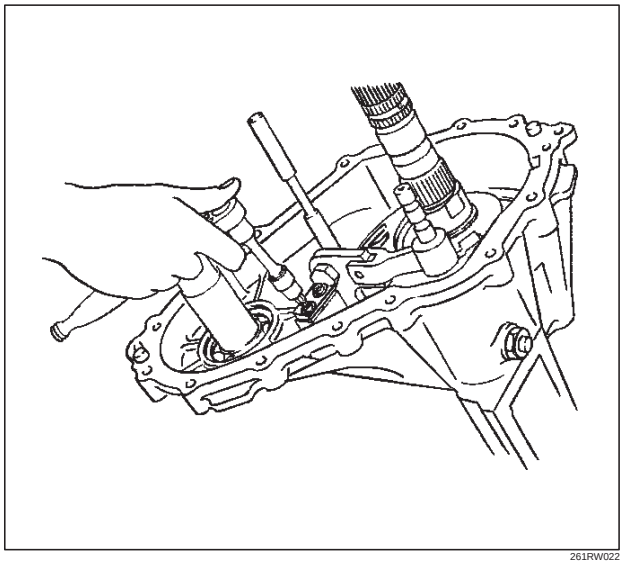

261RW022

12. Apply ATF to the needle bearing inside the output shaft assembly.
13. Mount the output shaft to the transfer case.

Downloaded from www.Manualslib.com manuals search engine

Sprocket and Mechanical Lock

Disassembled View

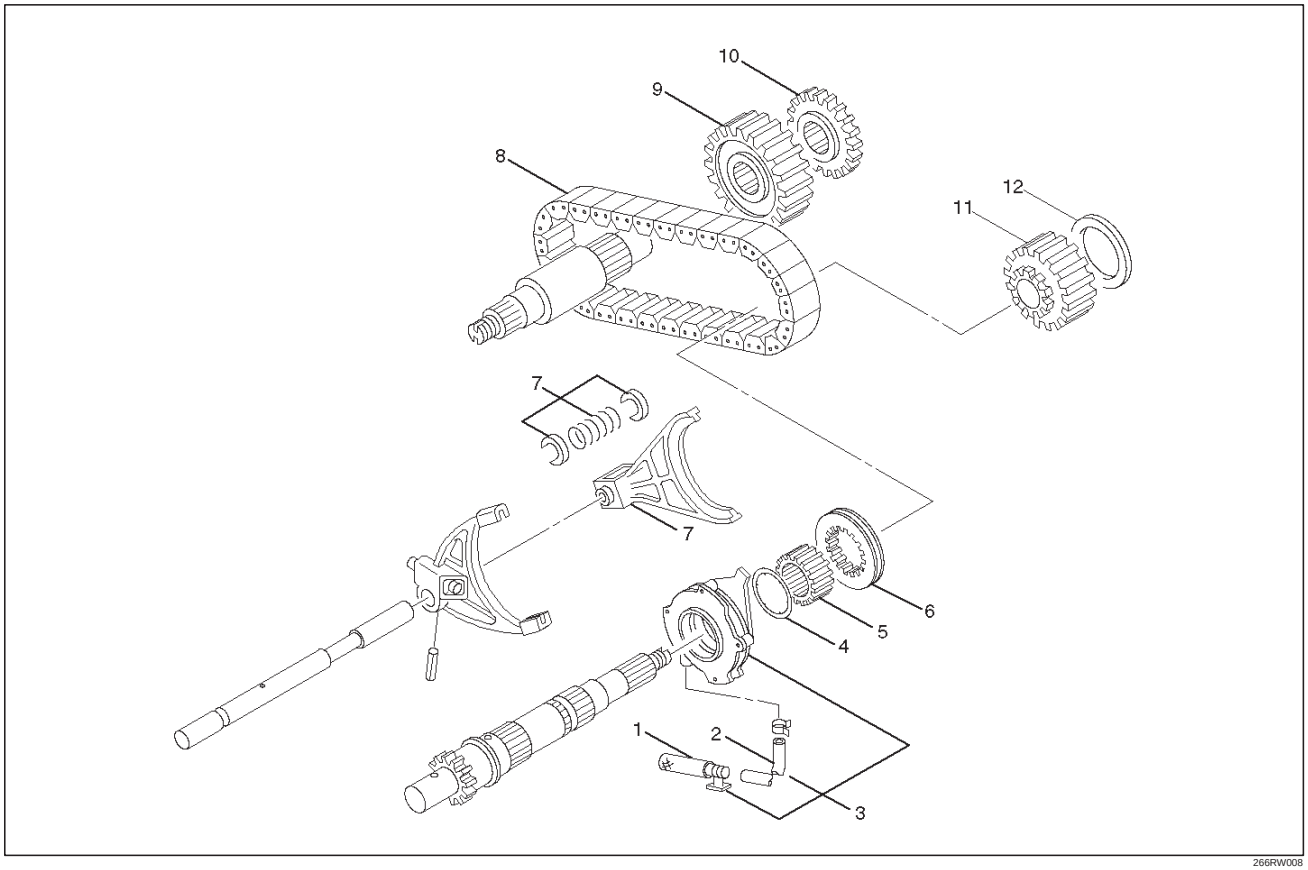

266RW008

Legend

(1) Strainer
(2) Hose
(3) Oil Pump Assembly
(4) Thrust Washer
(5) Mechanical Lock Hub
(6) Lock-up Sleeve
(7) Lock-up Pork
(8) Chain
(9) Lower Drive Sprocket
(10) Front Tone Wheel
(11) Drive Sprocket
(12) Sprocket Spacer

Reassembly

1. Install oil pump.
2. Attach the hose and strainer to the oil pump.
3. Mount the oil pump to the output shaft and attach the magnet to the strainer set position.
4. Install thrust washer.

Downloaded from www.Manualslib.com manuals search engine

5. Attach the spring to the lock-up fork.
6. Mount the lock-up sleeve and fork together to the output shaft and shifter roll assembly.
7. Mount the spring retainer to the lock-up fork.

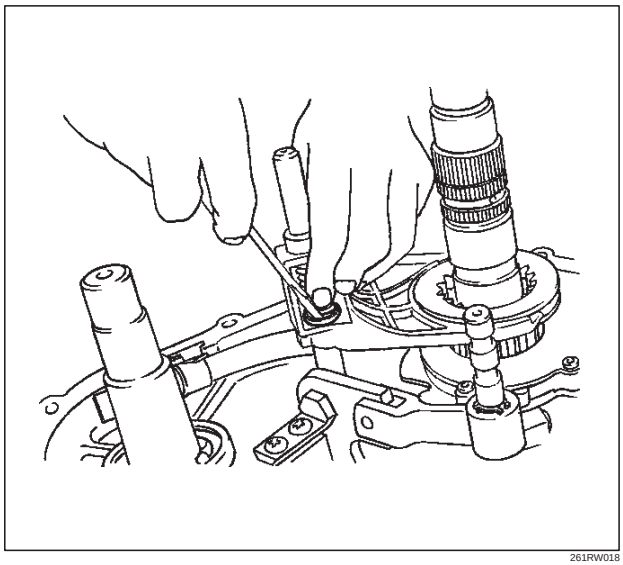

261RW018

8. Install mechanical lock hub.
9. Apply ATF to the chain.
10. Engage the chain to both sprockets.
11. Mount the chain and sprocket assembly to both the output shafts.

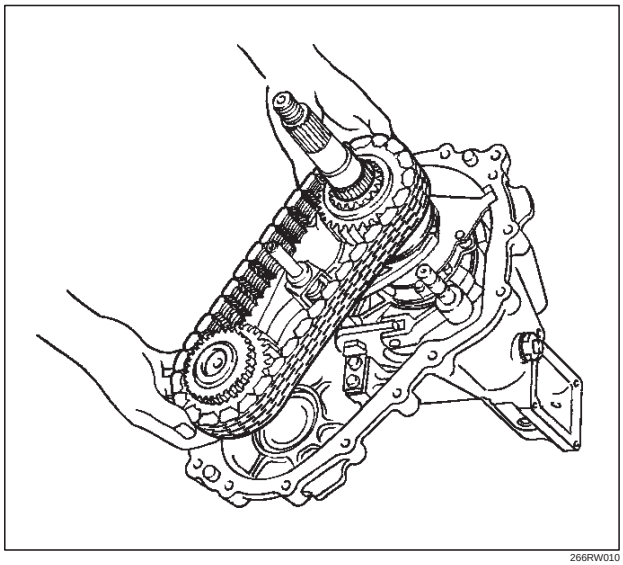

266RW010

Downloaded from www.Manualslib.com manuals search engine

Clutch Pack and Clutch Cam

Disassembled View

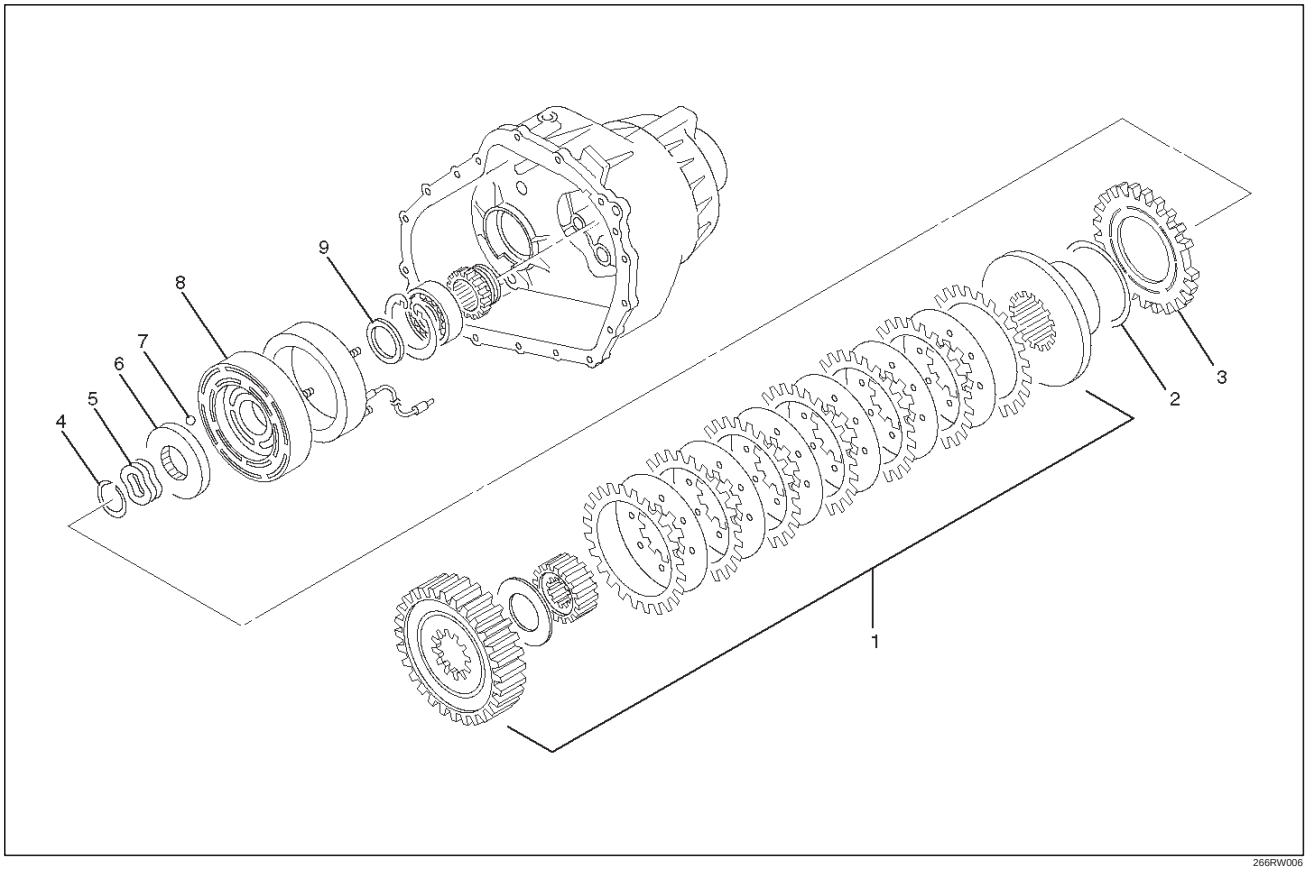

266RW006

Legend

(1) Clutch Pack Assembly
(2) Insulator Washer
(3) Armature Plate
(4) Snap Ring
(5) Wave Spring
(6) Cam Pulley
(7) Cam Ball
(8) Cam and Coil Housing
(9) Thrust Bearing

Reassembly

1. Mount the clutch pack assembly to which the multi plate disk clutch is already installed to the output shaft.

NOTE: Mount the clutch pack assembly while adjusting the phase of both the clutch housing and drive sprocket.

2. Install the insulator washer.
3. Install the armature plate.

Downloaded from www.Manualslib.com manuals search engine

4. Using snap ring pliers, attach the snap ring.

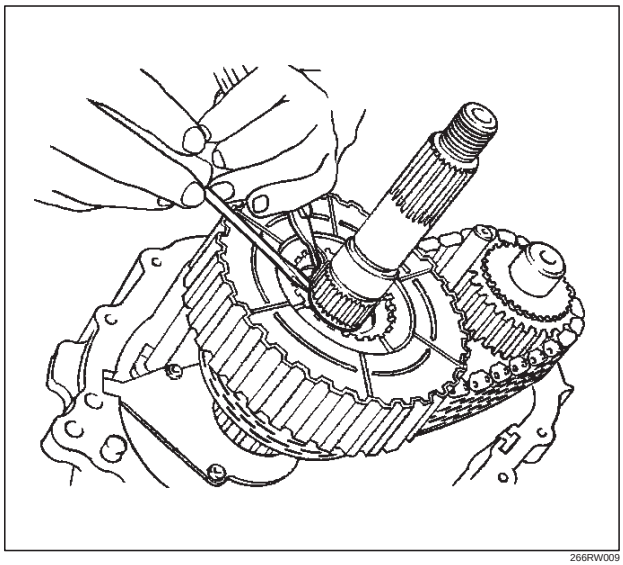

266RW009

5. Install the wave spring.
6. Install the cam pulley.
7. Place a ball on each groove of the cam pulley.

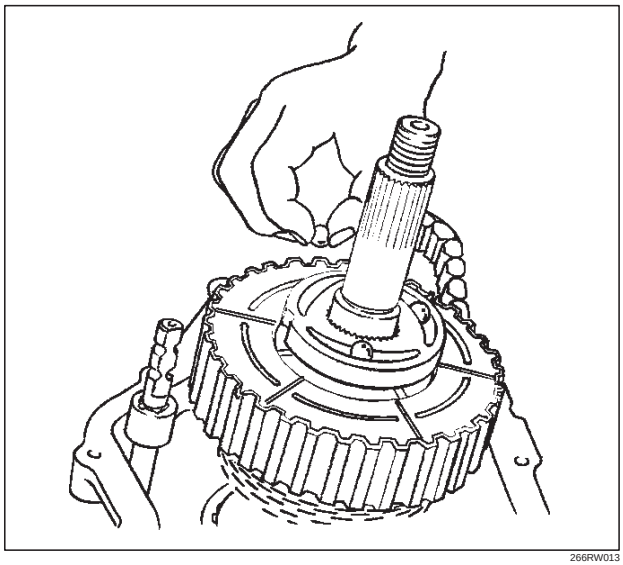

266RW013

8. Install the cam and coil housing.
9. Thrust bearing.

Downloaded from www.Manualslib.com manuals search engine

Main Data and Specifications

Leading Particulars

Type		Transfer case with low range reduction mechanisn
	2H	Rear wheel drive
	TOD	Electronically controlled torque split four wheel drive
	4L	Low-speed mechanical lock-up four wheel drive
Control system		Floor direct control
Gear ratio	H	1.000
	L	2.480
Oil quantity, Lit		1.9
Oil		ATF DEXRON®-IIE or ATF DEXRON®-III

Torque Specifications

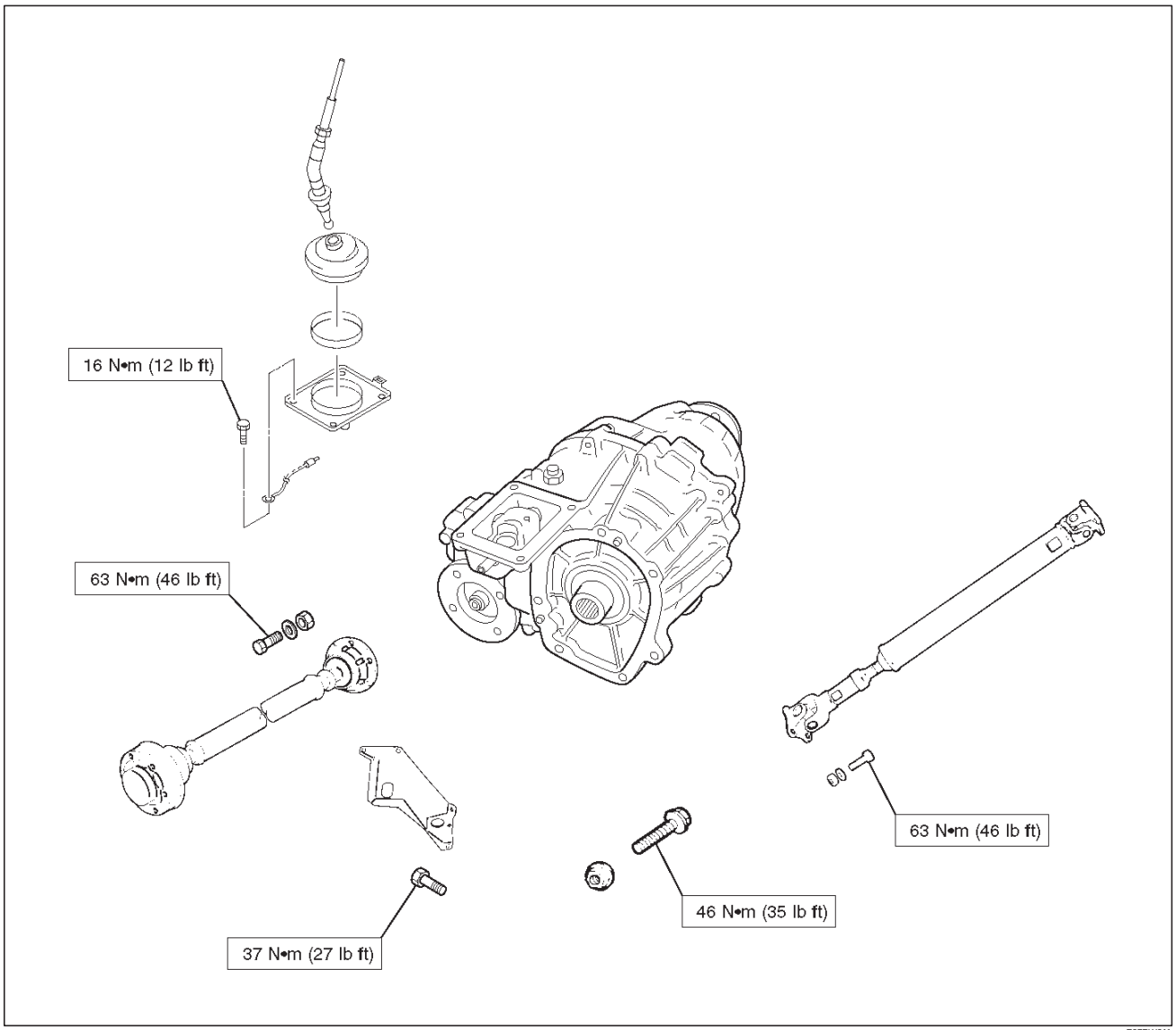

E07RW011

Downloaded from www.Manualslib.com manuals search engine

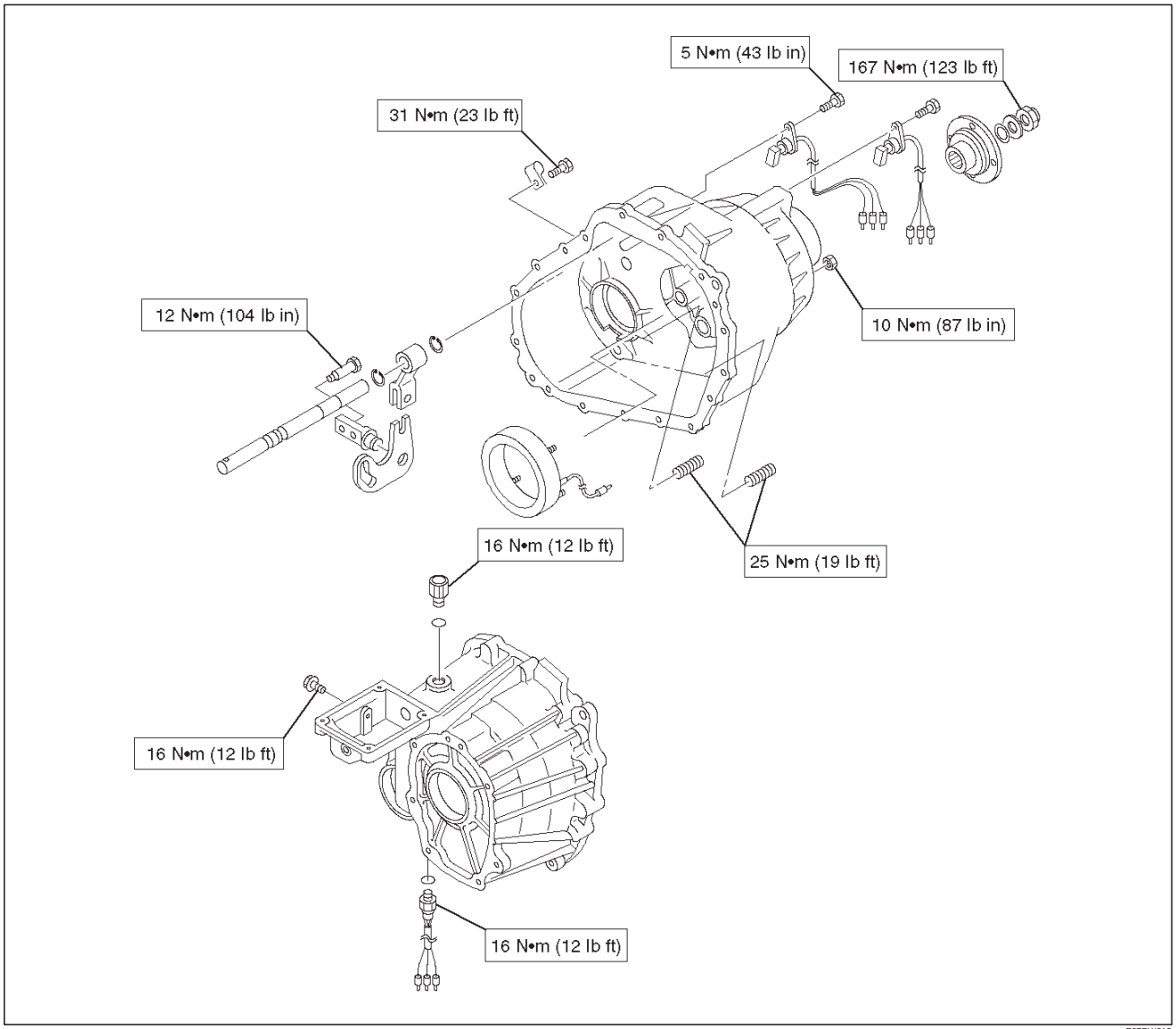

E07RW012

Downloaded from www.Manualslib.com manuals search engine

Special Tools

ILLUSTRATION	TOOL NO. TOOL NAME
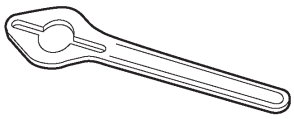 901RW071	**J–8614–11** Flange Holder
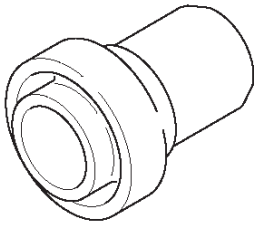 901RW095	**J–42804** Rear Oil Seal Installer
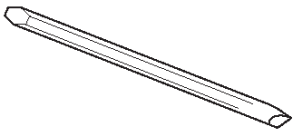 901RW089	**J–39209** Punch
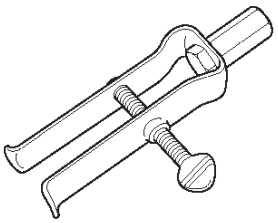 901RW094	**J–42805** Bearing Remover
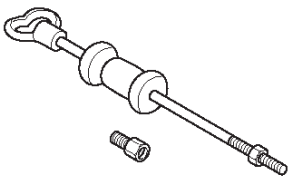 901RW096	**J–2619–01** Slide Hammer
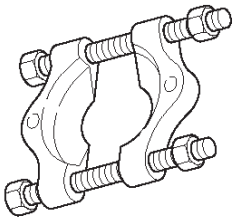 901RW091	**J–22912–01** Bearing Remover

ILLUSTRATION	TOOL NO. TOOL NAME
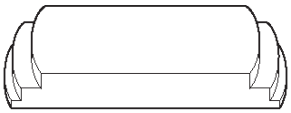 901RW093	**J–42806** Ring Gear Replacer
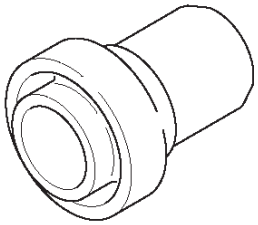 901RW095	**J–42807** Front Out Oil Seal Installer
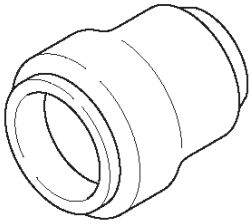 901RW097	**J–42808** Input Shaft Oil Seal Installer
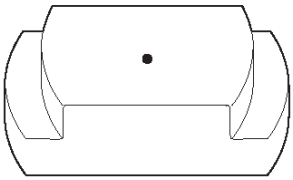 901RW098	**J–42809** Ring Gear Installer

Downloaded from www.Manualslib.com manuals search engine

TROOPER

BRAKES

CONTENTS

Brake Control System 5A–1
Anti–lock Brake System 5B–1
Power-Assisted Brake System 5C–1
Parking Brakes 5D–1

BRAKE CONTROL SYSTEM

CONTENTS

Service Precaution 5A–2
General Description 5A–3
System Components 5A–3
Electronic Hydraulic Control Unit (EHCU) . 5A–3
ABS Warning Light 5A–4
Wheel Speed Sensor 5A–4
G-Sensor 5A–4
Normal and Anti-lock Braking 5A–4
Brake Pedal Travel 5A–4
Acronyms and Abbreviations 5A–4
General Diagnosis 5A–5
General Information 5A–5
ABS Service Precautions 5A–5
Computer System Service Precautions . . . 5A–5
General Service Precautions 5A–5
Note on Intermittents 5A–5
Test Driving ABS Complaint Vehicles 5A–5
“ABS” Warning Light 5A–6
Normal Operation 5A–6
Basic Diagnostic Flow Chart 5A–6
Basic Inspection Procedure 5A–7
Tech 2 Scan Tool 5A–8
Getting Started 5A–9
Operating Procedure 5A–9
Data List 5A–11
EHCU Connector Pin-out Checks 5A–12
Circuit Diagram 5A–13
Connector List 5A–16
Part Location 5A–18
Symptom Diagnosis 5A–19
Chart A–1 ABS Works Frequently But Vehicle Does Not Decelerate 5A–19
Chart TA-1 ABS Works Frequently But Vehicle Does Not Decelerate (Use TECH 2) 5A–20
Chart A-2 Uneven Braking Occurs While ABS Works 5A–20
Chart A-3, TA-3 The Wheels Are Locked . 5A–21
Chart A-4 Brake Pedal Feed Is Abnormal . 5A–21
Chart A-5,TA-5 Braking Sound (From EHCU) Is Heard While Not Braking 5A–22
Diagnostic Trouble Codes 5A–23
Diagnosis By “ABS” Warning Light Illumination Pattern 5A–24
Diagnostic Trouble Codes (DTCs) 5A–24
Chart B-1 With the key in the ON position (Before starting the engine). Warning light (W/L) is not activated. 5A–27
Chart B-2 EHCU Abnormality (DTC 14) . . . 5A–27
Chart B-3 Power Voltage Drop (DTC 15) . . 5A–28
Chart B-4 CLASS-2 Communication Line Abnormality (DTC 16) 5A–28
Chart B-5 G-Sensor Circuit (DTC 21) 5A–28
Chart B-6 Abnormal Transmission Input (DTC 23) 5A–29
Chart B-7 Transfer Monitor (DTC 24) 5A–30
Chart B-8 EHCU Pump Motor And Motor Relay Circuit (DTC 32) 5A–30
Chart B-9 EHCU Pump Valve And Valve Relay Circuit (DTC 35) 5A–31
Chart B-10 FL Isolation Solenoid Valve Abnormality (DTC 41) 5A–31
Chart B-11 FL Dump Solenoid Valve Abnormality (DTC 42) 5A–31
Chart B-12 FR Isolation Solenoid Valve Abnormality (DTC 43) 5A–32
Chart B-13 FR Dump Solenoid Valve Abnormality (DTC 44) 5A–32
Chart B-14 Rear Isolation Solenoid Valve Abnormality (DTC 45) 5A–32
Chart B-15 Rear Dump Solenoid Valve Abnormality (DTC 46) 5A–33
Chart B-16 FL Speed Sensor Disconnection (DTC 51) 5A–33
Chart B-17 FR Speed Sensor Disconnection (DTC 52) 5A–34
Chart B-18 RL Speed Sensor Disconnection (DTC 53) 5A–34
Chart B-19 RR Speed Sensor Disconnection (DTC 54) 5A–35
Chart B-20 FL Speed Sensor Short Circuit (DTC 61) 5A–36
Chart B-21 FR Speed Sensor Short Circuit (DTC 62) 5A–37
Chart B-22 RL Speed Sensor Short Circuit (DTC 63) 5A–38
Chart B-23 RR Speed Sensor Short Circuit (DTC 64) 5A–39
Chart B-24 Sensor Signal Input Abnormality (DTC 65) 5A–40
Sensor Signal Abnormality Criteria using TECH 2 . . . . . 5A–40
Unit Inspection Procedure 5A–41

Downloaded from www.Manualslib.com manuals search engine

Chart C-1-1 FL Sensor Output Inspection Procedure 5A–41
Chart C-1-2 FR Sensor Output Inspection Procedure 5A–42
Chart C-1-3 RL Sensor Output Inspection Procedure 5A–42
Chart C-1-4 RR Sensor Output Inspection Procedure 5A–43
Chart TC-1 Sensor Output Inspection Procedure (Use TECH 2) 5A–43
Chart C-2 Transmission Input Inspection Procedure 5A–44
Chart TC-2 Transmission Input Inspection Procedure (Use TECH 2) 5A–44
Special Tools 5A–46

Service Precaution

WARNING: THIS VEHICLE HAS A SUPPLEMENTAL RESTRAINT SYSTEM (SRS). REFER TO THE SRS COMPONENT AND WIRING LOCATION VIEW IN ORDER TO DETERMINE WHETHER YOU ARE PERFORMING SERVICE ON OR NEAR THE SRS COMPONENTS OR THE SRS WIRING. WHEN YOU ARE PERFORMING SERVICE ON OR NEAR THE SRS COMPONENTS OR THE SRS WIRING, REFER TO THE SRS SERVICE INFORMATION. FAILURE TO FOLLOW WARNINGS COULD RESULT IN POSSIBLE AIR BAG DEPLOYMENT, PERSONAL INJURY, OR OTHERWISE UNNEEDED SRS SYSTEM REPAIRS.

CAUTION: Always use the correct fastener in the proper location. When you replace a fastener, use ONLY the exact part number for that application. ISUZU will call out those fasteners that require a replacement after removal. ISUZU will also call out the fasteners that require thread lockers or thread sealant. UNLESS OTHERWISE SPECIFIED, do not use supplemental coatings (Paints, greases, or other corrosion inhibitors) on threaded fasteners or fastener joint interfaces. Generally, such coatings adversely affect the fastener torque and the joint clamping force, and may damage the fastener. When you install fasteners, use the correct tightening sequence and specifications. Following these instructions can help you avoid damage to parts and systems.

Downloaded from www.Manualslib.com manuals search engine

General Description

The Anti-lock Brake System (ABS) works on all four wheels. A combination of wheel speed sensor and Electronic Hydraulic Control Unit (EHCU) can determine when a wheel is about to stop turning and adjust brake pressure to maintain best braking.

This system helps the driver maintain greater control of the vehicle under heavy braking conditions.

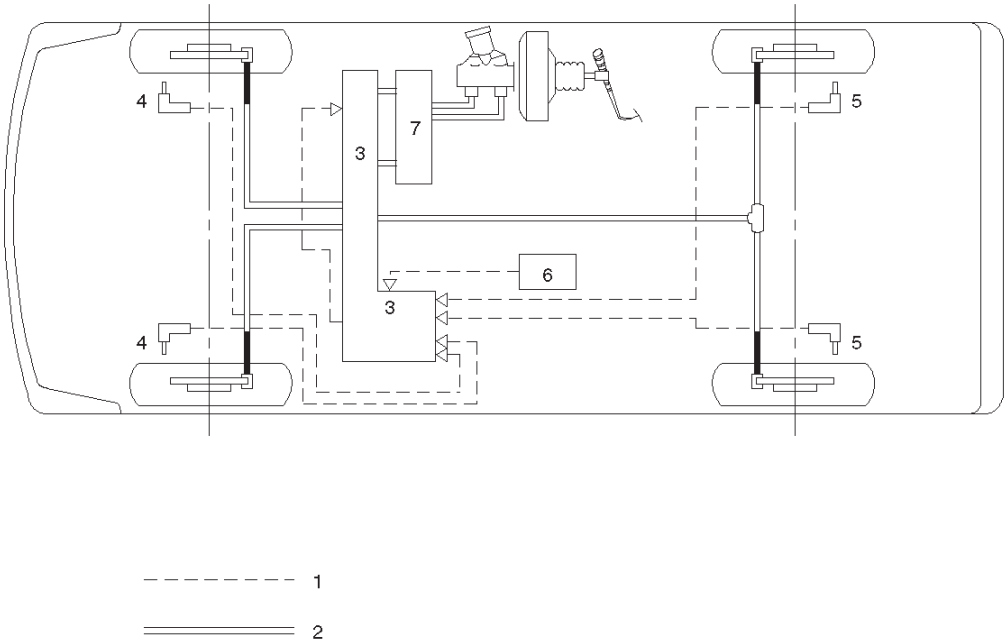

C05RW002

Legend

(1) Electronic
(2) Hydraulic
(3) Electronic Hydraulic Control Unit (EHCU)
(4) Front Wheel Speed Sensor
(5) Rear Wheel Speed Sensor
(6) G-Sensor
(7) Proportioning and Bypass (P&B) Valve

System Components

Electronic Hydraulic Control Unit (EHCU), four Wheel Speed Sensors, Warning Light, and G-sensor.

Electronic Hydraulic Control Unit (EHCU)

The EHCU consists of ABS control circuits, fault detector, and a fail-safe. It drives the hydraulic unit according to the signal from each sensor, cancelling ABS to return to normal braking when a malfunction has occurred in the ABS.

The EHCU has a self-diagnosing function which can indicate faulty circuits during diagnosis.

The EHCU is mounted on the engine compartment front right side. It consists of a Motor, Plunger Pump, Solenoid Valves and Check Valve.

On the outside, the relay box containing a motor relay and a valve relay is installed.

Solenoid Valves: Reduces or holds the caliper fluid pressure for each front disc brake or both rear disc brakes according to the signal sent from the EHCU.

Reservoir: Temporarily holds the brake fluid that returns from the front and rear disc brake caliper so that pressure of front disc brake caliper can be reduced smoothly.

Plunger Pump: Feeds the brake fluid held in the reservoir to the master cylinder.

Downloaded from www.Manualslib.com manuals search engine

Motor: Drives the pump according to the signal from EHCU.
Check Valve: Controls the brake fluid flow.

ABS Warning Light

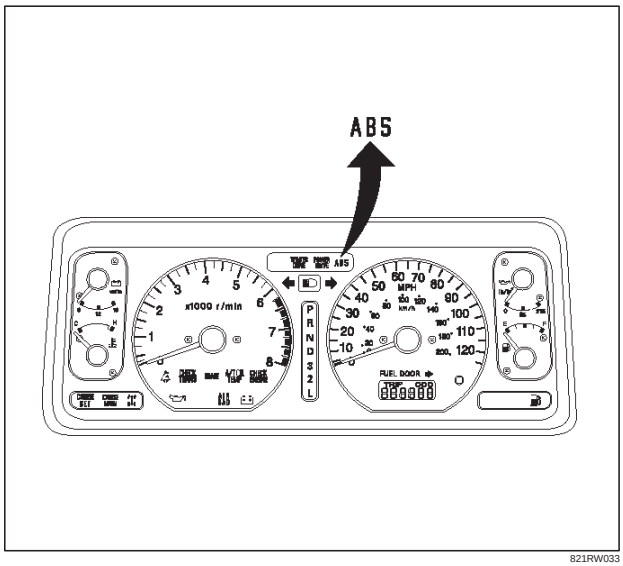

821RW033

Vehicles equipped with the Anti-lock Brake System have an amber “ABS” warning light in the instrument panel. The “ABS” warning light will illuminate if a malfunction in the Anti-lock Brake System is detected by the Electronic Hydraulic Control Unit (EHCU). In case of an electronic malfunction, the EHCU will turn “ON” the “ABS” warning light and disable the Anti-lock braking function.
The “ABS” light will turn “ON” for approximately three seconds after the ignition switch is to the “ON” position.
If the “ABS” light stays “ON” after the ignition switch is the “ON” position, or comes “ON” and stays “ON” while driving, the Anti-lock Brake System should be inspected for a malfunction according to the diagnosis procedure.

Wheel Speed Sensor

It consists of a sensor and a rotor. The sensor is attached to the knuckle on the front wheels and to the axle shaft bearing holder on the rear wheels.
The rotor is press-fit in the axle shaft.
The flux generated from electrodes magnetized by a magnet in the sensor varies due to rotation of the rotor, and the electromagnetic induction generates alternating voltage in the coil. This voltage draws a “sine curve” with the frequency proportional to rotor speed and it allows detection of wheel speed.

G-Sensor

The G-sensor installed inside the center console detects the vehicle deceleration speed and sends a signal to the EHCU. In 4WD operation, all four wheels may be decelerated in almost the same phase, since all wheels are connected mechanically.
This tendency is noticeable particularly on roads with low friction coefficient, and the ABS control is adversely affected.

The G-sensor judges whether the friction coefficient of road surface is low or high, and changes the EHCU’s operating system to ensure ABS control.

Normal and Anti-lock Braking

Under normal driving conditions, the Anti-lock Brake System functions the same as a standard power assisted brake system. However, with the detection of wheel lock-up, a slight bump or kick-back will be felt in the brake pedal. This pedal “bump” will be followed by a series of short pedal pulsations which occurs in rapid succession. The brake pedal pulsation will continue until there is no longer a need for the anti-lock function or until the vehicle is stopped. A slight ticking or popping noise may be heard during brake applications when the Anti-lock features is being used.
When the Anti-lock feature is being used, the brake pedal may rise even as the brakes are being applied. This is also normal. Maintaining a constant force on the pedal will provide the shortest stopping distance.

Brake Pedal Travel

Vehicles equipped with the Anti-lock Brake System may be stopped by applying normal force to the brake pedal. Although there is no need to push the pedal beyond the point where it stops or holds the vehicle, by applying more force the pedal will continue to travel toward the floor.
This extra brake pedal travel is normal.

Acronyms and Abbreviations

Several acronyms and abbreviations are commonly used throughout this section:

ABS
Anti-lock Brake System

CKT
Circuit

DLC
Data Link Connector

EHCU
Electronic Hydraulic Control Unit

FL
Front Left

FR
Front Right

GEN
Generator

MV
Millivolts

RL
Rear Left

RR
Rear Right

RPS
Revolution per Second

VDC
Volts DC

Downloaded from www.Manualslib.com manuals search engine

VAC
Volts AC

W/L
Warning Light

WSS
Wheel Speed Sensor

General Diagnosis

General Information

ABS malfunction can be classified into two types, those which can be detected by the ABS warning light and those which can be detected as a vehicle abnormality by the driver.
In either case, locate the fault in accordance with the "BASIC DIAGNOSTIC FLOWCHART" and repair.
Please refer to Section 5C for the diagnosis of mechanical troubles such as brake noise, brake judder (brake pedal or vehicle vibration felt when braking), uneven braking, and parking brake trouble.

ABS Service Precautions

Required Tools and Items:

- Box Wrench
- Brake Fluid
- Special Tool

Some diagnosis procedures in this section require the installation of a special tool.

J-39200 High Impedance Multimeter

When circuit measurements are requested, use a circuit tester with high impedance.

Computer System Service Precautions

The Anti-lock Brake System interfaces directly with the Electronic Hydraulic Control Unit (EHCU) which is a control computer that is similar in some regards to the Powertrain Control Module. These modules are designed to withstand normal current draws associated with vehicle operation. However, care must be taken to avoid overloading any of the EHCU circuits. In testing for opens or shorts, do not ground or apply voltage to any of the circuits unless instructed to do so by the appropriate diagnostic procedure. These circuits should only be tested with a high impedance multimeter (J-39200) or special tools as described in this section. Power should never be removed or applied to any control module with the ignition in the "ON" position.
Before removing or connecting battery cables, fuses or connectors, always turn the ignition switch to the "OFF" position.

General Service Precautions

The following are general precautions which should be observed when servicing and diagnosing the Anti-lock Brake System and/or other vehicle systems. Failure to observe these precautions may result in Anti-lock Brake System damage.

- If welding work is to be performed on the vehicle using an electric arc welder, the EHCU and valve block connectors should be disconnected before the welding operation begins.
- The EHCU and valve block connectors should never be connected or disconnected with the ignition "ON" .
- EHCU of the Anti-lock Brake System are not separately serviceable and must be replaced as assemblies. Do not disassemble any component which is designated as non-serviceable in this Section.
- If only rear wheels are rotated using jacks or drum tester, the system will diagnose a speed sensor malfunction and the "ABS" warning light will illuminate. But actually no trouble exists. After inspection stop the engine once and re-start it, then make sure that the "ABS" warning light does not illuminate.

If the battery has been discharged

The engine may stall if the battery has been completely discharged and the engine is started via jumper cables. This is because the Anti-lock Brake System (ABS) requires a large quantity of electricity. In this case, wait until the battery is recharged, or set the ABS to a non-operative state by removing the fuse for the ABS (40A). After the battery has been recharged, stop the engine and install the ABS fuse. Start the engine again, and confirm that the ABS warning light does not light.

Note on Intermittents

As with virtually any electronic system, it is difficult to identify an intermittent failure. In such a case duplicating the system malfunction during a test drive or a good description of vehicle behavior from the customer may be helpful in locating a "most likely" failed component or circuit. The symptom diagnosis chart may also be useful in isolating the failure. Most intermittent problems are caused by faulty electrical connections or wiring. When an intermittent failure is encountered, check suspect circuits for:

- Suspected harness damage.
- Poor mating of connector halves or terminals not fully seated in the connector body (backed out).
- Improperly formed or damaged terminals.

Test Driving ABS Complaint Vehicles

In case that there has been an malfunction in the lighting pattern of "ABS" warning light, the fault can be located in accordance with the "DIAGNOSIS BY "ABS" WARNING LIGHT ILLUMINATION PATTERN" . In case of such trouble as can be detected by the driver as a vehicle symptom, however, it is necessary to give a test drive following the test procedure mentioned below, thereby reproducing the symptom for trouble diagnosis on a symptom basis:

1. Start the engine and make sure that the "ABS" W/L goes OFF. If the W/L remains ON, it means that the Diagnostic Trouble Code (DTC) is stored. Therefore, read the code and locate the fault.
2. Start the vehicle and accelerate to about 30 km/h (19 mph) or more.

Downloaded from www.Manualslib.com manuals search engine

3. Slowly brake and stop the vehicle completely.
4. Then restart the vehicle and accelerate to about 40 km/h (25 mph) or more.
5. Brake at a time so as to actuate the ABS and stop the vehicle.
6. Be cautious of abnormality during the test. If the W/L is actuated while driving, read the DTC and locate the fault.
7. If the abnormality is not reproduced by the test, make best efforts to reproduce the situation reported by the customer.
8. If the abnormality has been detected, repair in accordance with the “SYMPTOM DIAGNOSIS” .

NOTE:

- Be sure to give a test drive on a wide, even road with little traffic.
- If an abnormality is detected, be sure to suspend the test and start trouble diagnosis at once.

“ABS” Warning Light

When ABS trouble occurs and actuates when possible the “ABS” warning light, the trouble code corresponding to the trouble is stored in the EHCU. Only the ordinary brake system is available when the ABS is turned off. When the “ABS” warning light is actuated, if the starter switch is set ON after setting it OFF once, the EHCU checks up on the entire system and, if there is no abnormality, judges ABS to work currently and the warning light works normally even though the trouble code is stored.

NOTE: Illumination of the “ABS” warning light indicates that anti-lock braking is no longer available. Power assisted braking without anti-lock control is still available.

Normal Operation

“ABS” Warning Light

When the ignition is first moved from “OFF” to “ON” , the amber “ABS” warning light will turn “ON” . The “ABS” warning light will turn “ON” during engine starting and will usually stay “ON” for approximately three seconds after the ignition switch is returned to the “ON” position. The warning light should remain “OFF” at all other times.

Basic Diagnostic Flow Chart

Step	Action	Yes	No
1	1. Customer complaint. 2. Questioning to customer. 3. Basic inspection (Refer to “Basic inspection procedure”) Using TECH 2?	Go to Step 2	Go to Step 4
2	Make sure of DTC by mode “F0 : Diagnostic Trouble Codes”. Is EHCU including DTC?	Go to Step 3	Go to Step 5
3	1. Repair of faulty part. 2. Elimination of DTC. 3. Inspection of “ABS” W/L Illumination pattern with ignition SW “ON”. 4. Test drive. Dose repeat trouble?	Repeat the diagnosis it the symptom or DTC appears again Go to Step 1	Go to Step 5
4	Check if the DTC is stored. Is EHCU including DTC?	Go to Step 3	Trouble diagnosis based on symptom (Refer to “SYMPTOM DIAGNOSIS”) Go to Step 3
5	1. Reconnect all components and ensure all component are properly mounted. 2. Clear diagnostic trouble code. Was this step finished?	Finished	Go to Step 5

Downloaded from www.Manualslib.com manuals search engine

Basic Inspection Procedure

1. Basic Inspection of System Brake

Step	Action	Yes	No
1	Is the fluid level normal?	Go to Step 2	Replenish with fluid. Go to Step 2
2	Does fluid leak?	Repair. Go to Step 3	Go to Step 3
3	Is the booster functioning normal?	Go to Step 4	Repair. Go to Step 4
4	Is the pad and rotor normal?	Go to Step 5	Repair. Go to Step 5
5	Reconnect all components and ensure all component are properly mounted. Was this step finished?	Finished	Go to Step 5

2. Inspection of Front Axle Switch

Step	Action	Yes	No
1	Turn the key switch on and shift to 4WD position by pressing the 4WD switch. Does the 4WD light come on?	Go to Step 2	Repair. Go to Step 2
2	Reconnect all components and ensure all components are properly mounted. Was this step finished?	Finished	Go to Step 2

3. Ground Inspection

Step	Action	Yes	No
1	Are ABS—related ground points ok?	Go to Step 2	Repair. Go to Step 2
2	Reconnect all components and ensure all components are properly mounted. Was this step finished?	Finished	Go to Step 2

Downloaded from www.Manualslib.com manuals search engine

Tech 2 Scan Tool

From 98 MY, Isuzu dealer service departments are recommended to use Tech 2. Please refer to Tech 2 scan tool user guide.

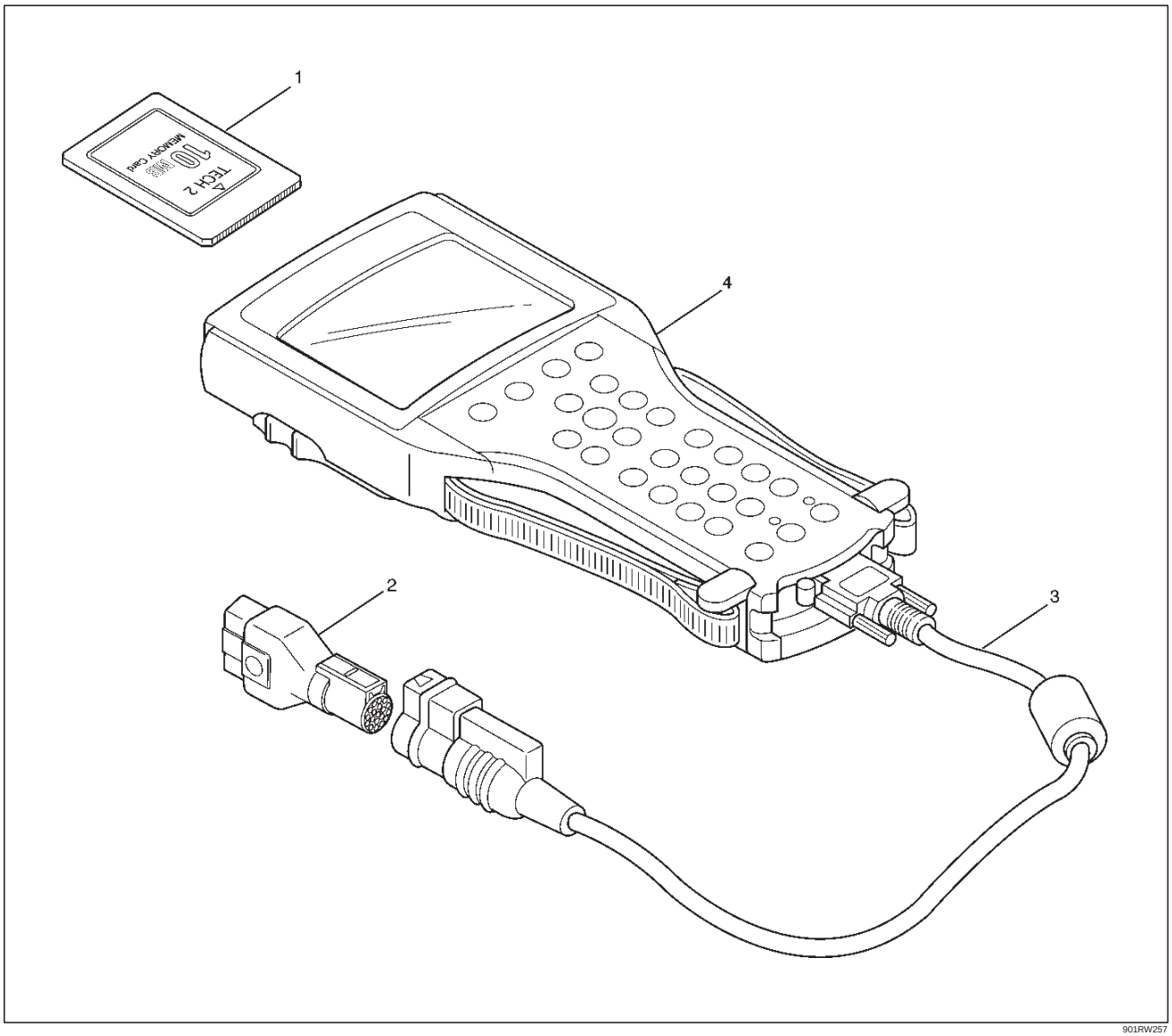

901RW257

Legend

(1) PCMCIA Card
(2) SAE 16/19 Adaptor
(3) DLC Cable
(4) Tech–2

Downloaded from www.Manualslib.com manuals search engine

Getting Started

- Before operating the Isuzu PCMCIA card with the Tech 2, the following steps must be performed:

1. The Isuzu 98 System PCMCIA card (1) inserts into the Tech 2 (4).
2. Connect the SAE 16/19 adapter (2) to the DLC cable (3).
3. Connect the DLC cable to the Tech 2 (4).
4. Make sure the vehicle ignition is off.
5. Connect the Tech 2 SAE 16/19 adapter to the vehicle DLC connector.

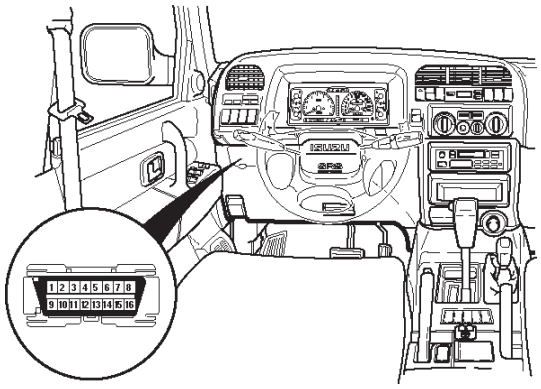

821RW021

6. The vehicle ignition turns on.
7. Power up the Tech 2.
8. Verify the Tech 2 power up display.

060RW009

Operating Procedure

The power up screen is displayed when you power up the tester with the Isuzu systems PCMCIA card. Follow the operating procedure below.

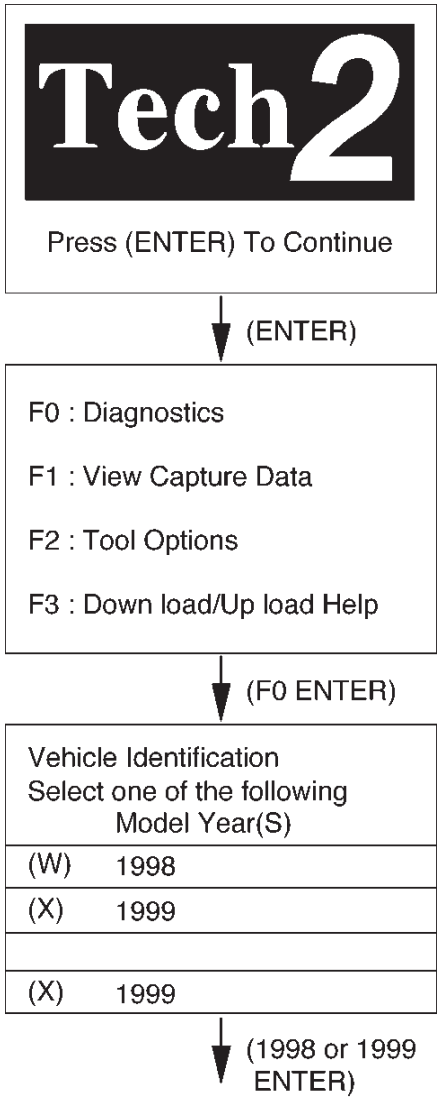

060RX065

Downloaded from www.Manualslib.com manuals search engine

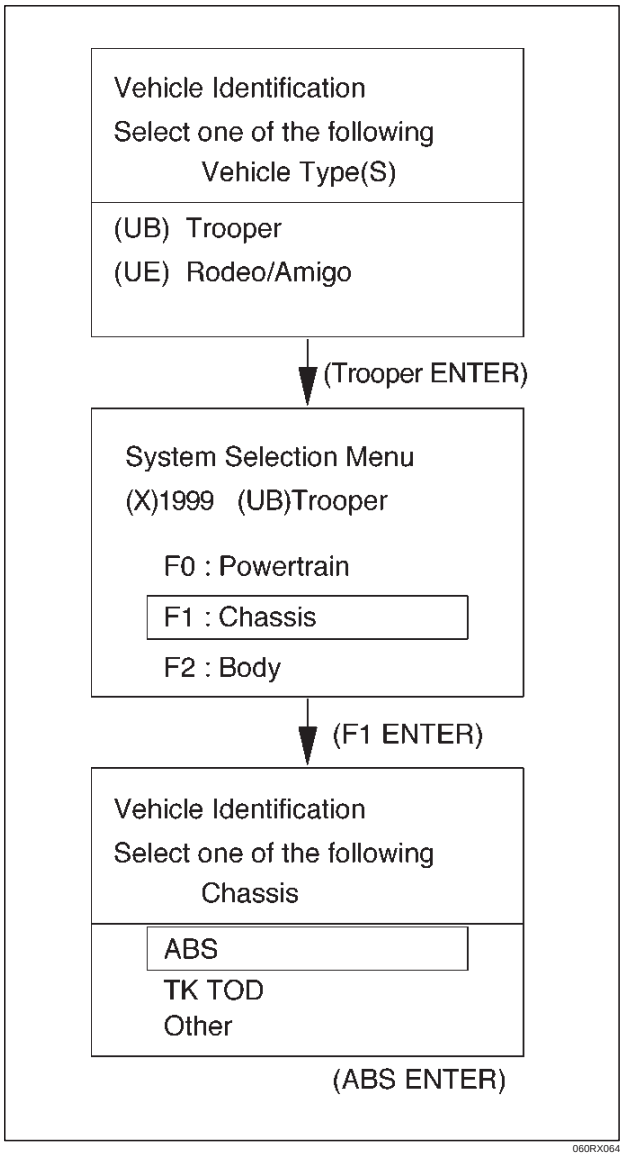

Downloaded from www.Manualslib.com manuals search engine

Data List

Display	Content	OK/NG Criteria for Data
Battery Voltage	Voltage	Between 10–16.9V
Brake Light Switch	Open/Close	Open(0V) when pedal is released
		Closed(12V) when pedal is depressed.
Front Left Wheel Speed Front Right Wheel Speed Rear Left Wheel Speed Rear Left Wheel Speed	MPH(km/h)	Start the vehicle and make sure of linear change in each wheel speed.
		Turn each wheel by hand and make sure that each speed data change.
Wheel Sensor Status	OK/NG	To be OK usually
G–sensor	Low/High	To be Low usually
Transfer Monitor(TOD)	2 Wheel Drive 4 Wheel Drive	When 2WD: 2 Wheel Drive When 4WD: 4 Wheel Drive
Off–Road Switch (Transmission Input)	Active/Inactive	When shift lever position is 1, 2 and R : Active (M/T)
		When shift lever position is L and R : Active (A/T)
Valve Relay	Active/Inactive	To be Active usually
ABS State	ON/OFF	To be OFF usually
ABS Relay	Active/Inactive	To be Active usually
Return Pump Relay	Active/Inactive	To be Inactive usually
Front Left Isolation Valve	Active/Inactive	To be Inactive usually
Front Left Dump Valve		
Front Right Isolation Valve		
Front Right Dump Valve		
Rear Isolation Valve		
Rear Dump Valve		
ABS Warning Lamp	ON/OFF	To be ON usually (while engine stopped)

Downloaded from www.Manualslib.com manuals search engine

EHCU Connector Pin-out Checks

- Disconnect Electronic Brake Control Module.
- Perform checks with high impedance digital multimeter J-39200 or equivalent.

No.	Circuit to be Tested	Ignition Switch Position	Multimeter Scale/Range	Measure between Pin Number	Nominal Value	Note
1	Ignition enable	OFF	20DCV	8 (+), 15 (–)	0V to 0.1V	
		ON	20DCV	8 (+), 15 (–)	11.5V to 14.5V	
2	Stop light switch	OFF	20DCV	10, 15	10.5V to 14.5V	Press brake pedal
3	Ground connection	OFF	200µ	12, Ground 15, Ground	Less than 2µ	
4	FL speed sensor	OFF	2kµ	20, 21	1.3k to 1.9kµ	Internal Resistance
		OFF	200kµ	20, 15	more than 100kµ	Insulation Resistance
		OFF	200mACV	20, 21	more than 200mV	Turn wheel at 1RPS
5	FR speed sensor	OFF	2kµ	4, 5	1.3k to 1.9kµ	Internal Resistance
		OFF	200kµ	4, 15	more than 100kµ	Insulation Resistance
		OFF	200mACV	4, 5	more than 200mV	Turn wheel at 1RPS
6	RL speed sensor	OFF	2kµ	22, 23	1.3k to 1.9kµ	Insulation Resistance
		OFF	200kµ	22, 15	more than 100kµ	Internal Resistance
		OFF	200mACV	22, 23	more than 200mV	Turn wheel at 1RPS
7	RR speed sensor	OFF	2kµ	2, 3	1.3k to 1.9kµ	Internal Resistance
		OFF	200kµ	2, 15	more than 100kµ	Insulation Resistance
		OFF	200mACV	2, 3	more than 200mV	Turn wheel at 1RPS
8	G-sensor	ON		26, 8	1k to 2kµ	Horizontal vehicle
9	Transmission Input	ON	20DCV	6 (+), 15 (–)	Less than 6V (shift lever position – L, R) 6.6 to 9.0V (other shift position)	A/T Battery voltage 12V
					More than 9.6V (shift lever position – 1, 2, R) 6.6 to 9.0V (other shift position)	M/T Battery voltage 12V

Downloaded from www.Manualslib.com manuals search engine

Circuit Diagram

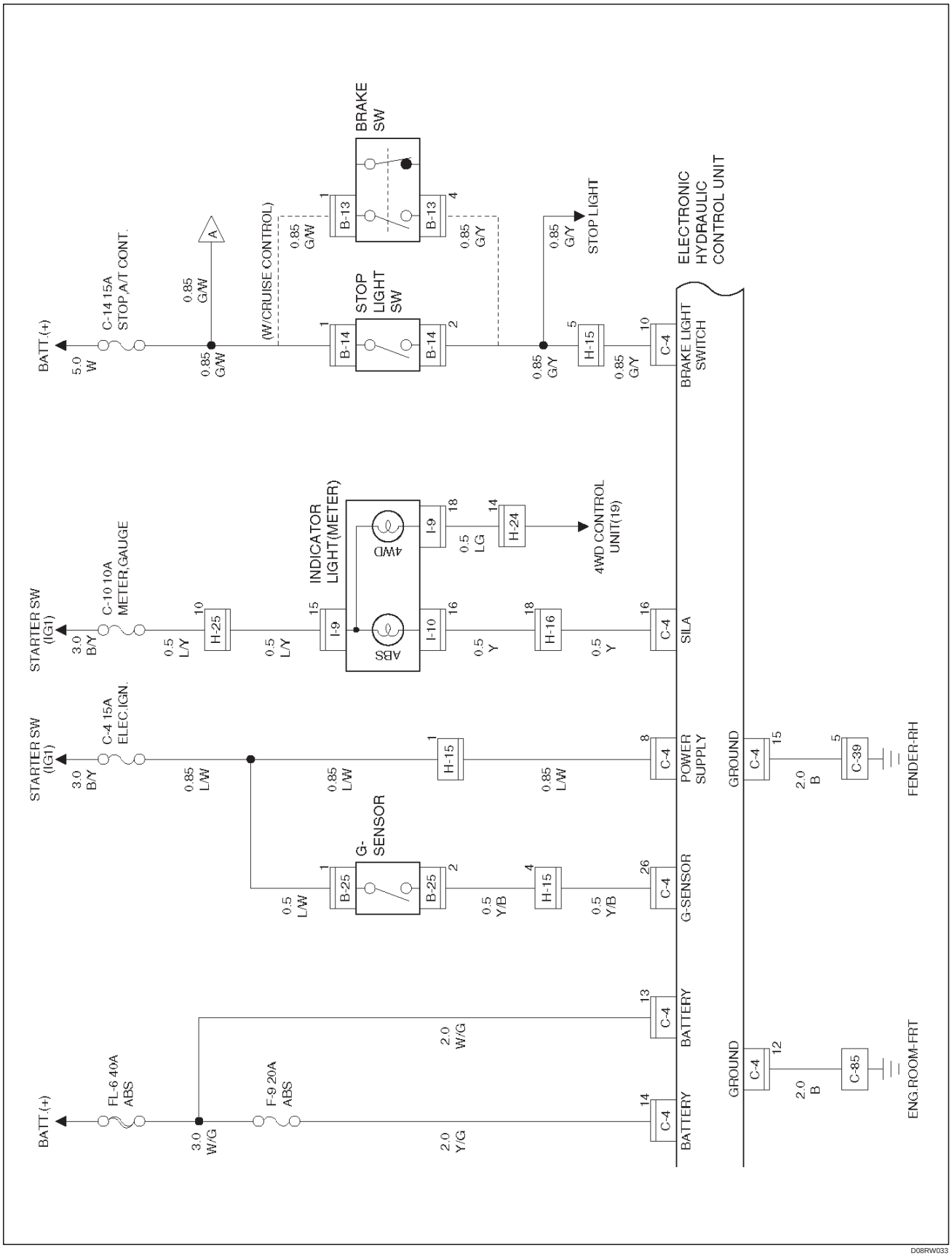

D08RW033

Downloaded from www.Manualslib.com manuals search engine

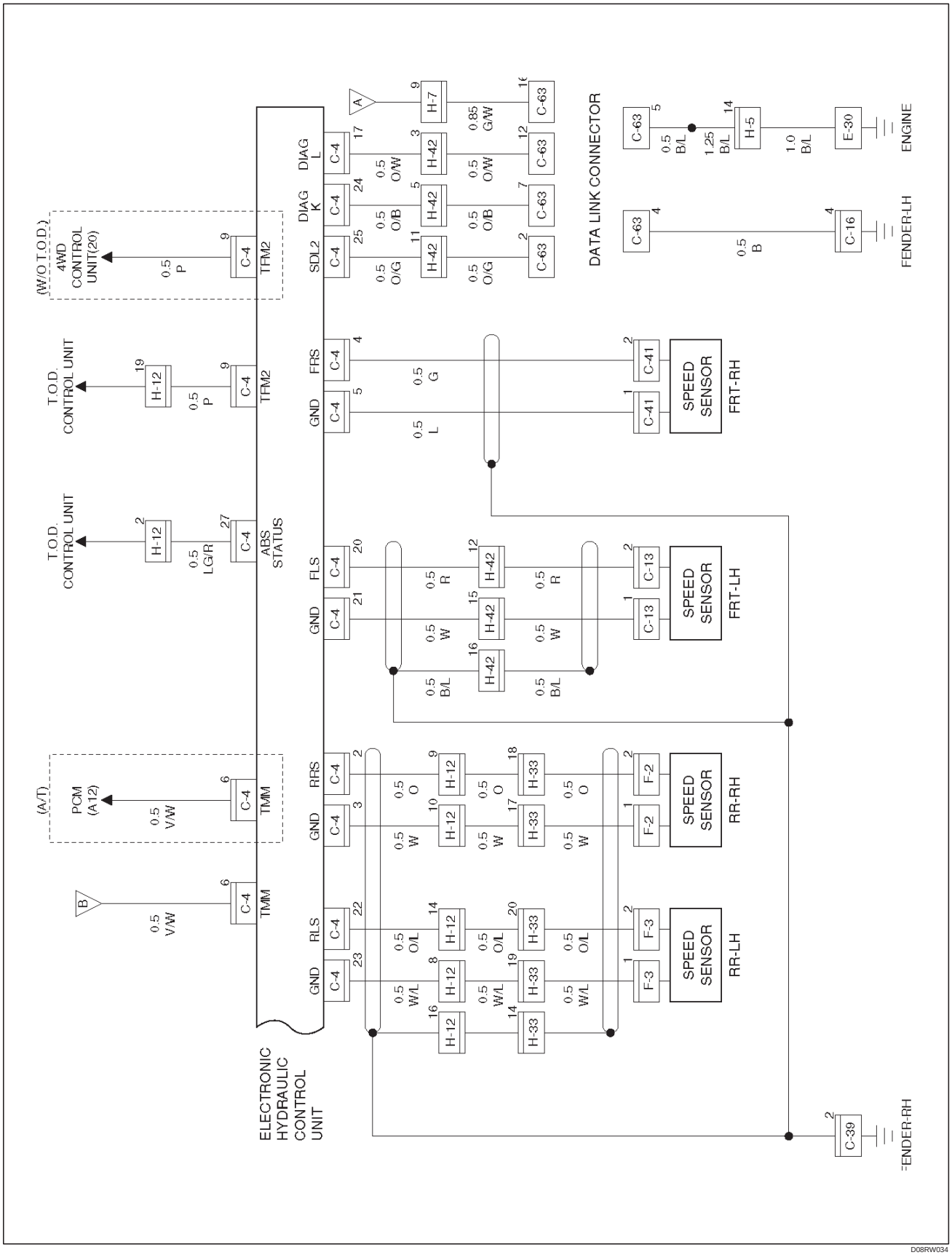

D08RW034

Downloaded from www.Manualslib.com manuals search engine

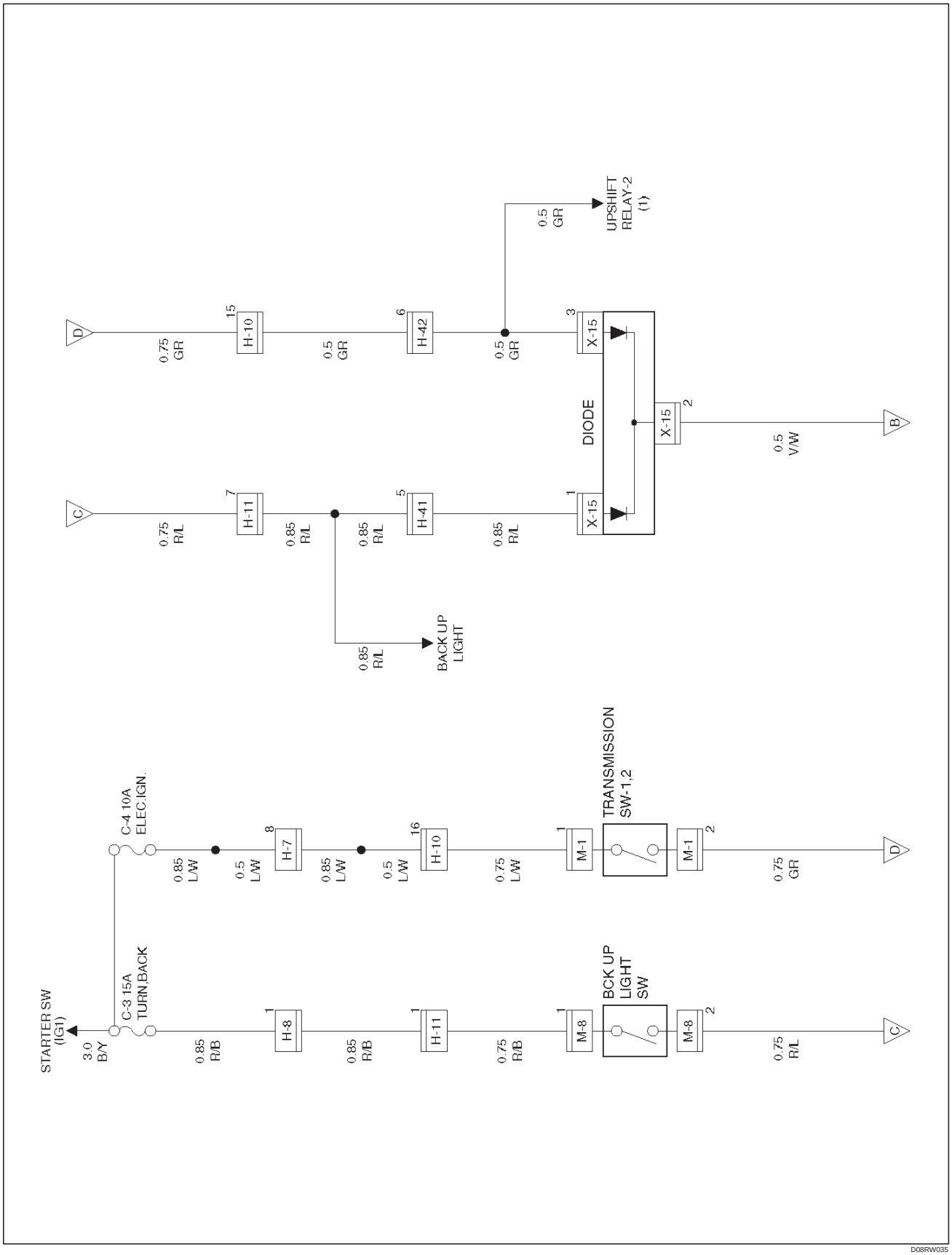

D08RW035

Downloaded from www.Manualslib.com manuals search engine

Connector List

No.	Connector face	No.	Connector face
B-13		C-85	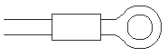
B-14		E-30	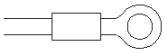
B-25		F-2	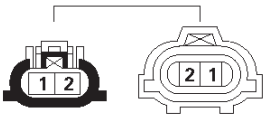
C-4		F-3	
C-13	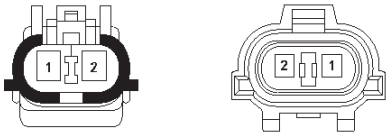	H-5	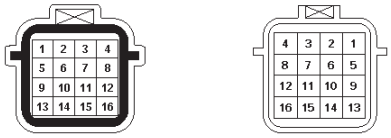
C-16		H-7	
C-39		H-8	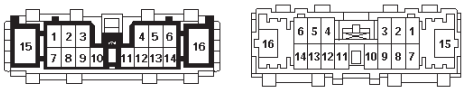
C-41	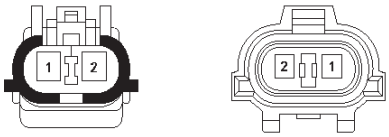	H-10	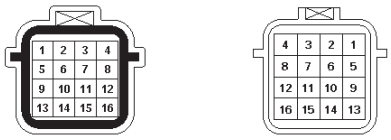
C-63	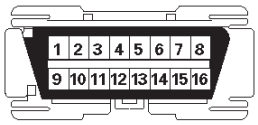	H-11	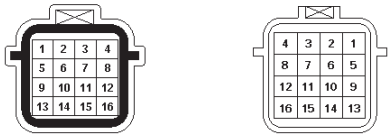

D05RW002

Downloaded from www.Manualslib.com manuals search engine

No.	Connector face	No.	Connector face
H-12	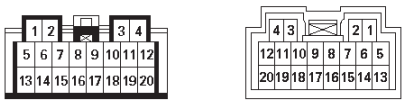	I-10	
H-15	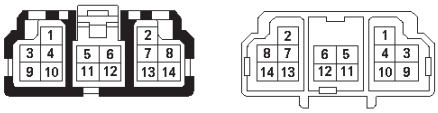	M-1	
H-16	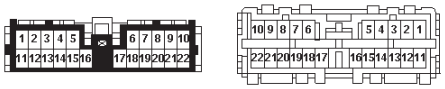	M-8	
H-24	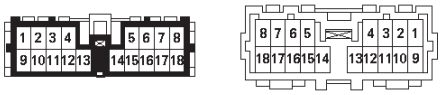	X-15	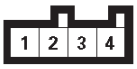
H-25	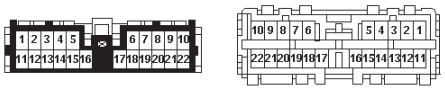		
H-33	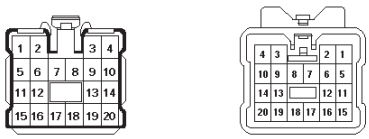		
H-41	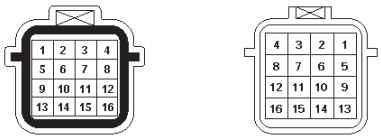		
H-42			
I-9			

D05RW003

Downloaded from www.Manualslib.com manuals search engine

Part Location

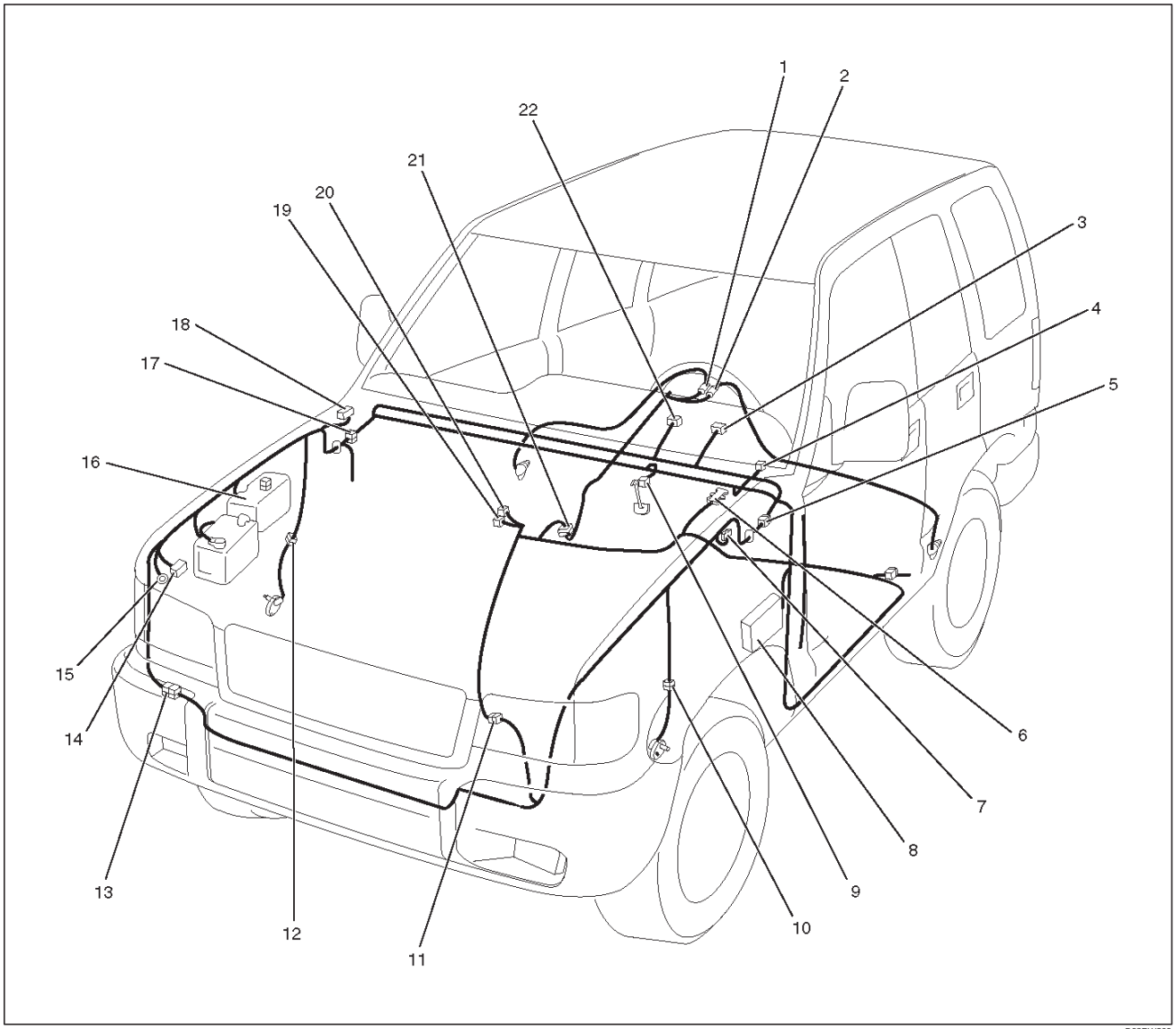

Legend

(1) F–2
(2) F–3
(3) I–9
(4) C–63
(5) H–7, H–8, H–24, H–25
(6) B–25
(7) C–16
(8) Fuse Box
(9) B–13 or B–14
(10) C–13
(11) H–10, H–11
(12) C–41
(13) H–41, H–42
(14) C–4
(15) C–85
(16) Relay & Fuse Box (X–15)
(17) H–12, H–15, H–16
(18) C–39
(19) M–1
(20) M–8
(21) H–33
(22) I–10

Downloaded from www.Manualslib.com manuals search engine

Symptom Diagnosis

The symptoms that cannot be indicated by the warning light can be divided in the following five categories:

1. ABS works frequently but vehicle does not decelerate.
2. Uneven braking occurs while ABS works.
3. The wheels lock during braking.
4. Brake pedal feel is abnormal.
5. Braking sound (from EHCU) is heard while not braking.

These are all attributable to problems which cannot be detected by EHCU self-diagnosis. Use the customer complaint and a test to determine which symptom is present. Then follow the appropriate flow chart listed below.

No.	Symptom	Diagnostic Flow Charts	
		Without TECH 2	With TECH 2
1	ABS works frequently but vehicle does not decelerate.	Chart A–1	Chart TA–1
2	Uneven braking occurs while ABS works.	Chart A–2	—
3	The wheels are locked.	Chart A–3	Chart TA–3
4	Brake pedal feel is abnormal.	Chart A–4	—
5	Braking sound (from EHCU) is heard while not braking.	Chart A–5	Chart TA–5

Chart A–1 ABS Works Frequently But Vehicle Does Not Decelerate

Step	Action	Yes	No
1	1. Turn key off. 2. G Sensor connector and EHCU connector disconnected. Is there continuity between EHCU terminals 26 and 8?	Go to Step 2	Go to Step 3
2	Connect EHCU connector. Is there continuity between the G sensor and the EHCU?	Go to Step 3	Repair circuit. Go to Step 1
3	Is the G sensor normal? (Refer to chart B-5)	Go to Step 4	Replace G sensor. Go to Step 11
4	Is braking force distribution normal between the front and rear of the vehicle?	Go to Step 5	Repair brake parts. Go to Step 11
5	Are axle parts installed normally?	Go to Step 6	Repair axle parts. Go to Step 11
6	Is there play in each wheel speed sensor?	Repair wheel speed sensor. Go to Step 11	Go to Step 7
7	Is there damage, or powered iron sticking to each wheel speed sensor/sensor ring?	Replace sensor or sensor ring. Go to Step 11	Go to Step 8
8	Is the output of each wheel speed sensor normal? (Refer to chart C-1 or TC-1)	Go to Step 9	Replace wheel speed sensor or repair harness. Go to Step 11
9	Is the input of transmission normal? (Refer to chart C-2 or TC-2)	Go to Step 10	Replace switch or repair harness. Go to Step 11

Downloaded from www.Manualslib.com manuals search engine

Step	Action	Yes	No
10	Is the input of 4WD controller normal?	Go to Step 11	Replace controller or repair harness. Go to Step 11
11	Reconnect all components and ensure all components are properly mounted. Was this step finished?	Repeat the “Basic diagnostic flow chart.”	Go to Step 11

Chart TA-1 ABS Works Frequently But Vehicle Does Not Decelerate (Use TECH 2)

Step	Action	Yes	No
1	1. Connect TECH 2. 2. Make sure of the output conditions of each wheel speed sensor by mode “F1: Data Display”. Is the output of each sensor normal?	Go to Step 2	Replace wheel speed sensor. Go to Step 3
2	Return to Chart A-1. Was the Chart A-1 finished?	Go to Step 3	Go to Step 2
3	Reconnect all components, ensure all components are properly mounted. Was this step finished?	Repeat the “Basic diagnostic flow chart.”	Go to Step 3

Chart A-2 Uneven Braking Occurs While ABS Works

Step	Action	Yes	No
1	Is there play in each sensor?	Repair. Go to Step 5	Go to Step 2
2	Is there damage or powdered iron sticking to each sensor/sensor ring?	Repair. Go to Step 5	Go to Step 3
3	Is the output of each sensor normal? (Refer to chart C-1 or TC-1)	Go to Step 4	Replace sensor or repair harness. Go to Step 5
4	Is brake pipe connecting order correct?	Replace EHCU. Go to Step 5	Reconnect brake pipe correctly. Go to Step 5
5	Reconnect all components, ensure all components are properly mounted. Was this step finished?	Repeat the “Basic diagnostic flow chart.”	Go to Step 5

Downloaded from www.Manualslib.com manuals search engine

Chart A-3, TA-3 The Wheels Are Locked

Step	Action	Yes	No
1	Is ABS working?	Go to Step 2	Go to Step 6
2	Is vehicle speed under 10 km/h (6mph)?	Normal.	Go to Step 3
3	Is sensor output normal? (Chart C-1 or TC-1)	Go to Step 4	Replace sensor or repair harness. Go to Step 9
4	Is transmission input normal? (Chart C-2 or TC-2)	Go to Step 5	Replace SW or repair harness. Go to Step 9
5	Is front 4WD controller normal?	Replace EHCU. Go to Step 9	Replace 4WD controller or repair harness. Go to Step 9
6	Is transmission input normal? (Chart C-2 or TC-2)	Go to Step 7	Replace SW or repair harness Go to Step 9
7	Is front 4WD controller normal?	Go to Step 8	Replace 4WD controller or repair harness. Go to Step 9
8	Is hydraulic unit grounded properly?	Replace EHCU. Go to Step 9	Correct. Go to Step 9
9	Reconnect all components, ensure all components are properly mounted. Was this step finished?	Repeat the “Basic diagnostic flow chart.”	Go to Step 9

Chart A-4 Brake Pedal Feed Is Abnormal

Step	Action	Yes	No
1	Is the stop light actuated when the brake pedal is depressed?	Go to Step 2	Go to Step 3
2	1. Turn the ignition switch off. 2. Disconnected EHCU connector. 3. Measure voltage between the EHCU connector terminal 10 and 15 when brake pedal is depressed. Is the voltage equal to the battery voltage?	Go to Step 4	Harness NG between brake SW and EHCU. Go to Step 7
3	Is stop light fuse C-14 normal?	Go to Step 5	Replace fuse C-14. Go to Step 7
4	Is there continuity between EHCU connector terminals, 12 and 15 to body ground?	Go to Step 6	Repair body grounded harness. Go to Step 7
5	Is the brake SW normal?	Repair stop light harness. Go to Step 7	Replace brake SW. Go to Step 7

Downloaded from www.Manualslib.com manuals search engine

Step	Action	Yes	No
6	Is the check harness/connector for suspended disconnection?	Hydraulic system leakage or air entry (Refer to servicing "Leakage or brake fluid") Go to Step 7	Repair harness. Go to Step 7
7	Reconnect all components and ensure all components are properly mounted. Was this step finished?	Repeat the "Basic diagnostic flow chart."	Go to Step 7

Chart A-5,TA-5 Braking Sound (From EHCU) Is Heard While Not Braking

Step	Action	Yes	No
1	Is this the first time the vehicle is being driven after starting the engine?	It is self checking sound. Normal.	Go to Step 2
2	Is vehicle speed under 10 km/h (6 mph)?	It is self checking sound. Normal.	Go to Step 3
3	Check for the following condition: ● At the time of shift down or clutch operation. ● At the time of low μ drive (ice or snow road) or rough road drive. ● At the time of high-speed turn. ● At the time of passing curb. ● At the time of operating electrical equipment switches. ● At the time of racing the engine (over 5000 rpm). Did it occur under any one condition above?	ABS may sometime be actuated even when brake pedal is not applied.	Go to Step 4
4	Is there play in each sensor/wheel speed sensor rings?	Go to Step 5	Repair. Go to Step 7
5	Damage or powdered iron sticking to each sensor/wheel speed sensor ring?	Go to Step 6	Repair. Go to Step 7
6	Is each sensor output normal?(Refer to chart C-1 or TC-1).	Check harness/ connector for suspected disconnection. If no disconnection is found, replace EHCU. Go to Step 7	Repair. Go to Step 7
7	Reconnect all components, ensure all components are properly mounted. Was this step finished?	Repeat the "Basic diagnostic flow chart."	Go to Step 7

Downloaded from www.Manualslib.com manuals search engine

Diagnostic Trouble Codes

Choose and trace an appropriate flowchart by the numbers listed below to find fault and repair.

Code	Item	Diagnosis	Chart No.
12	Start Code	Normal	—
14	EHCU Function	Abnormality in input/output, operational and control circuits	B-2
15	Power Voltage Drop		B-3
16	CLASS–2 Communication Line Abnormality		B-4
21	G-sensor	Wiring disconnection	B-5
23	Transmission Input	Input abnormality	B-6
24	Transfer Monitor		B-7
32	Motor & Motor Relay	Shorted or disconnected coil	B-8
35	Valve Relay	Shorted or disconnected coil/wiring	B-9
41	FL Holding Solenoid Valve	Shorted or disconnected coil/wiring	B-10
42	FL Decompression Solenoid Valve	Shorted or disconnected coil/wiring	B-11
43	FR Holding Solenoid Valve	Shorted or disconnected coil/wiring	B-12
44	FR Decompression Solenoid Valve	Shorted or disconnected coil/wiring	B-13
45	Rear Holding Solenoid Valve	Shorted or disconnected coil/wiring	B-14
46	Rear Decompression Solenoid Valve	Shorted or disconnected coil/wiring	B-15
51	FL Wheel Speed Sensor	Disconnected coil/wiring	B-16
52	FR Wheel Speed Sensor	Disconnected coil/wiring	B-17
53	RL Wheel Speed Sensor	Disconnected coil/wiring	B-18
54	RR Wheel Speed Sensor	Disconnected coil/wiring	B-19
61	FL Wheel Speed Sensor	Shorted coil/wiring	B-20
62	FR Wheel Speed Sensor	Shorted coil/wiring	B-21
63	RL Wheel Speed Sensor	Shorted coil/wiring	B-22
64	RR Wheel Speed Sensor	Shorted coil/wiring	B-23
65	Sensor Signal Input	Wrong number of teeth	B-24

Downloaded from www.Manualslib.com manuals search engine

Diagnosis By “ABS” Warning Light Illumination Pattern

In the event that there is abnormality in the “ABS” warning light illumination pattern while the key is in the ON position or if the warning light is actuated during driving, trouble should be diagnosed on a illumination pattern basis as follows:

No.	Condition	“ABS” Warning Light Illumination Pattern	Diagnostic
1	Warning light is actuated normally	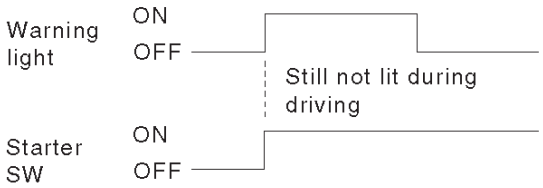	Normal
2	Warning light is not lit	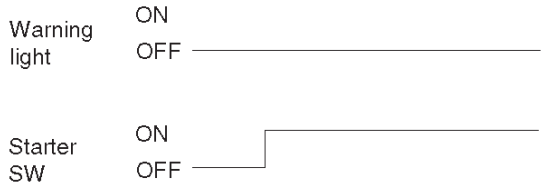	Warning light lighting circuit trouble→Go to Chart B-1
3	Warning light remains ON	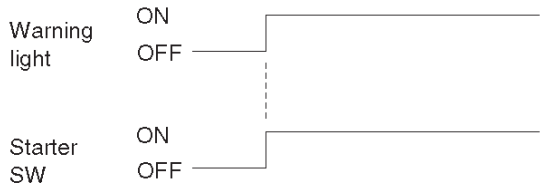	Diagnostic trouble codes are stored. Display diagnostic trouble codes and diagnose on a code basis according to the flow charts.
4	Warning light is actuated while driving	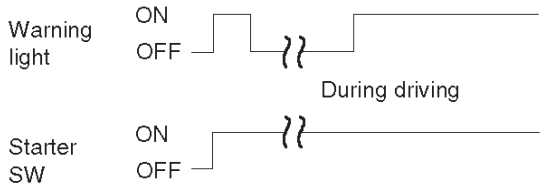	Diagnostic trouble codes are stored. Display diagnostic trouble codes and diagnose on a code basis according to the flow charts.

Diagnostic Trouble Codes (DTCs)

When the warning light in the meter remains ON, the EHCU stores the fault identification and disables the ABS.

1. How to display and erase DTCs:

NOTE:

- If DTCs are not displayed, harness C-4 connector terminal 30 and I-10 connector terminal 2 may be disconnected. Repair the harness and try DTC display again.
- DTCs can be displayed also by TECH 2. Select mode “F0: Diagnostic Trouble Codes” from Application Menu.

1. How to start DTC display:
   - Confirm that the vehicle has come to a complete stop (with the wheels standing still) and that the brake pedal is not depressed. (Unless these two conditions are satisfied, DTC display cannot be started.)
   - With IGN OFF, connect #12 terminal with #4 terminal or # 5 terminal (GND) . Then turn IGN ON.

Downloaded from www.Manualslib.com manuals search engine

The DLC is located behind the driver side kick panel

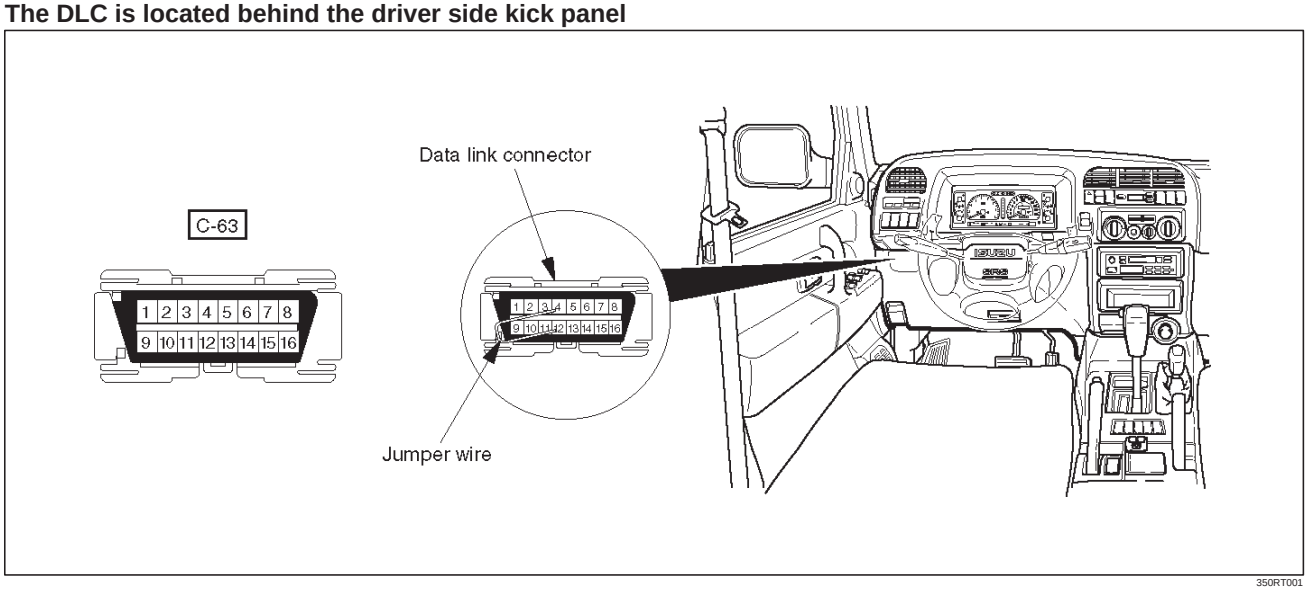

350RT001

- Keep #12 terminal connected with #4 terminal or # 5 terminal (GND) during DTC display. (If #12 terminal is separated from #4 terminal or # 5 terminal (GND) during display, display will stop.)

2. DTC display:
   - DTC is displayed by blinking warning light.
   - Double-digit display.
   - First, normal DTC 12 is displayed three times and then any other DTCs are displayed three times. (If no other DTCs have been stored, the display of DTC 12 will be repeated.)
3. How to erase code:
   - Conduct brake switch ON/OFF operation 6 or more times within 3 seconds of self-diagnosis startup.
   - The code cannot be erased if more than 3 seconds have passed since self-diagnosis startup, or if self-diagnosis has started with brake switched on (brake pedal depressed).

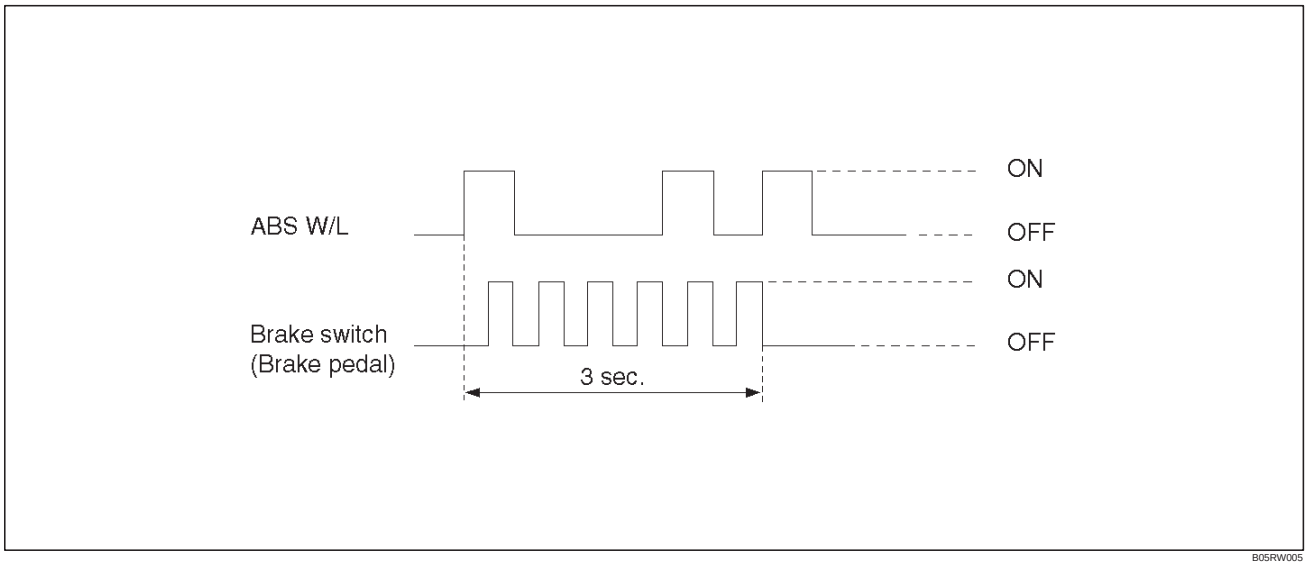

B05RW005

Downloaded from www.Manualslib.com manuals search engine

4. Notes
   - If the following should occurs during Diagnostic Trouble Code (DTC) display the display will be discontinued. After initial check, the status that is under the control of ABS will be returned :
     – The vehicle starts (The wheels turn) or the brake pedal is depressed.
   - Up to 3 different codes can be stored.
   - If the ABS should turn OFF due to an intermittent defect, the system will be restored at the next key cycle, if the initial check finds no abnormality (when IGN is switched from OFF to ON).
5. An example of DTC display

   Display of DTC 23

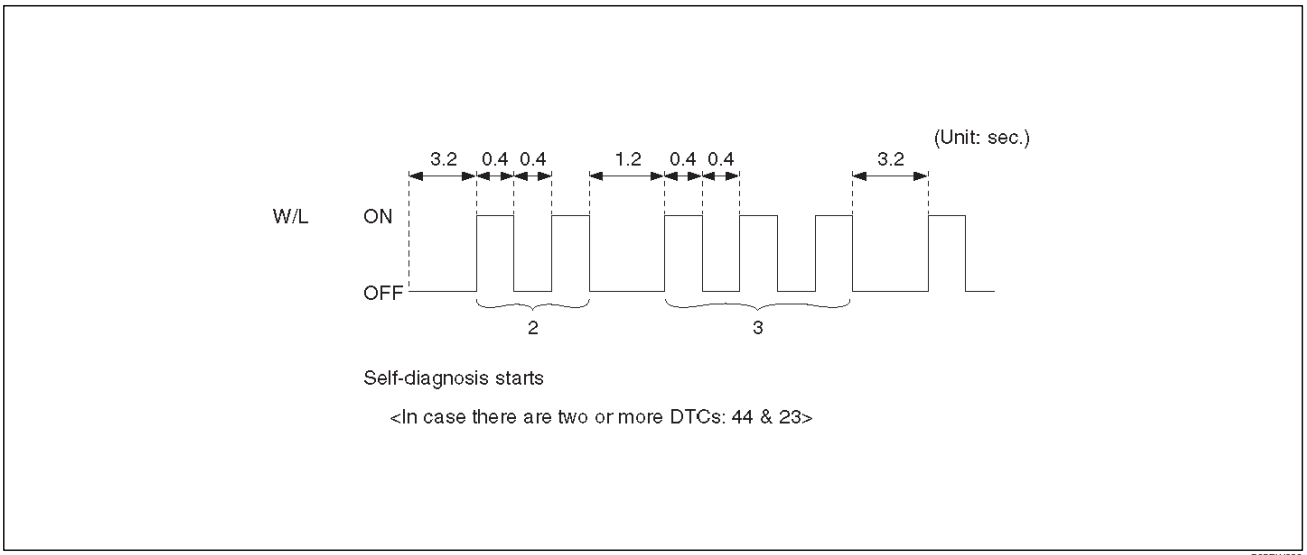

B05RW006

After displaying DTC 12 three times, one DTC after another is displayed, starting with the most recent one. (However, display is discontinued after about 5 minutes.)

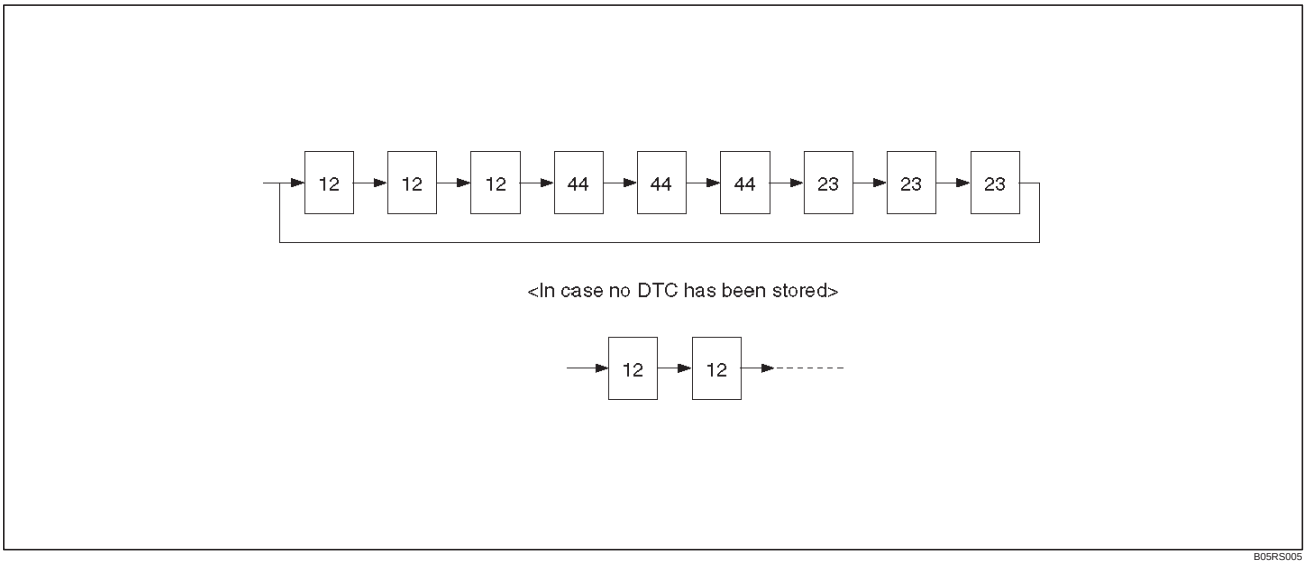

B05RS005

The DTC 12 is displayed repeatedly. (display is discontinued after about 5 minutes)

Downloaded from www.Manualslib.com manuals search engine

Chart B-1 With the key in the ON position (Before starting the engine). Warning light (W/L) is not activated.

Step	Action	Yes	No
1	Is W/L fuse C-10 disconnected?	Replace fuse. Go to Step 5	Go to Step 2
2	Is W/L burnt out?	Replace W/L bulb. Go to Step 5	Go to Step 3
3	1. Turn the key off. 2. Disconnect EHCU connector. 3. Turn the key ON. 4. Measure the voltage between EHCU connector terminal 16 and 15. Is the voltage equal to the battery voltage?	Go to Step 4	Repair harness and connector. Go to Step 5
4	Is there continuity between EHCU connector terminals, 12 and 15 and body ground.	Check harness for suspected disconnection. No fault found: Replace EHCU. Go to Step 5	Repair harness and connector. Go to Step 5
5	Reconnect all components, ensure all components are properly mounted. Was this step finished?	Repeat the “Basic diagnostic flow chart.”	Go to Step 5

Chart B-2 EHCU Abnormality (DTC 14)

Step	Action	Yes	No
1	1. Turn the key off. 2. Disconnect the EHCU connector. 3. Inspect EHCU ground. Is there resistance between the EHCU connector terminals, 12 and 15 and body ground?	Go to Step 2	Repair the body ground harness. Go to Step 3
2	1. Turn the key off, connect the EHCU. 2. Erase the trouble code. 3. Turn Ignition off, then on, to perform system self-check. 4. If warning light remains on, display trouble codes once again. Is the check trouble code 14?	Replace EHCU. Go to Step 3	Inspect in accordance with the DTC displayed.
3	1. Reconnect all components and ensure all components are properly mounted. 2. Clear diagnostic trouble code. Was this step finished?	Repeat the “Basic diagnostic flow chart.”	Go to Step 3

Downloaded from www.Manualslib.com manuals search engine

Chart B-3 Power Voltage Drop (DTC 15)

Step	Action	Yes	No
1	Is the battery voltage normal? (Battery capacity check)	Go to Step 2	Charge or replace battery. Go to Step 2
2	1. Turn the key off. 2. Disconnect EHCU connector. 3. Turn the key on. Is the voltage between EHCU connector terminals 8 and 15, higher than 10V?	Check harness connector for suspected disconnection. Fault found: Repair, and perform system self-check. No fault found: replace EHCU. Go to Step 3	Repair harness or connector. Go to Step 3
3	1. Reconnect all components, ensure all components are properly mounted. 2. Clear diagnostic trouble code. Was this step finished?	Repeat the “Basic diagnostic flow chart.”	Go to Step 3

Chart B-4 CLASS-2 Communication Line Abnormality (DTC 16)

Step	Action	Yes	No
1	1. Turn the key off. 2. Disconnect EHCU and PCM connector. Is there continuity between EHCU connector terminals 25 and ground?	Go to Step 2	Repair harness or connector. Go to Step 3
2	1. Connect EHCU connector. 2. Clear diagnostic trouble code. 3. Turn the key on. Is the diagnostic trouble code 16 shown on the displayed?	Check the PCM harness. Refer to 6E section. Go to Step 3	Replace EHCU. Go to Step 3
3	1. Reconnect all components, ensure all components are properly mounted. 2. Clear diagnostic trouble code. Was this step finished?	Repeat the “Basic diagnostic flow chart.”	Go to Step 3

Chart B-5 G-Sensor Circuit (DTC 21)

Step	Action	Yes	No
1	Vehicle placed horizontal. Is the resistance between the G sensor connector terminals 1 and 2 within 4.0-6.0 kΩ?	Check harness connector for short. Fault found : Repair , and perform system self-check. No fault found : replace EHCU. Go to Step 3	Go to Step 2
2	Is the bracket installed horizontally?	Go to Step 4	Repair or replace bracket. Go to Step 4

Downloaded from www.Manualslib.com manuals search engine

Step	Action	Yes	No
3	Remove G sensor. Is the resistance between the G sensor connector terminals 1 and 2 within 1.0-2.0 kΩ when G sensor is horizontal?	Go to Step 4	Replace G sensor. Go to Step 5
4	Measure resistance between G sensor connector terminals 1 and 2 within 4.0-6.0 kΩ when G sensor tilted to 30° or more?	Harness between EHCU and G sensor is faulty and short. Repair the harness Go to Step 5	Replace G sensor. Go to Step 5
5	1. Reconnect all components and ensure all components are properly mounted. 2. Clear diagnostic trouble code. Was this step finished?	Repeat the "Basic diagnostic flow chart."	Go to Step 5

Chart B-6 Abnormal Transmission Input (DTC 23)

Step	Action	Yes	No
1	1. Turn the key off. 2. Disconnect EHCU connector. Is there continuity between EHCU connector terminal 6 to 15 (Gear position-P(A/T), N(M/T))?	Shorted switch harness. Repair switch or harness. Go to Step 6	Go to Step 2
2	Is the vehicle an A/T model?	Go to Step 3	Go to Step 4
3	Turn the key on and measure the voltage between EHCU connector terminal 6 and 15. Is the 6V under when the gear position is L, and R(Battery voltage 12V)?	Go to Step 5	Transmission SW trouble. Disconnected harness. Repair SW and harness. Go to Step 6
4	Turn the key on and measure the voltage between EHCU connector terminal 6 and 15. Is the 9.6V over when the gear position is 1, 2, R(Battery voltage 12V)?	Go to Step 5	Transmission SW trouble. Disconnected harness. Repair SW and harness. Go to Step 6

Downloaded from www.Manualslib.com manuals search engine

Step	Action	Yes	No
5	Is there 6.6 to 9.0V when the gear position is 3, 4, 5 and N(M/T) or 2,3,D,N and P(A/T)(Battery voltage 12V)?	Suspected harness/ connector short power source/GND. Suspected shorted transmission SW. Fault found: repair, and perform system self-check. No fault found: replace EHCU. Go to Step 6	Transmission SW trouble. Disconnected harness. Repair SW and harness. Go to Step 6
6	1. Reconnect all components, ensure all components are properly mounted. 2. Clear diagnostic trouble code. Was this step finished?	Repeat the “Basic diagnostic flow chart.”	Go to Step 6

Chart B-7 Transfer Monitor (DTC 24)

Step	Action	Yes	No
1	1. Turn the key off. 2. Disconnect EHCU connector. Is the EHCU connector terminal 9 line normally?	Go to Step 2	Repair Go to Step 3
2	Is the TOD ECU or 4WD controler normal?	Replace EHCU. Go to Step 3	Repair or replace TOD ECU or 4WD contrder. Go to Step 3
3	1. Reconnect all components, ensure all components are properly mounted. 2. Clear diagnostic trouble code. Was this step finished?	Repeat the “Basic diagnostic flow chart.”	Go to Step 3

Chart B-8 EHCU Pump Motor And Motor Relay Circuit (DTC 32)

Step	Action	Yes	No
1	1. Turn the key off. 2. Disconnect EHCU connector. 3. Measure voltage between EHCU connector terminal 13 and body ground. Is the voltage equal to battery voltage?	Go to Step 2	Repair fuse/harness between battery and EHCU connector terminal 13. Go to Step 3
2	Is there continuity between EHCU connector terminal 12 and ground?	Go to Step 3	Repair between EHCU connector terminal 12 and ground. Go to Step 3
3	1. Reconnect all components and ensure all components are properly mounted. 2. Clear diagnostic trouble code. Was this step finished?	Repeat the “Basic diagnostic flow chart.”	Go to Step 3

Downloaded from www.Manualslib.com manuals search engine

Chart B-9 EHCU Pump Valve And Valve Relay Circuit (DTC 35)

Step	Action	Yes	No
1	1. Turn the key off. 2. Disconnect EHCU connector. 3. Measure voltage between EHCU connector terminal 14 and body ground. Is the voltage equal to battery voltage?	Replace EHCU. Go to Step 2	Repair fuse and harness EHCU connector terminal 14 and battery. Go to Step 2
2	1. Reconnect all components and ensure all components are properly mounted. 2. Clear diagnostic trouble code. Was this step finished?	Repeat the “Basic diagnostic flow chart.”	Go to Step 2

Chart B-10 FL Isolation Solenoid Valve Abnormality (DTC 41)

Step	Action	Yes	No
1	Was the “EHCU Connector Pin–out Checks” perfomed?	Go to Step 2	Go to “EHCU Connector Pin-out Checks”.
2	Is the EHCU connector free from damage or corrosion?	Go to Step 3	Repair the connector. Repeat the “Basic Diagnostic Flow Chart”.
3	1. Replace the EHCU. 2. Reconnect all component, ensure all component are properly mounted. Was this step finished?	Repeat the “Basic Diagnostic Flow Chart”.	Go to Step 3

Chart B-11 FL Dump Solenoid Valve Abnormality (DTC 42)

Step	Action	Yes	No
1	Was the “EHCU Connector Pin–out Checks” perfomed?	Go to Step 2	Go to “EHCU Connector Pin-out Checks”.
2	Is the EHCU connector free from damage or corrosion?	Go to Step 3	Repair the connector. Repeat the “Basic Diagnostic Flow Chart”.
3	1. Replace the EHCU. 2. Reconnect all component, ensure all component are properly mounted. Was this step finished?	Repeat the “Basic Diagnostic Flow Chart”.	Go to Step 3

Downloaded from www.Manualslib.com manuals search engine

Chart B-12 FR Isolation Solenoid Valve Abnormality (DTC 43)

Step	Action	Yes	No
1	Was the “EHCU Connector Pin–out Checks” perfomed?	Go to Step 2	Go to “EHCU Connector Pin-out Checks”.
2	Is the EHCU connector free from damage or corrosion?	Go to Step 3	Repair the connector. Repeat the “Basic Diagnostic Flow Chart”.
3	1. Replace the EHCU. 2. Reconnect all component, ensure all component are properly mounted. Was this step finished?	Repeat the “Basic Diagnostic Flow Chart”.	Go to Step 3

Chart B-13 FR Dump Solenoid Valve Abnormality (DTC 44)

Step	Action	Yes	No
1	Was the “EHCU Connector Pin–out Checks” perfomed?	Go to Step 2	Go to “EHCU Connector Pin-out Checks”.
2	Is the EHCU connector free from damage or corrosion?	Go to Step 3	Repair the connector. Repeat the “Basic Diagnostic Flow Chart”.
3	1. Replace the EHCU. 2. Reconnect all component, ensure all component are properly mounted. Was this step finished?	Repeat the “Basic Diagnostic Flow Chart”.	Go to Step 3

Chart B-14 Rear Isolation Solenoid Valve Abnormality (DTC 45)

Step	Action	Yes	No
1	Was the “EHCU Connector Pin–out Checks” perfomed?	Go to Step 2	Go to “EHCU Connector Pin-out Checks”.
2	Is the EHCU connector free from damage or corrosion?	Go to Step 3	Repair the connector. Repeat the “Basic Diagnostic Flow Chart”.
3	1. Replace the EHCU. 2. Reconnect all component, ensure all component are properly mounted. Was this step finished?	Repeat the “Basic Diagnostic Flow Chart”.	Go to Step 3

Downloaded from www.Manualslib.com manuals search engine

Chart B-15 Rear Dump Solenoid Valve Abnormality (DTC 46)

Step	Action	Yes	No
1	Was the “EHCU Connector Pin–out Checks” perfomed?	Go to Step 2	Go to “EHCU Connector Pin-out Checks”.
2	Is the EHCU connector free from damage or corrosion?	Go to Step 3	Repair the connector. Repeat the “Basic Diagnostic Flow Chart”.
3	1. Replace the EHCU. 2. Reconnect all component, ensure all component are properly mounted. Was this step finished?	Repeat the “Basic Diagnostic Flow Chart”.	Go to Step 3

Chart B-16 FL Speed Sensor Disconnection (DTC 51)

Step	Action	Yes	No
1	1. Turn the key off. 2. Disconnect EHCU connector. 3. Measure the resistance between EHCU connector terminals 20 and 21. Is the resistance between 1.3k and 1.9k ohms?	Check for faults in harness between speed sensor and EHCU. Fault found: Repair, and perform system self-check. No fault found: Replace EHCU. Go to Step 3	Go to Step 2
2	Measure the FL speed sensor resistance at the sensor connector. Is the resistance between 1.3k and 1.9k ohms?	Repair harness abnormality between sensors and EHCU. Go to Step 3	Replace sensor. Go to Step 3
3	1. Reconnect all components, ensure all components are properly mounted. 2. Clear diagnostic trouble code. Was this step finished?	Repeat the “Basic diagnostic flow chart.”	Go to Step 3

Downloaded from www.Manualslib.com manuals search engine

Chart B-17 FR Speed Sensor Disconnection (DTC 52)

Step	Action	Yes	No
1	1. Turn the key off. 2. Disconnect EHCU connector. 3. Measure the resistance between EHCU connector terminals 4 and 5. Is the resistance between 1.3k and 1.9k ohms?	Check for faults in harness between speed sensor and EHCU. Fault found: Repair, and perform system self-check. No fault found: Replace EHCU. Go to Step 3	Go to Step 2
2	Measure the FR speed sensor resistance at the sensor connector. Is the resistance between 1.3k and 1.9k ohms?	Repair harness abnormality between sensors and EHCU. Go to Step 3	Replace sensor. Go to Step 3
3	1. Reconnect all components and ensure all components are properly mounted. 2. Clear diagnostic trouble code. Was this step finished?	Repeat the “Basic diagnostic flow chart.”	Go to Step 3

Chart B-18 RL Speed Sensor Disconnection (DTC 53)

Step	Action	Yes	No
1	1. Turn the key off. 2. Disconnect EHCU connector. 3. Measure the resistance between EHCU connector terminals 22 and 23. Is the resistance between 1.3k and 1.9k ohms?	Check for faults in harness between speed sensor and EHCU. Fault found: Repair, and perform system self-check. No fault found: Replace EHCU. Go to Step 3	Go to Step 2
2	Measure the RL speed sensor resistance at the sensor connector. Is the resistance between 1.3k and 1.9k ohms?	Repair harness abnormality between sensors and EHCU. Go to Step 3	Replace sensor. Go to Step 3
3	1. Reconnect all components and ensure all components are properly mounted. 2. Clear diagnostic trouble code. Was this step finished?	Repeat the “Basic diagnostic flow chart.”	Go to Step 3

Downloaded from www.Manualslib.com manuals search engine

Chart B-19 RR Speed Sensor Disconnection (DTC 54)

Step	Action	Yes	No
1	1. Turn the key off. 2. Disconnect EHCU connector. 3. Measure the resistance between EHCU connector terminals 2 and 3. Is the resistance between 1.3K and 1.9k ohms?	Check for faults in harness between speed sensor and EHCU. Fault found: Repair, and perform system self-check. No fault found: Replace EHCU. Go to Step 3.	Go to Step 2
2	Measure the RR speed sensor resistance at the sensor connector. Is the sensor resistance between 1.3k and 1.9k ohms?	Repair harness abnormality between sensors and EHUC. Go to Step 3	Replace sensor. Go to Step 3
3	1. Reconnect all components and ensure all components are properly mounted. 2. Clear diagnostic trouble code. Was this step finished?	Repeat the “Basic diagnostic flow chart.”	Go to Step 3

Downloaded from www.Manualslib.com manuals search engine

Chart B-20 FL Speed Sensor Short Circuit (DTC 61)

Step	Action	Yes	No
1	1. Turn the key off. 2. Disconnect EHCU connector 3. Measure the FL speed sensor resistance between EHCU connector terminals 20 and 21. Is the resistance between 1.3k and 1.9k ohms?	Go to Step 2	Go to Step 3
2	Is there play in the sensor/sensor rotor?	Go to Step 4	Repair. Go to Step 6
3	Measure the FL speed sensor resistance at the sensor connector. Is the resistance between 1.3k and 1.9k ohms?	Repair harness abnormality between sensors and EHCU. Go to Step 6	Replace sensor. Go to Step 6
4	Damage and powdered iron sticking to sensor/sensor ring?	Go to Step 5	Repair. Go to Step 6
5	Is sensor output normal? (Chart C-2 or TC-2)	Check for faults in harness between speed sensor and EHCU. Fault found: repair, and perform system self-check. No fault found: replace EHCU. Go to Step 6	Replace sensor. Go to Step 6
6	1. Reconnect all components and ensure all components are properly mounted. 2. Clear diagnostic trouble code. Was this step finished?	Repeat the “Basic diagnostic flow chart.”	Go to Step 6

NOTE: Even after repairing the faulty part the warning light (W/L) does not go out if the vehicle is at a stop. Turn the ignition switch to the ON position and drive the vehicle at 12 km/h or higher to make sure that the warning light goes out.

Downloaded from www.Manualslib.com manuals search engine

Chart B-21 FR Speed Sensor Short Circuit (DTC 62)

Step	Action	Yes	No
1	1. Turn the key off. 2. Disconnect EHCU connector. 3. Measure the FR speed sensor resistance between EHCU connector terminals 4 and 5. Is the resistance between 1.3k and 1.9k ohms?	Go to Step 2	Go to Step 3
2	Is there play in the sensor/sensor rotor?	Go to Step 4	Repair. Go to Step 6
3	Measure the FR speed sensor resistance at the sensor connector. Is the resistance between 1.3k and 1.9k ohms?	Repair harness abnormality between sensors and EHCU. Go to Step 6	Replace sensor. Go to Step 6
4	Damage and powdered iron sticking to sensor/sensor ring?	Go to Step 5	Repair. Go to Step 6
5	Is sensor output normal? (Chart C-2 or TC-2)	Check for faults in harness between speed sensor and EHCU. Fault found: repair, and perform system self-check. No fault found: replace EHCU. Go to Step 6	Replace sensor. Go to Step 6
6	1. Reconnect all components and ensure all components are properly mounted. 2. Clear diagnostic trouble code. Was this step finished?	Repeat “Basic diagnostic flow chart.”	Go to Step 6

NOTE: Even after repairing the faulty part the warning light (W/L) does not go out if the vehicle is at a stop. Turn the ignition switch to the ON position and drive the vehicle at 12 km/h or higher to make sure that the warning light goes out.

Downloaded from www.Manualslib.com manuals search engine

Chart B-22 RL Speed Sensor Short Circuit (DTC 63)

Step	Action	Yes	No
1	1. Turn the key off. 2. Disconnect EHCU connector 3. Measure the RL speed sensor resistance between EHCU connector terminals 22 and 23. Is the resistance between 1.3k and 1.9k ohms?	Go to Step 2	Go to Step 3
2	Is there play in the sensor/sensor rotor?	Go to Step 4	Repair. Go to Step 6
3	Measure the RL speed sensor resistance at the sensor connector. Is the resistance between 1.3k and 1.9k ohms?	Repair harness abnormality between sensors and EHCU. Go to Step 6	Replace sensor. Go to Step 6
4	Damage and powdered iron sticking to sensor/sensor ring?	Go to Step 5	Repair. Go to Step 6
5	Is sensor output normal? (Chart C-2 or TC-2)?	Check for faults in harness between speed sensor and EHCU. Fault found: repair, and perform system self-check. No fault found: replace EHCU. Go to Step 6	Replace sensor. Go to Step 6
6	1. Reconnect all components and ensure all components are properly mounted. 2. Clear diagnostic trouble code. Was this step finished?	Repeat the “Basic diagnostic flow chart.”	Go to Step 6

NOTE: Even after repairing the faulty part the warning light (W/L) does not go out if the vehicle is at a stop. Turn the ignition switch to the ON position and drive the vehicle at 12 km/h or higher to make sure that the warning light goes out.

Downloaded from www.Manualslib.com manuals search engine

Chart B-23 RR Speed Sensor Short Circuit (DTC 64)

Step	Action	Yes	No
1	1. Turn the key off. 2. Disconnect EHCU connector. 3. Measure the RR speed sensor resistance between EHCU connector terminals 2 and 3. Is the resistance between 1.3k and 1.9k ohms?	Go to Step 2	Go to Step 3
2	Is there play in the sensor/sensor rotor?	Go to Step 4	Repair. Go to Step 6
3	Measure the RR speed sensor resistance at the sensor connector. Is the resistance between 1.3k and 1.9k ohms?	Repair harness abnormality between sensors and EHCU. Go to Step 6	Replace sensor. Go to Step 6
4	Damage and powdered iron sticking to sensor/sensor ring?	Go to Step 5	Repair. Go to Step 6
5	Is sensor output normal? (Chart C-2 or TC-2)	Check for faults in harness between speed sensor and EHCU. Fault found: repair, and perform system self-check. No fault found: replace EHCU. Go to Step 6	Replace sensor. Go to Step 6
6	1. Reconnect all components and ensure all components are properly mounted. 2. Clear diagnostic trouble code. Was this step finished?	Repeat “Basic diagnostic flow chart.”	Go to Step 6

NOTE: Even after repairing the faulty part the warning light (W/L) does not go out if the vehicle is at a stop. Turn the ignition switch to the ON position and drive the vehicle at 12 km/h or higher to make sure that the warning light goes out.

Downloaded from www.Manualslib.com manuals search engine

Chart B-24 Sensor Signal Input Abnormality (DTC 65)

Step	Action	Yes	No
1	Using TECH 2?	Go to Step 2	Go to Step 3
2	1. Connect TECH 2. 2. Select Snap shot manual trigger. 3. With wheel speed data displayed, run the vehicle when speed has arrived at 30 km/h (18 mph). 4. Check speed data on each wheel (refer to the criterion given below). *1 Is the abnormal sensor condition found?	Replace. Go to Step 8	Go to Step 3 All the sensors should follow the following flowchart (without using TECH 2).
3	Is there play in sensor/sensor ring?	Repair. Go to Step 8	Go to Step 4
4	Is there powdered iron sticking to sensor/sensor ring?	Repair. Go to Step 8	Go to Step 5
5	Is there a broken tooth or indentation in sensor ring?	Replace sensor ring. Go to Step 8	Go to Step 6
6	Is there play in wheel bearing?	Adjust or repair. Go to Step 8	Go to Step 7
7	Is the check wiring between sensor and EHCU normal?	Replace EHCU. Go to Step 8	Repair, and perform system self-check. Go to Step 8
8	1. Reconnect all components, ensure all components are properly mounted. 2. Clear diagnostic trouble code. Was this step finished?	Repeat “Basic diagnostic flow chart.”	Go to Step 8

Sensor Signal Abnormality Criteria using TECH 2

1. While driving, the speed of one or two wheels 25% or more higher than that of the other wheels.
2. The speed of one or two wheels is 10 km/h (6 mph) or more higher than that of the other wheels.
3. During steady driving, wheel speed changes abruptly.

*1 The vehicle must run on a level paved road.

NOTE: Even after repairing the faulty part the warning light (W/L) does not go out if the vehicle is at a stop.

Turn the ignition switch to the ON position and drive the vehicle at 12 km/h or higher to make sure that the warning light goes out.

It is important to verify that the correct tires are installed on vehicle.

Downloaded from www.Manualslib.com manuals search engine

Unit Inspection Procedure

This section describes the following inspection procedures referred to during “SYMPTOM DIAGNOSIS” and “DIAGNOSIS BY ‘ABS’ WARNING LIGHT ILLUMINATION PATTERN” :

	without TECH 2	with TECH 2
Wheel Speed Sensor Output Inspection	Chart C-1-1 to C-1-4	Chart TC-1
Transmission SW Inspection	Chart C-2	Chart TC-2

Chart C-1-1 FL Sensor Output Inspection Procedure

Step	Action	Yes	No
1	1. Turn the key off. 2. Disconnect EHCU connector. 3. Jack up the vehicle, With all four wheels off the ground. Measure the AC voltage between EHCU connector terminals while turning FL wheel at a speed of 1 RPS: Is voltage between EHCU connector terminals 20 and 21 under 200 mV?	Go to Step 2	Ok. Go to Step 3
2	1. Disconnect the wheel speed sensor. 2. Measure resistance between the wheel speed sensor connector terminals 1 and 2. Is resistance between connector (C-13) terminals 1 and 2 within 1.3k - 1.9k ohms?	Connector is faulty, or open or short circuit in harness between wheel speed sensor connector and EHCU. Inspect and correct the connector or harness Go to Step 3	Wheel speed sensor is faulty. Replace the wheel speed sensor. Go to Step 3
3	Reconnect all components and ensure all components are properly mounted. Was this step finished?	Repeat the “Basic diagnostic flow chart.”	Go to Step 3

Downloaded from www.Manualslib.com manuals search engine

Chart C-1-2 FR Sensor Output Inspection Procedure

Step	Action	Yes	No
1	1. Turn the key off. 2. Disconnect EHCU connector. 3. Jack up the vehicle with all four wheels off the ground. Measure the AC voltage between EHCU connector terminals while turning FR wheel at a speed of 1 RPS: Is voltage between EHCU connector terminals 4 and 5 under 200 mV?	Go to Step 2	Ok. Go to Step 3
2	1. Disconnect the wheel speed sensor. 2. Measure resistance between the wheel speed sensor connector terminals 1 and 2. Is resistance between connector (C-41) terminals 1 and 2 within 1.3k - 1.9k ohms?	Connector is faulty, or open or short circuit of harness between wheel speed sensor connector and EHCU. Inspect and correct the connector or harness Go to Step 3	Wheel speed sensor is faulty. Replace the wheel speed sensor. Go to Step 3
3	Reconnect all components and ensure all components are properly mounted. Was this step finished?	Repeat the “Basic diagnostic flow chart.”	Go to Step 3

Chart C-1-3 RL Sensor Output Inspection Procedure

Step	Action	Yes	No
1	1. Turn the key off. 2. Disconnect EHCU connector. 3. Jack up the vehicle with all four wheels off the ground. Measure the AC voltage between EHCU connector terminals while turning RL wheel at a speed of 1 RPS: Is voltage between EHCU connector terminals 22 and 23 under 200 mV?	Go to Step 2	Ok. Go to Step 3
2	1. Disconnect the wheel speed sensor. 2. Measure resistance between the wheel speed sensor connector terminals 1 and 2. Is resistance between connector (F-3) terminals 1 and 2 within 1.3k - 1.9k ohms?	Connector is faulty, or open or short circuit of harness between wheel speed sensor connector and EHCU. Inspect and correct the connector or harness Go to Step 3	Wheel speed sensor is faulty. Replace the wheel speed sensor. Go to Step 3
3	Reconnect all components and ensure all components are properly mounted. Was this step finished?	Repeat the “Basic diagnostic flow chart.”	Go to Step 3

Downloaded from www.Manualslib.com manuals search engine

Chart C-1-4 RR Sensor Output Inspection Procedure

Step	Action	Yes	No
1	1. Turn the key off. 2. Disconnect EHCU connector. 3. Jack up the vehicle with all four wheels off the ground. Measure the AC voltage between EHCU connector terminals while turning RR wheel at a speed of 1 RPS: Is voltage between EHCU connector terminals 2 and 3 under 200 mV?	Go to Step 2	Ok. Go to Step 3
2	1. Disconnect the wheel speed sensor. 2. Measure resistance between the wheel speed sensor connector terminals 1 and 2. Is resistance between connector (F-2) terminals 1 and 2 within 1.3k - 1.9k ohms?	Connector is faulty, or open or short circuit of harness between wheel speed sensor connector and EHCU. Inspect and correct the connector or harness Go to Step 3	Wheel speed sensor is faulty. Replace the wheel speed sensor. Go to Step 3
3	Reconnect all components and ensure all components are properly mounted. Was this step finished?	Repeat the “Basic diagnostic flow chart.”	Go to Step 3

Chart TC-1 Sensor Output Inspection Procedure (Use TECH 2)

Step	Action	Yes	No
1	1. Connect TECH 2. 2. While driving the vehicle, check the wheel speed of each sensor by Data List. Is the vehicle speed value is normal?	Go to Step 6	Go to Step 2
2	Check the sensor harness for suspected disconnection (Check while shaking harness/connector). Is the sensor harness connection normal?	Replace speed sensor. Go to Step 3	Repair. Go to Step 6
3	While driving the vehicle, check the wheel speed of each sensor by Data List. Is the vehicle speed value is normal?	Go to Step 6	Go to Step 4
4	Check sensor roter. Is the sensor roter normal?	Go to Step 6	Replace sensor roter. Go to Step 5
5	While driving the vehicle, check the wheel speed of each sensor by Data List. Is the vehicle speed value is normal?	Go to Step 6	Repair harness or connector between EHCU and speed sensor. Go to Step 6
6	Reconnect all components, ensure all components are properly mounted. Was this step finished?	Repeat the “Basic diagnostic flow chart.”	Go to Step 6

Downloaded from www.Manualslib.com manuals search engine

Chart C-2 Transmission Input Inspection Procedure

Step	Action	Yes	No
1	1. Turn the key off. 2. Disconnect EHCU connector. Is there continuity between EHCU connector terminals 6 and 15 (Gear position-P(A/T), N(M/T))?	Shorted switch harness. Repair switch or harness. Go to Step 6	Go to Step 2
2	Is the vehicle an A/T model?	Go to Step 3	Go to Step 4
3	Turn the key on and measure voltage between EHCU connector terminals 6 and 15. Is there less than 6V when the gear position is L, and R(Battery voltage 12V)?	Go to Step 5	Transmission SW trouble. Disconnected harness. Repair SW and harness. Go to Step 6
4	Turn the key on and measure the voltage between EHCU connector terminal 6 and 15. Is there more than 9.6V when the gear position is 1, 2, R(Battery voltage 12V)?	Go to Step 5	Transmission SW trouble. Disconnected harness. Repair SW and harness. Go to Step 6
5	Measure the voltage between EHCU connector terminals 6 and 15. Is there 6.6 to 9.0V when the gear position is 3, 4, 5 and N(M/T) or 2,3,D,N and P(A/T)(Battery voltage 12V)?	Go to Step 6	Transmission SW trouble. Disconnected harness. Repair SW and harness. Go to Step 6
6	1. Reconnect all components and ensure all components are properly mounted. 2. Clear diagnostic trouble code. Was this step finished?	Repeat the “Basic diagnostic flow chart.”	Go to Step 6

Downloaded from www.Manualslib.com manuals search engine

Chart TC-2 Transmission Input Inspection Procedure (Use TECH 2)

Step	Action	Yes	No
1	1. Connect TECH 2. 2. Select Data List. Is this vehicle an A/T model ?	Go to Step 2	Go to Step 4
2	Is “Off–Road Switch(Transmission Input): Active” when the shift lever is the L and R?	Go to Step 3	Go to Step 6
3	Is “Off–Road Switch(Transmission Input): Inactive” when the shift lever is other than the L and R?	Go to Step 7	Go to Step 6
4	Is “Off–Road Switch(Transmission Input): Active” when the shift lever is in 1, 2 and R?	Go to Step 5	Go to Step 6
5	Is “Off–Road Switch(Transmission Input): Inactive” when the shift lever is other than the 1, 2 and R?	Go to Step 7	Go to Step 6
6	1. Abnormal T/M SW, inhibitor SW, or harness. 2. Repair T/M SW, inhibitor SW, or harness. Is the T/M SW, inhibitor SW, or harness repaired?	Go to Step 7	Go to Step 6
7	Reconnect all components, ensure all components are properly mounted. Was this step finished?	Repeat the “Basic diagnostic flow chart.”	Go to Step 7

Downloaded from www.Manualslib.com manuals search engine

Special Tools

ILLUSTRATION	**TOOL NO.** TOOL NAME
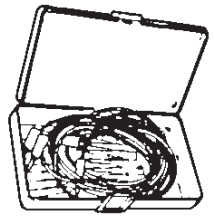	**J–35616** Connector test adapter kit
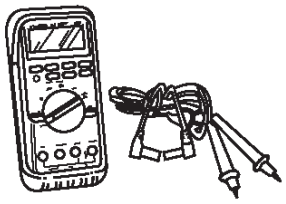	**J–39200** High impedance multimeter
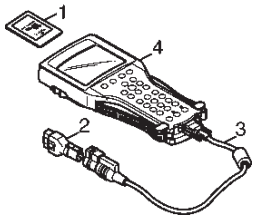	**7000086–ISU** Tech 2 Set (1) PCMCIA Card (2) SAE 16/19 Adapter (3) DLC Cable (4) Tech 2

Downloaded from www.Manualslib.com manuals search engine

TROOPER

BRAKES

ANTI-LOCK BRAKE SYSTEM

CONTENTS

Service Precaution 5B–1
Electronic Hydraulic Control Unit 5B–2
Electronic Hydraulic Control Unit and Associated Parts 5B–2
Removal 5B–2
Installation 5B–2
G-Sensor 5B–3
Removal 5B–3
Inspection and Repair 5B–3
Installation 5B–3
Front Wheel Speed Sensor 5B–4
Front Wheel Speed Sensor and Associated Parts 5B–4
Removal 5B–4
Inspection and Repair 5B–5
Installation 5B–5
Rear Wheel Speed Sensor 5B–6
Rear Wheel Speed Sensor and Associated Parts 5B–6
Removal 5B–6
Inspection and Repair 5B–6
Installation 5B–6

Service Precaution

WARNING: THIS VEHICLE HAS A SUPPLEMENTAL RESTRAINT SYSTEM (SRS). REFER TO THE SRS COMPONENT AND WIRING LOCATION VIEW IN ORDER TO DETERMINE WHETHER YOU ARE PERFORMING SERVICE ON OR NEAR THE SRS COMPONENTS OR THE SRS WIRING. WHEN YOU ARE PERFORMING SERVICE ON OR NEAR THE SRS COMPONENTS OR THE SRS WIRING, REFER TO THE SRS SERVICE INFORMATION. FAILURE TO FOLLOW WARNINGS COULD RESULT IN POSSIBLE AIR BAG DEPLOYMENT, PERSONAL INJURY, OR OTHERWISE UNNEEDED SRS SYSTEM REPAIRS.

CAUTION: Always use the correct fastener in the proper location. When you replace a fastener, use ONLY the exact part number for that application. ISUZU will call out those fasteners that require a replacement after removal. ISUZU will also call out the fasteners that require thread lockers or thread sealant. UNLESS OTHERWISE SPECIFIED, do not use supplemental coatings (Paints, greases, or other corrosion inhibitors) on threaded fasteners or fastener joint interfaces. Generally, such coatings adversely affect the fastener torque and the joint clamping force, and may damage the fastener. When you install fasteners, use the correct tightening sequence and specifications. Following these instructions can help you avoid damage to parts and systems.

Downloaded from www.Manualslib.com manuals search engine

Electronic Hydraulic Control Unit

Electronic Hydraulic Control Unit and Associated Parts

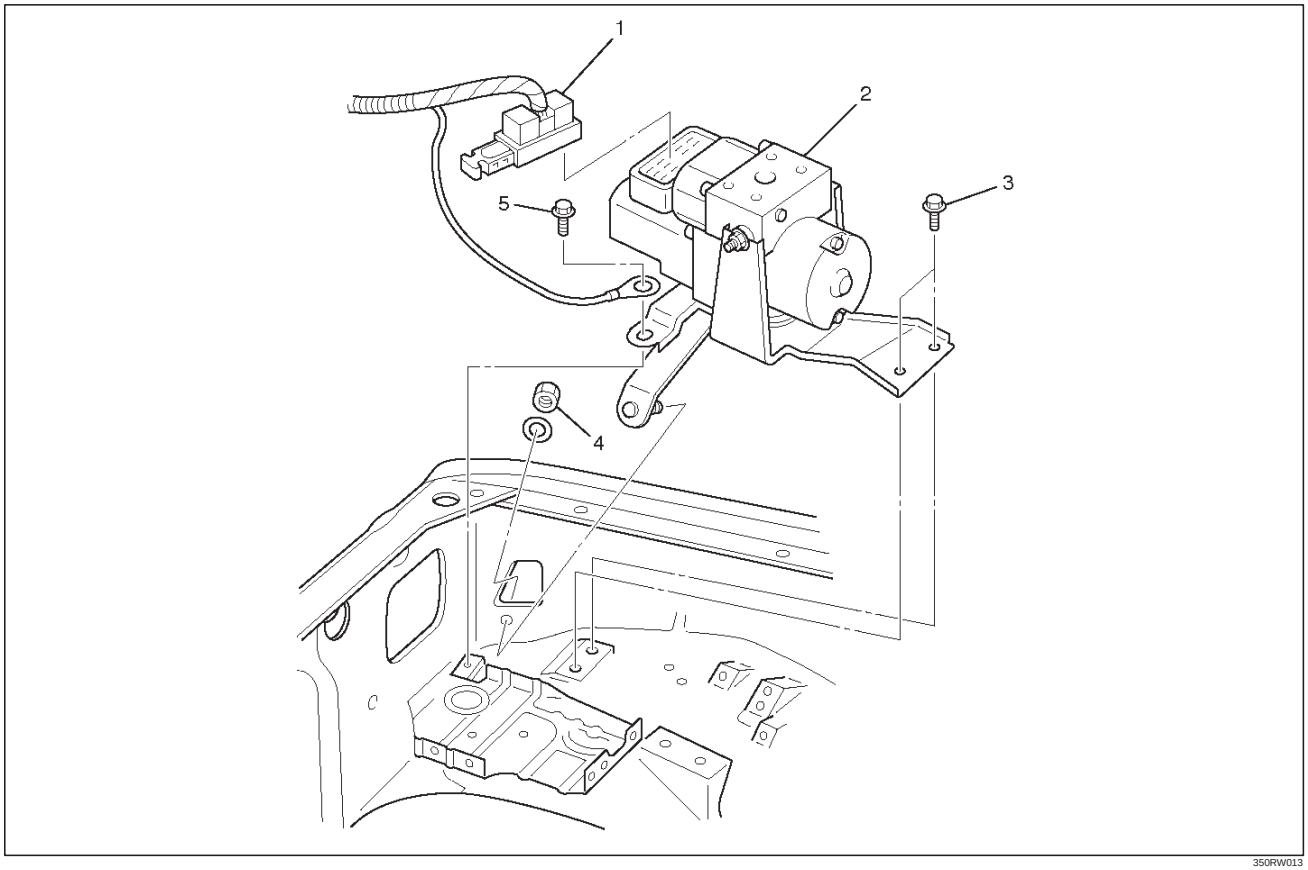

Legend

(1) Connector
(2) Hydraulic Unit ASM
(3) Bolts
(4) Nut
(5) Bolt

Removal

1. Remove battery ASM.
2. Remove harness connector.
3. Remove EHCU fixing nuts.
4. Remove brake pipes.
   - After disconnecting brake pipe, cap or tape the openings of the brake pipe to prevent the entry of foreign matter.
5. Remove hydraulic unit fixing nuts.

Installation

To install, follow the removal steps in the reverse order, noting the following points:

Torque

Hydraulic unit fixing nuts : 22 N·m (16 lb ft)

Ground cable : 14 N·m (10 lb ft)

Brake pipe (joint bolts) : 16 N·m (12 lb ft)

- After installing the hydraulic unit, bleed brakes completely. See Section 5A “Hydraulic Brakes”.

Downloaded from www.Manualslib.com manuals search engine

G-Sensor

Removal

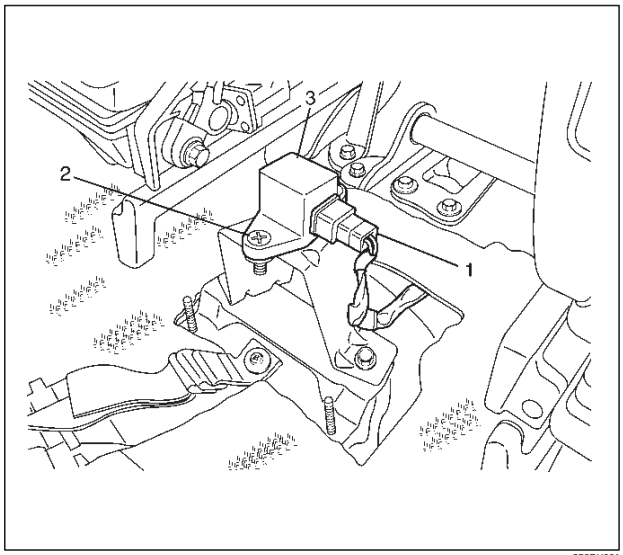

350RX001

1. Remove center console.
   - Refer to Consoles in Body and Accessories section.
2. Remove clip from G-sensor connector, then disconnect connector.
3. Remove G-sensor assembly fixing bolt (2).
4. Remove G-sensor assembly (3).

Inspection and Repair

Refer to “Chart B-5” in this Section.

Installation

1. Install G-sensor assembly (3).
   - Care should be taken so that the G-sensor is not installed in the wrong direction.
2. Install G-sensor assembly fixing bolt (2).
   - Tighten the fixing bolt to the specified torque.

Torque : 10 N·m (87 lb in)

3. Install G-sensor wiring connector (1).
4. Install center console.
   - Refer to Consoles in Body and Accessories section.

Downloaded from www.Manualslib.com manuals search engine

Front Wheel Speed Sensor

Front Wheel Speed Sensor and Associated Parts

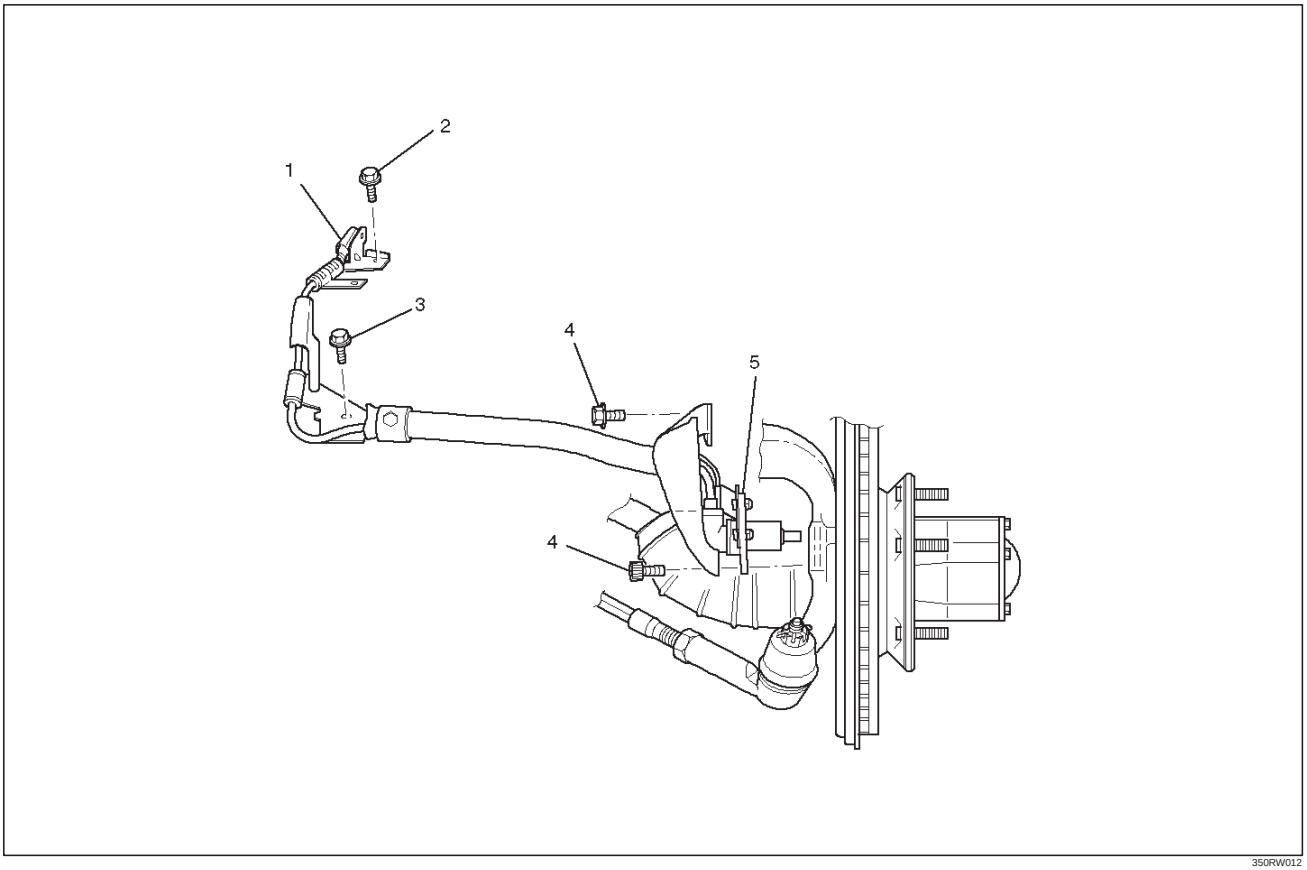

350RW012

Legend

(1) Speed Sensor Connector
(2) Sensor Cable Fixing Bolt (Upper side)
(3) Sensor Cable Fixing Bolt (Lower side)
(4) Sensor Cable Fixing Bolt (Sensor side)
(5) Speed Sensor

Removal

1. Remove speed sensor connector.
2. Remove sensor cable fixing bolt (Upper side).
3. Remove sensor cable fixing bolt (Lower side).
4. Remove the speed sensor cable fixing bolts (1) and caliper fixing bolt (2) from caliper side speed sensor cable bracket (3).

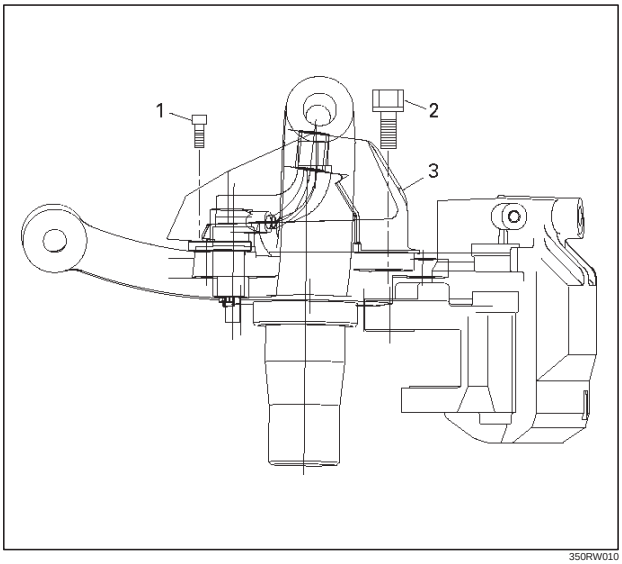

350RW010

5. Remove speed sensor.

Downloaded from www.Manualslib.com manuals search engine

Inspection and Repair

1. Check the speed sensor pole piece for presence of foreign materials; remove any dirt, etc.
2. Check the pole piece for damage; replace speed sensor if necessary.
3. Check the speed sensor cable for short or open circuit, and replace with a new one if necessary.
   To check for cable short or open, bend or stretch the cable while checking for continuity.
4. Check the sensor ring for damage including tooth chipping, and if damaged, replace the sensor ring assembly. Refer to removal of the sensor ring in Section 4C “Front hub and disc”.

Installation

1. Install speed sensor and take care not to hit the speed sensor pole piece during installation.
2. Install speed sensor fixing bolt and tighten the fixing bolt to the specified torque.

   Torque

   Sensor side : 8 N·m (69 lb in)

   Caliper side : 155 N·m (115 lb ft)

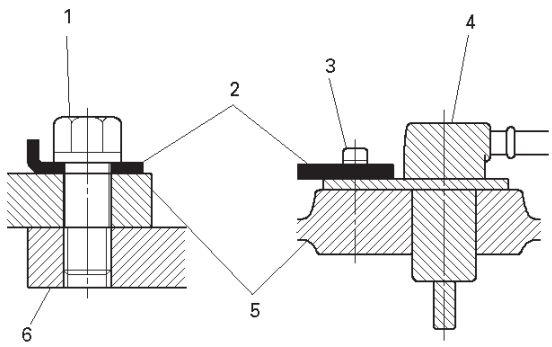

350RW011

Legend

(1) Caliper Fixing Bolt
(2) Bracket
(3) Sensor Fixing Bolt
(4) Sensor
(5) Knuckle
(6) Brake Caliper

3. Install speed sensor cable fixing bolt (Lower side) and tighten the fixing bolt to the specified torque.

   Torque : 24 N·m (18 lb ft)

4. Install speed sensor cable fixing bolt (Upper side) and tighten the fixing bolt to the specified torque.

   Torque : 6 N·m (52 lb ft)

NOTE: Confirm that a white line marked on the cable is not twisted when connecting the speed sensor cable.

5. Install speed sensor connector.

Downloaded from www.Manualslib.com manuals search engine

Rear Wheel Speed Sensor

Rear Wheel Speed Sensor and Associated Parts

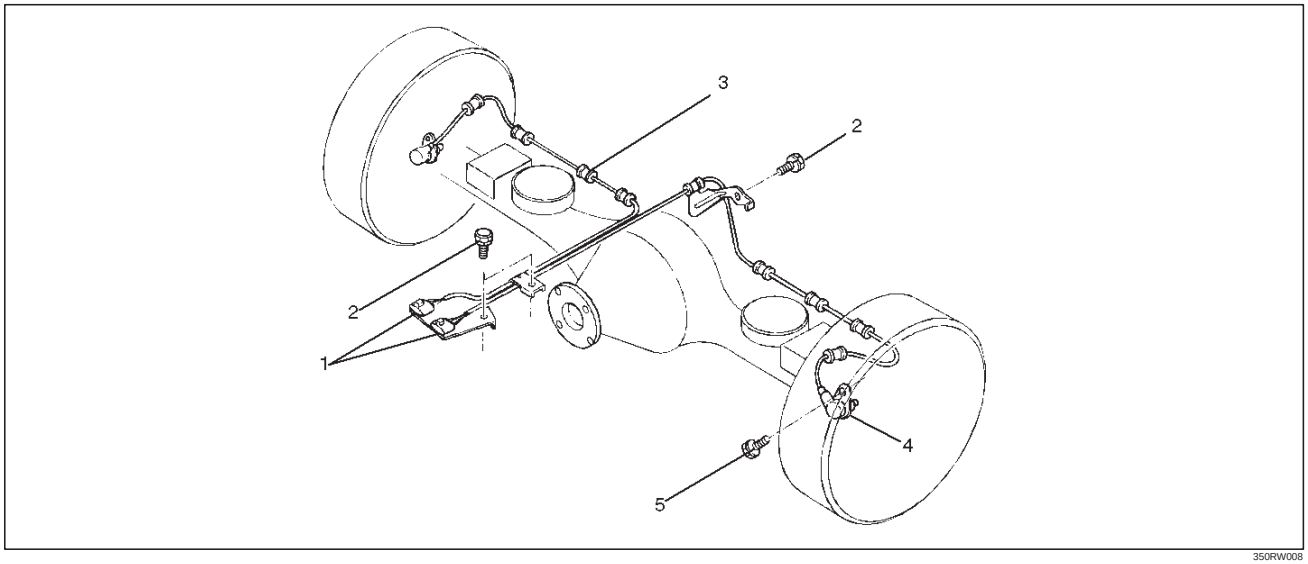

350RW008

Legend

(1) Speed Sensor Connector
(2) Sensor Cable Fixing Bolt
(3) Clip (11 pieces)
(4) Speed Sensor
(5) Sensor Fixing Bolt

Removal

1. Remove speed sensor connector.
2. Remove clip.
3. Remove sensor cable fixing bolt.
4. Remove sensor fixing bolt.
5. Remove speed sensor.

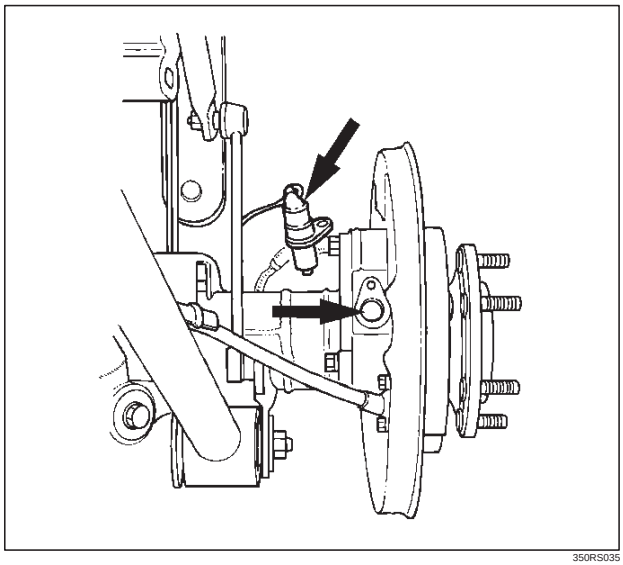

350RS035

Inspection and Repair

1. Check the speed sensor pole piece for presence of foreign materials; remove any dirt, etc.
2. Check the pole piece for damage, and replace the speed sensor if necessary.
3. Check the speed sensor cable for a short or an open, and replace with a new one if necessary. To check for cable short or open, bend or stretch the cable while checking for continuity.
4. Check the sensor ring for damage including tooth chipping. If damaged replace the axle shaft assembly. Refer to removal of the sensor ring in Section 4B “Rear Axle”.

Installation

1. Install the speed sensor and take care not to hit the speed sensor pole piece during installation.
2. Install the sensor fixing bolt and tighten it to the specified torque.

   Torque : 18 N·m (13 lb ft)

3. Install the sensor cable fixing bolt and tighten it to the specified torque.

   Torque : 24 N·m (18 lb ft)

NOTE: Confirm that the cable is not twisted when connecting the speed sensor cable.

4. Install clip.
5. Install speed sensor connector.

Downloaded from www.Manualslib.com manuals search engine

TROOPER

BRAKES

POWER-ASSISTED BRAKE SYSTEM

CONTENTS

Service Precaution 5C–2
General Description 5C–2
Diagnosis 5C–5
General Diagnosis 5C–6
Hydraulic Brakes 5C–9
Filling Master Cylinder Reservoir 5C–9
Deterioration of Brake Fluid 5C–9
Leakage of Brake Fluid 5C–9
Bleeding Brake Hydraulic System 5C–9
Flushing Brake Hydraulic System 5C–10
Brake Pipes and Hoses 5C–10
Brake Hose Inspection 5C–10
Front / Rear Caliper Brake Hose 5C–11
Front / Rear Caliper Brake Hose and Associated Parts 5C–11
Removal 5C–11
Installation 5C–11
Rear Axle Brake Hose 5C–12
Rear Axle Brake Hose and Associated Parts 5C–12
Removal 5C–12
Installation 5C–12
Brake Pipe 5C–13
Removal 5C–13
Installation 5C–13
P & B (Proportioning and Bypass) Valve 5C–14
Removal 5C–14
Installation 5C–14
Main Data and Specifications 5C–15
Brake Pedal 5C–16
Checking Pedal Height 5C–16
Checking Pedal Travel 5C–16
Brake Pedal and Associated Parts 5C–17
Removal 5C–17
Installation 5C–17
Stoplight Switch 5C–18
Removal 5C–18
Installation 5C–18
Main Data and Specifications 5C–19
Fluid Reservoir Tank 5C–20
Fluid Reservoir Tank and Associated Parts 5C–20
Removal 5C–20
Installation 5C–20
Master Cylinder Assembly 5C–21
Master Cylinder Assembly and Associated Parts 5C–21
Removal 5C–21
Inspection and Repair 5C–21
Installation 5C–22
Main Data and Specifications 5C–23
Special Tools 5C–24
Vacuum Booster Assembly 5C–25
Vacuum Booster Assembly and Associated Parts 5C–25
Removal 5C–25
Inspection and Repair 5C–25
Installation 5C–26
Exterior Components 5C–28
Exterior Components and Associated Parts 5C–28
Removal 5C–28
Inspection and Repair 5C–29
Installation 5C–29
Vacuum Booster Overhaul 5C–29
Vacuum Booster 5C–29
Main Data and Specifications 5C–30
Special Tools 5C–31
Front Disc Brake Pads 5C–32
Front Disc Brake Pads Inspection 5C–32
Front Disc Brake Pads and Associated Parts 5C–32
Removal 5C–33
Installation 5C–33
Front Disc Brake Rotor 5C–35
Inspection 5C–35
Replacing Brake Rotors 5C–35
Refinishing Brake Rotors 5C–35
Front Disc Brake Caliper Assembly 5C–37
Front Disc Brake Caliper Assembly and Associated Parts 5C–37
Removal 5C–37
Installation 5C–38
Front Disc Brake Caliper 5C–40
Front Disc Brake Caliper Disassembled View 5C–40
Disassembly 5C–40
Inspection and Repair 5C–41
Reassembly 5C–41
Main Data and Specifications 5C–43

Downloaded from www.Manualslib.com manuals search engine

Rear Disc Brake Pads 5C–44
Brake Pads Inspection 5C–44
Brake Pads and Associated Parts 5C–44
Removal 5C–45
Installation 5C–45
Rear Disc Brake Rotor 5C–47
Inspection 5C–47
Replacing Brake Rotors 5C–47
Refinishing Brake Rotors 5C–47
Rear Drum (In Disc) Inside Diameter Check 5C–48
Rear Disc Brake Caliper Assembly 5C–49
Rear Disc Brake Caliper Assembly and Associated Parts 5C–49
Removal 5C–49
Installation 5C–50
Rear Disc Brake Caliper 5C–52
Rear Disc Brake Caliper Disassembled View 5C–52
Disassembly 5C–52
Inspection and Repair 5C–53
Reassembly 5C–53
Main Data and Specifications 5C–55

Service Precaution

WARNING: THIS VEHICLE HAS A SUPPLEMENTAL RESTRAINT SYSTEM (SRS). REFER TO THE SRS COMPONENT AND WIRING LOCATION VIEW IN ORDER TO DETERMINE WHETHER YOU ARE PERFORMING SERVICE ON OR NEAR THE SRS COMPONENTS OR THE SRS WIRING. WHEN YOU ARE PERFORMING SERVICE ON OR NEAR THE SRS COMPONENTS OR THE SRS WIRING, REFER TO THE SRS SERVICE INFORMATION. FAILURE TO FOLLOW WARNINGS COULD RESULT IN POSSIBLE AIR BAG DEPLOYMENT, PERSONAL INJURY, OR OTHERWISE UNNEEDED SRS SYSTEM REPAIRS.

CAUTION: Always use the correct fastener in the proper location. When you replace a fastener, use ONLY the exact part number for that application. ISUZU will call out those fasteners that require a replacement after removal. ISUZU will also call out the fasteners that require thread lockers or thread sealant. UNLESS OTHERWISE SPECIFIED, do not use supplemental coatings (Paints, greases, or other corrosion inhibitors) on threaded fasteners or fastener joint interfaces. Generally, such coatings adversely affect the fastener torque and the joint clamping force, and may damage the fastener. When you install fasteners, use the correct tightening sequence and specifications. Following these instructions can help you avoid damage to parts and systems.

General Description

Master Cylinder Assembly

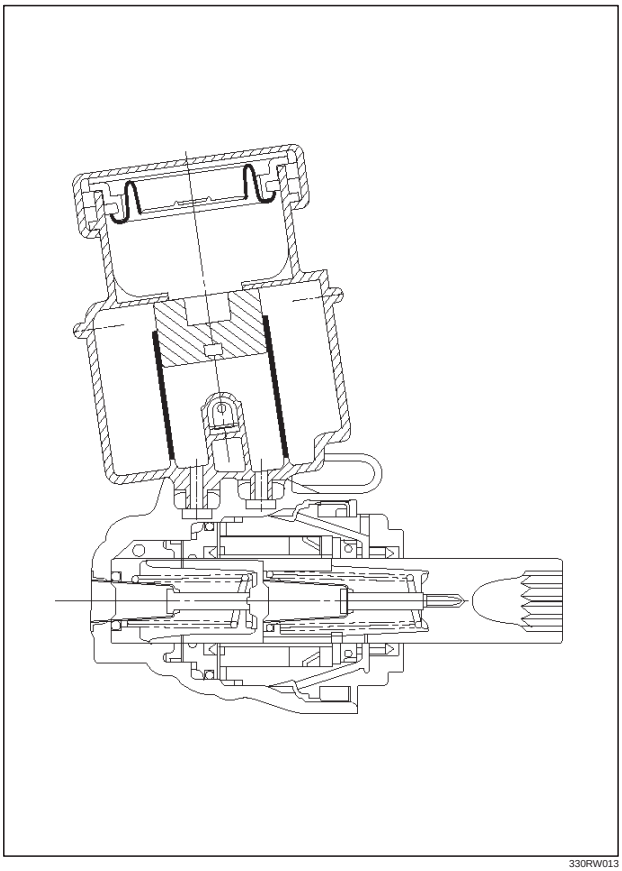

The master cylinder contains two pistons that supply the hydraulic pressure for a dual–circuit braking system. The primary piston provides the fluid pressure to the front brakes, while the secondary piston provides the fluid pressure to the rear brakes. If the pressure is lost from either system, the remaining system will function to stop the vehicle.

Downloaded from www.Manualslib.com manuals search engine

CAUTION:

1. **The master cylinder is not repairable. If found defective, it must be replaced as a complete assembly.**
2. **If any hydraulic component is removed or disconnected, it may be necessary to bleed all or part of the brake system. (Refer to "On–Vehicle Service" in this section.)**
3. **The torque values specified are for dry, un-lubricated fasteners.**
4. **Perform service operations on a clean bench free from all mineral oil materials.**

Brake Booster

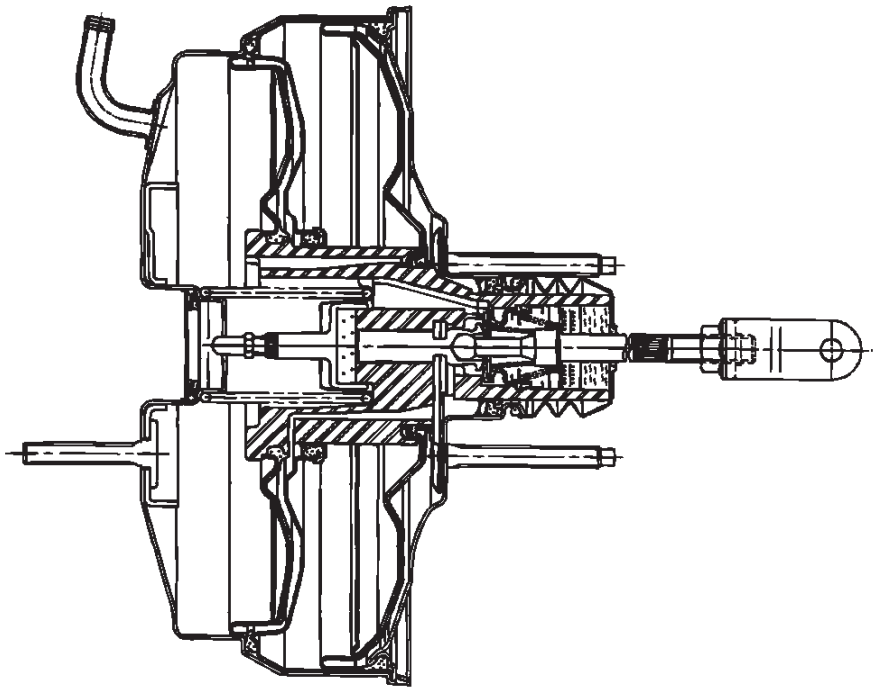

331RS001

This booster is a tandem vacuum unit with a diaphragm effective diameter 205mm + 230mm. In normal operating mode, with the service brakes in the released position, the tandem vacuum booster operates with vacuum on both sides of its diaphragms. When the brakes are applied, air at atmospheric pressure is admitted to one side of each diaphragm to provide the power assist. When the service brake is released, the atmospheric air is shut off from the one side of each diaphragm. The air is then drawn from the booster through the vacuum check valve to the vacuum source.

CAUTION:

1. **If any hydraulic component is removed or disconnected, it may be necessary to bleed all or part of the brake system.**
2. **The torque values specified are for dry, unlubricated fasteners.**
3. **The vacuum booster is not repairable and must be replaced as a complete assembly.**

Disc Brake

The disc brake assembly consists of a caliper, piston, rotor, pad assembly and support bracket. The caliper assembly has a single bore and is mounted to the support bracket with two mounting bolts. The support bracket allows the caliper to move laterally against the rotor. The caliper is a one–piece casting with the inboard side containing the piston bore. A square cut rubber seal is located in a groove in the piston bore which provides the hydraulic seal between the piston and the cylinder wall.

NOTE:

1. Replace all components included in repair kits used to service this caliper.
2. Lubricate rubber parts with clean brake fluid to ease assembly.
3. If any hydraulic component is removed or disconnected, it may be necessary to bleed all or part of the brake system.
4. Replace pads in axle sets only.

Downloaded from www.Manualslib.com manuals search engine

5. The torque values specified are for dry, unlubricated fasteners.
6. Perform the service operation on a clean bench free from all mineral oil materials.

Operation

Front Disc Brake

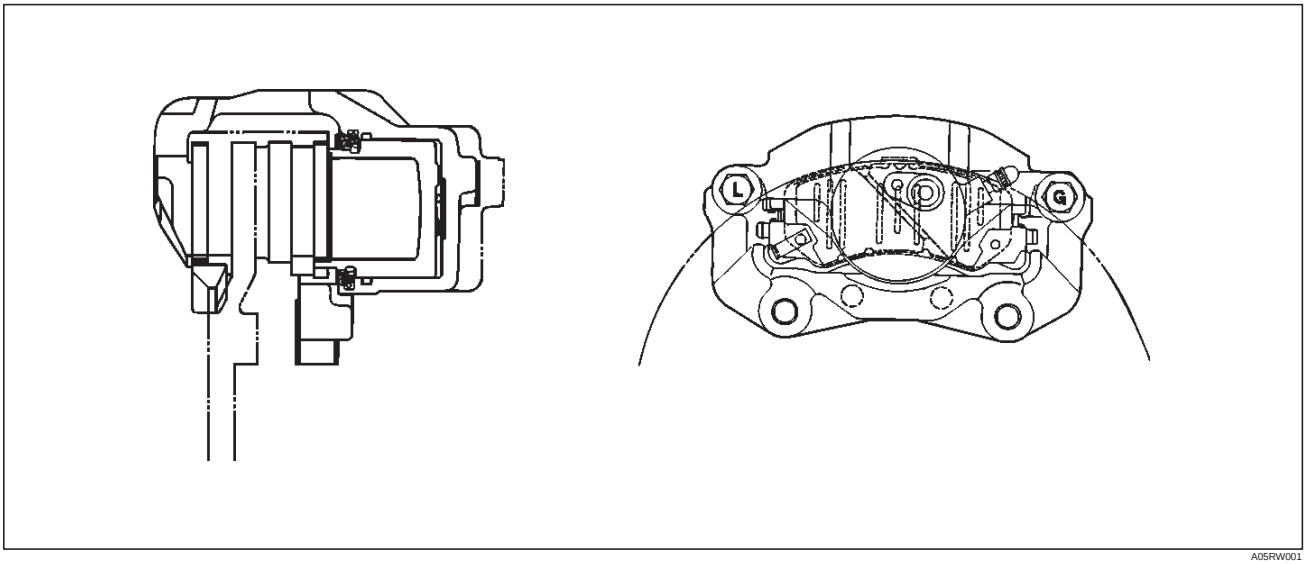

A05RW001

Rear Disc Brake

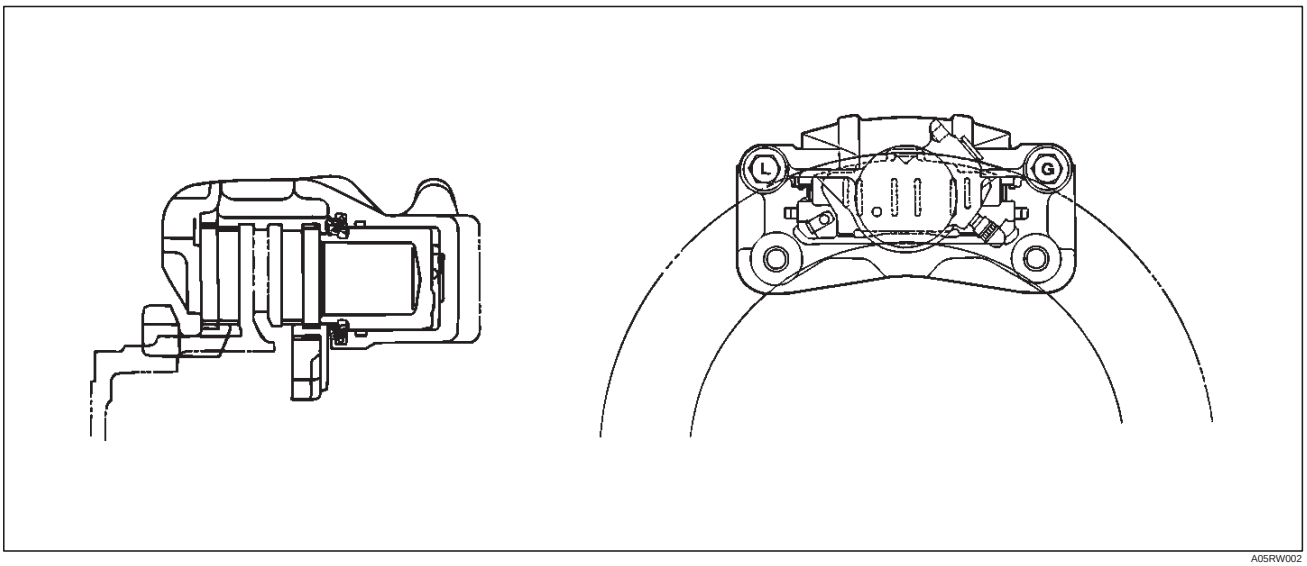

A05RW002

Hydraulic pressure, created by applying the brake pedal, is converted by the caliper to a stopping force. This force acts equally against the piston and the bottom of the caliper bore to move the piston outward and to move (slide) the caliper inward resulting in a clamping action on the rotor. This clamping action forces the linings against the rotor, creating friction to stop the vehicle.

Downloaded from www.Manualslib.com manuals search engine

Diagnosis

Road Testing The Brakes

Brake Test

Brakes should be tested on a dry, clean, reasonably smooth and level roadway. A true test of brake performance cannot be made if the roadway is wet, greasy or covered with loose dirt so that all tires do not grip the road equally. Testing will also be adversely affected if the roadway is crowned so as to throw the weight of the vehicle toward wheels on one side or if the roadway is so rough that wheels tend to bounce. Test the brakes at different vehicle speeds with both light and heavy pedal pressure; however, avoid locking the wheels and sliding the tires. Locked wheels and sliding tires do not indicate brake efficiency, since heavily braked but turning wheels will stop the vehicle in less distance than locked wheels. More tire–to–road friction is present with a heavily braked turning tire then with a sliding tire.

The standard brake system is designed and balanced to avoid locking the wheels except at very high deceleration levels.

It is designed this way because the shortest stopping distance and best control is achieved without brake lock–up.

Because of high deceleration capability, a firmer pedal may be felt at higher deceleration levels.

External Conditions That Affect Brake Performance

1. Tires: Tires having unequal contact and grip on the road will cause unequal braking. Tires must be equally inflated, identical in size, and the thread pattern of right and left tires must be approximately equal.
2. Vehicle Loading: A heavily loaded vehicle requires more braking effort.
3. Wheel Alignment: Misalignment of the wheels, particularly in regard to excessive camber and caster, will cause the brakes to pull to one side.

Brake Fluid Leaks

With engine running at idle and the transmission in “Neutral”, depress the brake pedal and hold a constant foot pressure on the pedal. If pedal gradually falls away with the constant pressure, the hydraulic system may be leaking.

Check the master cylinder fluid level. While a slight drop in the reservoir level will result from normal lining wear, an abnormally low level in reservoir indicates a leak in the system. The hydraulic system may be leaking internally as well as externally. Refer to “Master Cylinder Inspection”. Also, the system may appear to pass this test but still have slight leakage. If fluid level is normal, check the vacuum booster push rod length. If an incorrect length push rod is found, adjust or replace the push rod. Check the brake pedal travel and the parking brake adjustment. When checking the fluid level, the master cylinder fluid level may be low from the “MAX” mark if the front and rear linings are worn. This is not abnormal.

Warning Light Operation

When the ignition switch is in the START position, the “BRAKE” warning light should turn on and go off when the ignition switch returns to the ON position.

The following conditions will turn on the “BRAKE” light:

1. Parking brake applied. The light should be on whenever the parking brake is applied and the ignition switch is on.
2. Low fluid level. A low fluid level in the master cylinder will turn the “BRAKE” light on.
3. During engine cranking the “BRAKE” light should remain on. This notifies the driver that the warning circuit is operating properly.

Downloaded from www.Manualslib.com manuals search engine

General Diagnosis

Condition	Possible cause	Correction
Brake Pull	Tire inflation pressure is unequal.	Adjust
	Front wheel alignment is incorrect.	Adjust
	Unmatched tires on same axle.	Tires with approx. the same amount of tread should be used on the same axle.
	Restricted brake pipes or hoses.	Check for soft hoses and damaged lines. Replace with new hoses and new double“walled steel brake piping.
	Water or oil on the brake pads.	Clean or replace.
	Brake pads hardened.	Replace
	Brake pads worn excessively.	Replace
	Brake rotor worn or scored.	Grind or replace.
	Disc brake caliper malfunctioning.	Clean or replace.
	Front hub bearing preload incorrect.	Adjust or replace.
	Loose suspension parts.	Check all suspension mountings.
	Loose calipers.	Check and tighten the bolts to specifications.
Brake Roughness or Chatter (Pulsates)	Excessive lateral runout.	Check per instructions. If not within specifications, replace or machine the rotor.
	Parallelism not within specifications.	Check per instructions. If not within specifications, replace or machine the rotor.
	Wheel bearings not adjusted.	Adjust wheel bearings to correct specifications
	Pad reversed (steel against iron).	Replace the brake pad and machine rotor to within specifications.
Excessive Pedal Effort	Malfunctioning vacuum booster.	Check the vacuum booster operation and repair, if necessary.
	Partial system failure.	Check the front and rear brake system for failure and repair. Also, check the brake warning light. If a failed system is found, the light should indicate failure.
	Excessively worn pad.	Check and replace pads in sets.
	Piston in caliper stuck or sluggish.	Remove caliper and rebuild.
	Fading brakes due to incorrect pad.	Remove and replace with original equipment pad or equivalent.
	Vacuum leak to vacuum booster.	Check for ruptured or loose hose.
	Check the direction of check valve within vacuum hose.	Correct vacuum hose direction.
	Grease on the brake pads.	Replace or clean.

Downloaded from www.Manualslib.com manuals search engine

Condition	Possible cause	Correction
Excessive Brake Pedal Travel	Air in hydraulic circuit.	Bleed the hydraulic circuit.
	Level of brake fluid in the reservoir too low.	Replenish brake fluid reservoir to specified level and bleed hydraulic circuit as necessary.
	Master cylinder push rod clearance excessive.	Adjust
	Leakage in hydraulic system.	Correct or replace defective parts.
Brake Drag	Master cylinder pistons not returning correctly.	Adjust the stop light switch and vacuum booster push rod. If necessary, rebuild.
	Restricted brake pipes or hoses.	Check for soft hoses or damaged pipes, and replace with new hoses and new double–walled steel brake piping.
	Parking brake misadjusted.	Adjust
	Parking brake lining clearance insufficient.	Adjust
	Brake pedal free play insufficient.	Adjust the brake pedal height or power cylinder operating rod.
	Piston in the master cylinder sticking.	Replace
	Piston in the disc brake caliper sticking.	Replace piston seals.
	Brake pads sticking in caliper.	Clean
	Return spring weakened.	Replace
	Parking brake binding.	Overhaul the parking brakes and correct.
	Front hub bearing preload incorrect.	Adjust or replace.
	Parking brake shoes not returning.	Correct or replace the brake back plate and brake shoe as necessary.
	Obstructions in hydraulic circuit.	Clean
	Brake disc warped excessively.	Grind or replace.
	Rear brake drum distorted.	Grind or replace.
	Parking cable sticking.	Grind or replace.
Grabbing or Uneven Braking Action (All conditions listed under “Pulls”)	Malfunctioning vacuum booster.	Check operation and correct as necessary.
	Binding brake pedal mechanism.	Check and lubricate, if necessary.
	Corroded caliper assembly.	Clean and lubricate.
Brake Noisy	Brake pads are worn.	Replace
	Brake pads are hardened.	Replace
	Brake pads are in poor contact with rotor.	Correct
	Brake disc(s) warped, worn or damaged.	Grind or replace.
	Disc brake anti–squeak shims fatigued.	Replace
	Front hub bearings are loose or preload is incorrect.	Adjust or replace.
	Brake disc is rusted.	Grind or replace.

Downloaded from www.Manualslib.com manuals search engine

Condition	Possible cause	Correction
Poor Brake Action	Master cylinder faulty.	Correct or replace.
	Vacuum booster faulty.	Correct or replace.
	Level of brake fluid in reservoir too low.	Replenish and bleed.
	Air in hydraulic circuit.	Bleed
	Disc brake caliper faulty.	Clean or replace.
	Water or oil on brake pads.	Clean or replace.
	Brake pads in poor contact with the brake disc.	Correct
	Brake pads worn.	Replace
	Brake disc rusted.	Grind or replace.
	Check valve in vacuum hose faulty.	Correct or replace.

Downloaded from www.Manualslib.com manuals search engine

Hydraulic Brakes

Filling Master Cylinder Reservoir

CAUTION: Use only specified brake fluid. Do not use any fluid which contains a petroleum base. Do not use a container which has been used for petroleum based fluids or a container which is wet with water. Petroleum based fluid will cause swelling and distortion of rubber parts in the hydraulic brake system. Water mixed with brake fluid lowers the fluid boiling point. Keep all fluid containers capped to prevent contamination.

Always fill the master cylinder reservoir when the engine is cold.

Never allow the brake fluid to come in contact with the painted surfaces.

The master cylinder reservoir must be kept properly filled to ensure adequate reserve and to prevent air and moisture from entering the hydraulic system. However, because of expansion due to heat absorbed from the brakes and the engine, the reservoir must not be overfilled. The brake fluid reservoir is on the master cylinder, which is located under the hood on the left side of the cowl. Thoroughly clean reservoir cap before removal to avoid getting dirt into reservoir. Remove cup and diaphragm. Add fluid as required to bring level to the "MAX" mark on the reservoir tank. Use "DOT 3" Hydraulic Brake Fluid. If the fluid cap diaphragm is stretched, return it to the original position before installing.

Deterioration of Brake Fluid

Using any other brake fluid than specified or brake fluid with mineral oil or water mixed in will drop the boiling point of brake fluid. It may, in turn, result in vapor lock or deteriorated rubber parts of the hydraulic system. Be sure to change the brake fluid at specified intervals.

If the rubber parts are deteriorated, remove all the system parts and clean them with alcohol. Prior to reassembly, dry the cleaned parts with air to remove the alcohol. Replace all the hoses and rubber parts of the system.

Leakage of Brake Fluid

With engine idling, set shift lever in the neutral position and continue to depress brake pedal at a constant pedal application force.

Should the pedal stroke become deeper gradually, a leakage from the hydraulic pressure system is possible. Make sure by visual check that there is no leak.

Bleeding Brake Hydraulic System

A bleeding operation is necessary to remove air from the hydraulic brake system whenever air is introduced into the hydraulic system. It may be necessary to bleed the hydraulic system at all four brakes if air has been introduced through a low fluid level or by disconnecting brake pipes at the master cylinder. If a brake pipe is disconnected at one wheel, only that wheel cylinder/caliper needs to be bled. If the pipes are disconnected at any fitting located between the master cylinder and brakes, then the brake system served by the disconnected pipe must be bled.

1. For 4–Wheel Antilock Brake System (ABS) equipped vehicle, be sure to remove the ABS main fuse 40A located at the relay and fuse box before bleeding air. If you attempt to bleed air without removing the main fuse, air cannot be let out thoroughly, and this may cause damage to the hydraulic unit. After bleeding air, be sure to replace the ABS main fuse back to its original position.
2. Set the parking brake completely, then start the engine.

NOTE: The vacuum booster will be damaged if the bleeding operation is performed with the engine off.

3. Remove the master cylinder reservoir cap.
4. Fill the master cylinder reservoir with brake fluid. Keep the reservoir at least half full during the air bleeding operation
5. Always use new brake fluid for replenishment.
6. In replenishing brake fluid, take care that air bubbles do not enter the brake fluid.

   When the master cylinder is replaced or overhauled, first bleed the air from the master cylinder, then from each wheel cylinder and caliper following the procedures described below.

Bleeding the Master Cylinder

7. Disconnect the rear wheel brake pipe (1) from the master cylinder.

   Check the fluid level and replenish as necessary. If replenished, leave the system for at least one minute.
8. Depress the brake pedal slowly once and hold it depressed.
9. Completely seal the delivery port of the master cylinder with your finger, where the pipe was disconnected then release the brake pedal slowly.
10. Release your finger from the delivery port when the brake pedal returns completely.
11. Repeat steps 7 through 9 until the brake fluid comes out of the delivery port during step 7.

NOTE: Do not allow the fluid level in the reservoir to go below the half–way mark.

12. Reconnect the brake pipe (1) to the master cylinder and tighten the pipe.
13. Depress the brake pedal slowly once and hold it depressed.
14. Loosen the rear wheel brake pipe (1) at the master cylinder.
15. Retighten the brake pipe, then release the brake pedal slowly.

Downloaded from www.Manualslib.com manuals search engine

16. Repeat steps 13 through 15 until no air comes out of the port when the brake pipe is loosened

NOTE: Be very careful not to allow the brake fluid to come in contact with painted surfaces.

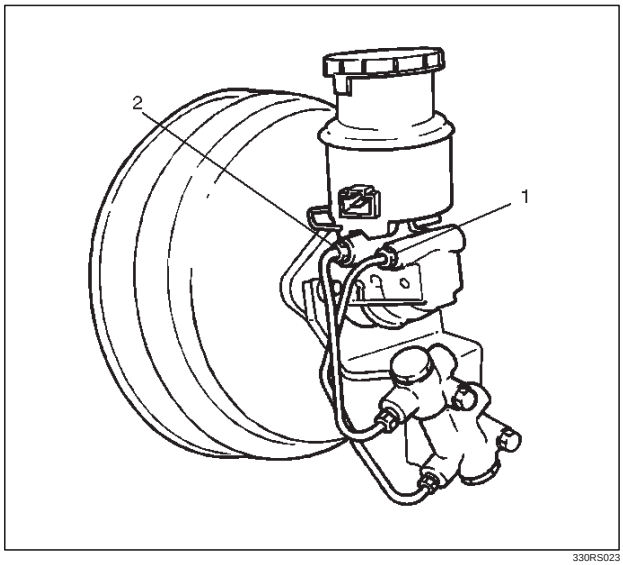

330RS023

17. Bleed the air from the front wheel brake pipe connection (2) by repeating steps 7 through 16.

Bleeding the Caliper

18. Bleed the air from each wheel in the order listed below:
    - Right rear caliper
    - Left rear caliper
    - Right front caliper
    - Left front caliper

    Conduct air bleeding from the wheels in the above order. If no brake fluid comes out, it suggests that air is mixed in the master cylinder. In this case, bleed air from the master cylinder in accordance with steps 7 through 17, and then bleed air from the caliper.
19. Place the proper size box end wrench over the bleeder screw.
20. Cover the bleeder screw with a transparent tube, and submerge the free end of the transparent tube in a transparent container containing brake fluid.
21. Pump the brake pedal slowly three (3) times (once/sec), then hold it depressed.
22. Loosen the bleeder screw until fluid flows through the tube.
23. Retighten the bleeder screw.
24. Release the brake pedal slowly.
25. Repeat steps 21 through 24 until the air is completely removed.

    It may be necessary to repeat the bleeding procedure 10 or more times for front wheels and 15 or more times for rear wheels.
26. Go to the next wheel in the sequence after each wheel is bled.

    Be sure to monitor reservoir fluid level.
27. Depress the brake pedal to check if you feel “sponginess” after the air has been removed from all wheel cylinders and calipers.

    If the pedal feels “spongy”, the entire bleeding procedure must be repeated.
28. After the bleeding operation is completed on the each individual wheel, check the level of the brake fluid in the reservoir and replenish up to the “MAX” level as necessary.
29. Attach the reservoir cap.

    If the diaphragm inside the cap is deformed, reform it and install.
30. Stop the engine.

Flushing Brake Hydraulic System

It is recommended that the entire hydraulic system be thoroughly flushed with clean brake fluid whenever new parts are installed in the hydraulic system. Approximately one quart of fluid is required to flush the hydraulic system. The system must be flushed if there is any doubt as to the grade of fluid in the system or if fluid has been used when it contains the slightest trace of mineral oil. All rubber parts that have been subjected to a contaminated fluid must be replaced.

Brake Pipes and Hoses

The hydraulic brake system components are interconnected by special steel piping and flexible hoses. Flexible hoses are used between the frame and the front calipers, the frame and rear axle case and the rear axle and the rear calipers.

When the hydraulic pipes have been disconnected for any reason, the brake system must be bled after reconnecting the pipe. Refer to “Bleeding the Brake Hydraulic System” in this section.

Brake Hose Inspection

The brake hose should be inspected at least twice a year. The brake hose assembly should be checked for road hazard, cracks and chafing of the outer cover, and for leaks and blisters. Inspect for proper routing and mounting of the hose. A brake hose that rubs on suspension components will wear and eventually fail. A light and mirror may be needed for an adequate inspection. If any of the above conditions are observed on the brake hose, adjust or replace the hose as necessary.

CAUTION: Never allow brake components such as calipers to hang from the brake hoses, as damage to the hoses may occur.

Downloaded from www.Manualslib.com manuals search engine

Front / Rear Caliper Brake Hose

Front / Rear Caliper Brake Hose and Associated Parts

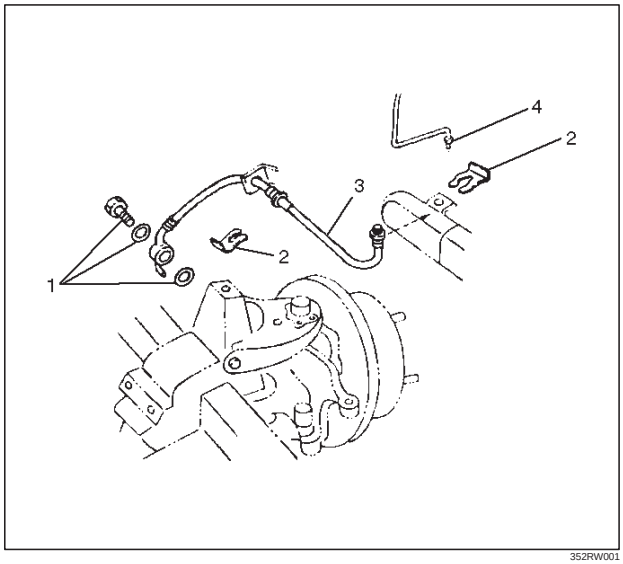

352RW001

Legend

(1) Bolt and Gasket
(2) Clip
(3) Hose
(4) Brake Pipe

Removal

1. Raise the vehicle and support it with suitable safety stands.
2. Remove the wheel and tire assembly.
3. Clean dirt, grease, and other foreign material off the hose fittings at both ends.
4. Disconnect brake pipe.
5. Remove clip.
6. Remove bolt and gasket.
7. Remove hose.

Installation

To install, follow the removal steps in the reverse order, noting the following points:

1. Tighten the brake pipes to the specified torque

   Torque: 16 N·m (12 lb ft)

2. Tighten the bolt to the specified torque.

   Torque: 35 N·m (26 lb ft)

NOTE: Always use new gaskets and be sure to put the hooked edge of the flexible hose end into the anti–rotation cavity.

After installing the brake hoses, bleed the brakes as described in this section.

Downloaded from www.Manualslib.com manuals search engine

Rear Axle Brake Hose

Rear Axle Brake Hose and Associated Parts

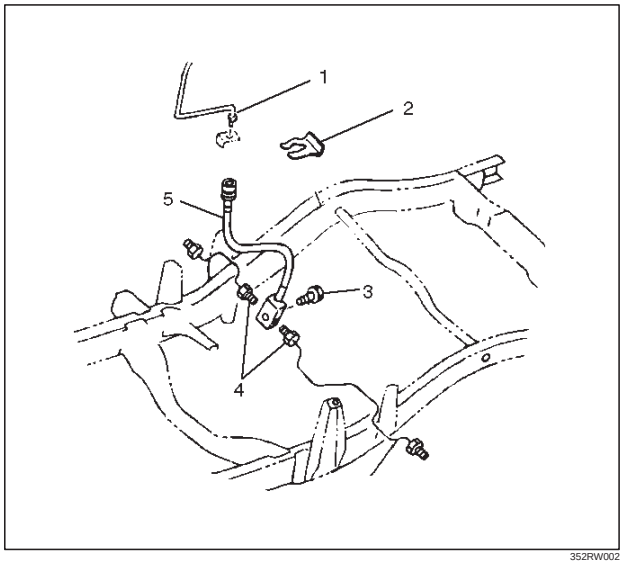

352RW002

Legend

(1) Brake Pipe
(2) Clip
(3) Bolt
(4) Brake Pipe
(5) Hose

Removal

1. Raise the vehicle and support it with suitable safety stands.
2. Remove wheel and tire assembly.
3. Clean dirt, grease, and other foreign material off the hose fittings at both ends.
4. Disconnect brake pipe.
5. Remove clip.
6. Remove brake pipe.
7. Remove bolt.
8. Remove hose.

Installation

To install, follow the removal steps in the reverse order, noting the following points:

1. Tighten the brake pipes to the specified torque

   Torque: 16 N·m (12 lb ft)

2. Tighten the bolt to the specified torque.

   Sems bolts

   Torque: 13 N·m (113 lb in)

   Flange bolts

   Torque: 15 N·m (11 lb ft)

After installing the brake hoses, bleed the brakes as described in this section.

Downloaded from www.Manualslib.com manuals search engine

Brake Pipe

Removal

1. Raise the vehicle and support it with suitable safety stands.
2. Remove wheel and tire assembly as necessary.
3. Clean dirt, grease, and other foreign material off the pipe fittings at both ends.
4. Remove brake pipe (1).

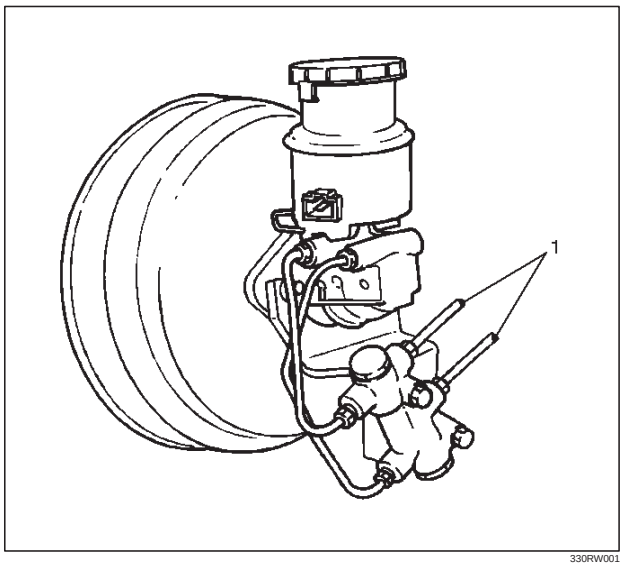

330RW001

5. Remove plastic clip (2).

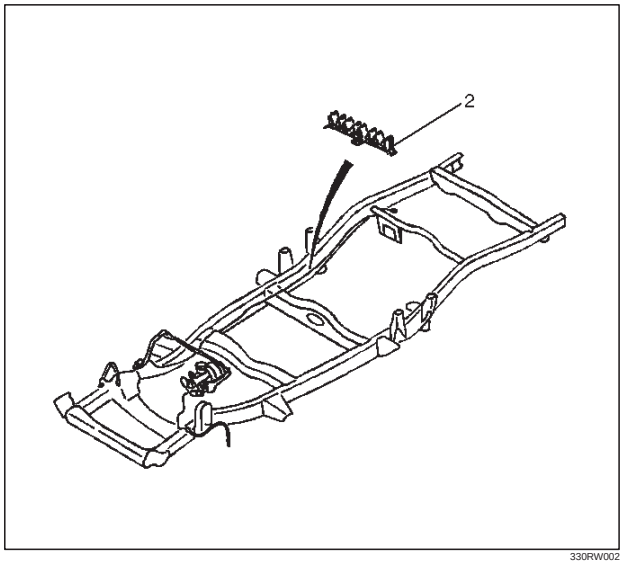

330RW002

Installation

To install, follow the removal steps in the reverse order, noting the following points:

1. Tighten the brake pipes to the specified torque.

   Master cylinder side

   Torque: 12 N·m (104 lb in)

   Other

   Torque: 16 N·m (12 lb ft)

After installing the brake pipes, bleed the brakes as described in this section.

Downloaded from www.Manualslib.com manuals search engine

P & B (Proportioning and Bypass) Valve

P & B (Proportioning and Bypass) Valve Sectional View

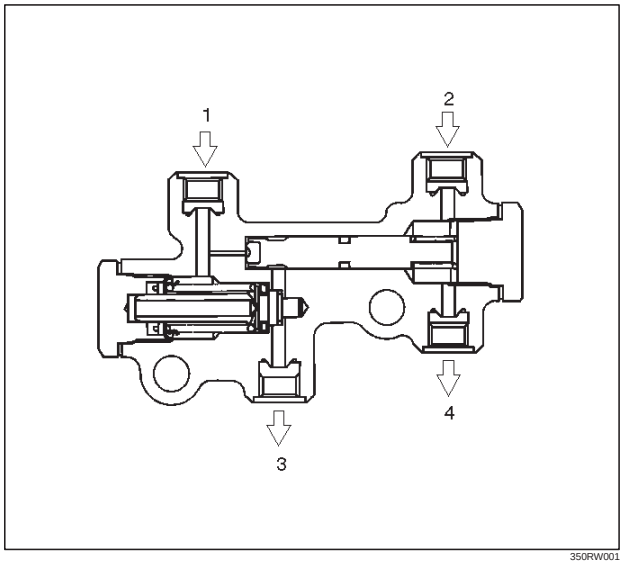

350RW001

Legend

(1) Master Cylinder (Secondary)
(2) Master Cylinder (Primary)
(3) Rear Brake
(4) Front Brake

The P&B valve contains two sections, each serving a different function.
The proportioning section of the P&B valve proportions outlet pressure to the rear brakes after a predetermined rear input pressure has been reached. This is done to prevent rear wheel lock up on the vehicles with light rear wheel loads. The valve has a pass feature which assures full system pressure to the rear brakes in the event of front brake system malfunction. Also full front pressure is retained in the event of rear brake malfunction.
The combination valve has a pressure differential warning switch which is designed to constantly compare front and rear brake pressure from the master cylinder and turn on the brake system warning light on the instrument panel in the event of a front or rear system malfunction. The valve and switch are so designed that the switch will latch in the warning position once a malfunction has occured. The only way the light can be turned off is to repair the malfunction and apply a pedal forced required to developed line pressure. The P&B valve is not repairable and must be replaced as a complete assembly.

Removal

1. The P&B valve is not repairable and must be replaced as a complete assembly. Care must be taken to prevent brake fluid from contacting any painted surface.
2. Remove hydraulic pipes (1) and plug (1) the pipes to prevent the loss of fluid or the entrance of dirt.
3. Remove bolt (3).
4. Remove P&B valve (2).

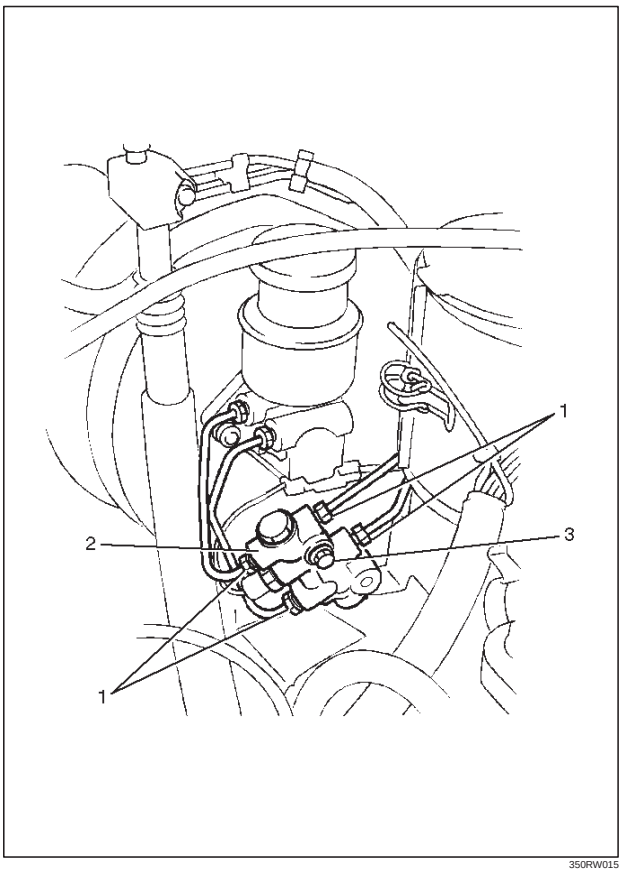

350RW015

Installation

1. Install P&B valve (2).
2. Install bolt (3) and tighten the bolt to the specified torque.

   Torque: 13 N·m (113 lb in)

3. Install hydraulic pipes (1) and tighten the bolt to the specified torque.

   Torque: 16 N·m (12 lb ft)

4. After installing the brake pipes, bleed the brakes refering to “Bleeding Brake Hydraulic System” in this section.

Downloaded from www.Manualslib.com manuals search engine

Main Data and Specifications

Torque Specifications

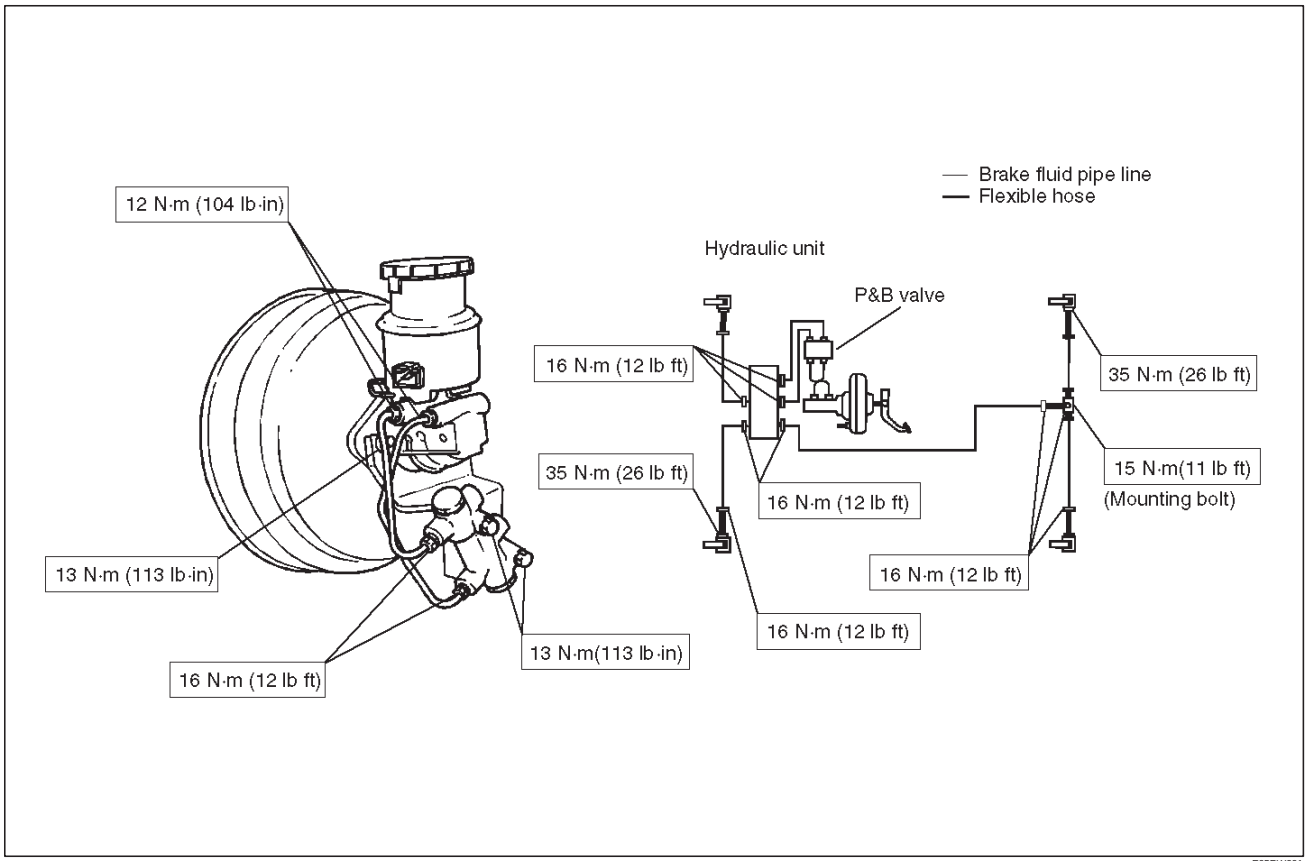

E05RW001

Downloaded from www.Manualslib.com manuals search engine

Brake Pedal

Checking Pedal Height

The push rod serves as the brake pedal stopper when the pedal is fully released. Brake pedal height adjustment should be performed as follows:

Adjust Brake Pedal

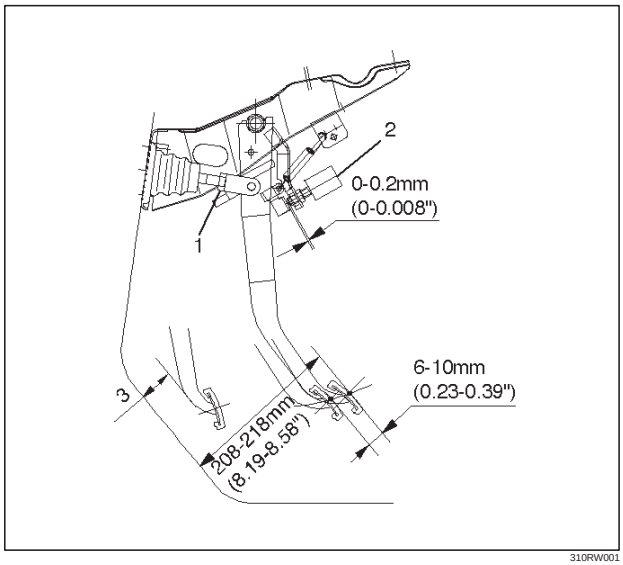

310RW001

1. Measure the brake pedal height after making sure the pedal is fully returned by the pedal return spring.
   Pedal height must be measured after starting the engine and receiving it several times.

   Pedal Free Play : 6-10 mm (0.23-0.39 in)

   Pedal Free Play : 208-218 mm (8.19-8.58 in)

NOTE: Pedal free play must be measured after turning off the engine and stepping on the brake pedal firmly five times or more.

2. If the measured value is not within the above range, adjust the brake pedal as follows:
   a. Disconnect the stoplight switch connector.
   b. Loosen the stoplight switch lock nut (1).
   c. Rotate the stoplight switch so that is moves away from the brake pedal.
   d. Loosen the lock nut on the push rod.
   e. Adjust the brake pedal to the specified height by rotating the push rod in the appropriate direction.
   f. Tighten the lock nut to the specified torque.

   Torque: 20 N·m (15 lb ft)

   g. Adjust the stoplight switch to the specified clearance (between the switch housing and the brake pedal) by rotating the switch housing.

   Clearance : 0–0.2 mm (0–0.008 in)

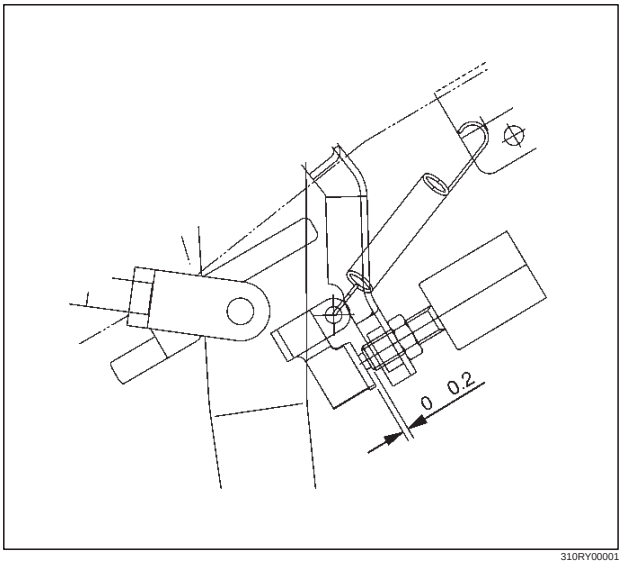

310RY00001

NOTE: While adjusting the stoplight switch, make sure that the threaded part of the stoplight switch does not push the brake pedal.

   h. Tighten the stoplight switch lock nut.
   i. Connect the stoplight switch connector.

Checking Pedal Travel

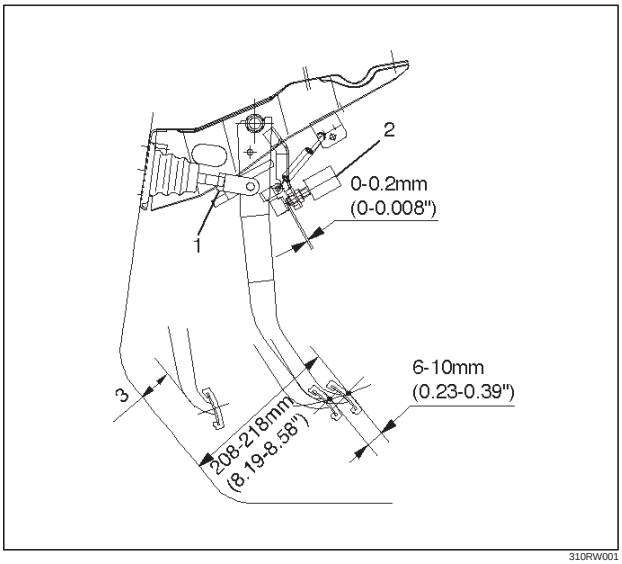

310RW001

1. Pedal height (3) must be measured after starting the engine and revving it several times to apply vacuum to the vacuum booster fully.

NOTE: Pedal height (3) must be 100 mm (3.9 in) or more when about 50 kg (110.25 lb) of stepping force is applied.

2. If the measured value is lower than the above range, air existing in the hydraulic system is suspected. Perform the bleeding procedure.

Downloaded from www.Manualslib.com manuals search engine

Brake Pedal and Associated Parts

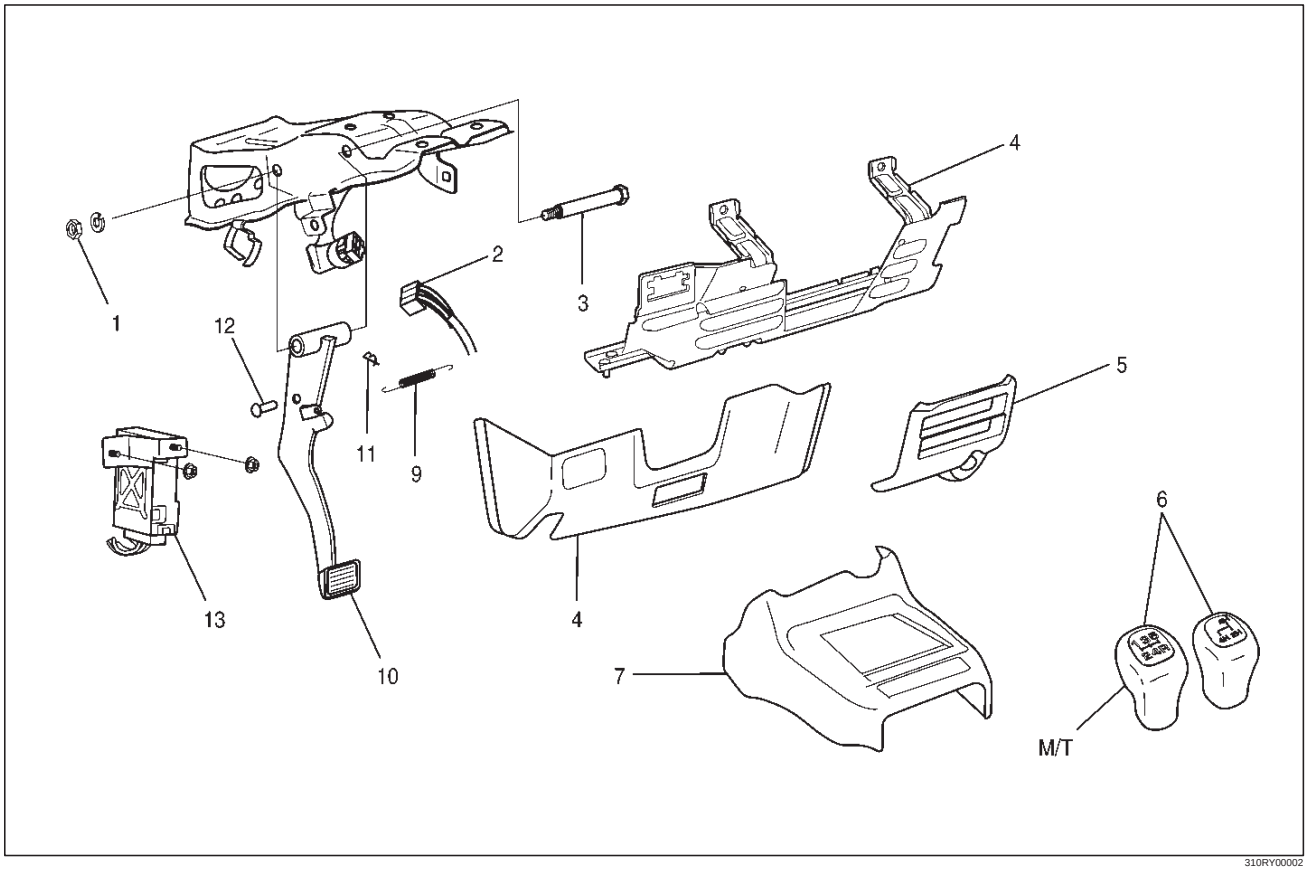

310RY00002

Legend

(1) Nut
(2) Stoplight Switch Connector
(3) Fulcrum Pin
(4) Driver Knee Bolster Assembly
(5) Lower Cluster Assembly
(6) Shift Knob
(7) Front Console Assembly
(8) Instrument Panel Driver Lower Cover
(9) Return Spring
(10) Brake Pedal
(11) Snap Pin
(12) Pin
(13) Anti–theft Controller

Removal

1. Remove shift knob.
2. Remove front console assembly.
3. Remove lower cluster assembly.
4. Remove instrument panel driver lower cover.
5. Remove driver knee bolster assembly.
6. Remove anti–theft controller.
7. Remove stoplight switch connector.
8. Remove return spring.
9. Remove snap pin.
10. Remove pin.
11. Remove nut.
12. Remove fulcrum pin.
13. Remove brake pedal.

Installation

1. Install brake pedal.
2. Install fulcrum pin and apply grease to the entire circumference of the fulcrum pin.

   Torque: 33 N·m (24 lb ft)
3. Install nut and tighten the nut to the specified torque.

   Torque: 33 N·m (24 lb ft)
4. Install pin and apply grease to the entire circumference of the push rod pin.
5. Install snap pin and adjust the pedal free travel
   Refer to “Brake Pedal Adjustment” previously in this section.
6. Install return spring.
7. Connect stoplight switch connector.
8. Connect anti–theft connector.
9. Install driver knee bolster assembly.
10. Install instrument panel driver lower cover.

Downloaded from www.Manualslib.com manuals search engine

11. Install lower cluster assembly.
12. Install front console assembly.
13. Install shift knob.

Stoplight Switch

Removal

1. Remove shift knob.
2. Remove front console assembly.
3. Remove lower cluster assembly.
4. Remove instrument panel driver lower cover.
5. Remove driver knee bolster assembly.
6. Remove stoplight switch connector (3).
7. Remove lock nut (1).
8. Remove switch (2).

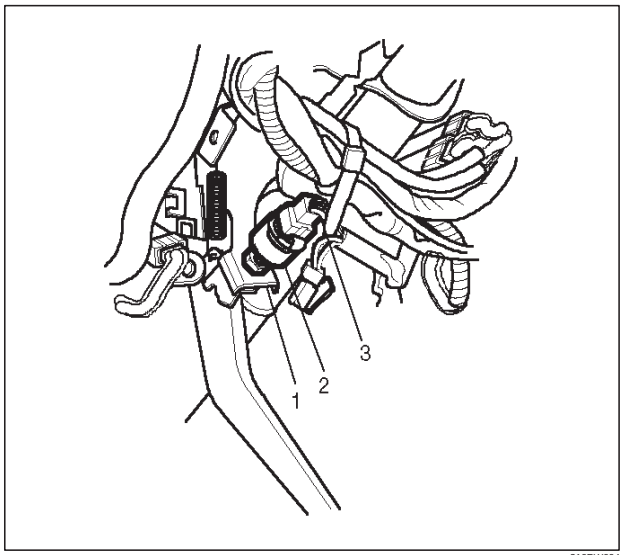

310RW004

Installation

1. Install switch and adjust the stoplight switch to the specified clearance (between the switch housing and the brake pedal) by rotating the switch housing.

Clearance (1): 0-0.2 mm (0-0.009 in)

NOTE: While adjusting the installation of the stoplight switch, make sure that the threaded part of the stoplight switch does not push the brake pedal.

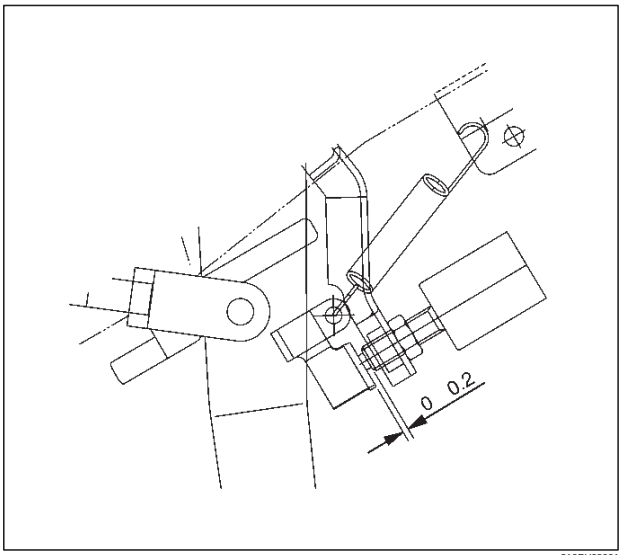

310RY00001

2. Install lock nut.
3. Connect stoplight switch connector.
4. Install driver knee bolster assembly.
5. Install instrument panel driver lower cover.
6. Install lower cluster assembly.
7. Install front console assembly.
8. Install shift knob.

Downloaded from www.Manualslib.com manuals search engine

Main Data and Specifications

General Specifications

Pedal free play	6–10 mm (0.23 –0.39 in)
Pedal Height	208–218 mm (819–8.58 in)

Torque Specifications

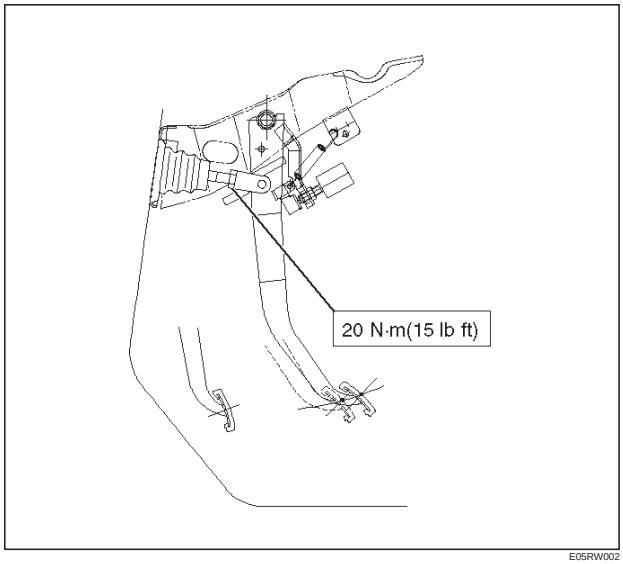

E05RW002

Downloaded from www.Manualslib.com manuals search engine

Fluid Reservoir Tank

Fluid Reservoir Tank and Associated Parts

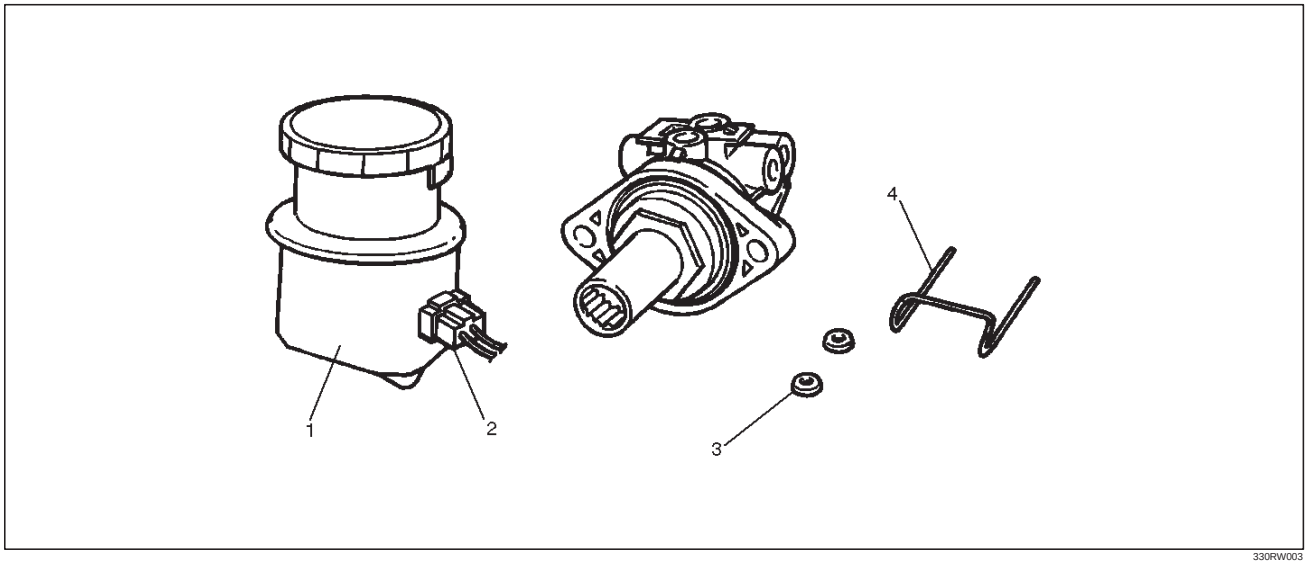

330RW003

Legend

(1) Fluid Reservoir
(2) Electrical Connector
(3) O–ring
(4) Retainer

Removal

NOTE: Before removing the fluid reservoir, remove the brake fluid from the fluid reservoir.

1. Disconnect electrical connector.
2. Remove retainer (1).

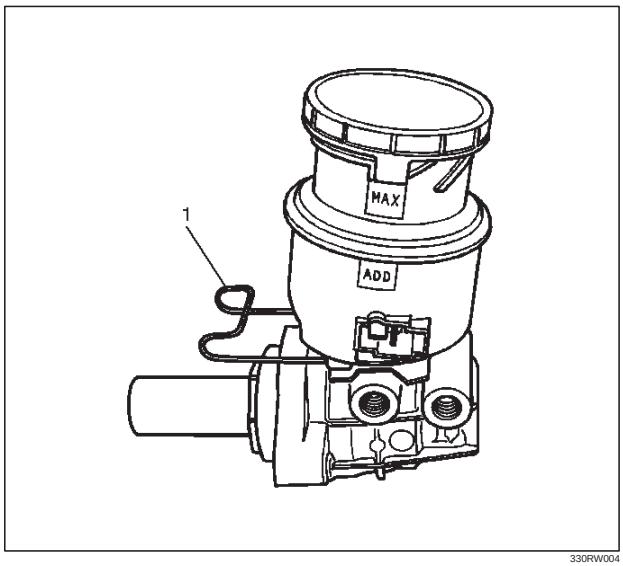

330RW004

3. Remove fluid reservoir and the fluid lever sensor built into the fluid reservoir . The fluid level sensor cannot be removed for servicing.
4. Remove O–ring.

Installation

To install, follow the removal steps in the reverse order, noting the following points:

1. O–ring (1) must be set onto the fluid reservoir (2), before installing fluid reservoir.

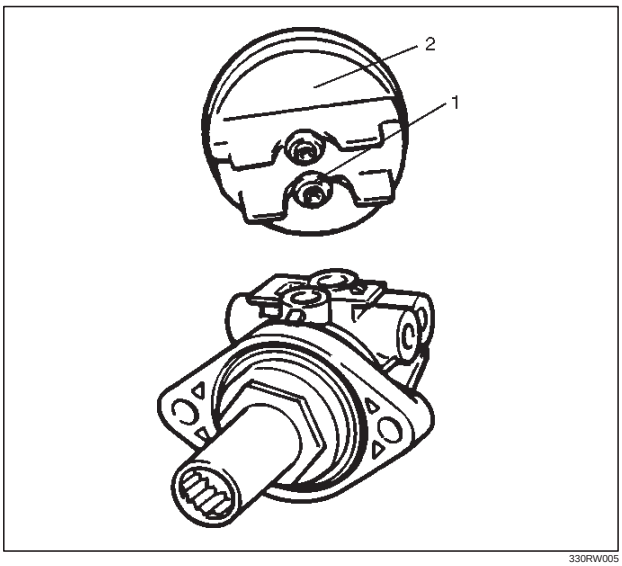

330RW005

Downloaded from www.Manualslib.com manuals search engine

Master Cylinder Assembly

Master Cylinder Assembly and Associated Parts

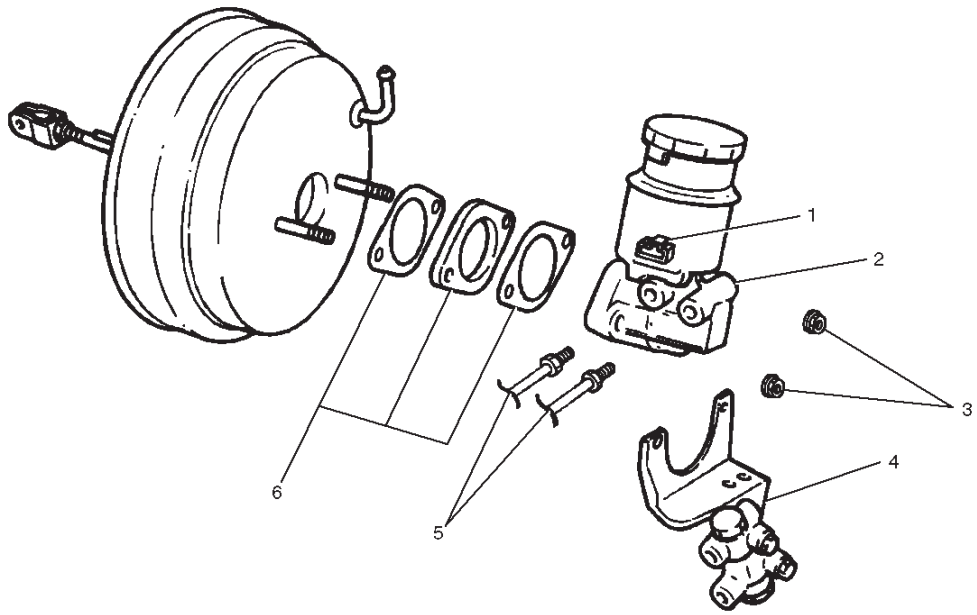

330RW006

Legend

(1) Electrical Connector
(2) Master Cylinder
(3) 2 attaching Nuts
(4) P&B Valve and Bracket
(5) Brake Pipes
(6) Spacer and 2 gaskets

Removal

CAUTION: When removing the master cylinder from the vacuum booster, be sure to get rid of the internal negative pressure of the vacuum booster (by, for instance, disconnecting the vacuum hose) in advance.

If any negative pressure remains in the vacuum booster, the piston may possibly come out when the master cylinder is being removed, letting the brake fluid run out.

While removing the master cylinder, further, do not hold the piston as it can be easily pulled out.

Outside surface of the piston is the surface on which seals are to slide. Care should be taken to keep the surface free of cuts and dents.

1. Disconnect electrical connector.
2. Remove brake pipes after disconnecting the brake pipe, cap or tape the openings of the brake pipe to prevent the entry of foreign matter.
3. Remove 2 attaching nuts.
4. Remove P&B valve and bracket.
5. Remove master cylinder.
6. Remove spacer and the 2 gaskets.

Inspection and Repair

Master Cylinder

The master cylinder is not repairable and must be replaced as a complete assembly if found defective.

Inspection

Excessive brake pedal travel, malfunction or dragging brake suggests that the master cylinder is defective. In such cases perform the following visual check.

Visual Check

Make parts replacement as required if wear, distortion, nicks, cuts, corrosion, or other abnormal conditions are found through the following parts inspection:

- Master cylinder body
- Fluid reservoir

Downloaded from www.Manualslib.com manuals search engine

- O–ring

Functional Inspection of Master Cylinder Piston

Push the primary piston (1) with your fingers to check that it travels smoothly. If the motion is questionable, replace the master cylinder as a complete assembly.

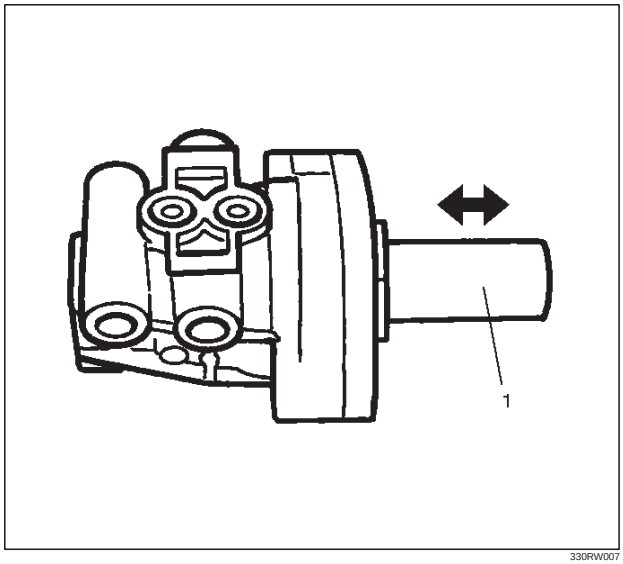

330RW007

Functional Inspection of Master Cylinder

Inspect the master cylinder for function as follows. If any abnormal function is found, replace with a new one. (including the master cylinder attachment and master cylinder plug (7))

Install the primary piston holder (3) J–39242 onto the master cylinder (4). Make sure the spacer (2) (2 bolts) with its adjusting bolt is screwed in up to the “0” line

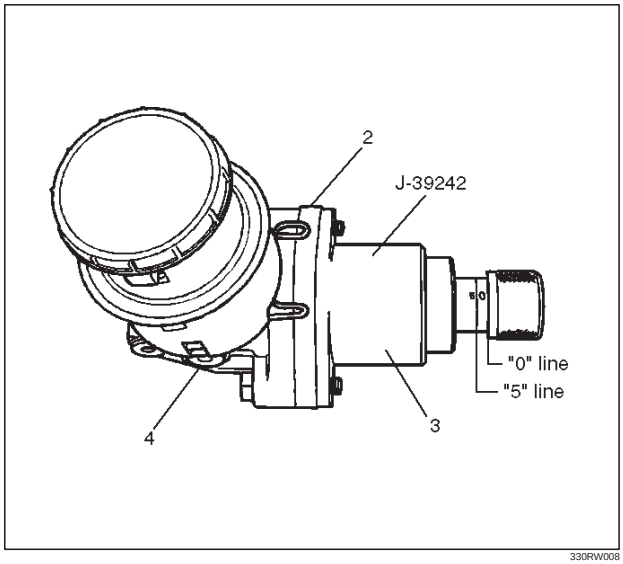

330RW008

Connect the master cylinder attachment (5) J–39242 with the end of the radiator cap tester (6) J–24460–01, and apply air pressure with the cap tester. Make sure there is no rise in pressure and that with the adjusting bolt further screwed in 5 mm (align the adjusting bolt to the “5” line).

There should be a pressure increase of 0.5 kg/cm2 or more.

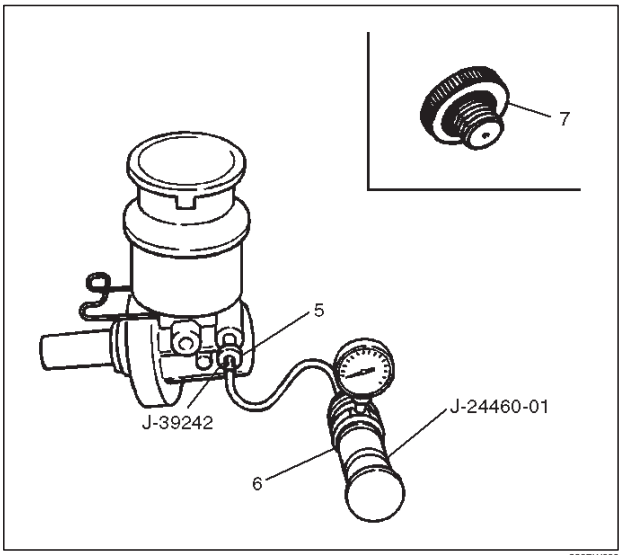

330RW009

NOTE: When checking the front (or primary) side, be sure to mount the master cylinder plug in the rear (or secondary) port.

	“0” Line	“5” Line
Apply air pressure to the front and rear ports	No pressure rise.	Pressure increase of 0.5 kg/cm2 or more
Remarks	Checks port into the atmospheric pressure chamber	Checks air tightness of the pressure chamber

NOTE:

1. Do not use an air compressor, as the air from the compressor is mixed with compressor oil.
2. When installing the master cylinder onto the vacuum booster, always adjust the vacuum booster push rod. (Refer to “Vacuum Booster” in this section).
3. After the master cylinder is installed onto the vehicle, check for leakage, pedal travel and pedal free play.

Installation

1. Install spacer and the 2 gaskets.
2. Install master cylinder, when replacing the master cylinder or vacuum booster or both, always measure the vacuum booster push rod protrusion and adjust it as necessary (Refer to “Vacuum Booster” in section).
3. Install P&B valve and bracket.
4. Install 2 attaching nuts and tighten the attaching nuts to the specified torque.

   Torque: 13 N·m (113 lb in)

Downloaded from www.Manualslib.com manuals search engine

5. Install brake pipes and tighten the brake pipe to the specified torque.

   Master cylinder side

   Torque: 12 N·m (104 lb in)

   Others

   Torque: 16 N·m (12 lb ft)

6. Connect electrical connector.

Main Data and Specifications

General Specifications

Type	Dual–circuit
Piston bore diameter	25.4 mm (1.000 in)

Torque Specifications

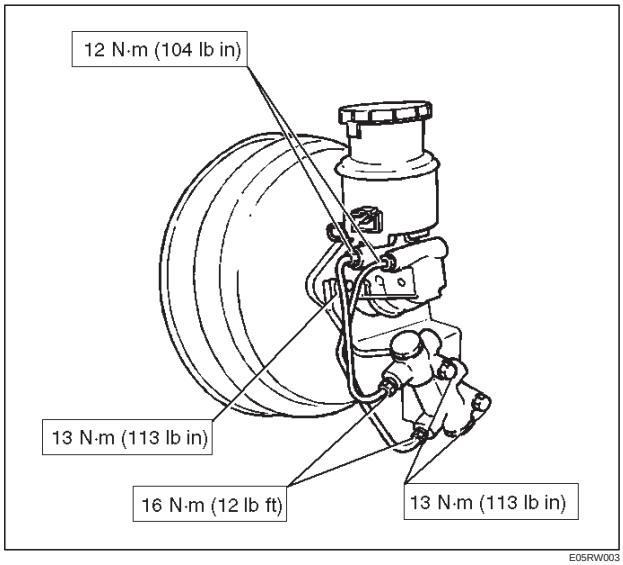

E05RW003

Downloaded from www.Manualslib.com manuals search engine

Special Tools

ILLUSTRATION	**TOOL NO.** TOOL NAME
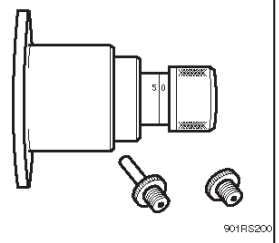	J-39242 Primary Piston Holder (including master cylinder attachment and master cylinder plug
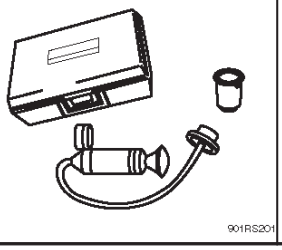	J-24460-01 Radiator Cap Tester

Downloaded from www.Manualslib.com manuals search engine

Vacuum Booster Assembly

Vacuum Booster Assembly and Associated Parts

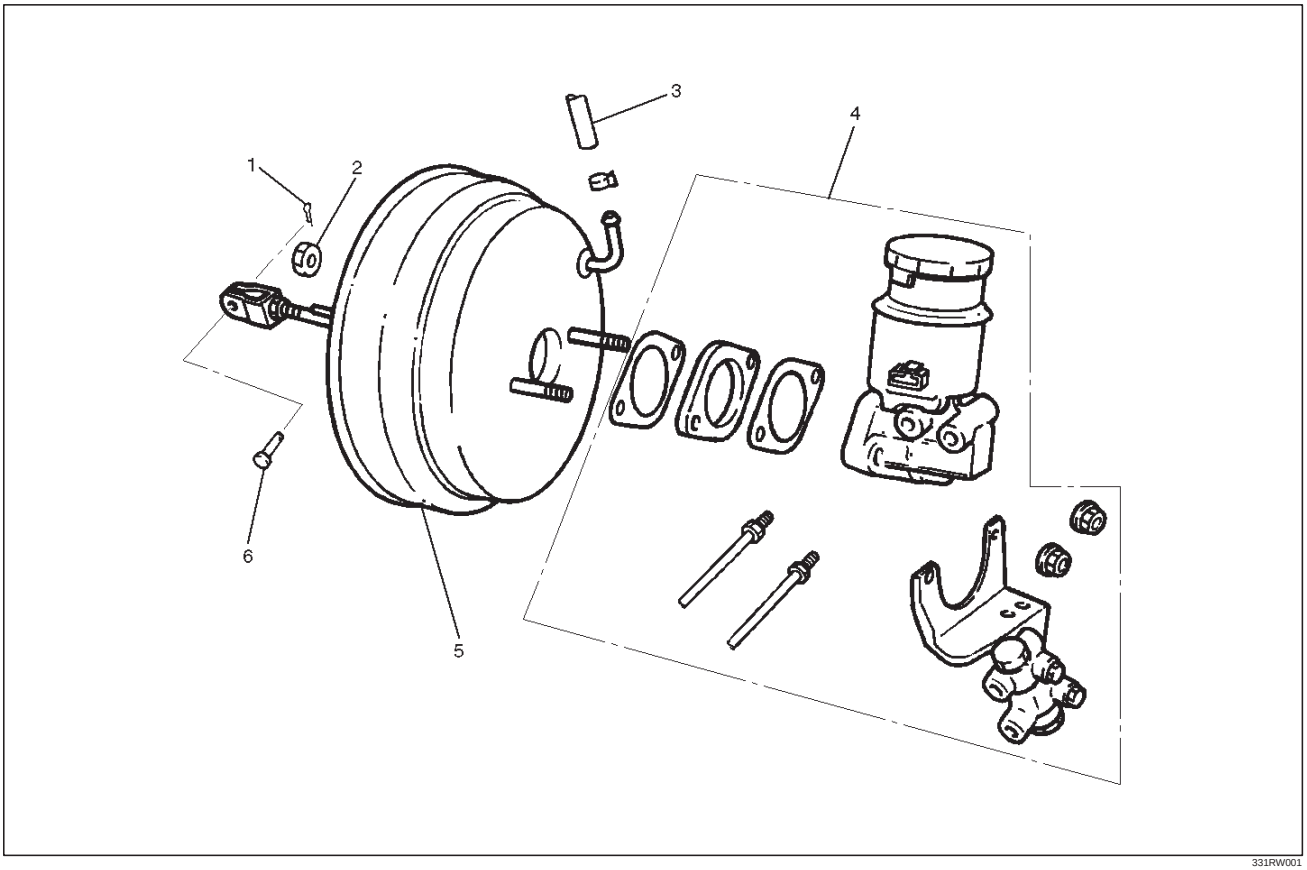

331RW001

Legend

(1) Pin
(2) Vacuum Booster Fixing Nut
(3) Vacuum Hose
(4) Master Cylinder
(5) Vacuum Booster
(6) Snap Pin

Removal

1. Before removing the vacuum booster assembly, disconnect and remove the brake pipes.
2. Remove master cylinder, refer to “Master Cylinder Removal” in this section.

CAUTION: When removing the master cylinder from the vacuum booster, be sure to get rid of the internal negative pressure of the vacuum booster (by, for instance, disconnecting the vacuum hose) in advance.

If any negative pressure remains in the vacuum booster, the piston may possibly come out when the master cylinder is being removed, letting the brake fluid run out.

While removing the master cylinder, further, do not hold the piston as it can be easily pulled out.

Outside surface of the piston is the surface on which seals are to slide. Care should be taken to keep the surface free of cuts and dents.

3. Remove vacuum hose.
4. Disconnect the yoke clevis from the brake pedal.
5. Remove vacuum booster fixing nut.
6. Remove vacuum booster.

Inspection and Repair

Vacuum Hose

1. Inspect the check valve (2), which is installed inside the vacuum hose.
2. Air should pass freely from the vacuum booster (3) to the engine (1).

Downloaded from www.Manualslib.com manuals search engine

3. Air should not pass from the engine (1) to the vacuum booster (3). If it does, the check valve is inoperative and the vacuum hose built check valve must be replaced.

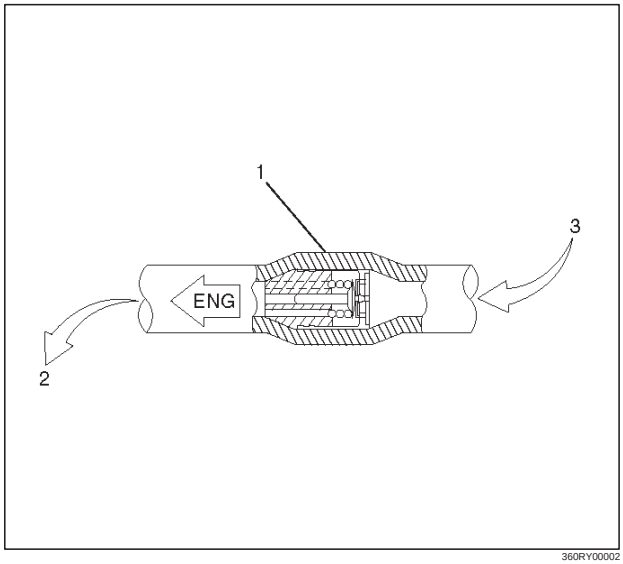

360RY00002

Installation

1. Install vacuum booster and vacuum booster push rod adjustment.

NOTE: When replacing either the master cylinder or vacuum booster, be sure to measure push rod, and adjust if required.

2. Remove retainer from vacuum booster front shell using a small screwdriver. Then gently draw plate and seal assembly out of the shell inside.

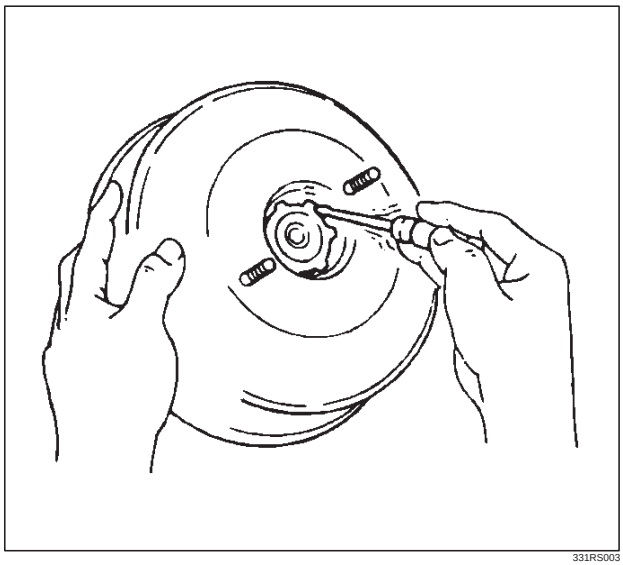

331RS003

3. Set push rod gauge J–39216 on vacuum booster, and apply negative pressure by means of vacuum pump J–23738–A so that the pressure in the vacuum booster becomes 500 mm Hg.

NOTE: Be sure to apply NEGATIVE pressure after installing a push rod gauge on the vacuum booster.

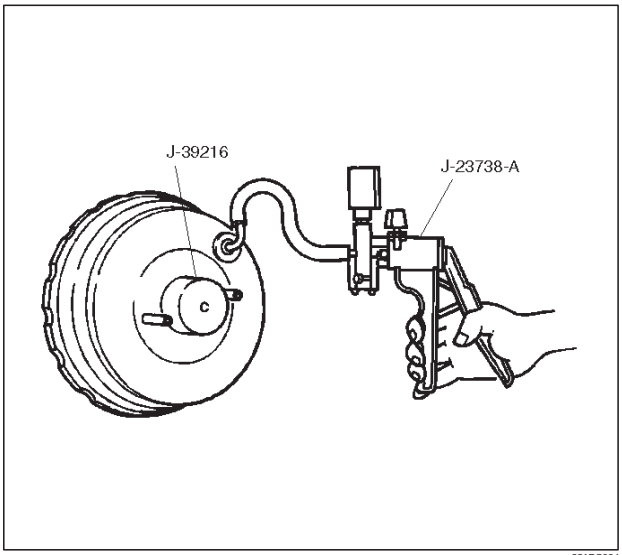

331RS004

4. Measure dimension (4).

Dimension (4) (Standard): –0.1–0.1 mm (–0.0039–0.0039 in)

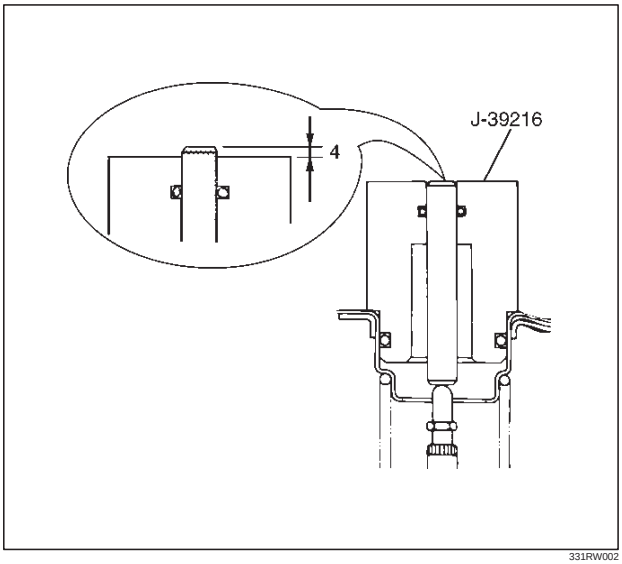

331RW002

Downloaded from www.Manualslib.com manuals search engine

5. If dimension (4) is out of the standard range, adjust push rod using the Push Rod Support J–39241.

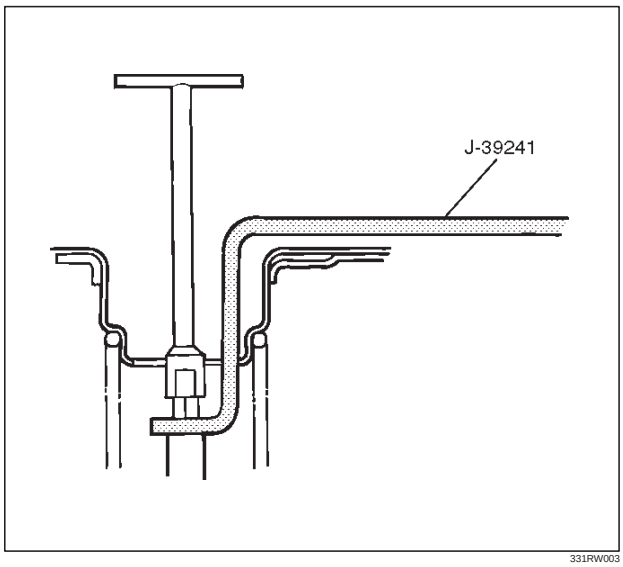

6. Mount plate and seal assembly in vacuum booster front shell. Then install the retainer.
7. Install vacuum booster fixing nut and tighten the specified torque.

Torque: 21 N·m (16 lb ft)

8. Install yoke clevis.
9. Connect vacuum hose and make sure that the arrow on the hose points in the direction of the engine.
10. Install master cylinder, refer to “Master Cylinder Installation” in this section.

Downloaded from www.Manualslib.com manuals search engine

Exterior Components

Exterior Components and Associated Parts

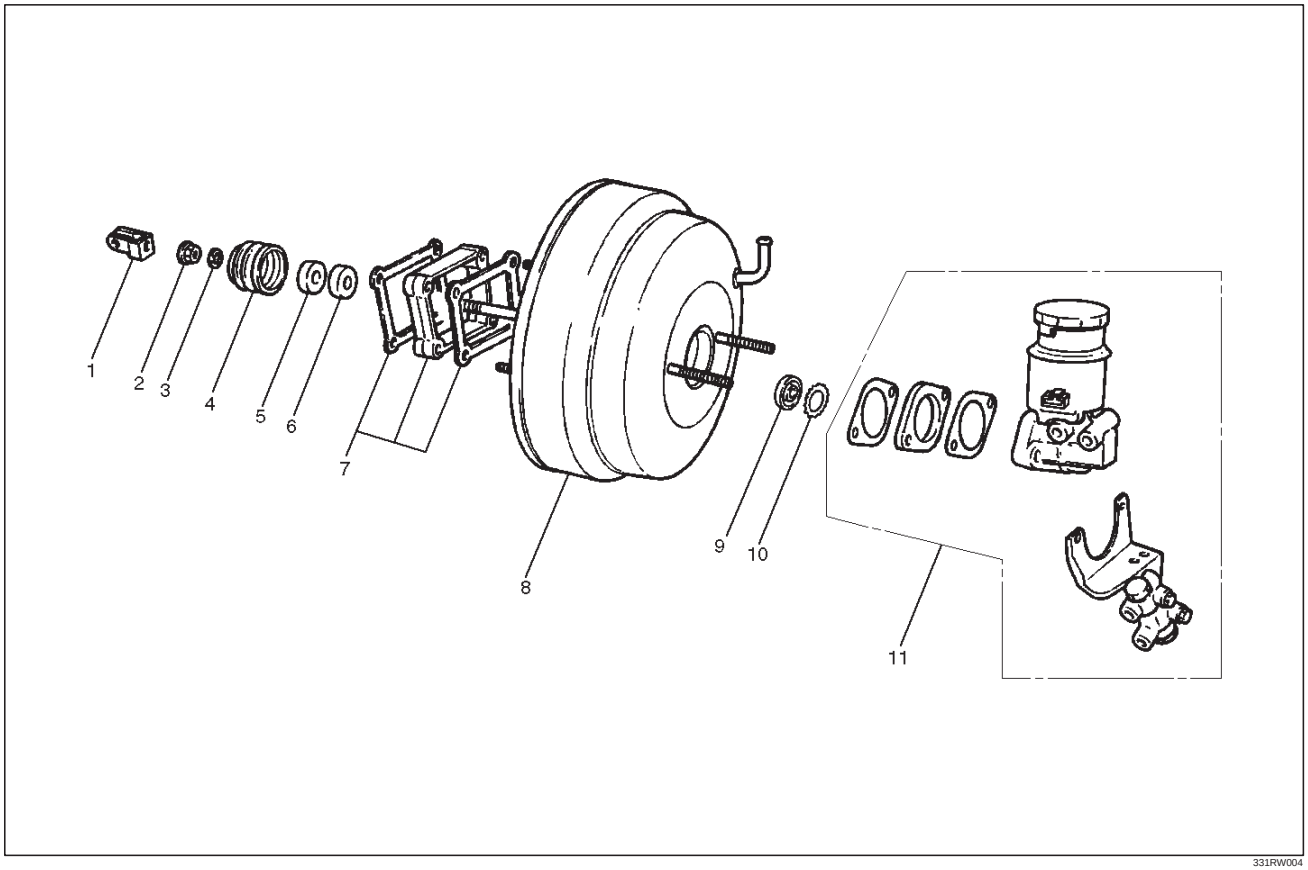

331RW004

Legend

(1) Yoke Clevis
(2) Lock Nut
(3) Retaining Clip
(4) Valve Body Guard
(5) Silencer
(6) Filter
(7) 2 Gaskets and Spacer
(8) Vacuum Booster
(9) Retainer
(10) Plate and Seal Assembly
(11) Master Cylinder

Removal

1. Remove master cylinder, refer to “Master Cylinder” in this section.
2. Remove vacuum booster, refer to “Vacuum Booster” in this section.
3. Remove yoke clevis.
4. Remove lock nut.
5. Remove retaining clip.
6. Remove valve body guard.
7. Remove silencer.
8. Remove filter.
9. Remove 2 gaskets and spacer.
10. Remove retainer, use a small screwdriver to pry out the retainer. Gently pull out the plate and seal assembly from the shell.

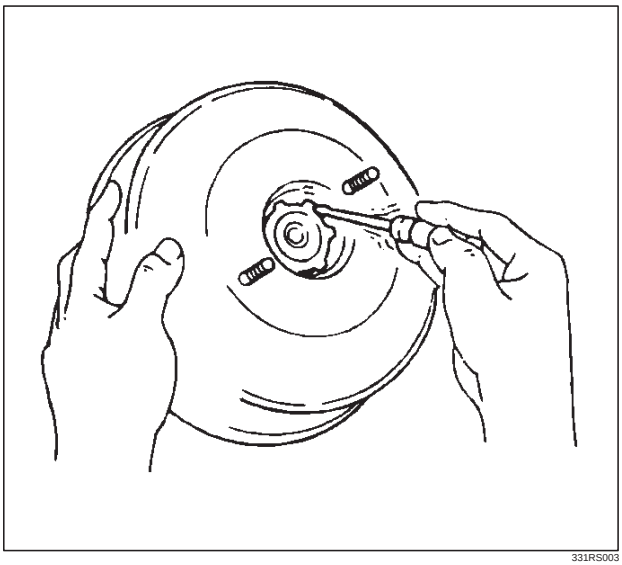

331RS003

Downloaded from www.Manualslib.com manuals search engine

11. Remove plate and seal assembly.

Inspection and Repair

Visual Check

Make necessary parts replacement if cuts, nicks, excessive wear, or other abnormal conditions are found through inspection. Check the following parts:

- Yoke clevis
- Valve body guard
- Silencer
- Filter plate and seal assembly

Installation

1. Install plate and seal assembly.
2. Install retainer.
3. Install 2 gaskets and spacer.
4. Install filter.
5. Install silencer.
6. Install valve body guard.
7. Install retainer.
8. Install lock nut and tighten to the specified torque.

   Torque: 20 N·m (15 lb ft)
9. Install yoke clevis.
10. Install vacuum booster, refer to “Vacuum Booster” in this section.
11. Install master cylinder, refer to “Master Cylinder” in this section and after installation, perform brake pedal check and adjustment. Refer to “Brake Pedal” in this section.

Vacuum Booster Overhaul

Vacuum Booster

The vacuum booster cannot be disassembled for repair. Replace a defective vacuum booster with a new one.

Downloaded from www.Manualslib.com manuals search engine

Main Data and Specifications

General Specifications

Vacuum booster diaphragm diameter (Front)	205 mm (8.07 in)
Vacuum booster diaphragm diameter (Rear)	230 mm (9.06 in)
Push rod stroke	More than 32.0 mm (1.26 in)
Plunger diameter	10.25 mm (0.40 in)
Push rod diameter	27.4 mm (1.08 in)

Torque Specifications

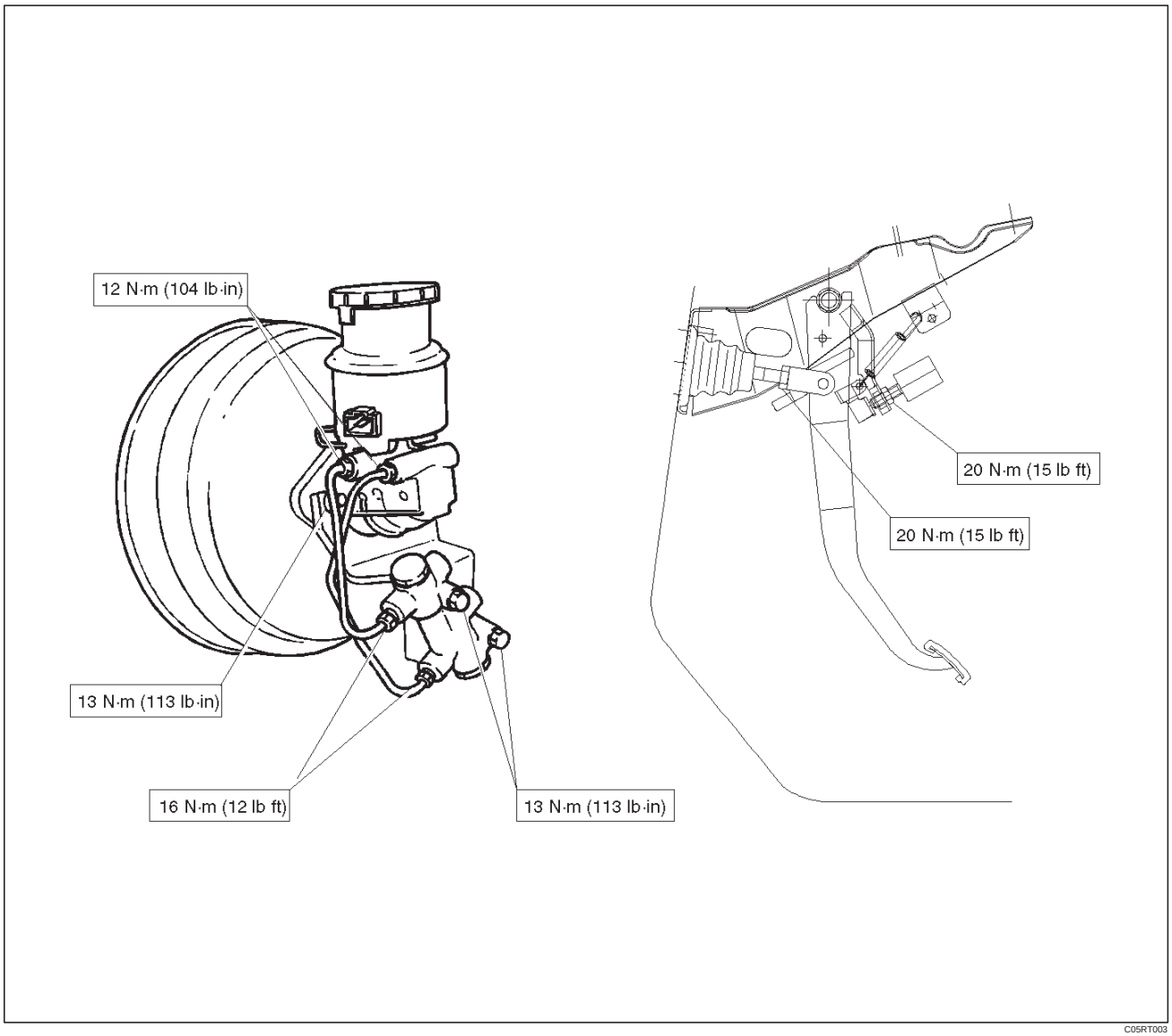

C05RT003

Downloaded from www.Manualslib.com manuals search engine

Special Tools

ILLUSTRATION	TOOL NO. TOOL NAME
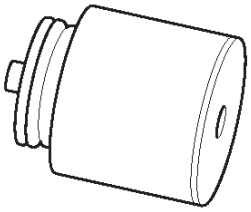 901RS202	J-39216 Push Rod Gauge
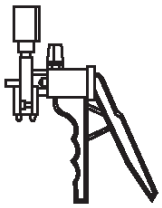 901RS203	J-23738-A Vacuum Pump
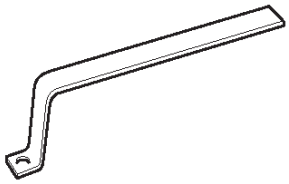 901RS204	J-39241 Push Rod Support

Downloaded from www.Manualslib.com manuals search engine

Front Disc Brake Pads

Front Disc Brake Pads Inspection

Check the outer pad by looking at each caliper from above. Check the thickness on the inner pad by looking down through the inspection hole in the top of the caliper. Whenever the pad is worn to about the thickness of the pad base, the pad should be removed for further measurements. The pad should be replaced anytime the pad thickness (1) is worn to within 1.00 mm (0.039 in) of the pad itself.
The disc pads have a wear indicator that makes a noise when the pad wears to where replacement is required.

Minimum limit (1): 1.0 mm (0.039 in)

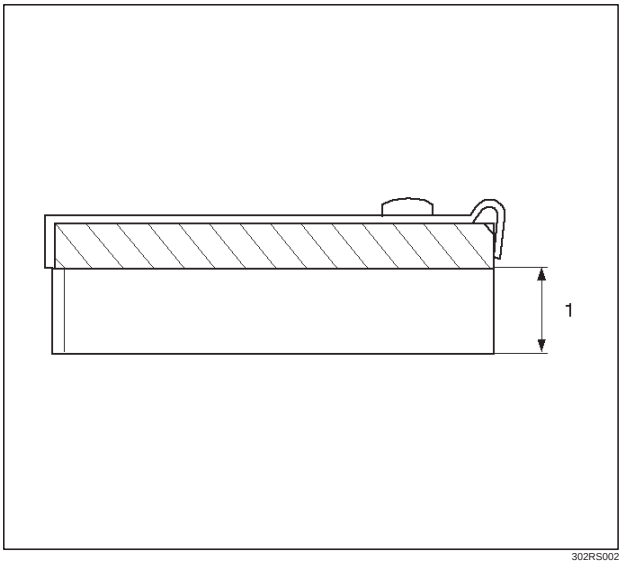

302RS002

Front Disc Brake Pads and Associated Parts

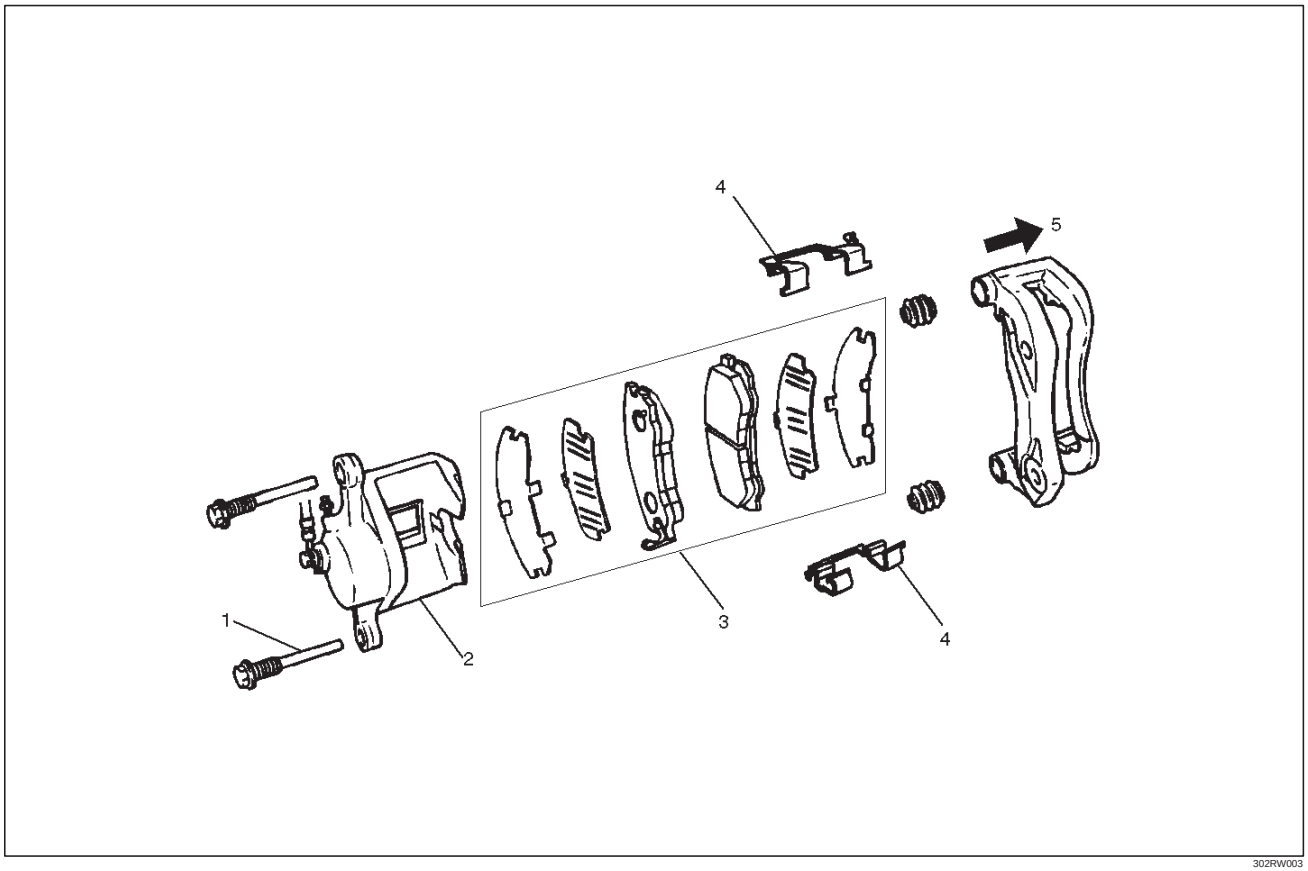

302RW003

Legend

(1) Lock Bolt
(2) Caliper Assembly
(3) Pad Assembly
(4) Clip
(5) Outer Side

Downloaded from www.Manualslib.com manuals search engine

Removal

NOTE: If a squealing noise occurs from the front brake while driving, check the pad wear indicator plate. If the indicator plate contacts the rotor, the disc pad assembly should be replaced.

- Draw out two–thirds of the brake fluid from the reservoir.
- Raise the vehicle and support it with suitable safety stands.

1. Remove wheel and tire assembly, refer to “Wheels and Tires System” in Section 3E.
2. Remove lock bolt (1).

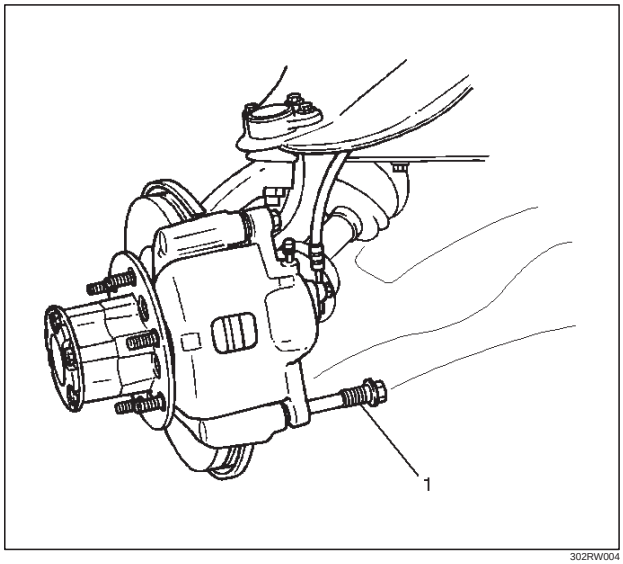

302RW004

3. Remove caliper assembly and support the caliper assembly so that the brake hose is not stretched or damaged.
4. Remove pad assembly with shim.
5. Remove Clip.

Installation

1. Install clip.

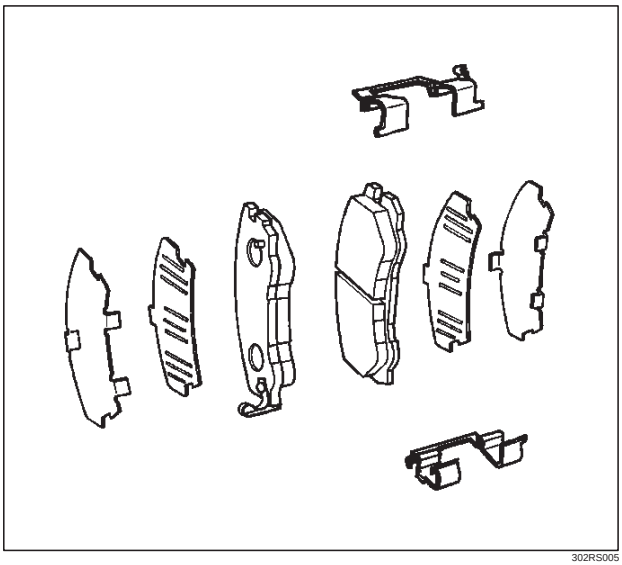

302RS005

2. Install pad assembly with shim and apply special grease (approximately 0.2 g) to both contacting surfaces of the inner shims (2). Wipe off extruded grease after installing.

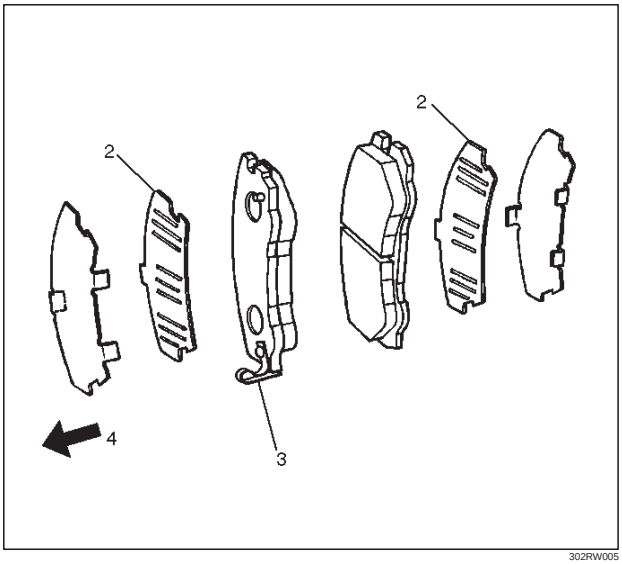

302RW005

Legend

(2) Inner Shim
(3) Wear Indicator
(4) Inner Side

Downloaded from www.Manualslib.com manuals search engine

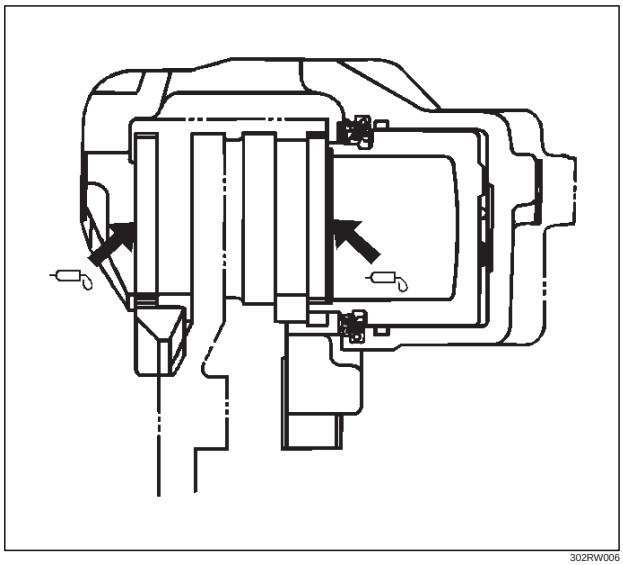

302RW006

3. Install caliper assembly, use adjustable pliers to bottom the piston into the caliper bore.
   Be careful do not damage the piston boot and do not damage the flexible hose by twisting or pulling it.

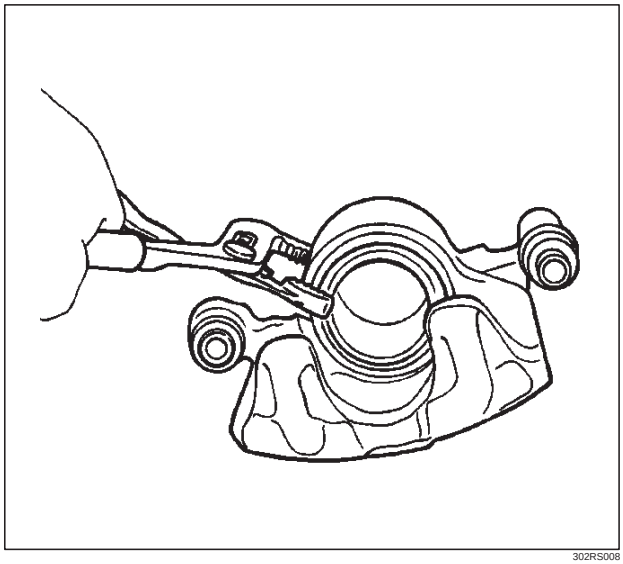

302RS008

4. Install lock bolt (5) and tighten the bolt to the specified torque.

   Torque: 74 N·m (54 lb ft)

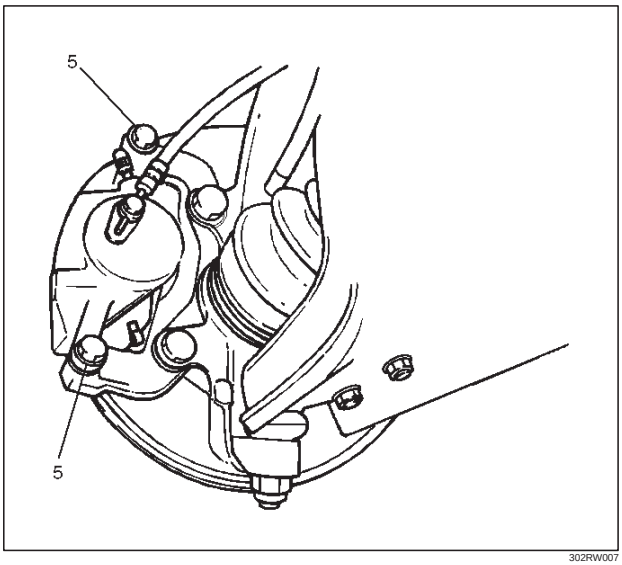

302RW007

5. Install wheel and tire assembly, refer to “Wheels and Tires System” in Section 3E.
6. Pump the brake pedal several times to make sure that the pedal is firm. Check the brake fluid level in the reservoir after pumping the brakes.

Downloaded from www.Manualslib.com manuals search engine

Front Disc Brake Rotor

Inspection

In the manufacturing of the brake rotor, all the tolerances regarding surface finish, parallelism and lateral runout are held very closely. Maintaining these tolerances provides the surface necessary to assure smooth brake operation.

Lateral Runout

Lateral runout is the movement of the rotor from side to side as it rotates on the spindle. This could also be referred to as “rotor wobble”.
This movement causes the piston to be knocked back into its bore. This results in additional pedal travel and a vibration during braking.

Checking Lateral Runout

1. Adjust the wheel bearing correctly, refer to “Differential” in Section 4A.
2. Attach a dial indicator to some portion of the suspension so that the stem contacts the rotor face about 29 mm (1.14 in) from the rotor edge.
3. Move the rotor one complete rotation and the lateral runout should not exceed 0.13 mm (0.005 in).

Maximum runout: 0.13 mm (0.005 in)

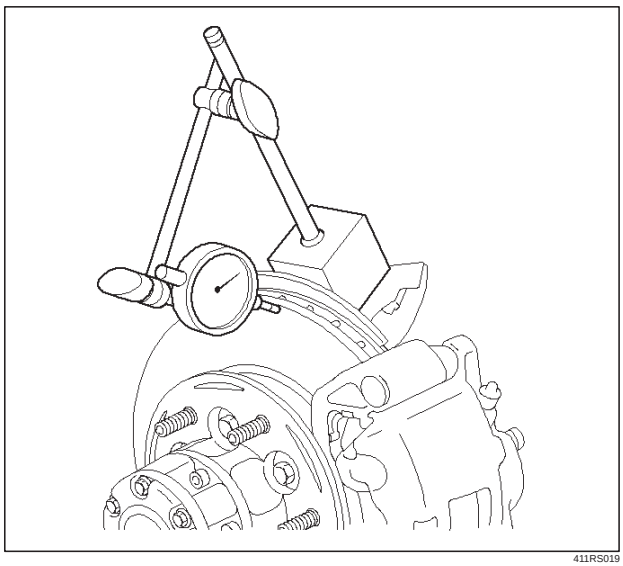

411RS019

Parallelism

Parallelism is the measurement of thickness of the rotor at four or more points around the circumference of the rotor. All measurements must be made 29 mm (1.14 in) from the edge of the rotor.

The rotor thickness must not vary more than 0.010 mm (0.0004 in) from point to point.

Maximum runout: 0.010 mm (0.0004 in)

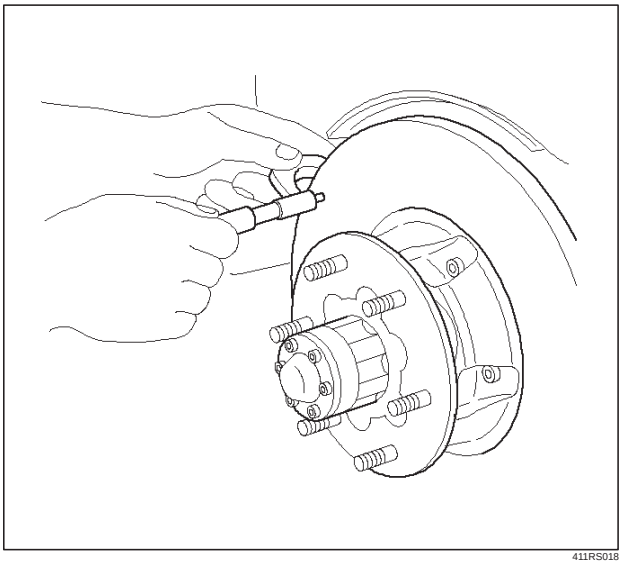

411RS018

Replacing Brake Rotors

When installing new brake rotors, do not refinish the surfaces. These parts are at the correct level of surface finish.

Refinishing Brake Rotors

Accurate control of the rotor tolerances is necessary for proper performance of the disc brakes. Machining of the rotor should be done only with precision equipment. All brake rotors have a minimum thickness dimension cast into them. This dimension is the minimum wear dimension and not a refinish dimension. The minimum wear dimension is 24.60 mm (0.969 in). The minimum refinish dimension is 24.97 mm (0.983 in).
When refinishing rotors, always use sharp cutting tools or bits. Dull or worn tools leave a poor surface finish which will affect initial braking performance. Vibration dampening attachments should always be used when refinishing braking surfaces. These attachments eliminate tool chatter and will result in better surface finish.

Downloaded from www.Manualslib.com manuals search engine

After refinishing, replace any rotor that does not meet the minimum thickness of 24.97 mm (0.983 in). Do not use a brake rotor that will not meet the specification.

Minimum wear dimension: 24.60 mm (0.969 in)

Refinish dimension: 24.97 mm (0.983 in)

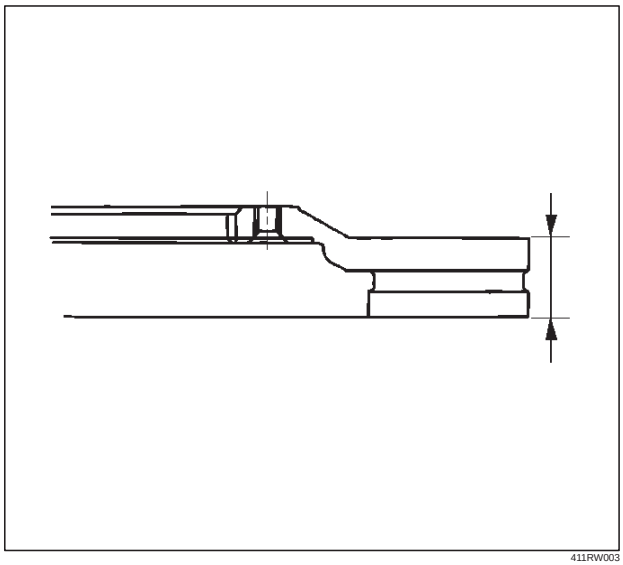

411RW003

Downloaded from www.Manualslib.com manuals search engine

Front Disc Brake Caliper Assembly

Front Disc Brake Caliper Assembly and Associated Parts

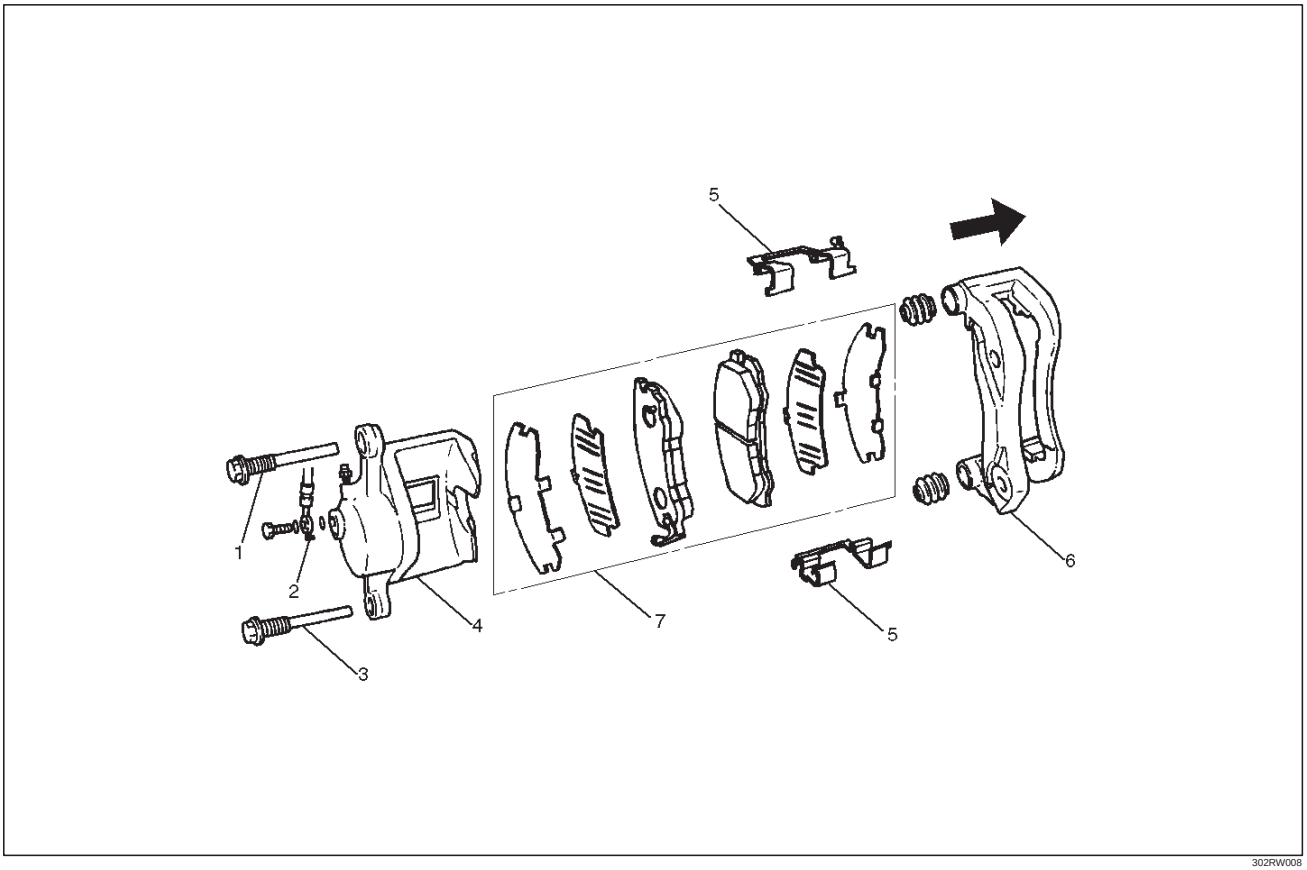

302RW008

Legend

(1) Guide Bolt
(2) Brake Flexible Hose
(3) Lock Bolt
(4) Caliper Assembly
(5) Clip
(6) Support Bracket with Pad Assembly
(7) Pad Assembly

Removal

1. Raise the vehicle and support with suitable safety stands.
2. Wheel and tire assembly, refer to “Wheels and Tires System” in Section 3E.
3. Remove the bolt and gaskets, then disconnect the flexible hose from the caliper and after disconnecting the flexible hose (1), cap or tape the openings to prevent entry of foreign material.

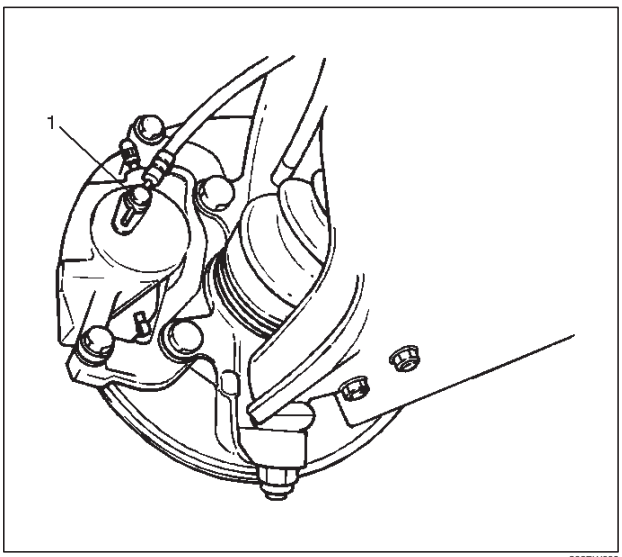

302RW009

Downloaded from www.Manualslib.com manuals search engine

4. Since the brake fluid flows out from the connecting coupler, place a drain pan under the vehicle.
5. Remove guide bolt (2).
6. Remove lock bolt (3).

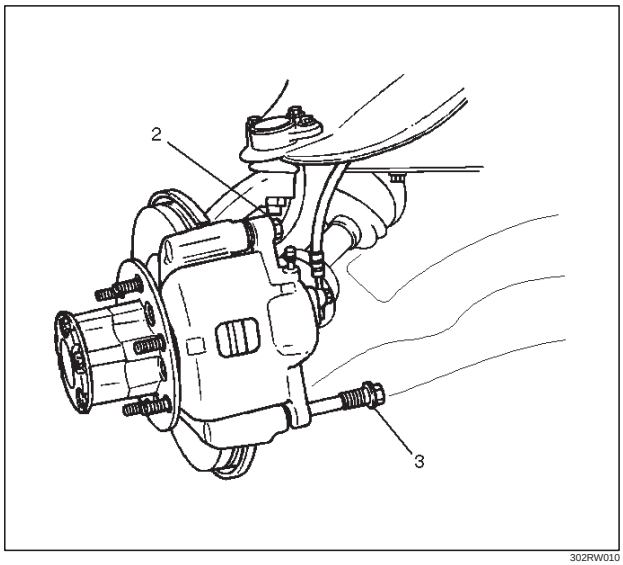

302RW010

7. Remove caliper assembly.
8. Remove support bracket with pad assembly and take care not to damage the flexible brake hose when removing the support bracket.
9. Remove pad assembly with shim and mark the lining locations if they are to be reinstalled.
10. Remove clip.

Installation

1. Install clip.

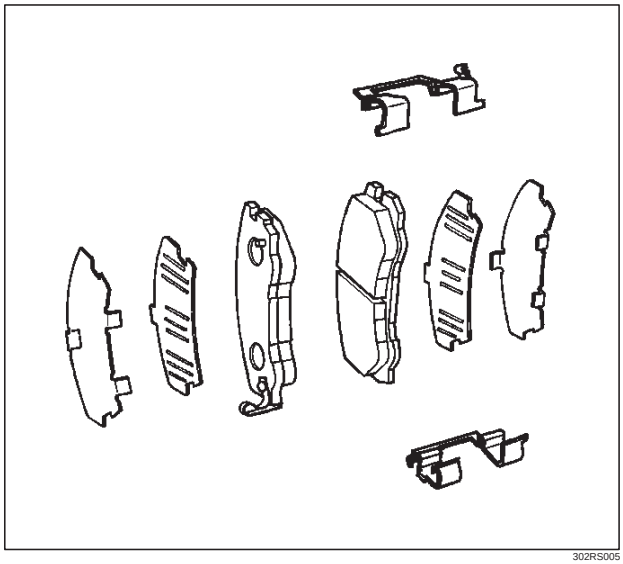

302RS005

2. Install pad assembly with shim and apply special grease (approximately 0.2 g) to both contacting surfaces of the inner shims (6). Wipe off extruded grease after installing.

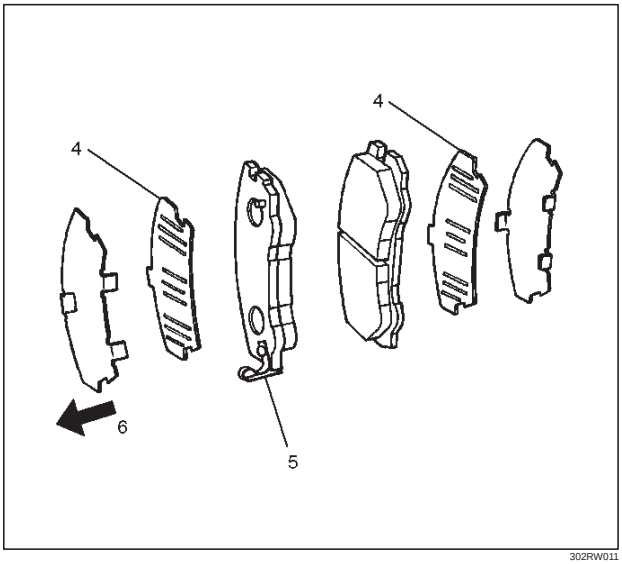

302RW011

Legend

(4) Inner Shim
(5) Wear Indicator
(6) Inner Side

3. Install support bracket and tighten the bolt (7) to the specified torque.

Torque: 155 N·m (115 lb ft)

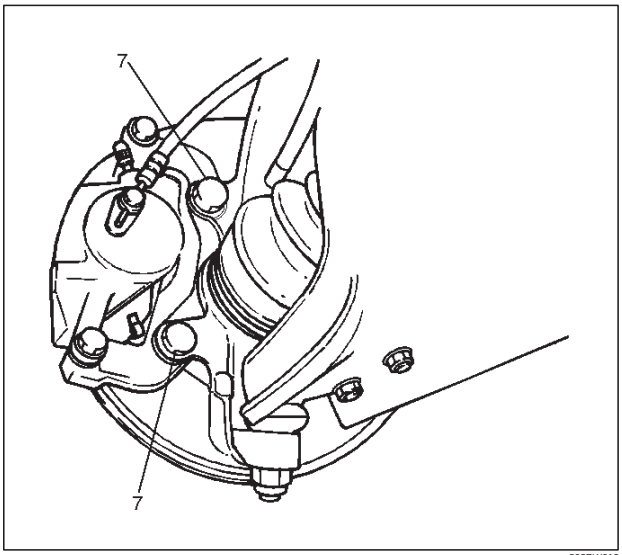

302RW012

4. Install caliper assembly.

Downloaded from www.Manualslib.com manuals search engine

5. Install lock bolt (9) and guide bolt (8) and tighten the bolt to the specified torque.

Torque: 74 N·m (54 lb ft)

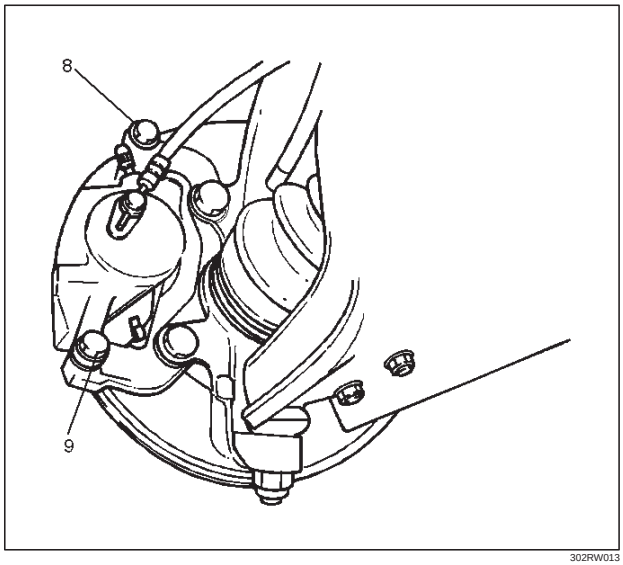

302RW013

6. Install brake flexible hose, always use new gaskets and be sure to put the hooked edge of the flexible hose end into the anti–rotation cavity then tighten the I–bolt (10) to the specified torque.

Torque: 35 N·m (26 lb ft)

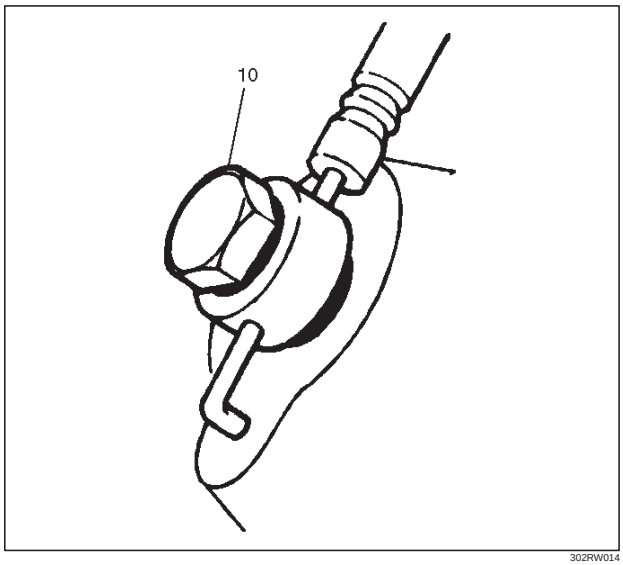

302RW014

7. Install wheel and tire assembly, refer to “Wheels and Tires System” in Section 3E.
8. Bleed brakes. Refer to “Hydraulic Brakes” in this section.

Downloaded from www.Manualslib.com manuals search engine

Front Disc Brake Caliper

Front Disc Brake Caliper Disassembled View

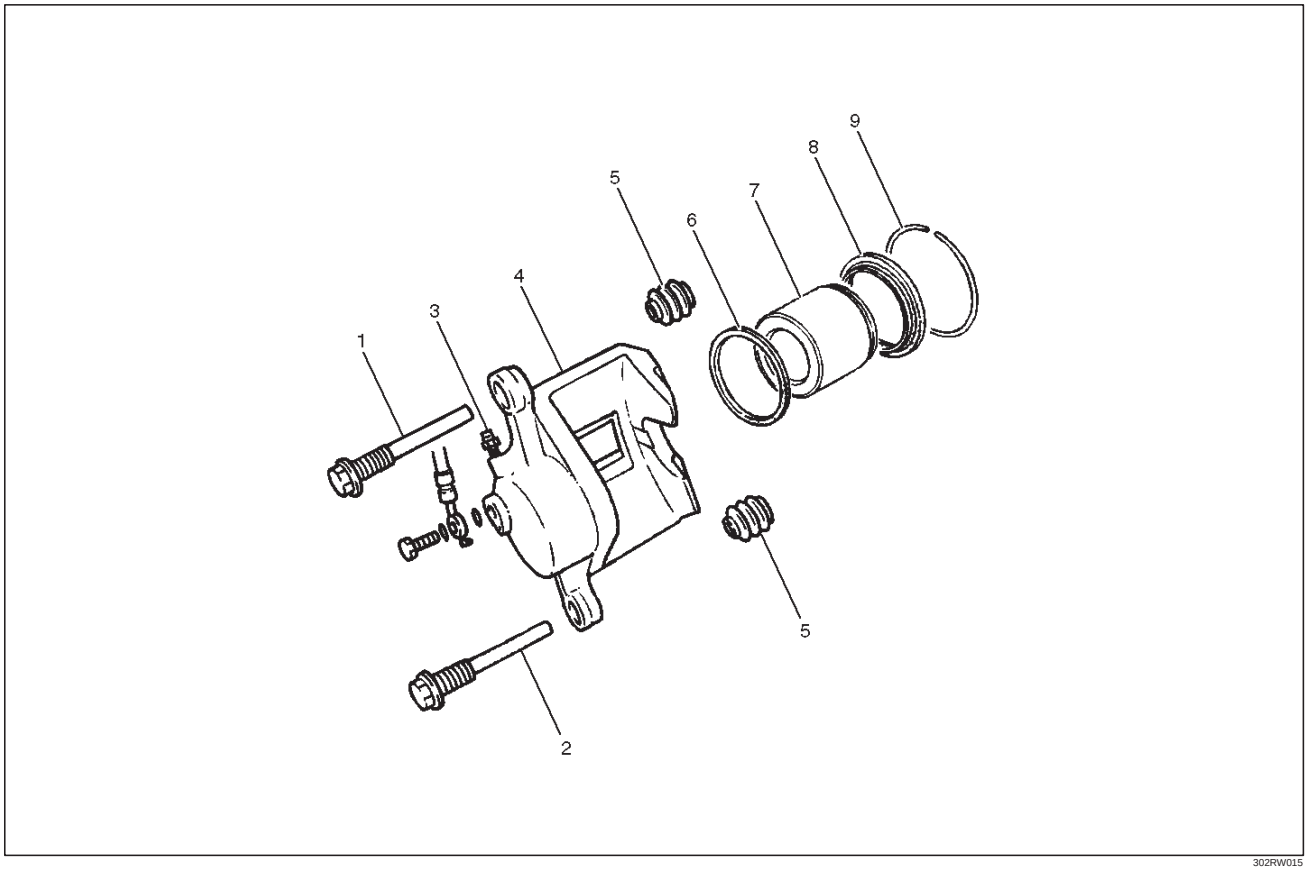

302RW015

Legend

(1) Guide Bolt
(2) Lock Bolt
(3) Bleeder with Cap
(4) Caliper Body
(5) Dust Boot: Guide Bolt and Lock Bolt
(6) Piston Seal
(7) Piston
(8) Dust Boot: Piston
(9) Dust Boot Ring

Disassembly

1. Remove guide bolt.
2. Remove lock bolt.
3. Remove dust boot: guide bolt and lock bolt.
4. Remove dust boot ring, using a small screwdriver, remove the dust boot ring.

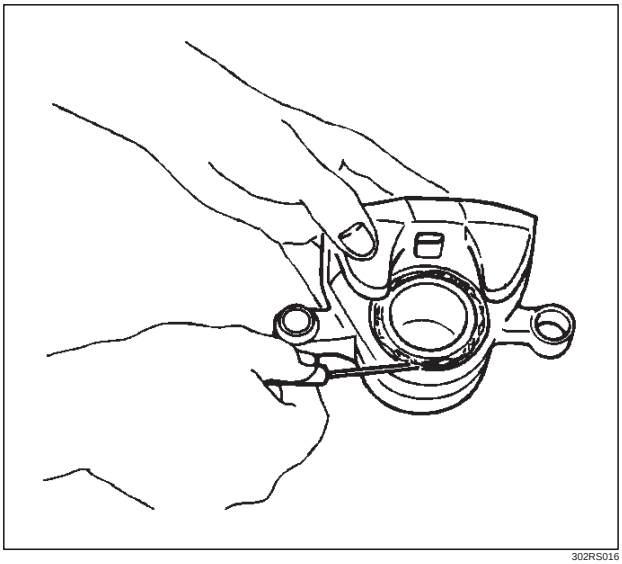

302RS016

Downloaded from www.Manualslib.com manuals search engine

5. Insert a block of wood into the caliper and force out the piston by blowing compressed air into the caliper at the flexible hose attachment. This procedure must be done prior to removal of the dust boot.

WARNING: DO NOT PLACE YOUR FINGERS IN FRONT OF THE PISTON IN AN ATTEMPT TO CATCH OR PROTECT IT WHEN APPLYING COMPRESSED AIR. THIS COULD RESULT IN PERSONAL INJURY.

CAUTION: Use just enough air to ease the piston out of the bore. If the piston is blown out, it may be damaged.

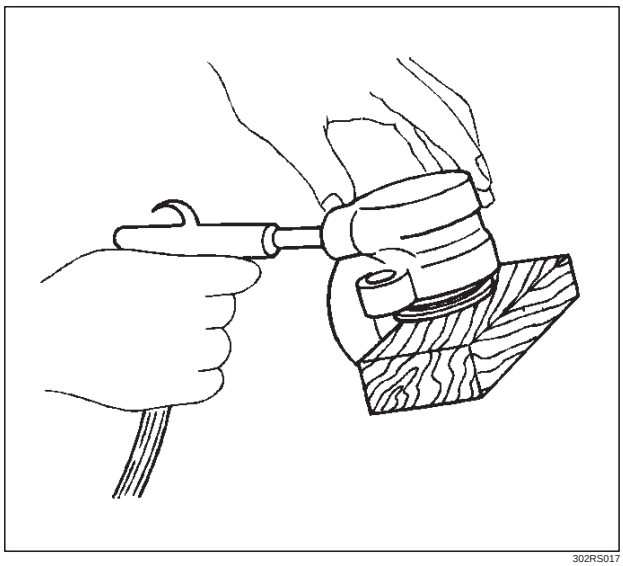

302RS017

6. Remove dust boot: piston.
7. Remove piston seal.
8. Remove bleeder with cap.
9. Remove caliper body.

Inspection and Repair

Make necessary parts replacement, if wear, damage, corrosion or any other abnormal conditions are found through inspection.
Check the following parts:

- Rotor
- Cylinder body
- Cylinder bore
- Piston
- Guide bolt, lock bolt
- Support bracket

NOTE: The piston seal, boot ring and dust boot are to be replaced each time the caliper is overhauled. Discard these used rubber parts and replace them with new ones.

Reassembly

1. Install caliper body.
2. Install bleeder with cap and tighten the cap to the specified torque.

   Torque: 8 N·m (69 lb in)

3. Install piston seal and apply special rubber grease to the piston seal and cylinder wall, then insert the piston seal into the cylinder. The special rubber grease is included in the repair kit.

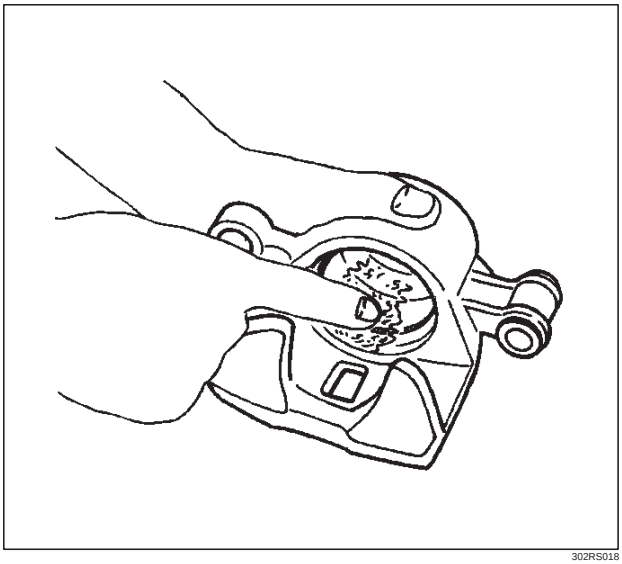

302RS018

4. Install piston.
5. Install piston dust boot; when inserting the piston into the cylinder, use finger pressure only and do not use a mallet or other impact tool, since damage to the cylinder wall or piston seal can result.

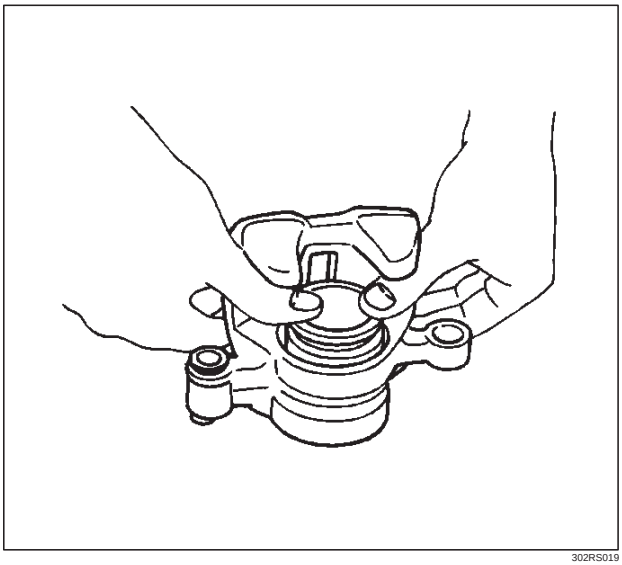

302RS019

Downloaded from www.Manualslib.com manuals search engine

6. Install dust boot ring and apply special grease (approximately 1 g) to the piston and attach the dust boot to the piston and caliper. Insert the dust boot ring into the dust boot.

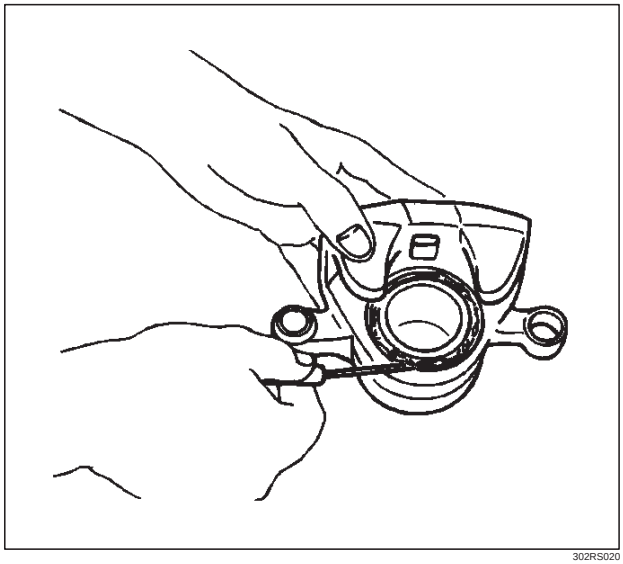

302RS020

7. Install guide bolt and lock bolt dust boot.
8. Install lock bolt and guide bolt and tighten the bolt to the specified torque.

Torque: 74 N·m (54 lb ft)

9. Install the dust boot on the support bracket after applying special grease (approximately 1 g) onto the dust boot inner surface. Apply special grease onto the lock bolt and guide bolt setting hole of the support bracket.

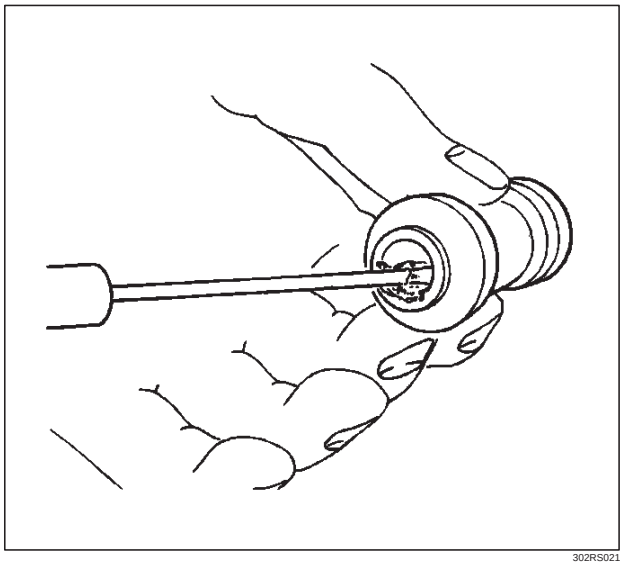

302RS021

Downloaded from www.Manualslib.com manuals search engine

Main Data and Specifications

General Specifications

Type	Floating, pin slide
Pad dimension	55 cm^2 (8.52 in^2)
Adjusting method	Self–adjusting
Piston diameter	60.33 mm (2.38 in)
Disc type	Ventilated
Disc thickness	26 mm (1.02 in)
Disc effective diameter	222 mm (8.74 in)

Torque Specifications

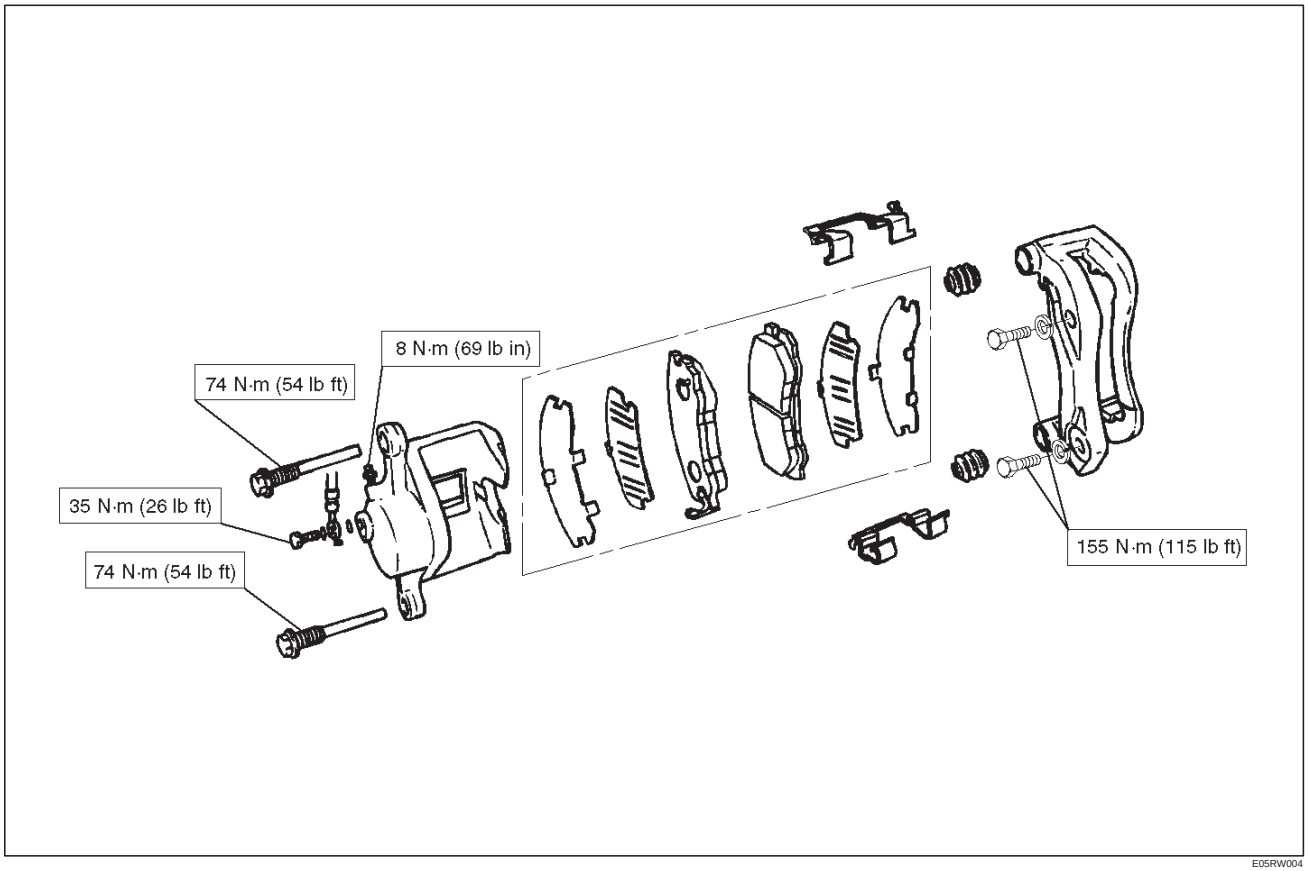

E05RW004

Downloaded from www.Manualslib.com manuals search engine

Rear Disc Brake Pads

Brake Pads Inspection

Check the outer pads by looking at each caliper from above. Check the thickness on the inner pad by looking down through the inspection hole in the top of the caliper. Whenever the pad is worn to about the thickness of the pad base, the pad should be removed for further measurements. The pad should be replaced anytime the pad thickness (1) is worn to within 1.0 mm (0.039 in) of the pad itself.
The disc pads have a wear indicator that makes a noise when the pad wears to where replacement is required.

Minimum limit (1): 1.0 mm (0.039 in)

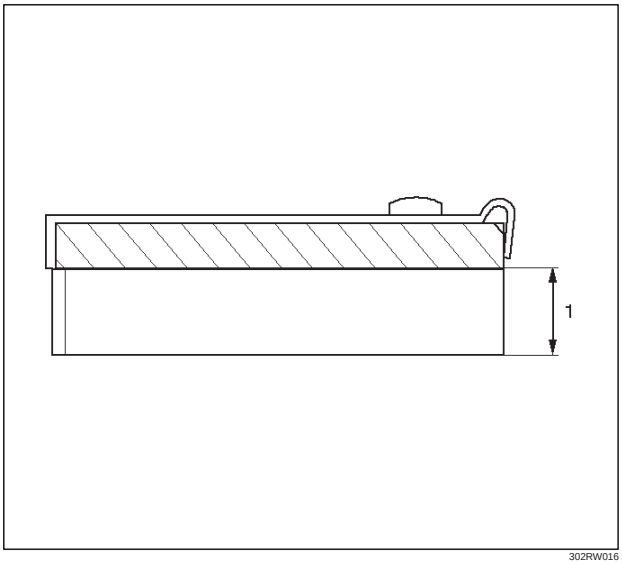

302RW016

Brake Pads and Associated Parts

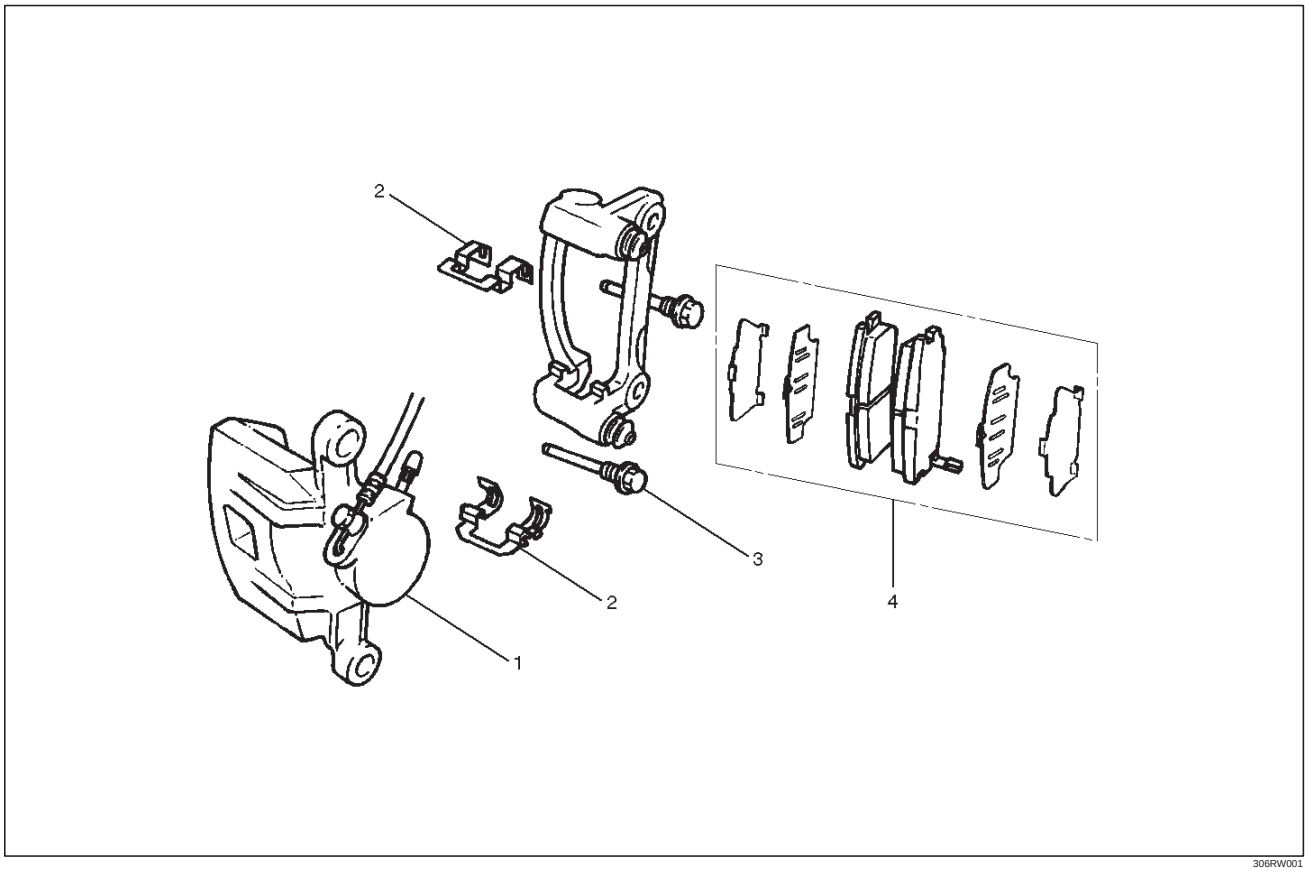

306RW001

Legend

(1) Caliper Assembly
(2) Clip
(3) Lock Bolt
(4) Pad Assembly

Downloaded from www.Manualslib.com manuals search engine

Removal

NOTE: If a squealing noise occurs from the rear brake while driving, check the pad wear indicator plate. If the indicator plate contacts the rotor, the disc pad assembly should be replaced.

- Draw out two–thirds of the brake fluid from the reservoir.
- Raise the vehicle and support it with suitable safety stands.

1. Remove wheel and tire assembly, refer to “Wheels and Tires System” in Section 3E.
2. Remove lock bolt (1)

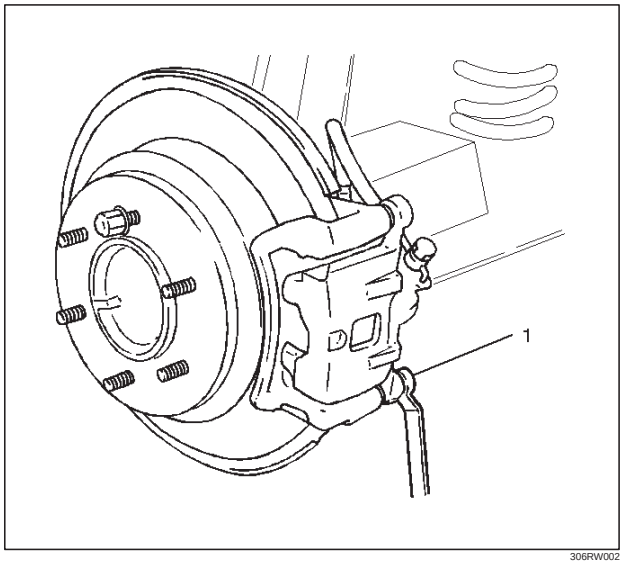

306RW002

3. Remove caliper assembly and support the caliper assembly so that the brake hose is not stretched or damaged.
4. Remove pad assembly with shim.
5. Remove clip.

Installation

1. Install clip (2).

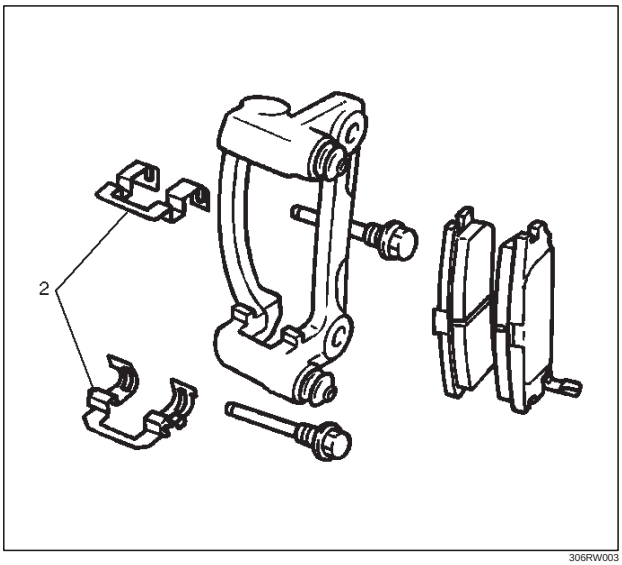

306RW003

2. Install pad assembly with shim and apply special grease (approximately 0.2 g) to both contacting surfaces of the inner shims. Wipe off extruded grease after installing.

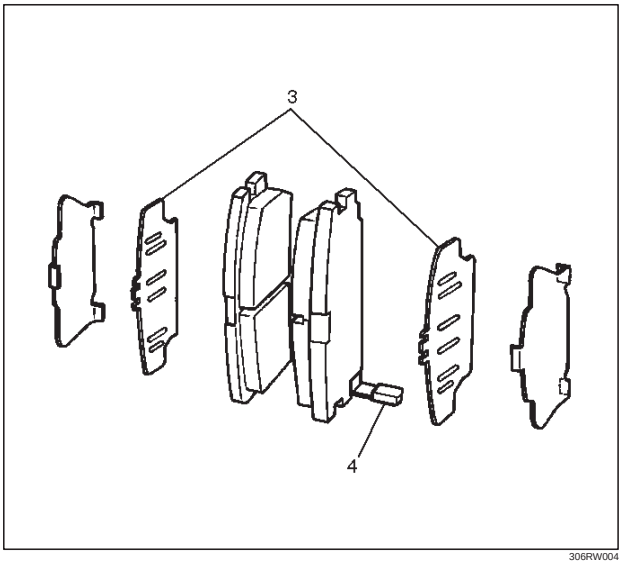

306RW004

Legend

(3) Inner Shim
(4) Wear Indicator

Downloaded from www.Manualslib.com manuals search engine

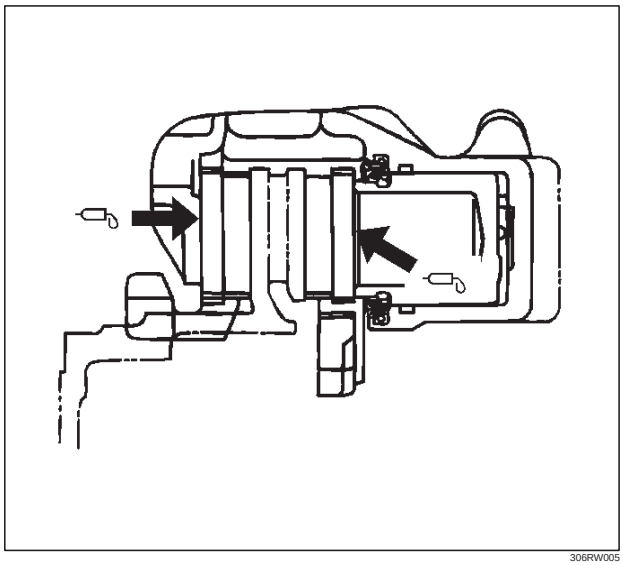

306RW005

3. Install caliper assembly, use adjustable pliers to bottom the piston into the caliper bore. Be careful not to damage the piston dust boot and do not damage the flexible hose by twisting or pulling it.

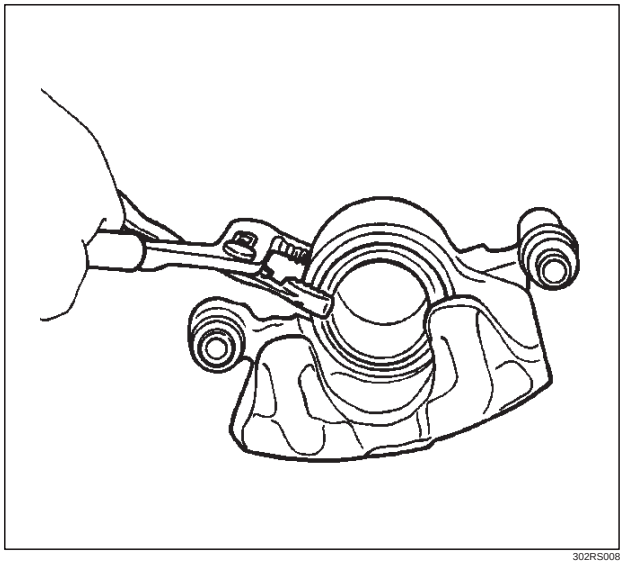

302RS008

4. Install lock bolt (5) and tighten the bolt to the specified torque.

Torque: 44 N·m (32 lb ft)

5. Install wheel and tire assembly, refer to “Wheels and Tires System” in Section 3E.
6. Pump the brake pedal several times to make sure that the pedal is firm. Check the brake fluid level in the reservoir after pumping the brakes.

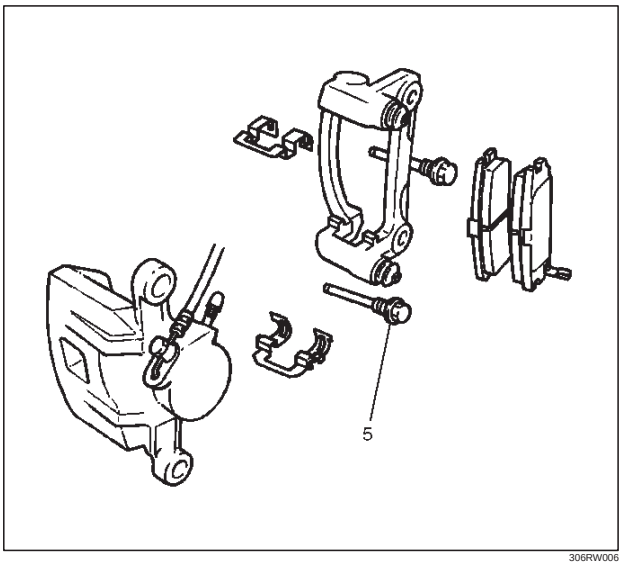

306RW006

Downloaded from www.Manualslib.com manuals search engine

Rear Disc Brake Rotor

Inspection

In the manufacturing of the brake rotor, all the tolerances regarding surface finish, parallelism and lateral runout are held very closely. Maintaining these tolerances provides the surface necessary to assure smooth brake operation.

Lateral Runout

Lateral runout is the movement of the rotor from side to side as it rotates on the spindle. This could also be referred to as “rotor wobble”.
This movement causes the piston to be knocked back into its bore. This results in additional pedal travel and a vibration during braking.

Checking Lateral Runout

1. Adjust the wheel bearing correctly, refer to “Differential” in Section 4A.
2. Attach a dial indicator to some portion of the suspension so that the stem contacts the rotor face about 29 mm (1.14 in) from the rotor edge.
3. Move the rotor one complete rotation.
   1. The lateral runout should not exceed 0.13 mm (0.005 in)

Maximum runout: 0.13 mm (0.005 in)

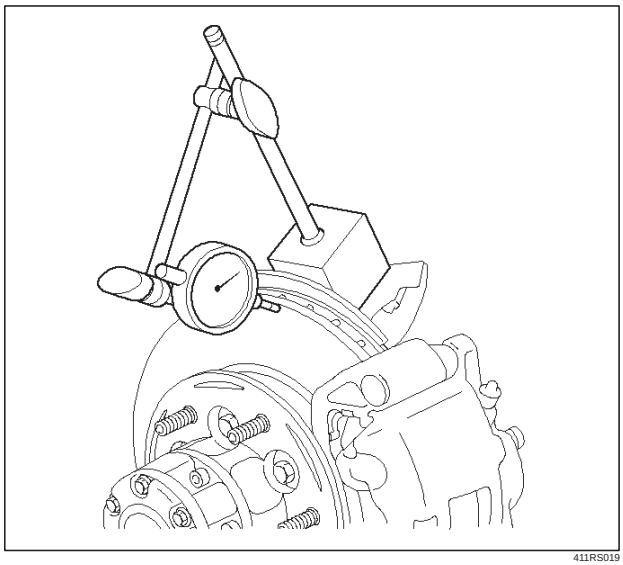

411RS019

Parallelism

Parallelism is the measurement of thickness of the rotor at four or more points around the circumference of the rotor. All measurements must be made 22 mm (0.87 in) from the edge of the rotor.

The rotor thickness must not vary more than 0.010 mm (0.0004 in) from point to point.

Maximum parallelism: 0.001 mm (0.0004 in)

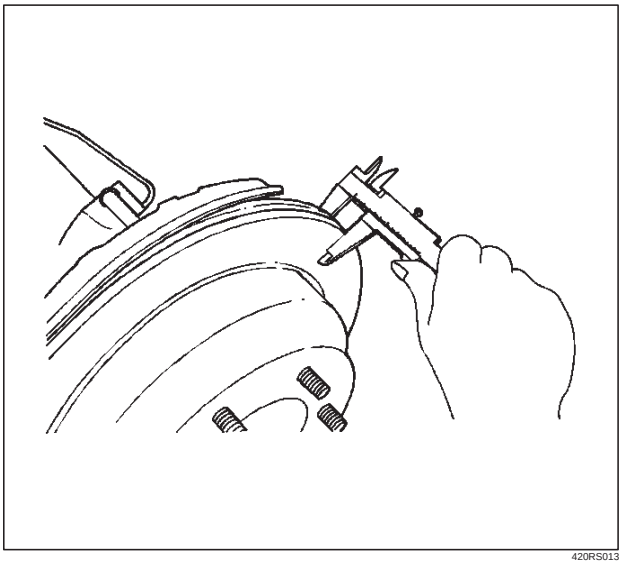

420RS013

Replacing Brake Rotors

When installing new brake rotors, do not refinish the surfaces. These parts are at the correct level of surface finish.

Refinishing Brake Rotors

Accurate control of the rotor tolerances is necessary for proper performance of the disc brakes. Machining of the rotor should be done only with precision equipment. All brake rotors have a minimum thickness dimension cast into them. This dimension is the minimum wear dimension and not a refinish dimension. The minimum wear dimension is 16.6 mm (0.654 in). The minimum refinish dimension is 16.97 mm (0.668 in).
When refinishing rotors, always use sharp cutting tools or bits. Dull or worn tools leave a poor surface finish which will affect initial braking performance. Vibration dampening attachments should always be used when refinishing braking surfaces. These attachments eliminate tool chatter and will result in better surface finish.

Downloaded from www.Manualslib.com manuals search engine

After refinishing, replace any rotor that does not meet the minimum thickness of 16.97 mm (0.668 in). Do not use a brake rotor that will not meet the specification.

Minimum wear dimension: 16.6 mm (0.654 in)

Refinish dimension: 16.97 mm (0.668 in)

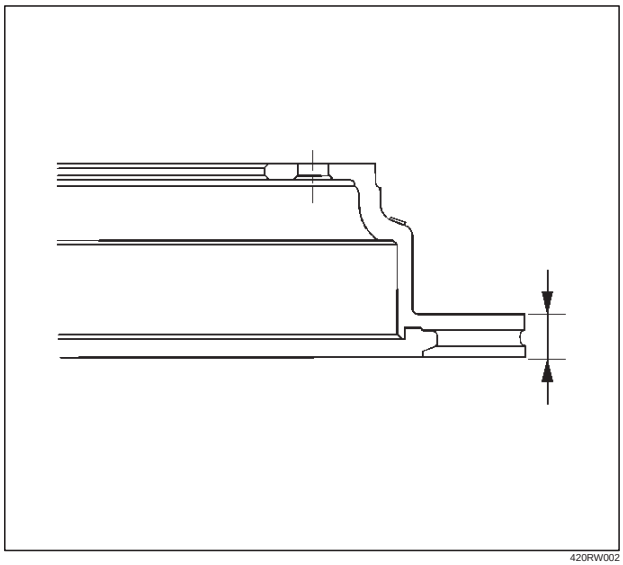

420RW002

Rear Drum (In Disc) Inside Diameter Check

Check the rear drum inside diameter by measuring at more than two portions as shown in the illustration.
If the inside diameter is greater than the limit, replace the rear rotor.

Standard: 210.0 mm (8.27 in)

Limit: 211.4 mm (8.32 in)

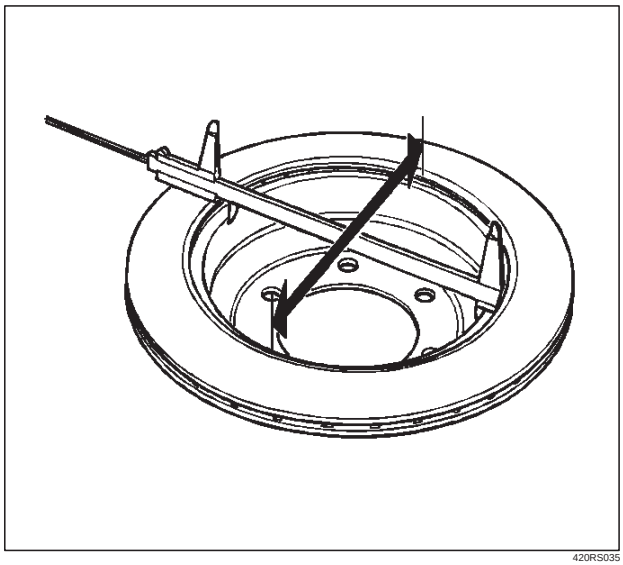

420RS035

Downloaded from www.Manualslib.com manuals search engine

Rear Disc Brake Caliper Assembly

Rear Disc Brake Caliper Assembly and Associated Parts

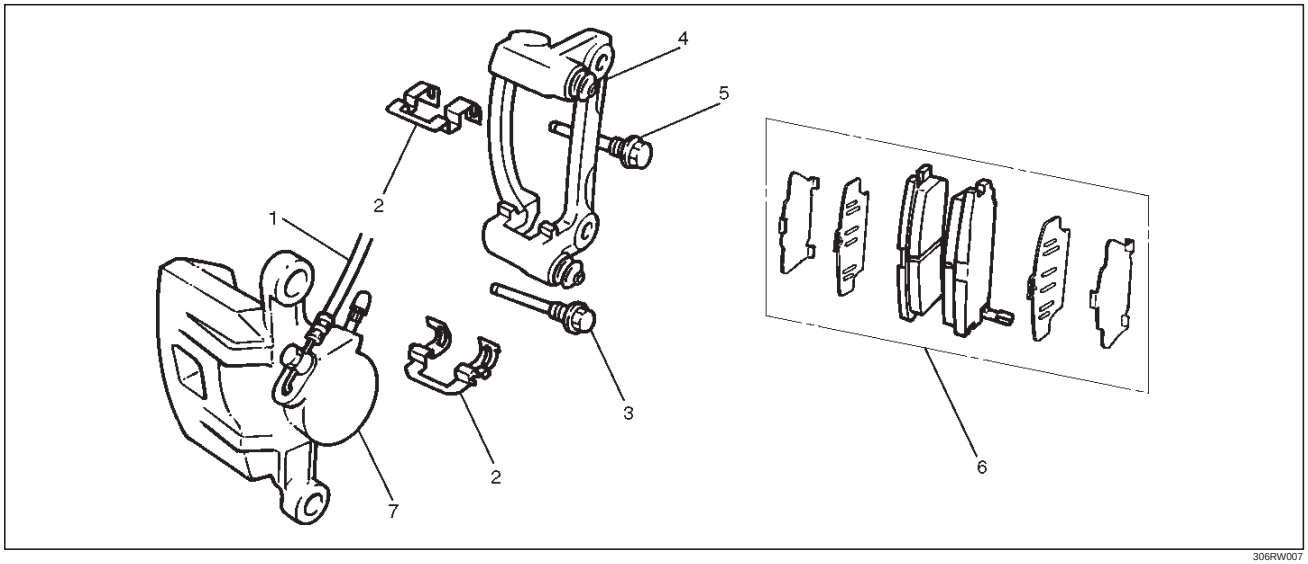

306RW007

Legend

(1) Brake Flexible Hose
(2) Clip
(3) Lock Bolt
(4) Support Bracket
(5) Guide Bolt
(6) Pad Assembly with Shim
(7) Caliper Assembly

Removal

1. Raise the vehicle and support with suitable safety stands.
2. Remove wheel and tire assembly, refer to “Wheels and Tires System” in Section 3E.
3. Remove the bolt and gaskets, then disconnect the flexible hose from the caliper and after disconnecting the flexible hose (1), cap or tape the openings to prevent entry of foreign material.

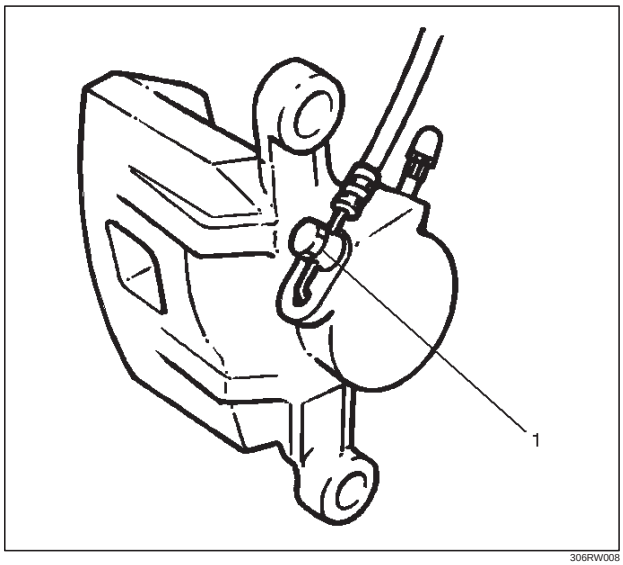

306RW008

4. Since the brake fluid flows out from the connecting coupler, place a drain pan under the vehicle.
5. Remove lock bolt (2).
6. Remove guide bolt (3).

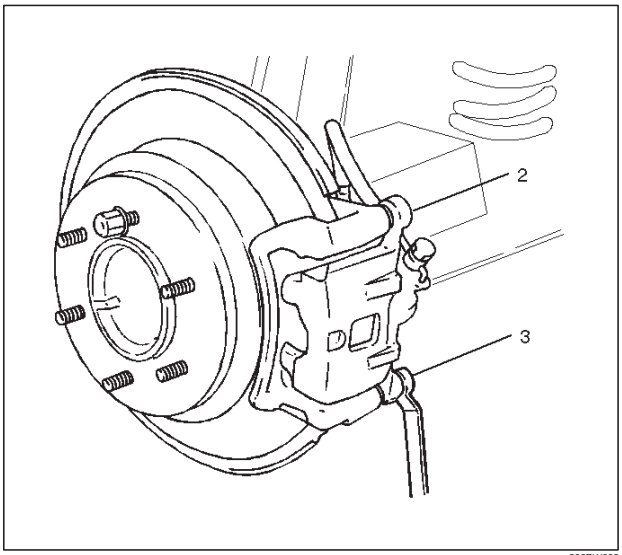

306RW009

7. Remove caliper assembly.
8. Remove support bracket with pad assembly and take care not to damage the flexible brake hose when removing the support bracket.
9. Remove pad assembly (with shim) and mark the lining locations if they are to be reinstalled.

Downloaded from www.Manualslib.com manuals search engine

10. Remove clip.

Installation

1. Install clip (4).

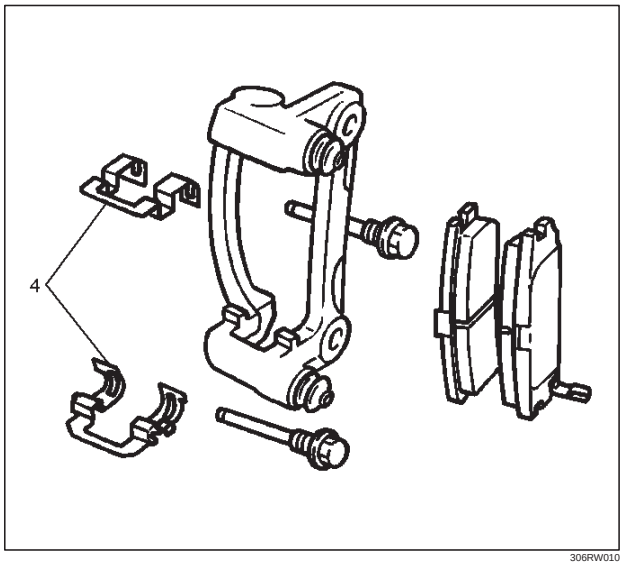

306RW010

2. Install pad assembly (with shim) and apply special grease (approximately 0.2 g) to both contacting surfaces of the inner shims (5). Wipe off extruded grease after installing.

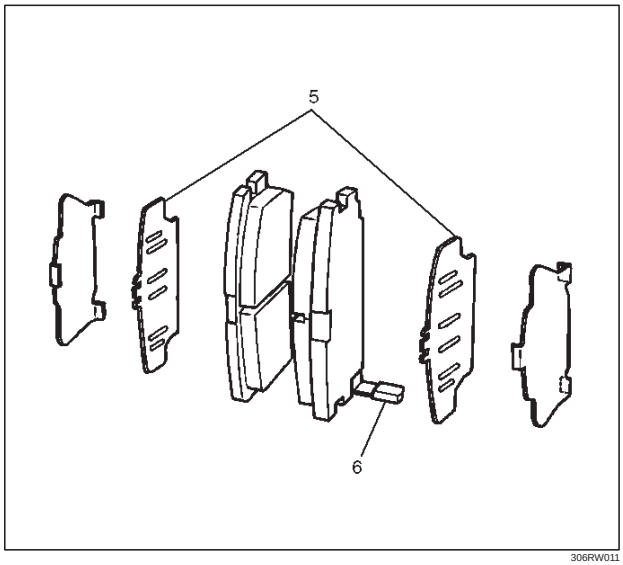

306RW011

Legend

(5) Inner Shim
(6) Wear indicator

3. Install support bracket and tighten the bolt (7) to the specified torque.

Torque: 103 N·m (76 lb ft)

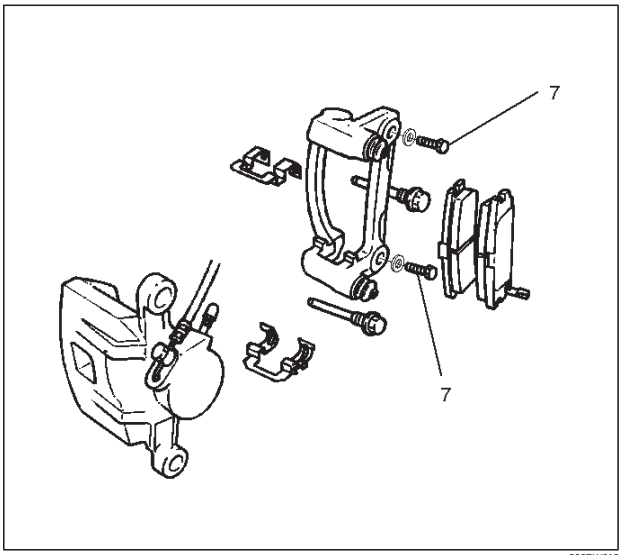

306RW012

4. Install caliper assembly.
5. Install lock bolt and guide bolt (8) and tighten the bolt to the specified torque.

Torque: 44 N·m (32 lb ft)

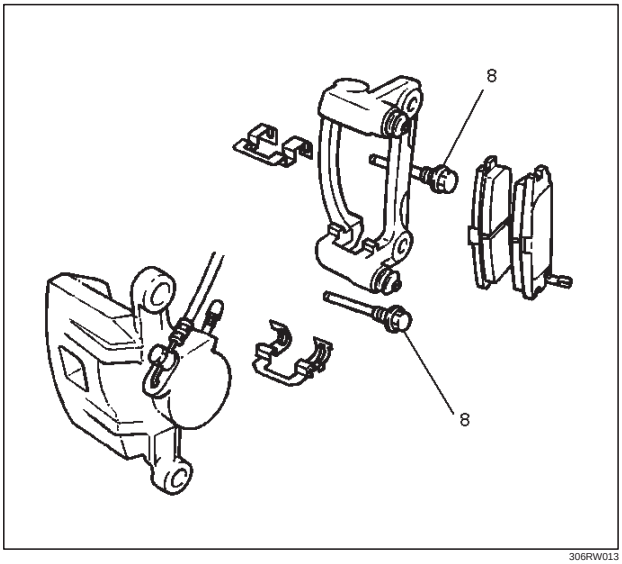

306RW013

Downloaded from www.Manualslib.com manuals search engine

6. Install brake flexible hose, always use new gaskets and be sure to put the hooked edge of the flexible hose end into the anti–rotation cavity then tighten the I–bolt (9) to the specified torque.

Torque: 35 N·m (26 lb ft)

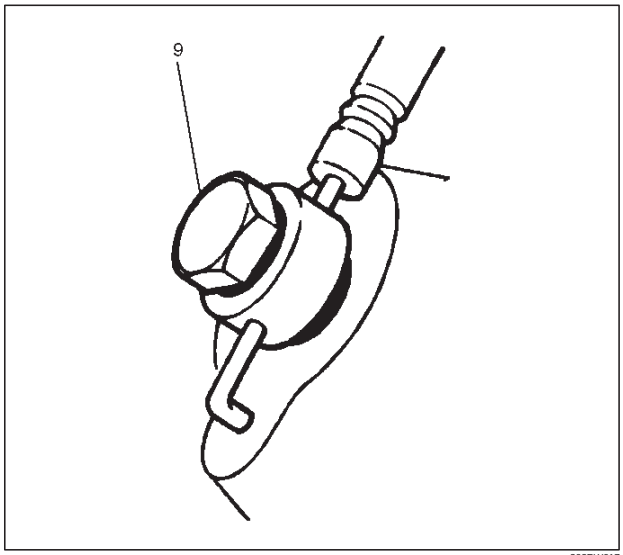

302RW017

7. Install the wheel and tire assembly, refer to “Wheels and Tires System” in Section 3E.
8. Bleed brakes. Refer to “Hydraulic Brakes” in this section.

Downloaded from www.Manualslib.com manuals search engine

Rear Disc Brake Caliper

Rear Disc Brake Caliper Disassembled View

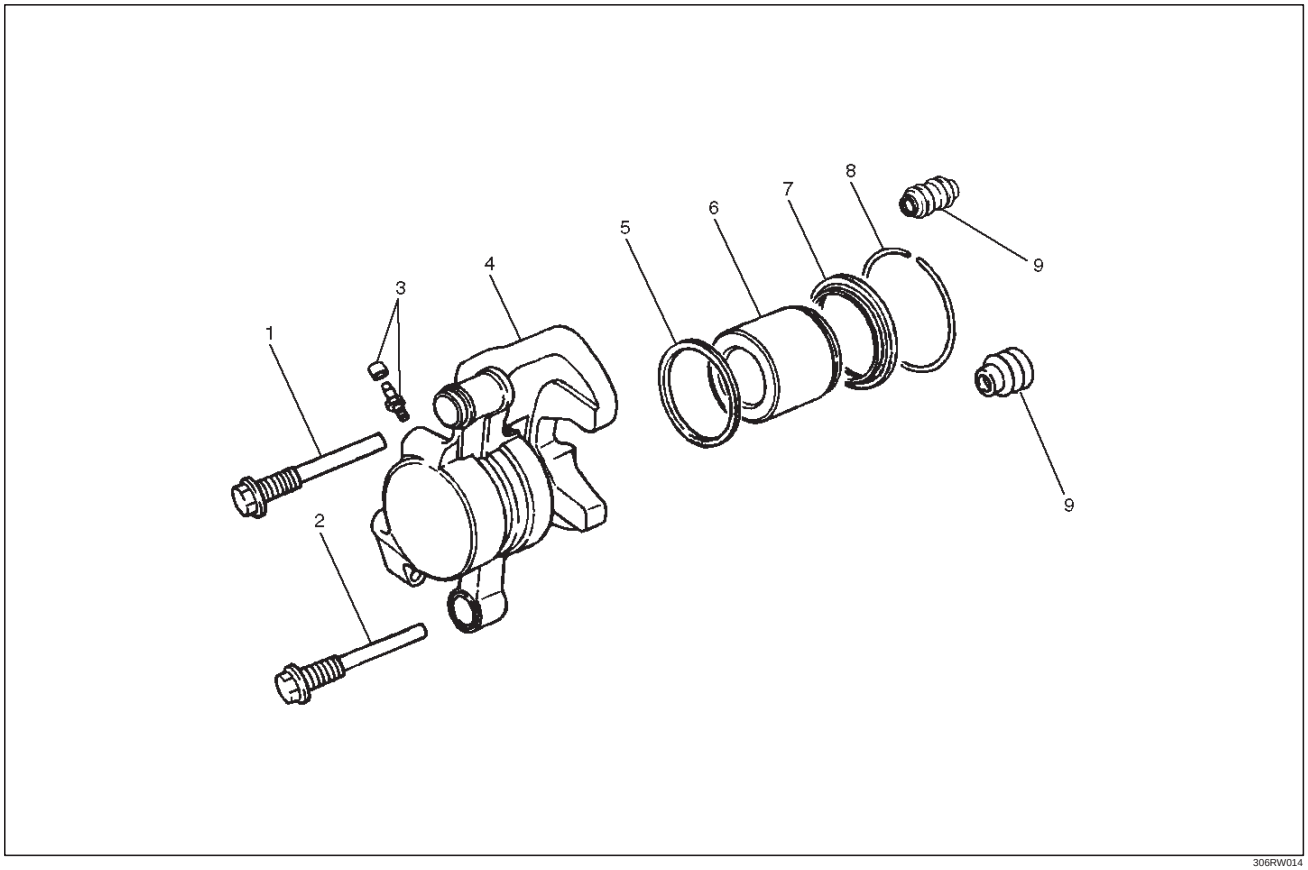

306RW014

Legend

(1) Guide Bolt
(2) Lock Bolt
(3) Bleeder with Cap
(4) Caliper Body
(5) Piston Seal
(6) Piston
(7) Dust Boot: Piston
(8) Dust Boot Ring
(9) Dust Boot: Guide Bolt and Lock Bolt

Disassembly

1. Remove guide bolt.
2. Remove lock bolt.
3. Remove dust boot; guide bolt and lock bolt.
4. Remove the dust boot ring using a small screwdriver.

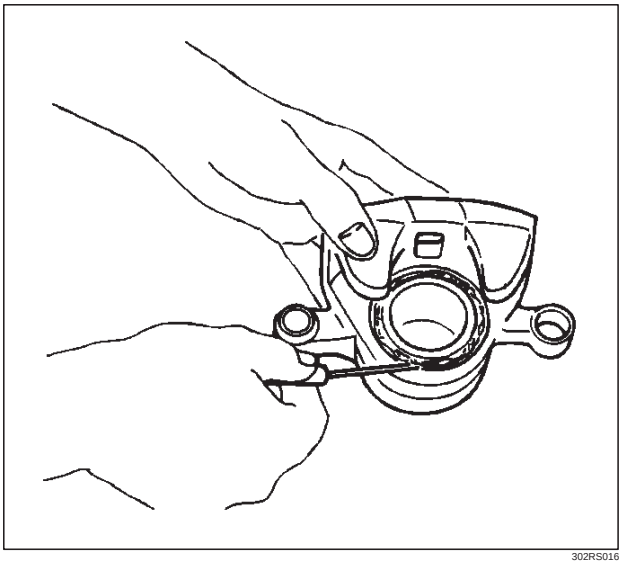

302RS016

Downloaded from www.Manualslib.com manuals search engine

5. Insert a block of wood into the caliper and force out the piston by blowing compressed air into the caliper at the flexible hose attachment. This procedure must be done prior to removal of the dust boot.

WARNING: DO NOT PLACE YOUR FINGERS IN FRONT OF THE PISTON IN AN ATTEMPT TO CATCH OR PROTECT IT WHEN APPLYING COMPRESSED AIR. THIS COULD RESULT IN PERSONAL INJURY.

CAUTION: Use just enough air to ease the piston out of the bore. If the piston is blown out, it may be damaged.

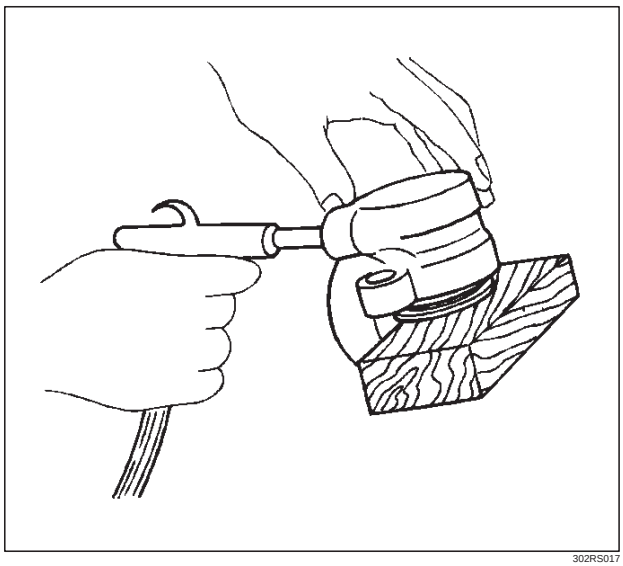

302RS017

6. Remove dust boot: piston.
7. Remove piston seal.
8. Remove bleeder with cap.
9. Remove caliper body.

Inspection and Repair

Make necessary parts replacement, if wear, damage, corrosion or any other abnormal conditions are found through inspection.
Check the following parts:

- Rotor
- Cylinder body
- Cylinder bore
- Piston
- Guide bolt, lock bolt
- Support bracket

NOTE: The piston dust seal and dust boot are to be replaced each time the caliper is overhauled. Discard these used rubber parts and replace with new ones.

Reassembly

1. Install caliper body.
2. Install bleeder with cap and tighten the cap to the specified torque.

   Torque: 8 N·m (69 lb ft)

3. Install piston seal and apply special rubber grease to the piston seal and cylinder wall, then insert the piston seal into the cylinder. The special rubber grease is included in the repair kit.

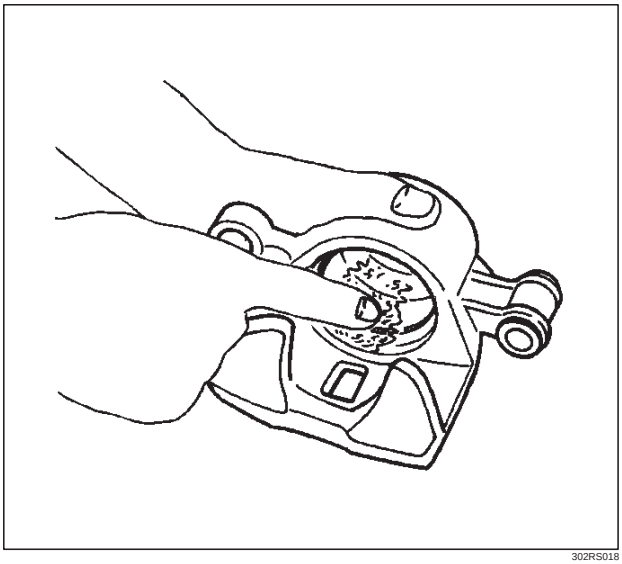

302RS018

4. Install piston.
5. Install piston dust boot; when inserting the piston into the cylinder, use finger pressure only and do not use a mallet or other impact tool, since damage to the cylinder wall or piston seal can result.

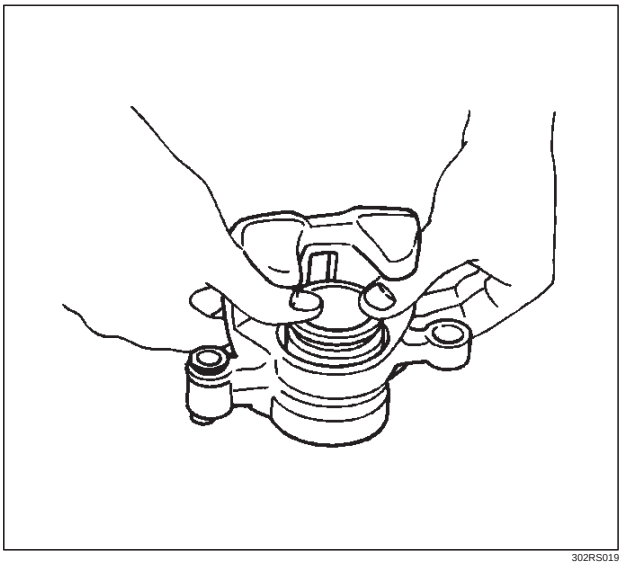

302RS019

Downloaded from www.Manualslib.com manuals search engine

6. Install dust boot ring and apply special grease (approximately 1g) to the piston and attach the dust boot to the piston and caliper. Insert the dust boot ring into the dust boot.

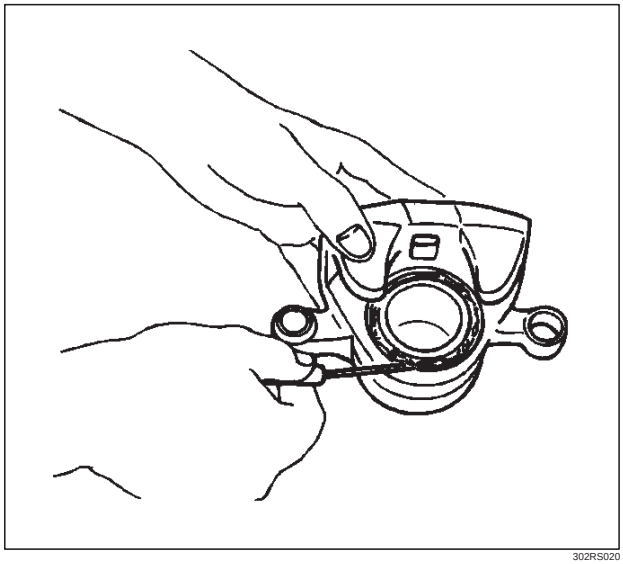

302RS020

7. Install guide bolt and lock bolt dust boot.
8. Install lock bolt and guide bolt and tighten the bolt to the specified torque.

Torque: 74 N·m (54 lb ft)

9. Install the dust boot on the support bracket after applying special grease (Approx. 1g) onto the dust boot inner surface. Also apply special grease onto the lock bolt and guide bolt setting hole of the support bracket.

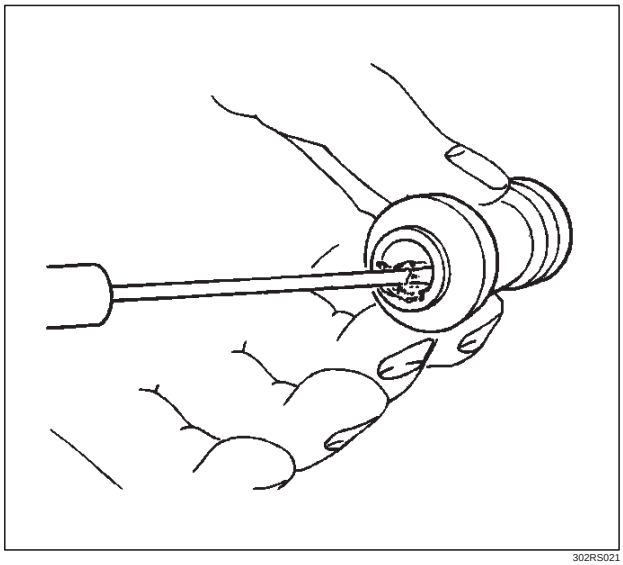

302RS021

Downloaded from www.Manualslib.com manuals search engine

Main Data and Specifications

General Specifications

Type	Floating, pin slide
Pad dimension	33 cm^2 (5.11 in^2)
Adjusting method	Self–adjusting
Piston diameter	41.3 mm (1.63 in)
Disc type	Ventilated
Disc thickness	18 mm (0.71 in)
Disc effective diameter	269.2 mm (10.60 in)

Torque Specifications

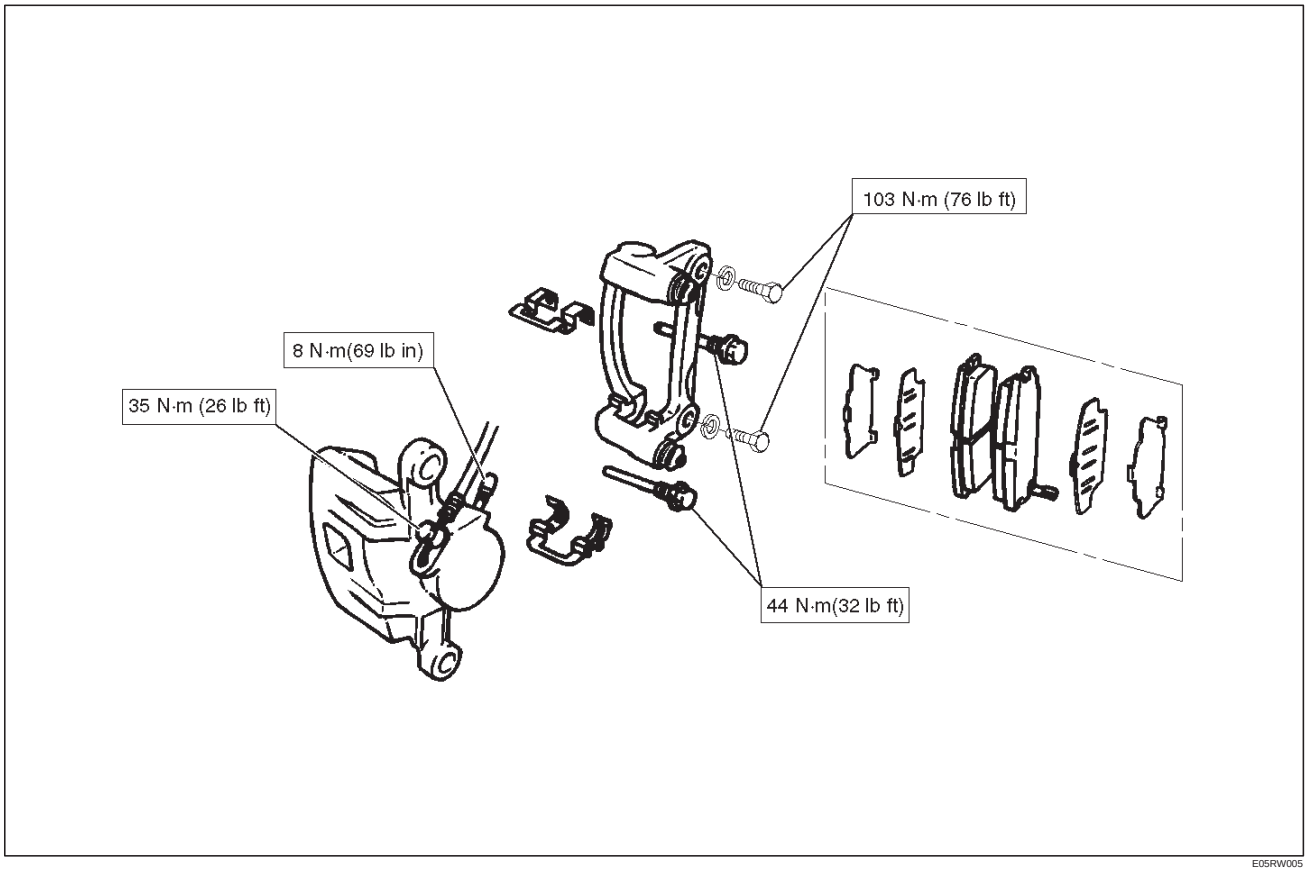

E05RW005

Downloaded from www.Manualslib.com manuals search engine

TROOPER

BRAKES

PARKING BRAKE SYSTEM

CONTENTS

Service Precaution 5D–1
General Description 5D–1
Operation 5D–2
Parking Brake Lever and Front Cable 5D–3
Parking Brake Lever, Front Cable and Associated Parts 5D–3
Removal 5D–3
Installation 5D–4
Parking Brake Rear Cable 5D–5
Parking Brake Rear Cable and Associated Parts 5D–5
Removal 5D–5
Installation 5D–6
Inspection and Repair 5D–7
Parking Brake Adjustment 5D–7
Main Data and Specifications 5D–8

Service Precaution

WARNING: THIS VEHICLE HAS A SUPPLEMENTAL RESTRAINT SYSTEM (SRS). REFER TO THE SRS COMPONENT AND WIRING LOCATION VIEW IN ORDER TO DETERMINE WHETHER YOU ARE PERFORMING SERVICE ON OR NEAR THE SRS COMPONENTS OR THE SRS WIRING. WHEN YOU ARE PERFORMING SERVICE ON OR NEAR THE SRS COMPONENTS OR THE SRS WIRING, REFER TO THE SRS SERVICE INFORMATION. FAILURE TO FOLLOW WARNINGS COULD RESULT IN POSSIBLE AIR BAG DEPLOYMENT, PERSONAL INJURY, OR OTHERWISE UNNEEDED SRS SYSTEM REPAIRS.

CAUTION: Always use the correct fastener in the proper location. When you replace a fastener, use ONLY the exact part number for that application. ISUZU will call out those fasteners that require a replacement after removal. ISUZU will also call out the fasteners that require thread lockers or thread sealant. UNLESS OTHERWISE SPECIFIED, do not use supplemental coatings (Paints, greases, or other corrosion inhibitors) on threaded fasteners or fastener joint interfaces. Generally, such coatings adversely affect the fastener torque and the joint clamping force, and may damage the fastener. When you install fasteners, use the correct tightening sequence and specifications. Following these instructions can help you avoid damage to parts and systems.

General Description

Pulling up the parking brake lever by hand will set the parking brake. Once pulled up, the lever is held by a ratchet–type lock until it is released. The position of the lever is transmitted through cable/lever systems to the rear wheels. These parts are designed in order to obtain sufficient braking force when parking on slopes. When the parking brake is set, or when the ignition switch is in the “ON” position, the brake warning light illuminates.
The rear wheel parking brake is a duo–servo brake (mechanical inside expansion type) built into the rear disc brake. Parking brake adjustment is made through the adjusting hole bored through the back plate. Adjust the parking brake lever stroke to six or seven notches. Refer to “Parking Brake Adjustment” in this Section.

Downloaded from www.Manualslib.com manuals search engine

Operation

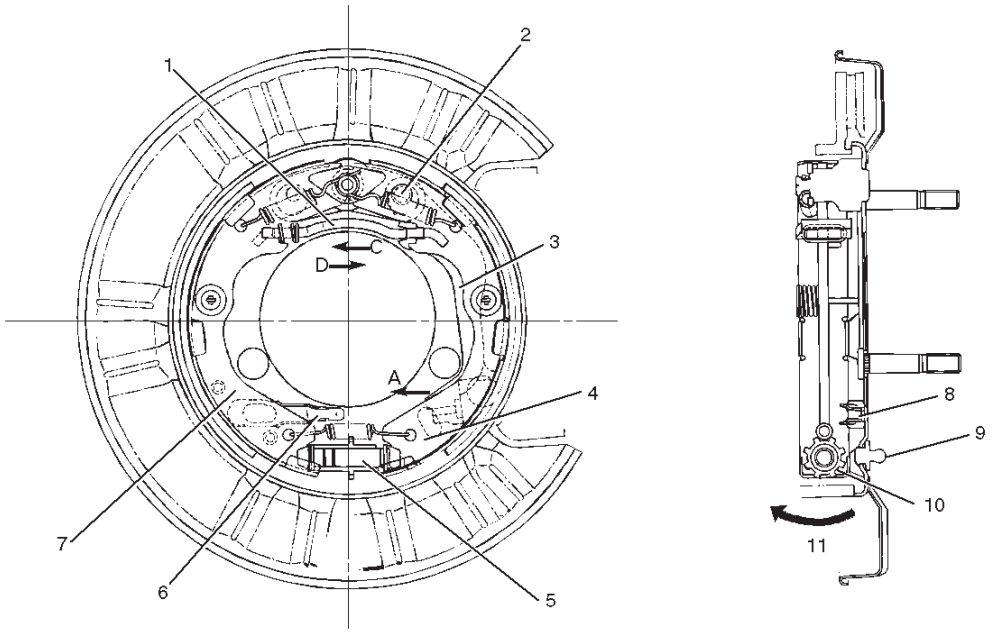

C05RW003

Legend

(1) Strut
(2) Fulcrum B
(3) Parking Lever
(4) Secondary Shoe
(5) Adjusting Screw Notch
(6) Parking Cable Guide
(7) Primary Shoe
(8) Parking Brake Cable Guide
(9) Adjusting Hole Plug
(10) Adjusting Screw Notch
(11) Shoe Expanding Direction

When pulled in the direction “A”, the parking lever presses the secondary shoe against the brake drum using the lever/shoe joint “B” as a fulcrum and pushes the strut in the direction “C”. The strut ,in turn, presses the primary shoe against the brake drum. Counter force “D” to the primary shoe is transmitted again to the secondary shoe through the fulcrum “B”. The secondary shoe contacts the drum thereby producing braking effect. Clearance which may result from worn parking brake shoe lining can be adjusted by turning the adjusting screw. Refer to “Parking Brake Adjustment” in this Section.

Downloaded from www.Manualslib.com manuals search engine

Parking Brake Lever and Front Cable

Parking Brake Lever, Front Cable and Associated Parts

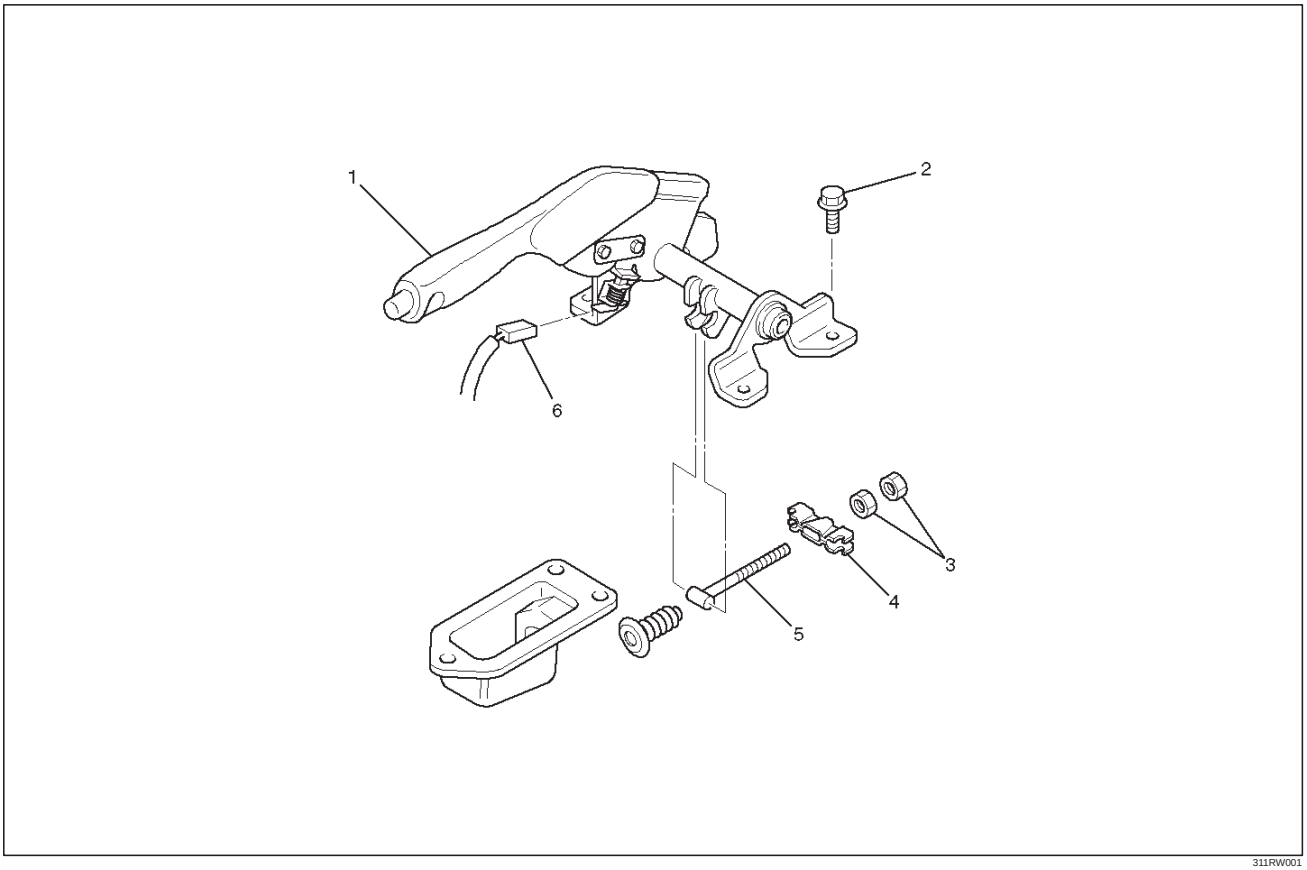

311RW001

Legend

(1) Parking Brake Lever
(2) Bolt
(3) Adjusting Nut
(4) Equalizer
(5) Parking Brake Front Cable
(6) Switch Connector

Removal

1. Remove adjusting nut (3).
2. Remove equalizer (4).

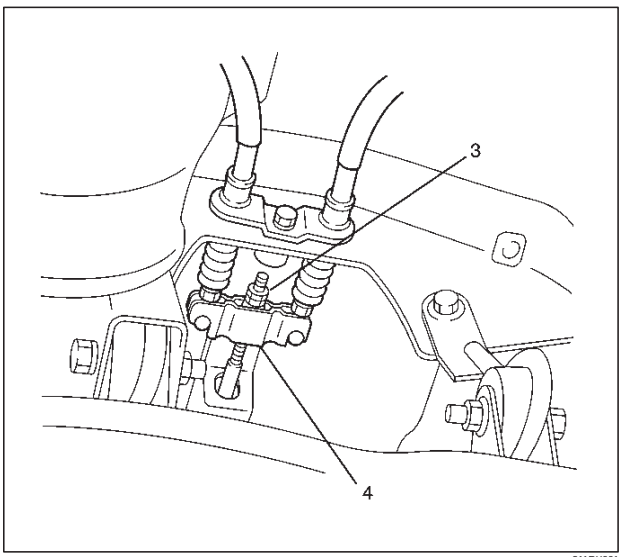

311RX001

Downloaded from www.Manualslib.com manuals search engine

3. Remove center console.
   (Refer to Section 10 “Body”.)
4. Remove bolts.
5. Disconnect switch connector.
6. Remove parking brake lever.
7. Remove parking brake front cable.

Installation

1. Install parking brake front cable.
2. Install parking brake lever and apply grease (BESCO L–2 or equivalent) to front cable contact point.
3. Reconnect switch connector.
4. Install bolts and tighten the parking brake lever fixing bolt to the specified torque.

   Torque : 15 N·m (11 lb ft)
5. Install center console.
   (Refer to Section 10 “Body”.)
6. Install equalizer.
7. Install adjusting nut and adjust the parking brake lever. (See “Parking Brake Adjustment” in this section.)

Downloaded from www.Manualslib.com manuals search engine

Parking Brake Rear Cable

Parking Brake Rear Cable and Associated Parts

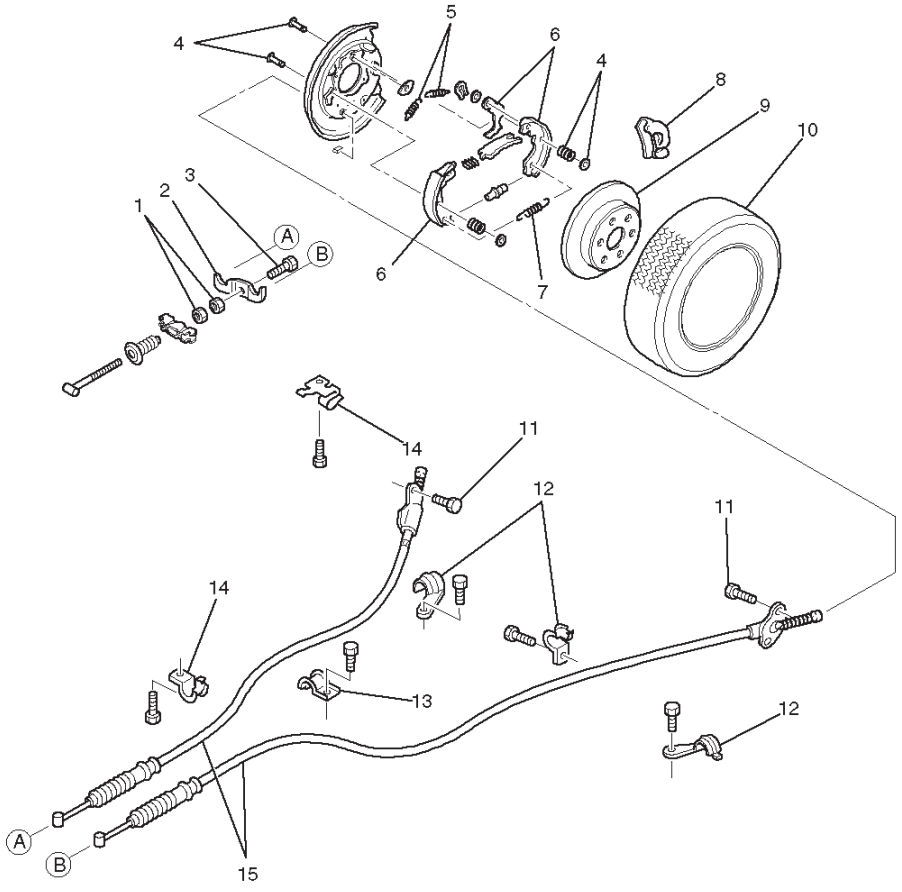

311RW003

Legend

(1) Adjust Nut
(2) Back Plate
(3) Bolt
(4) Holding Spring
(5) Return Spring; Upper
(6) Shoe Assembly
(7) Return Spring; Lower
(8) Caliper Assembly
(9) Rotor (Drum)
(10) Rear Wheels
(11) Cable Fixing Bolt
(12) Clip
(13) Clip
(14) Clip
(15) Rear Cable

Removal

1. Remove adjusting nut.
2. Remove rear wheels.
3. Remove caliper assembly, remove two bolts to remove the caliper assembly from the support bracket. (Refer to “Rear Disc Brakes in Disc Brakes” in Section 5C). Temporarily hang the caliper with a wire in order to avoid stretching the brake hose.
4. Remove rotor (drum).
5. Remove clip (floor side).

Downloaded from www.Manualslib.com manuals search engine

6. Remove bolt.
7. Remove back plate.
8. Remove clip (frame side).
9. Remove clip (suspension side).
10. Remove holding spring.
11. Remove return spring; upper.
12. Remove return spring; lower.
13. Remove the brake shoe assembly. Then remove the parking brake cable from the parking brake lever (1).

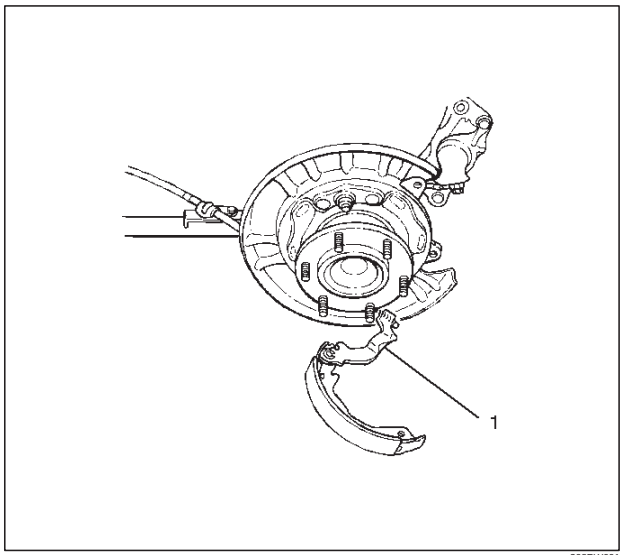

308RW001

14. Remove cable fixing bolt.
15. Remove rear cable.

Installation

1. Install rear cable and apply grease (BESCO L–2 or equivalent) to the connecting portion of the rear cable and the equalizer.
2. Install cable fixing bolt and tighten the cable fixing bolt to the specified torque.

   Torque: 6 N·m (52 lb in)

3. Install shoe assembly and after installation of the shoe and cable assembly, apply the special grease included in the repair kit to the portions indicated in the illustration.

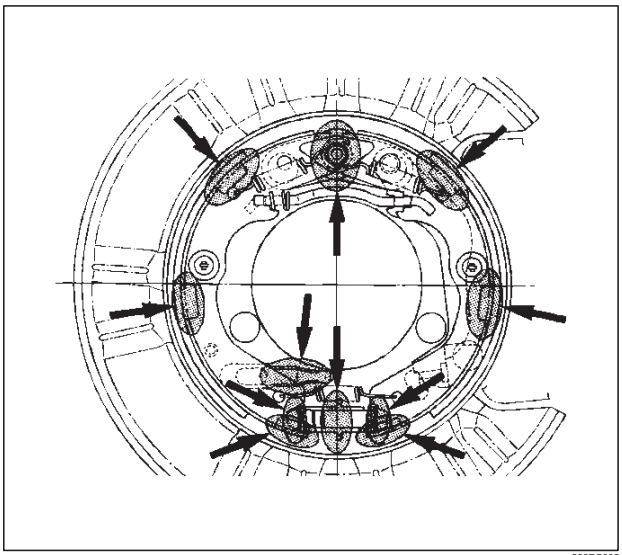

308RS002

4. Install return spring; lower.
5. Install return spring; upper and the parking brake lever (3) side (secondary side) return spring must be installed on the outer side (2) of the primary side return spring.

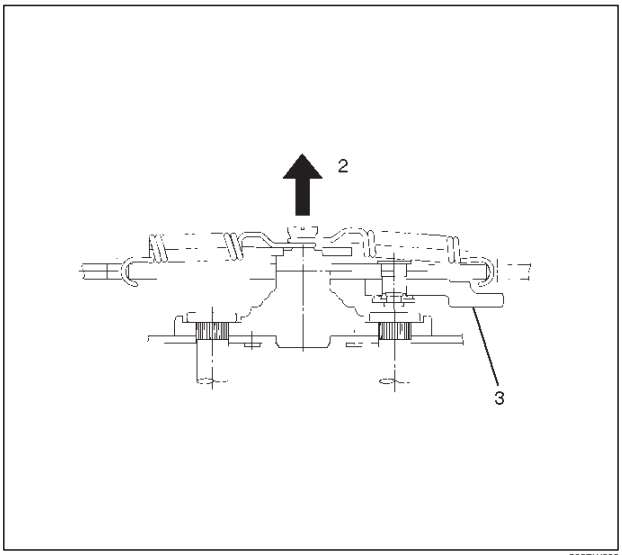

308RW002

6. Install holding spring.
7. Install clip (suspension side) and tighten the bolt to the specified torque.

   Torque: 7.8 N·m (68 lb in)

8. Install clip (frame side) and tighten the bolt to the specified torque.

   Torque: 15 N·m (11 lb in)

9. Install back plate.
10. Install bolt and tighten the bolt to the specified torque.

    Torque: 6 N·m (52 lb in)

11. Install clip (floor side) and tighten the bolt to the specified torque.

    Torque: 15 N·m (11 lb in)

12. Install rotor.

Downloaded from www.Manualslib.com manuals search engine

13. Install caliper assembly.
14. Install rear wheels.
15. Install adjusting nut and apply grease (BESCO L–2 or equivalent) to front cable contact point.
16. Tighten the adjusting nut to the specified torque and to adjust the parking brake, refer to “Parking Brake Adjustment” in this section.

Torque: 6 N·m (52 lb in)

Inspection and Repair

Parking Brake Lining Inspection

Check the shoe assemblies for wear by removing the brake drum rotor.
Replace the shoe assemblies if the lining thickness is less than 1.0 mm (0.039 in).

Minimum limit: 1.0 m (0.039 in)

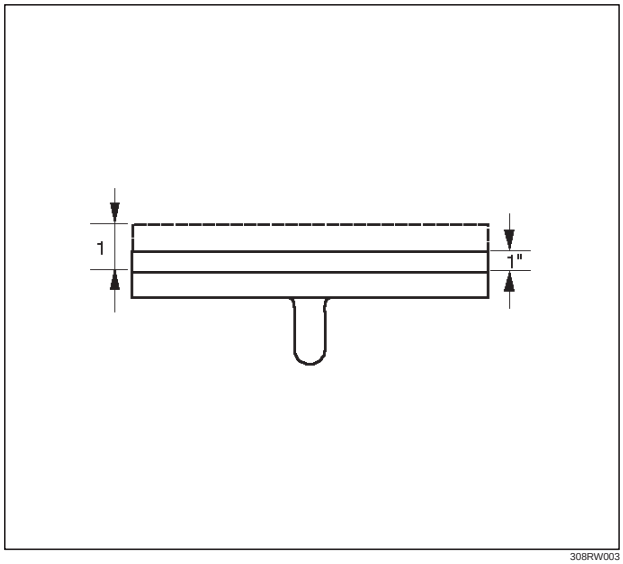

308RW003

Parking Brake Rotor (Drum) Inspection

Refer to “Rear Disc Brakes” in Section 5A2 for the inspection procedure of the rotor (drum).

Parking Brake Adjustment

1. Adjustment of parking brake assembly
   - Prior to lever stroke adjustment, adjust the rear brake shoe/rotor (drum) gap. Perform this procedure by loosening the adjusting nut of the equalizer.

   a. Remove the adjusting hole plug (rubber) and turn the shoe adjusting screw downward using a small screwdriver so that the shoes will expand until they get into close contact with the rotor. (Turn down the adjusting screw notch by notch until the rotor does not turn.)

   b. Turn the adjusting screw in the opposite direction (upward) until the rotor can be turned lightly. Standard number of notches to turn upward: 7 or 8.

   Turn the rotor in order to ensure that there is no brake dragging.

2. Adjustment of parking brake cable

   a. Turn the equalizer nut so that the parking brake lever travels 6 or 7 notches when pulled up with a force of 30 kg (66 lb).

   b. Make sure that there is no brake dragging and tighten the cable lock nut.

   Torque : 6 N·m (52 lb in)

3. Break–in of parking brake shoe
   - When poor braking is felt, or just after replacement of parking brake shoes, be sure to conduct the break–in procedure by driving the vehicle as follows:

   a. Forward 50 km/h (30 mph) × 400 m (about 30 seconds) with a lever pull force of 15 kg (33 lb).

   b. Backward 10 km/h (6 mph) × 50 m (about 18 seconds) with a lever pull force of 15 kg (33 lb).

NOTE: Break–in procedures must be performed under safe conditions and traffic rules.

- If the braking effect remains poor after the break–in, wait for some time until parking brake shoe cools down and repeat procedures a. and b. noted above.
- On completion of break–in, inspect the parking brake lever stroke, and if the lever does not come within the specified number of notches when pulled up, readjust.
- Excessive break–in may cause premature wear of the parking brake lining.

Downloaded from www.Manualslib.com manuals search engine

Main Data and Specifications

General Specifications

Rear parking brake	
Type	Duo–servo
Lining Dimension	121.2 cm^2 (18.79 in^2)
Adjusting Method	Manual adjusting
Rotor (Drum) Inside Diameter	210 mm (8.27 in)
Parking Brake Lever Stroke	6–7 notches When pulled with a force of 30 kg (66 lb)

Torque Specifications

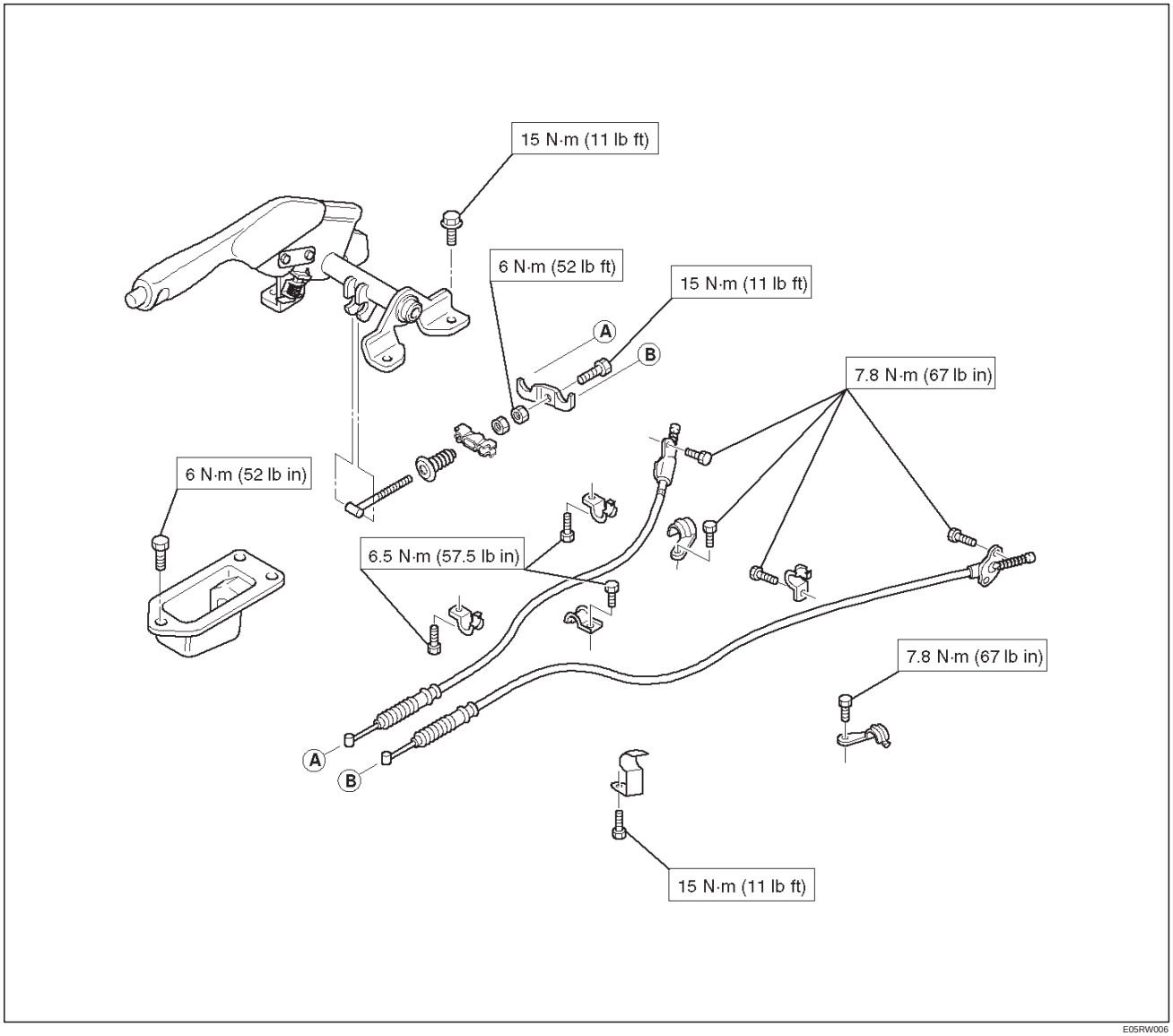

E05RW006

Downloaded from www.Manualslib.com manuals search engine

TROOPER

ENGINE

CONTENTS

Engine Mechanical 6A
Engine Cooling 6B
Engine Fuel 6C
Engine Electrical 6D1
Ignition System 6D2
Starting and Charging System 6D3
Driveability and Emissions 6E
Engine Exhaust 6F
Engine Lubrication 6G
Engine Speed Control System 6H
Inducton 6J

ENGINE MECHANICAL

CONTENTS

Service Precaution 6A–2
General Description 6A–3
Engine Diagnosis 6A–4
Cylinder Head Cover LH 6A–19
Removal 6A–19
Installation 6A–20
Cylinder Head Cover RH 6A–21
Removal 6A–21
Installation 6A–21
Common Chamber 6A–22
Removal 6A–22
Installation 6A–22
Exhaust Manifold LH 6A–24
Removal 6A–24
Installation 6A–24
Exhaust Manifold RH 6A–25
Removal 6A–25
Installation 6A–25
Crankshaft Pulley 6A–26
Removal 6A–26
Installation 6A–26
Timing Belt 6A–27
Removal 6A–27
Installation 6A–28
Camshaft 6A–32
Removal 6A–32
Installation 6A–32
Cylinder Head 6A–35
Removal 6A–35
Installation 6A–35
Valve Stem Oil Controller , Valve Spring and Valve Guide 6A–37
Removal 6A–37
Installation 6A–37
Piston, Piston Ring and Connecting Rod . . . 6A–38
Removal 6A–38
Installation 6A–39
Crankshaft and Main Bearings 6A–40
Removal 6A–40
Installation 6A–41
Rear Oil Seal 6A–45
Removal 6A–45
Installation 6A–45
Engine Assembly 6A–46
Removal 6A–46
Installation 6A–47
Cylinder Head 6A–49
Cylinder Head and Associated Parts 6A–49
Disassembly 6A–50
Clean 6A–50
Inspection and Repair 6A–50
Reassembly 6A–51
Valve Spring, Oil Controller, Valve, Valve Guide 6A–53
Valve Spring, Oil Controller, Valve, Valve Guide and Associated Parts 6A–53
Disassembly 6A–53
Inspection and Repair 6A–54
Reassembly 6A–57
Valve Clearance Adjustments 6A–58
Camshaft 6A–60
Camshaft and Associated Parts 6A–60
Disassembly 6A–60
Inspection and Repair 6A–61
Reassembly 6A–63
Crankshaft 6A–66
Crankshaft and Associated Parts 6A–66
Disassembly 6A–67
Inspection and Repair 6A–67
Inspection and Repair 6A–68
Reassembly 6A–70

Downloaded from www.Manualslib.com manuals search engine

Piston and Connecting Rod 6A–74
Piston, Connecting Rod and Associate Parts 6A–74
Disassembly 6A–74
Inspection and Repair 6A–75
Reassembly 6A–79
Cylinder Block 6A–81
Cylinder Block and Associated Parts 6A–81
Disassembly 6A–81
Inspection and Repair 6A–82
Reassembly 6A–83
Main Data and Specification 6A–86
Special Tool 6A–92

Service Precaution

WARNING: THIS VEHICLE HAS A SUPPLEMENTAL RESTRAINT SYSTEM (SRS). REFER TO THE SRS COMPONENT AND WIRING LOCATION VIEW IN ORDER TO DETERMINE WHETHER YOU ARE PERFORMING SERVICE ON OR NEAR THE SRS COMPONENTS OR THE SRS WIRING. WHEN YOU ARE PERFORMING SERVICE ON OR NEAR THE SRS COMPONENTS OR THE SRS WIRING, REFER TO THE SRS SERVICE INFORMATION. FAILURE TO FOLLOW WARNINGS COULD RESULT IN POSSIBLE AIR BAG DEPLOYMENT, PERSONAL INJURY, OR OTHERWISE UNNEEDED SRS SYSTEM REPAIRS.

CAUTION: Always use the correct fastener in the proper location. When you replace a fastener, use ONLY the exact part number for that application. ISUZU will call out those fasteners that require a replacement after removal. ISUZU will also call out the fasteners that require thread lockers or thread sealant. UNLESS OTHERWISE SPECIFIED, do not use supplemental coatings (Paints, greases, or other corrosion inhibitors) on threaded fasteners or fastener joint interfaces. Generally, such coatings adversely affect the fastener torque and the joint clamping force, and may damage the fastener. When you install fasteners, use the correct tightening sequence and specifications. Following these instructions can help you avoid damage to parts and systems.

Downloaded from www.Manualslib.com manuals search engine

General Description

Engine Cleanliness And Care

An automobile engine is a combination of many machined, honed, polished and lapped surfaces with tolerances that are measured in the thousandths of a millimeter (ten thousandths of an inch). Accordingly, when any internal engine parts are serviced, care and cleanliness are important. Throughout this section, it should be understood that proper cleaning and protection of machined surfaces and friction areas is part of the repair procedure. This is considered standard shop practice even if not specifically stated.

- A liberal coating of engine oil should be applied to all friction areas during assembly to protect and lubricate the surfaces on initial operation.
- Whenever valve train components, pistons, piston rings, connecting rods, rod bearings, and crankshaft journal bearings are removed for service, they should be retained in order.
- At the time of installation, they should be installed in the same locations and with the same mating surfaces as when removed.
- Battery cables should be disconnected before any major work is performed on the engine. Failure to disconnect cables may result in damage to wire harness or other electrical parts.
- The six cylinders of this engine are identified by numbers; Right side cylinders 1, 3 and 5, Left side cylinders 2, 4 and 6, as counted from crankshaft pulley side to flywheel side.

General Information on Engine Service

The following information on engine service should be noted carefully, as it is important in preventing damage and contributing to reliable engine performance:

- When raising or supporting the engine for any reason, do not use a jack under the oil pan. Due to the small clearance between the oil pan and the oil pump strainer, jacking against the oil pan may cause damage to the oil pick–up unit.
- The 12–volt electrical system is capable of damaging circuits. When performing any work where electrical terminals could possibly be grounded, the ground cable of the battery should be disconnected at the battery.
- Any time the intake air duct or air cleaner is removed, the intake opening should be covered. This will protect against accidental entrance of foreign material into the cylinder which could cause extensive damage when the engine is started.

Cylinder Block

The cylinder block is made of aluminum die–cast casting for 75˚V–type six cylinders. It has a rear plate integrated structure and employs a deep skint. The cylinder liner is cast and the liner inner diameter and crankshaft journal diameter are classified into grades. The crankshaft is supported by four bearings of which width of No.3 bearing on the body side is different in order to support the thrust bearing. The bearing cap is made of nodular cast iron and each bearing cap uses four bolts and two side bolts.

Cylinder Head

The cylinder head, made of aluminum alloy casting employs a pent–roof type combustion chamber with a spark plug in the center. The intake and exhaust valves are placed in V–type design. The ports are cross–flow type.

Valve Train

Intake and exhaust camshaft on the both side of banks are driven through an camshaft drive gear by timing belt. The valves are operated by the camshaft and the valve clearance is adjusted to select suitable thickness shim.

Intake Manifold

The intake manifold system is composed of the aluminum cast common chamber and intake manifold attached with six fuel injectors.

Exhaust Manifold

The exhaust manifold is made of nodular cast iron.

Pistons and Connecting Rods

Aluminum pistons are used after selecting the grade that meets the cylinder bore diameter. Each piston has two compression rings and one oil ring. The piston pin is made of chromium steel is offset 1mm toward the thrust side, and the thrust pressure of piston to the cylinder wall varies gradually as the piston travels. The connecting rods are made of forged steel. The connecting rod bearings are graded for correct seze selection.

Crankshaft and Bearings

The crankshaft is made of Ductile cast–iron. Pins and journals are graded for correct size selection for their bearing.

Engine Lubrication

The oil discharged by a trochoid–type oil pump driven by the crankshaft is fed through full–flow oil filter and to the oil gallery provided under the crankshaft bearing cap. The oil is then led to the crankshaft journals and cylinder head. The crank pins are lubricated with oil from crankshaft journals through oil holes. Also, an oil jet is fed to each cylinder from crankshaft juornals on the connecting rod for piston cleaning. The oil pan flange is dealed with liquid packing only; do not deform or damage the flange surface during removal or installation.

Downloaded from www.Manualslib.com manuals search engine

Engine Diagnosis

Hard Starting

1. Starting Motor Does Not Turn Over

Troubleshooting Procedure

Turn on headlights and starter switch.

Condition	Possible cause	Correction
Headlights go out or dim considerably	Battery run down or under charged	Recharge or replace battery
	Terminals poorly connected	Clean battery posts and terminals and connect properly
	Starting motor coil circuit shorted	Overhaul or replace
	Starting motor defective	Overhaul or replace

2. Ignition Trouble — Starting Motor Turns Over But Engine Does Not Start

Spark Test

Disconnect an igniton coil from any spark plug. Connect the spark plug tester J–26792 (ST–125), start the engine, and check if a spark is generated in the spark plug tester. Before starting the engine, make sure that the spark plug tester is properly grounded. To avoid electrical shock, do not touch the part where insulation of the igniton coil is broken while the engine is running.

Condition	Possible cause	Correction
Spark jumps across gap	Spark plug defective	Clean, adjust spark gap or replace
	Ignition timing incorrect	Refer to Ignition System
	Fuel not reaching fuel injector(s) or engine	Refer to item 3 (Trouble in fuel system)
	Valve timing incorrect	Adjust
	Engine lacks compression	Refer to item 4 (Engine lacks compression)
No sparking takes place	Ignition coil disconnected or broken	Connect properly or replace
	Electronic Ignition System with module	Replace
	Poor connections in engine harness	Correct
	Powertrain Control Module cable disconnected or defective	Correct or replace

3. Trouble In Fuel System

Condition	Possible cause	Correction
Starting motor turns over and spark occurs but engine does not start.	Fuel tank empty	Fill
	Water in fuel system	Clean
	Fuel filter clogged	Replace filter
	Fuel pipe clogged	Clean or replace
	Fuel pump defective	Replace
	Fuel pump circuit open	Correct or replace
	Evaporative Emission Control System circuit clogged	Correct or replace
	Multiport Fuel Injection System faulty	Refer to “Electronic Fuel Injection” section

Downloaded from www.Manualslib.com manuals search engine

4. Engine Lacks Compression

Condition	Possible cause	Correction
Engine lacks compression	Spark plug loosely fitted or spark plug gasket defective	Tighten to specified torque or replace gasket
	Valve timing incorrect	Adjust
	Cylinder head gasket defective	Replace gasket
	Valve incorrectly seated	Lap valve
	Valve stem seized	Replace valve and valve guide
	Valve spring weakened or broken	Replace
	Cylinder or piston rings worn	Overhaul engine
	Piston ring seized	Overhaul engine.

Engine Compression Test Procedure

1. Start and run the engine until the engine reaches normal operating temperature.
2. Turn the engine off.
3. Remove all the spark plugs.
4. Remove ignition coil fuse (15A) and disable the ignition system.
5. Remove the fuel pump relay from the relay and fuse box.
6. Engage the starter and check that the cranking speed is approximately 300 rpm.
7. Install cylinder compression gauge into spark plug hole.
8. With the throttle valve opened fully, keep the starter engaged until the compression gage needle reaches the maximum level. Note the reading.
9. Repeat the test with each cylinder.
   If the compression pressure obtained falls below the limit, engine overhaul is necessary.

   Limit; 1000 kPa (145 psi)

Downloaded from www.Manualslib.com manuals search engine

Rough Engine Idling or Engine Stalling

Condition	Possible cause	Correction
Trouble in fuel injection system	Throttle shutting off incomplete	Correct or replace
	Throttle position sensor circuit open or shorted	Correct or replace
	Fuel injector circuits open or shorted	Correct or replace
	Fuel injectors damaged	Replace
	Fuel pump relay defective	Replace
	Mass Airflow Sensor circuit open or poor connections	Correct or replace
	Mass Airflow Sensor defective	Replace
	Manifold Absolute Pressure Sensor circuit open or poor connections	Correct or replace
	Manifold Absolute Pressure Sensor defective	Replace
	Engine Coolant Temperature Sensor circuit open or poor connections	Correct or replace
	Engine Coolant Temperature Sensor defective	Replace
	Intake Air Temperature sensor circuit open or poor connections	Correct or replace
	Intake Air Temperature sensor defective	Replace
	Ion sensing module cable broken or poor connections	Correct or replace
	Ion sensing module defective	Replace
	Vehicle Speed Sensor circuit open or shorted	Correct or replace
	Vehicle Speed Sensor defective	Replace
Trouble in emission control system	Powertrain Control Module defective	Replace
	Exhaust Gas Recirculation Valve circuit open or poor connections	Correct or replace
	Exhaust Gas Recirculation Valve faulty	Replace
	Canister purge valve circuit open or poor connections	Correct or replace
	Canister purge valve defective	Replace
	Evaporative Emission Canister Purge control valve defective	Replace
	Trouble in ignition system	Refer to “Hard Start”
Others	Engine lacks compression	Refer to “Hard Start”
	Valve incorrectly seated	Lap valve
	Air Cleaner Filter clogged	Replace filter element
	Valve timing incorrect	Readjust
	Idle air control valve broken	Replace
	Fast idle solenoid defective	Replace
	Positive Crankcase Ventilation valve defective or clogged	Replace

Downloaded from www.Manualslib.com manuals search engine

Rough Engine Running

Condition	Possible cause	Correction
Engine misfires periodically	Ignition coil layer shorted	Replace
	Spark plugs fouling	Clean or install hotter type plug
	Spark plug(s) insulator nose leaking	Replace
	Fuel injector(s) defective	Replace
	Powertrain control module faulty	Replace
Engine knocks periodically	Spark plugs running too hot	Install colder type spark plugs
	Powertrain control module faulty	Replace
	Ion sensing module faulty	Refer or replace
Engine lacks power	Spark plugs fouled	Clean
	Fuel injectors defective	Replace
	Mass Airflow Sensor or Intake Airflow Sensor circuit defective	Correct or replace
	Manifold Absolute Pressure (MAP) Sensor or Manifold Absolute Pressure Sensor circuit defective	Correct or replace
	Engine Coolant Temperature Sensor or Engine Coolant Temperature Sensor circuit defective	Correct or replace
	Powertrain Control Module faulty	Replace
	Intake Air Temperature Sensor or Intake Air Temperature Sensor circuit defective	Correct or replace
	Throttle Position Sensor or Throttle Position Sensor circuit defective	Correct or replace
	Ion sensing module or ION sensing module circuits defective	Correct or replace

Downloaded from www.Manualslib.com manuals search engine

Hesitation

Condition	Possible cause	Correction
Hesitation on acceleration	Throttle Position Sensor adjustment incorrect	Replace throttle valve assembly
	Throttle Position Sensor circuit open or shorted	Correct or replace
	Mass Airflow Sensor circuit open or poor connections	Correct or replace
	Mass Airflow Sensor defective	Replace
	Manifold Absolute Pressure (MAP) Sensor circuit open or shorted	Correct or replace
	MAP Sensor defective	Replace
	Intake Air Temperature (IAT) Sensor circuit open or shorted	Correct or replace
	Ion sensing module Circuit open or poor connections	Correct or replace
	Ion sensing module defective	Replace
	IAT Sensor defective	Replace
Hesitation at high speeds (Fuel pressure too low)	Fuel tank strainer clogged	Clean or replace
	Fuel pipe clogged	Clean or replace
	Fuel filter clogged	Replace
	Defective fuel pump system	Check and replace
	Fuel Pressure Control Valve leaking	Replace
Hesitation at high speeds (Fuel injector not working normally)	Power supply or ground circuit for Multiport Fuel Injection System shorted or open	Check and correct or replace
	Fuel Injector defective	Replace
	Cable of Multiport Fuel Injection System circuit open or poor connections	Correct or replace

Downloaded from www.Manualslib.com manuals search engine

Condition	Possible cause	Correction
Hesitation at high speeds	Powertrain Control Module defective	Replace
	Throttle Position Sensor cable broken or poor connections	Correct or replace
	Throttle Position Sensor defective	Replace
	Engine Coolant Temperature Sensor circuit open or shorted	Correct or replace
	Engine Coolant Temperature Sensor defective	Replace
	Mass Airflow Sensor circuit open or poor connections	Correct or replace
	Mass Airflow Sensor defective	Replace
	MAP Sensor cable broken or poor connections	Correct or replace
	MAP Sensor defective	Replace
	IAT Sensor circuit open or poor connections	Correct or replace
	IAT Sensor defective	Replace
	Ion sensing module circuit open or poor connections	Correct or replace
	Ion sensing module defective	Replace
	Throttle valve not fully opened	Check and correct or replace
	Air Cleaner Filter clogged	Replace filter element
	Power supply voltage too low	Check and correct or replace

Downloaded from www.Manualslib.com manuals search engine

Engine Lacks Power

Condition	Possible cause	Correction
Trouble in fuel system	Fuel Pressure Control Valve not working normally	Replace
	Fuel injector clogged	Clean or replace
	Fuel pipe clogged	Clean
	Fuel filter clogged or fouled	Replace
	Fuel pump drive circuit not working normally	Correct or replace
	Fuel tank not sufficiently breathing due to clogged Evaporative Emission Control System circuit	Clean or replace
	Water in fuel system	Clean
	Inferior quality fuel in fuel system	Use fuel of specified octane rating
	Powertrain Control Module supplied poor voltage	Correct circuit
	Throttle Position Sensor cable broken or poor connections	Correct or replace
	Throttle Position Sensor defective	Replace
	Mass Airflow Sensor not working normally	Replace
	Manifold Absolute Pressure Sensor not working normally	Replace
	Intake Air Temperature Sensor not working normally	Replace
	Engine Coolant Temperature Sensor circuit open or shorted	Correct or replace
	Engine Coolant Temperature Sensor defective	Replace
	Powertrain Control Module defective	Replace
Trouble in intake or exhaust system	Air Cleaner Filter clogged	Replace filter element
	Air duct kinked or flattened	Correct or replace
	TWC defective	Repair
Ignition failure	———	Refer to Hard Start Troubleshooting Guide
	Heat range of spark plug inadequate	Install spark plugs of adequate heat range
	Ignition coil defective	Replace

Downloaded from www.Manualslib.com manuals search engine

Condition	Possible cause	Correction
Engine overheating	Level of Engine Coolant too low	Replenish
	Fan clutch defective	Replace
	Incorrect fan installed	Replace
	Thermostat defective	Replace
	Engine Coolant pump defective	Correct or replace
	Radiator clogged	Clean or replace
	Radiator filler cap defective	Replace
	Level of oil in engine crankcase too low or wrong engine oil	Change or replenish
	Resistance in exhaust system increased	Clean exhaust system or replace defective parts
	Throttle Position Sensor adjustment incorrect	Replace with Throttle Valve ASM
	Throttle Position Sensor circuit open or shorted	Correct or replace
	Cylinder head gasket damaged	Replace
Engine overcooling	Thermostat defective	Replace (Use a thermostat set to open at 82˚C (180˚F))
Engine lacks compression	———	Refer to Hard Start
Others	Tire inflation pressure abnormal	Adjust to recommended pressures
	Brake drag	Adjust
	Clutch slipping	Adjust or replace
	Level of oil in engine crankcase too high	Correct level of engine oil
	Exhaust Gas Recirculation Valve defective	Replace

Engine Noisy

Abnormal engine noise often consists of various noises originating in rotating parts, sliding parts and other moving parts of the engine. It is, therefore, advisable to locate the source of noise systematically.

Condition	Possible cause	Correction
Noise from crank journals or from crank bearings (Faulty crank journals and crank bearings usually make dull noise that becomes more evident when accelerating)	Oil clearance increased due to worn crank journals or crank bearings	Replace crank bearings and crankshaft or regrind crankshaft and install the undersize bearing
	Crankshaft out of round	Replace crank bearings and crankshaft or regrind crankshaft and install the undersize bearing
	Crank bearing seized	Crank bearing seized. Replace crank bearings and crankshaft or regrind crankshaft and install the undersize bearing

Downloaded from www.Manualslib.com manuals search engine

Troubleshooting Procedure

Short out each spark plug in sequence using insulated spark plug wire removers. Locate cylinder with defective bearing by listening for abnormal noise that stops when spark plug is shorted out.

Condition	Possible cause	Correction
Noise from connecting rods or from connecting rod bearings (Faulty connecting rods or connecting rod bearings usually make an abnormal noise slightly higher than the crank bearing noise, which becomes more evident when engine is accelerated)	Bearing or crankshaft pin worn	Replace connecting rod bearings and crankshaft or regrind crankshaft pin and install the undersize bearing
	Crankpin out of round	Replace connecting rod bearings and crankshaft or regrind crankshaft pin and install the undersize bearing
	Connecting rod bent	Correct or replace
	Connecting rod bearing seized	Replace connecting rod bearings and crankshaft or regrind crankshaft pin and install the undersize bearing

Troubleshooting Procedure

Abnormal noise stops when the spark plug on the cylinder with defective part is shorted out.

Condition	Possible cause	Correction
Piston and cylinder noise (Faulty piston or cylinder usually makes a combined mechanical thumping noise which increases when engine is suddenly accelerated but diminishes gradually as the engine warms up)	Piston clearance increased due to cylinder wear	Replace piston and cylinder body
	Piston seized	Replace piston and cylinder body
	Piston ring broken	Replace piston and cylinder body
	Piston defective	Replace pistons and others

Troubleshooting Procedure

Short out each spark plug and listen for change in engine noise.

Condition	Possible cause	Correction
Piston pin noise (Piston makes noise each time it goes up and down)	Piston pin or piston pin hole worn	Replace piston, piston pin and connecting rod assy

Downloaded from www.Manualslib.com manuals search engine

Troubleshooting Procedure

The slapping sound stops when spark plug on bad cylinder is shorted out.

Condition	Possible cause	Correction
Timing belt noise	Timing belt tension is incorrect	Replace pusher or adjust the tension pulley or replace timing belt
	Tensioner bearing defective	Replace
	Timing belt defective	Replace
	Timing pulley defective	Replace
	Timing belt comes in contact with timing cover	Replace timing belt and timing cover
Valve noise	Valve clearance incorrect	Replace adjusting shim
	Valve and valve guide seized	Replace valve and valve guide
	Valve spring broken or weakened	Replace
	Valve seat off–positioned	Correct
	Camshaft worn out	Replace
Crankshaft noise	Crankshaft end play excessive (noise occurs when clutch is engaged)	Replace thrust bearing
Engine knocking	Preignition due to use of spark plugs of inadequate heat range	Install Spark Plugs of adequate heat range
	Carbon deposits in combustion chambers	Clean
	Fuel too low in octane rating	Replace fuel
	Wide Open Throttle enrichment system failure	Refer to Section 6E
	Selection of transmission gear incorrect	Caution operator of incorrect gear selection
	Engine overheating	Refer to “Engine Lacks Power”
Others	Water pump defective	Replace
	Drive belt slipping	Replace auto tentioner or drive belt

Downloaded from www.Manualslib.com manuals search engine

Abnormal Combustion

Condition	Possible cause	Correction
Trouble in fuel system	Fuel pressure control valve defective	Replace
	Fuel filter clogged	Replace
	Fuel pump clogged	Clean or replace
	Fuel tank or fuel pipe clogged	Clean or replace
	Fuel injector clogged	Clean or replace
	Fuel pump relay defective	Replace
	Power supply cable for fuel pump broken or poor connections	Reconnect, correct or replace
	Mass Airflow (MAF) sensor circuit open or defective	Correct or replace
	MAF Sensor defective	Replace
	Manifold Absolute Pressure Sensor circuit open or shorted	Correct or replace
	Manifold Absolute Pressure Sensor defective	Replace
	Engine Coolant Temperature (ECT) Sensor circuit open or shorted	Correct or replace
	ECT Sensor defective	Replace
	Throttle Position Sensor adjustment incorrect	Readjust
	Throttle Position Sensor defective	Replace
	Throttle Position Sensor connector poor connections	Reconnect
	Vehicle Speed Sensor cable poor connections or defective	Correct or replace
	Vehicle Speed Sensor loosely fixed	Fix tightly
	Vehicle Speed Sensor in wrong contact or defective	Replace
	Powertrain Control Module cable poor connections or defective	Correct or replace
Trouble in emission control system	Heated Oxygen Sensor circuit open	Correct or replace
	Heated Oxygen Sensor defective	Replace
	Signal vacuum hose loosely fitted or defective	Correct or replace
	EGR Valve circuit open or shorted	Correct or replace
	Exhaust Gas Recirculation Valve defective	Replace
	ECT Sensor circuit open or shorted	Correct or replace
	Canister Purge Valve circuit open or shorted	Correct or replace
	Canister Purge Valve defective	Replace
	ECT Sensor defective	Replace
	Positive Crankcase Ventilation (PCV) valve and hose clogged	Correct or replace
	Evaporator system	Refer to Section 6E
Trouble in ignition system	———	Refer to “Engine Lacks Power”

Downloaded from www.Manualslib.com manuals search engine

Condition	Possible cause	Correction
Trouble in cylinder head parts	Carbon deposits in combustion chamber	Remove carbon
	Carbon deposit on valve, valve seat and valve guide	Remove carbon

Downloaded from www.Manualslib.com manuals search engine

Engine Oil Consumption Excessive

Condition	Possible cause	Correction
Oil leaking	Oil pan drain plug loose	Retighten or replace gasket
	Crankcase fixing bolts loosened	Retighten
	Oil pan setting bolts loosened	Retighten
	Oil pan gasket broken	Replace gasket
	Front cover retaining bolts loose or gasket broken	Retighten or replace gasket
	Head cover fixing bolts loose or gasket broken	Retighten or replace gasket
	Oil filter adapter cracked	Replace
	Oil filter attaching bolt loose or rubber gasket broken	Retighten or replace oil filter
	Crankshaft front or rear oil seal defective	Replace oil seal
	Oil pressure unit loose or broken	Retighten or replace
	Blow–by gas hose broken	Replace hose
	Positive Crankcase Ventilation Valve clogged	Clean
	Engine/Transmission coupling failed	Replace oil seal
Oil leaking into combustion chambers due to poor seal in valve system	Valve stem oil seal defective	Replace
	Valve stem or valve guide worn	Replace valve and valve guide
Oil leaking into combustion chambers due to poor seal in cylinder parts	Cylinders and pistons worn excessively	Replace cylinder body assembly and pistons
	Piston ring gaps incorrectly positioned	Correct
	Piston rings set with wrong side up	Correct
	Piston ring sticking	Replace cylinder body assembly and pistons
	Piston ring and ring groove worn	Replace pistons and others
	Return ports in oil rings clogged	Clean piston and replace rings
Positive Crankcase Ventilation System malfunctioning	Positive Crankcase Ventilation Valve clogged	Clean
Others	Improper oil viscosity	Use oil of recommended S.A.E. viscosity
	Continuous high speed driving and/or severe usage such as trailer towing	Continuous high speed operation and/or severe usage will normally cause increased oil consumption

Downloaded from www.Manualslib.com manuals search engine

Fuel Consumption Excessive

Condition	Possible cause	Correction
Trouble in fuel system	Mixture too rich or too lean due to trouble in fuel injection system	Refer to “Abnormal Combustion”
	Fuel cut function does not work	Refer to “Abnormal Combustion”
Trouble in ignition system	Misfiring or abnormal combustion due to trouble in ignition system	Refer to “Hard Start” or “Abnormal Combustion”
Others	Engine idle speed too high	Reset Idle Air Control Valve
	Fuel system leakage	Correct or replace
	Clutch slipping	Correct
	Brake drag	Correct
	Selection of transmission gear incorrect	Caution operator of incorrect gear selection
	Excessive Exhaust Gas Recirculation flow due to trouble in Exhaust Gas Recirculation system	Refer to “Abnormal Combustion”

Lubrication Problems

Condition	Possible cause	Correction
Oil pressure too low	Wrong oil in use	Replace with correct engine oil
	Relief valve sticking	Replace
	Oil pump not operating properly	Correct or replace
	Oil pump strainer clogged	Clean or replace strainer
	Oil pump worn	Replace
	Oil pressure gauge defective	Correct or replace
	Crankshaft bearing or connecting rod bearing worn	Replace
Oil contamination	Wrong oil in use	Replace with correct engine oil
	Oil filter clogged	Replace oil filter
	Cylinder head gasket damage	Replace gasket
	Burned gases leaking	Replace piston and piston rings or cylinder body assembly
Oil not reaching valve system	Oil passage in cylinder head or cylinder body clogged	Clean or correct

Engine Oil Pressure Check

1. Check for dirt, gasoline or water in the engine oil.
   a. Check the viscosity of the oil.
   b. Change the oil if the viscosity is outside the specified standard.
   c. Refer to the “Maintenance and Lubrication” section of this manual.
2. Check the engine oil level.
   The level should fall somewhere between the “ADD” and the “FULL” marks on the oil level dipstick.
   If the oil level does not reach the “ADD” mark on the oil level dipstick, engine oil must be added.
3. Remove the oil pressure unit.
4. Install an oil pressure gauge.
5. Start the engine and allow the engine to reach normal operating temperature (About 80˚C).
6. Measure the oil pressure.

   Oil pressure should be:

   392–550 kPa (56.9–80.4 psi) at 3000 rpm.
7. Stop the engine.
8. Remove the oil pressure gauge.
9. Install the oil pressure unit.
10. Start the engine and check for leaks.

Downloaded from www.Manualslib.com manuals search engine

Malfunction Indicator Lamp

The instrument panel “CHECK ENGINE” Malfunction Indicator Lamp (MIL) illuminates by self diagnostic system when the system checks the starting of engine, or senses malfunctions.

Condition	Possible cause	Correction
“CHECK ENGINE” MIL does not illuminate at the starting of engine	Bulb defective	Replace
	MIL circuit open	Correct or replace
	Command signal circuit to operate self diagnostic system shorted	Correct or replace
	Engine Control Module (PCM) cable loosely connected, disconnected or defective	Correct or replace
	PCM defective	Replace
“CHECK ENGINE” MIL illuminates, and stays on	Deterioration of heated oxygen sensor internal element	Replace
	Heated oxygen sensor connector terminal improper contact	Reconnect properly
	Heated oxygen sensor lead wire shorted	Correct
	Heated oxygen sensor circuit open	Correct or replace
	Deterioration of engine coolant temperature sensor internal element	Replace
	Engine coolant temperature sensor connector terminal improper contact	Reconnect properly
	Engine coolant temperature sensor lead wire shorted	Correct
	Engine coolant temperature sensor circuit open	Correct or replace
	Throttle position sensor open or shorted circuits	Correct or replace
	Deterioration of crankshaft position sensor	Replace
	Crankshaft position sensor circuit open or shorted	Correct or replace
	Vehicle speed sensor circuit open	Correct or replace
	Manifold absolute pressure sensor circuit open or shorted	Correct or replace
	Intake air temperature sensor circuit open or shorted	Correct or replace
	Fuel injector circuit open or shorted	Correct or replace
	PCM driver transistor defective	Replace PCM
	Malfunctioning of PCM RAM (Random Access Memory) or ROM (Read Only Memory)	Replace PCM

Downloaded from www.Manualslib.com manuals search engine

Cylinder Head Cover LH

Removal

1. Disconnect battery ground cable.
2. Remove engine cover from the dowels on the common chamber.

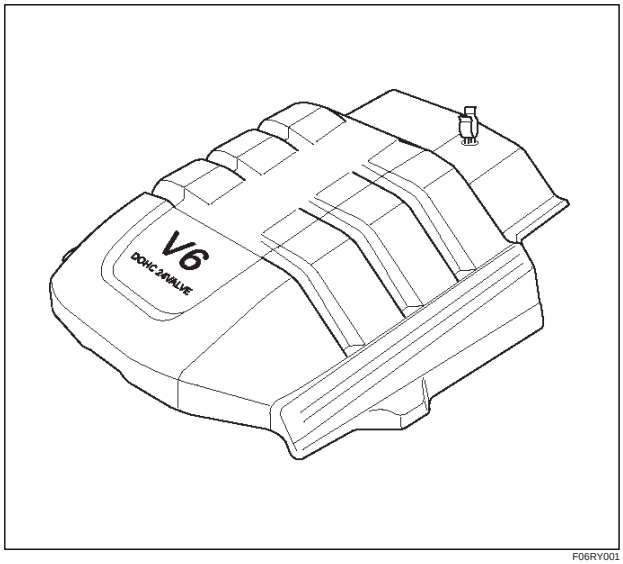

F06RY001

3. Disconnect positive crankcase ventilation hose.
4. Remove ground cable fixing bolt on cylinder head cover.
5. Ignition coil connector and ignition coil.
   - Disconnect the three connectors from the ignition coils.
   - Remove harness bracket bolt on cylinder head cover.
   - Remove fixing bolts on ignition coils.

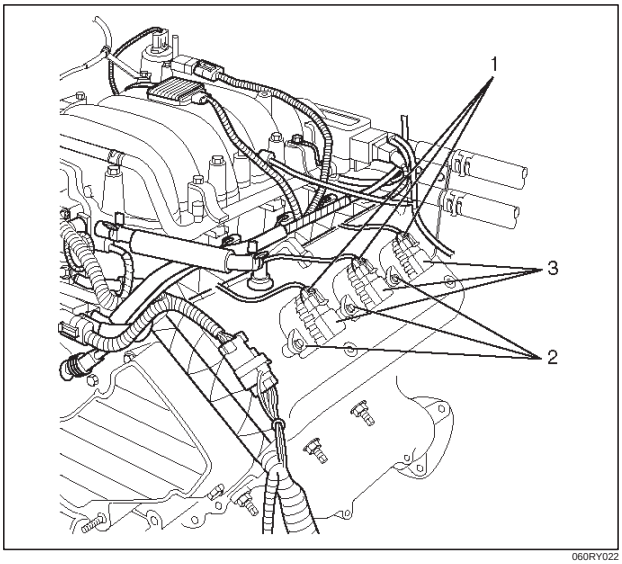

060RY022

Legend

(1) Ignition Coil Connector
(2) Bolt
(3) Ignition Coil Assemblies

6. Disconnect fuel injector harness connector then remove fuel injector harness bracket bolt.
7. Remove eight fixing bolts, then the cylinder head cover.

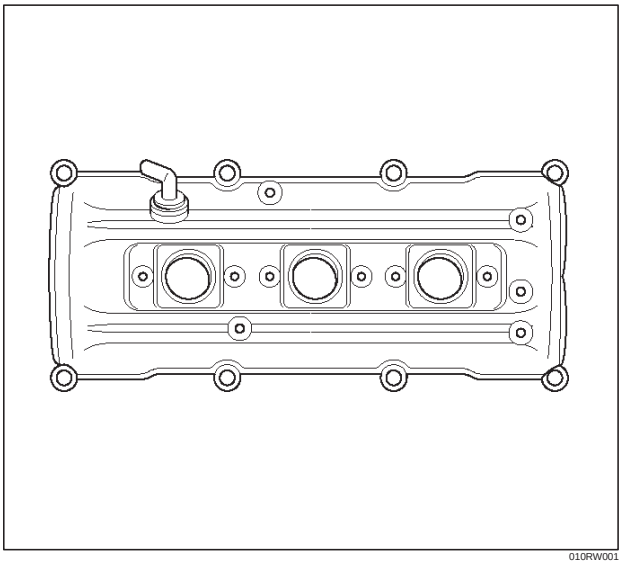

010RW001

Downloaded from www.Manualslib.com manuals search engine

Installation

1. Install cylinder head cover.
   - Clean the sealing surface of cylinder head and cylinder head cover to remove oil and sealing materials completely.
   - Apply sealant (TB-1207B or equivalent) of bead diameter 2-3 mm at eight place of arched area of camshaft bearing cap on front and rear sides.
   - The cylinder head cover must be installed with in 5 minutes after sealant application to prevent hardning of sealant.
   - Tighten bolts to the specified torque.

   Torque : 9 N·m (80 lb in)

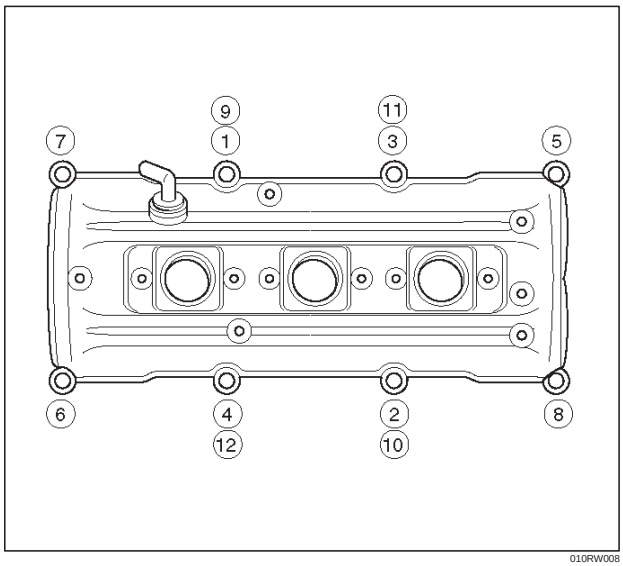

010RW008

2. Install fuel injection harness bracket and tighten bolt to the specified torque.

   Torque : 9 N·m (80 lb in)

3. Connect ignition coil connector and ignition coil, then tighten bolt to the specified torque.

   Torque : 4 N·m (35 lb in)

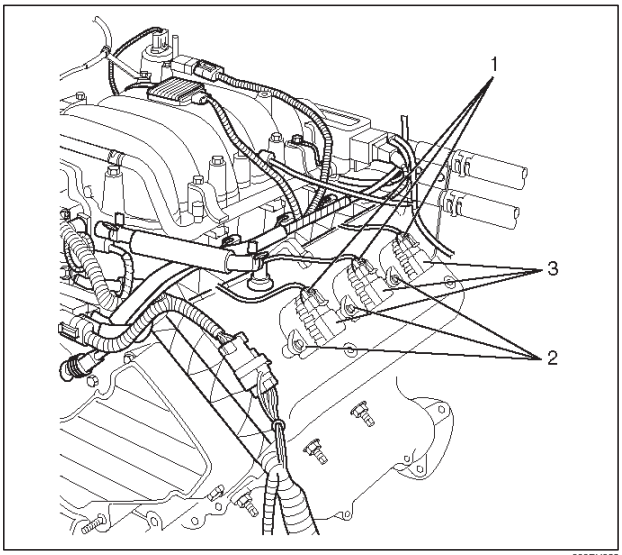

060RY022

Legend

(1) Ignition Coil Connector
(2) Bolt
(3) Ignition Coil Assembly

CAUTION: Ignition coil assembly #6 is different from ignition coil assembly from #1 to #5. Ignition coil assembly #6 is short type. So, note it when installing ignition coil assembly of #6.

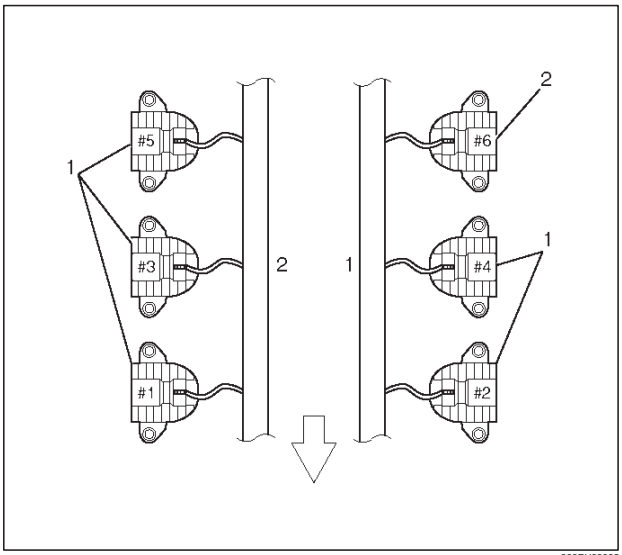

060RY00002

Legend

(1) Long Type Ignition Coil Assemblies (# 1 ~ # 5)
(2) Short Type Ignition Coil Assembly (# 6)

4. Connect ground cable and tighten bolts to the specified torque.

   Torque : 9 N·m (80 lb in)

5. Install positive crankcase ventilation hose.
6. Install engine cover mating with the dowels.

Downloaded from www.Manualslib.com manuals search engine

Cylinder Head Cover RH

Removal

1. Disconnect battery ground cable.
2. Remove engine cover from the dowele on the common chamber.

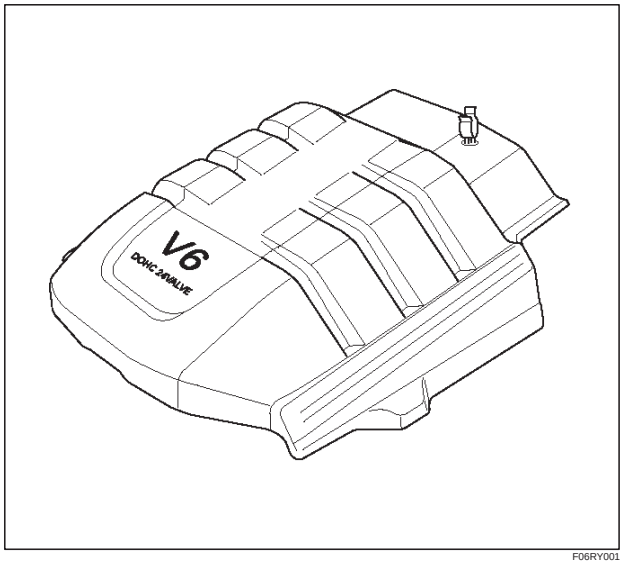

F06RY001

3. Disconnect ventilation hose from cylinder head cover.
4. Disconnect three ignition coil connectors from ignition coils and remove harness bracket bolts on cylinder head cover then remove ignition coil fixing bolts on ignition coils and remove ignition coils.
5. Disconnect fuel injector harness connector then remove fuel injector harness bracket bolt.
6. Remove eight fixing bolts then the cylinder head cover.

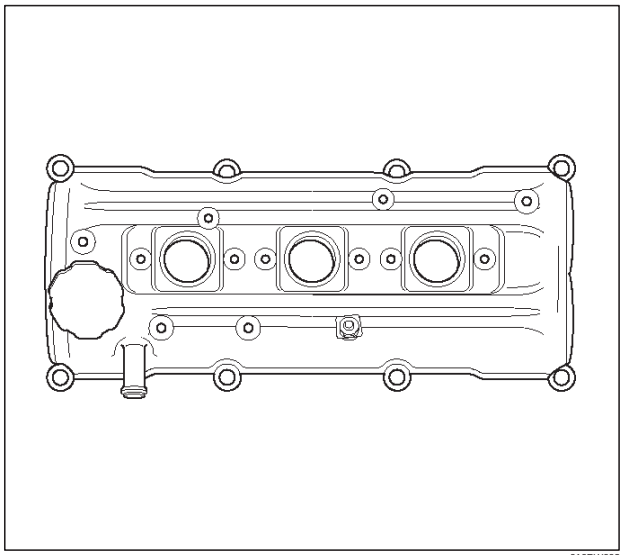

010RW002

Installation

1. Install cylinder head cover.
   - Clean the sealing surface of cylinder head and cylinder head cover to remove oil and sealing materials completely.
     Apply sealant (TB-1207B or equivalent) bead (diameter 2-3 mm) at eight places of arched areas of camshaft bracket on front and rear sides.
   - The cylinder head cover must be installed within 5 minutes after sealant application to prevent premature hardening of sealant.
   - Tighten bolts to the specified torque.

   Torque : 9 N·m (80 lb in)

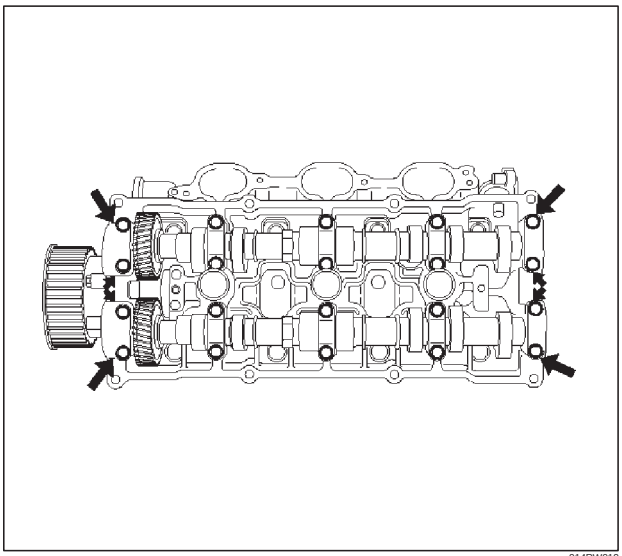

014RW019

2. Tighten fuel injector harness bracket bolts to specified torque then reconnect fuel injector harness connector.

   Torque : 7.8 N·m (5.7 lb ft)
3. Connect ignition coil connector and tighten ignition coil fixing bolts to specified torque.

   Torque : 4 N·m (35 lb in)
4. Connect ventilation hose to cylinder head.
5. Install engine cover mating with the dowels.

Downloaded from www.Manualslib.com manuals search engine

Common Chamber

Removal

1. Disconnect battery ground cable.
2. Remove air cleaner duct assembly.

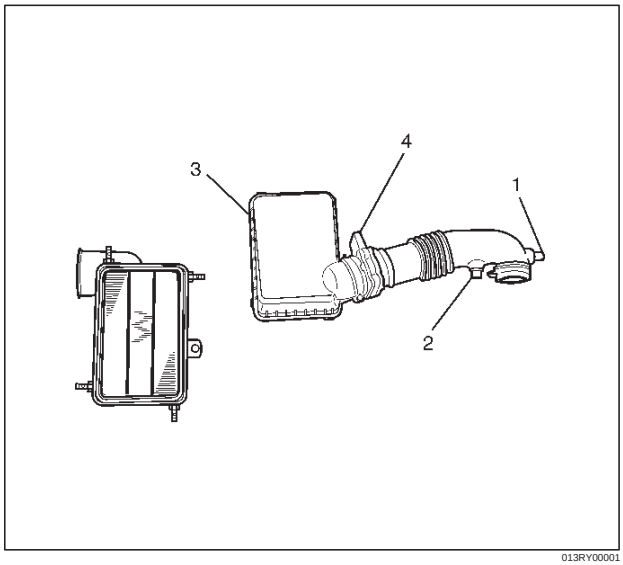

013RY00001

Legend

(1) Positive Crankcase Ventilation Hose Connector
(2) Intake Air Temperature Sensor
(3) Air Cleaner Duct Assembly
(4) Air Flow Sensor

3. Disconnect vacuum booster hose from common chamber.
4. Disconnect connector from manifold absolute pressure sensor, ion sensing module, throttle position sensor, solenoid valve, electric vacuum sensing valve, and EGR valve.
5. Disconnect vacuum hose on canister VSV and positive crankcase ventilation hose, fuel rail assembly with pressure control valve bracket.
6. Remove ventilation hose from throttle valve and intake duct and remove water hose.
7. Remove the four throttle body fixing bolts.
8. Remove exhaust gas recirculation valve assembly fixing bolt and nut on common chamber and remove EGR valve assembly.
9. Remove two bolts from common chamber rear side for remove fuel hose bracket.
10. Remove common chamber four bolts and four nuts then remove the common chamber.

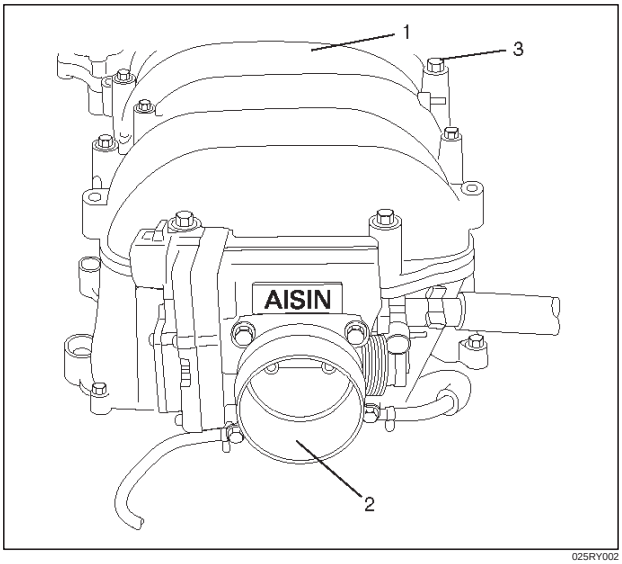

025RY002

Legend

(1) Common Chamber
(2) Throttle Valve Assembly
(3) Bolt

Installation

1. Install common chamber and tighten bolts and nuts to the specified torque.

   Torque :

   Bolt : 25 N·m (18 lb ft)

   Nut : 25 N·m (18 lb ft)
2. Install fuel hose bracket and tighten bolts to specified torque.

   Torque : 10 N·m (89 lb in)
3. Install exhaust gas recirculation valve assembly and tighten bolt and nut to the specified torque.

   Torque : 25 N·m (18 lb ft)
4. Install throttle body and tighten bolts to the specified torque.

   Torque : 25 N·m (18 lb ft)
5. Install ventilating hose to throttle valve and intake duct.
6. Connect vacuum hoses on canister VSV and positive crankcase ventilation hose. Tighten bolts for fuel rail assembly with pressure control valve bracket.

   Torque : 25 N·m (18 lb ft)
7. Connect each connector without fail.
8. Connect vacuum booster hose.

Downloaded from www.Manualslib.com manuals search engine

9. Connect the ion sensing module connectors as shown in the illustration.

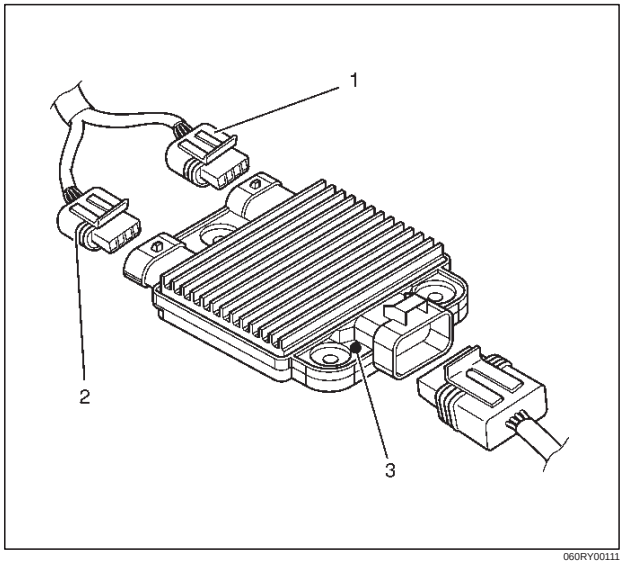

060RY00111

Legend

(1) Green Connector
(2) Blue Connector
(3) Identification Mark (6VE1 Engine Only)

10. Install air cleaner duct assembly.

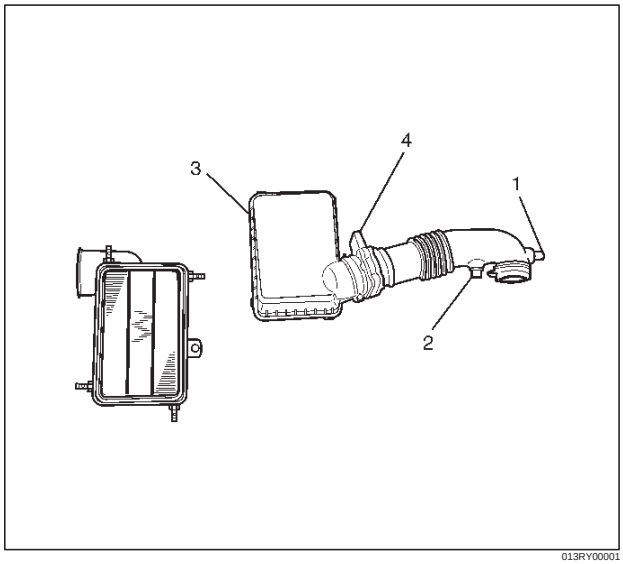

013RY00001

Legend

(1) Positive Crankcase Ventilation Hose Connector
(2) Intake Air Temperature Sensor
(3) Air Cleaner Duct Assembly
(4) Mass Air Flow Sensor

Downloaded from www.Manualslib.com manuals search engine

Exhaust Manifold LH

Removal

1. Disconnect battery ground cable.
2. Remove transfer case skid plate.
3. Remove 3rd crossmember.
4. Disconnect Heated oxygen (O_2) sensor connector.
5. Remove the three stud nuts from the front exhaust pipe flange and two nuts from the rear exhaust pipe flange.

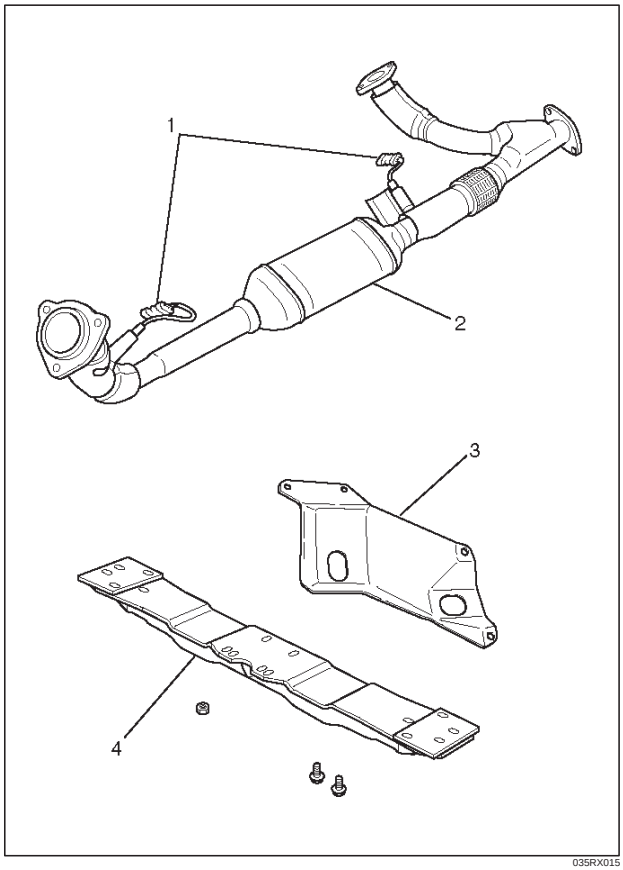

035RX015

Legend

(1) O_2 Sensors
(2) Exhaust Front Pipe LH
(3) Transfer Case Skid Plate
(4) 3rd Crossmember

6. Remove heat protector two fixing bolts and remove unit.
7. Remove a bolt on engine LH side for air conditioner (A/C) compressor bracket and loosen two bolts for A/C compressor then move A/C compressor to front side.
8. Remove exhaust manifold eight fixing nuts and remove exhaust manifold from the engine.

Installation

1. Install exhaust manifold and gasket and tighten exhaust manifold fixing nuts to the specified torque with new nuts.

   Torque: 52 N·m (38 lb ft)
2. Install heat protector.
3. Install exhaust front pipe's three stud nuts and rear pipe's two nuts to the specified torque.

   Torque :

   Stud nuts: 67 N·m (49 lb ft)

   Nuts: 43 N·m (32 lb ft)
4. Set A/C compressor to normal position and tighten two bolts to the specified torque.

   Torque : 40 N·m (30 lb ft)
5. Reconnect O_2 sensor connectors.
6. Install 3rd crossmember.
7. Install transfer case skid plate.

Downloaded from www.Manualslib.com manuals search engine

Exhaust Manifold RH

Removal

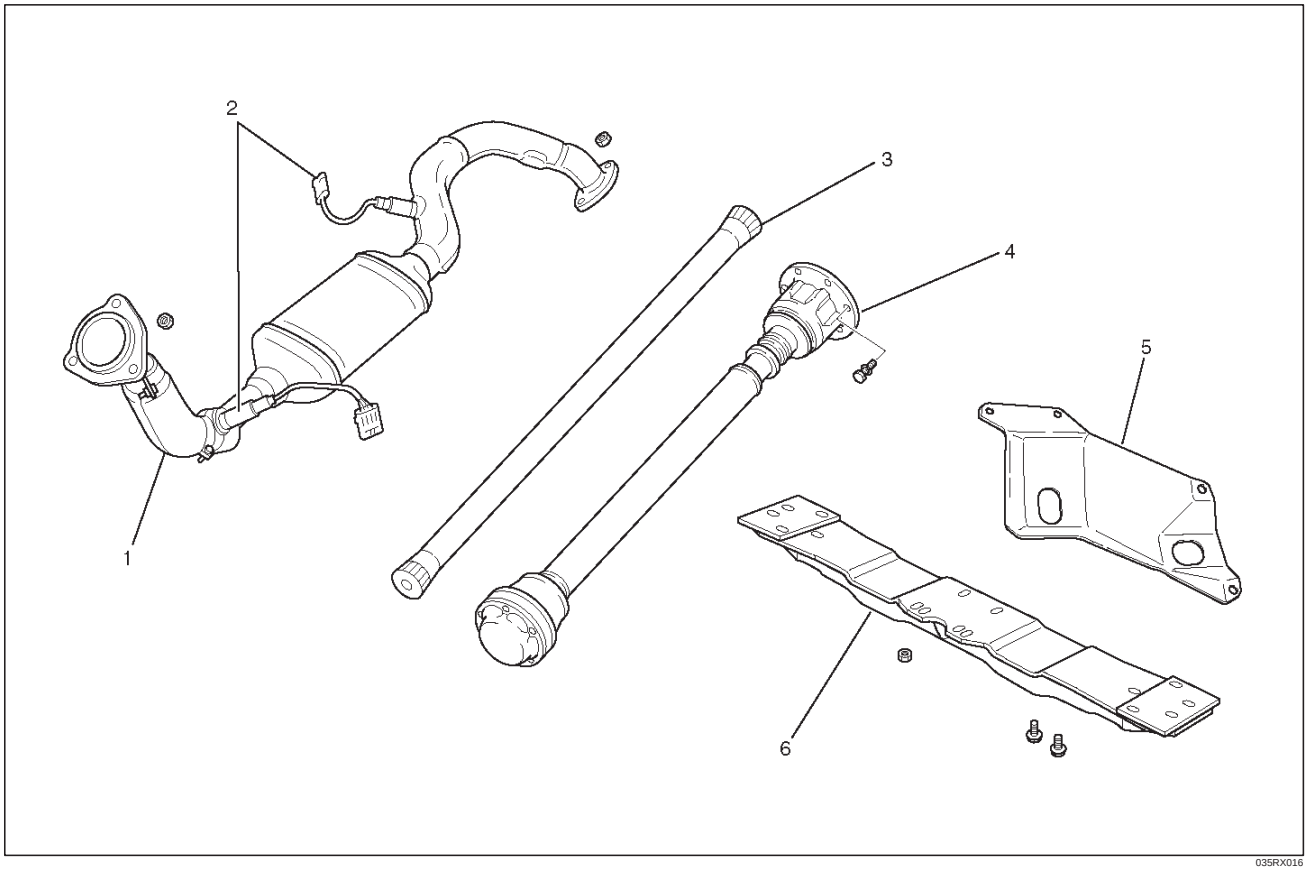

035RX016

Legend

(1) Exhaust Front Pipe RH
(2) O_2 Sensors
(3) Torsion Bar
(4) Front Propeller Shaft
(5) Transfer Case Skid Plate
(6) 3rd Crossmember

1. Disconnect battery ground cable.
2. Remove transfer case skid plate.
3. Remove 3rd crossmember.
4. Remove torsion bar and front propeller shaft. Refer to removal procedure in Front Suspension section.
5. Disconnect front Heated oxygen (O_2) sensor connectors.
6. Remove front exhaust flange pipe three stud nuts and two rear flange nuts then disconnect exhaust pipe.
7. Remove heat protector two fixing bolts and remove unit.
8. Remove exhaust manifolds eight fixing nuts and the exhaust manifold.

Installation

1. Install exhaust manifold and tighten bolts to the specified torque.

   Torque : 52 N·m (38 lb ft)

   Torque : 44 N·m (33 lb ft)

   Tighten the bolt for EGR pipe bracket to specified torque.

   Torque : 25 N·m (18 lb ft)
2. Install heat protector
3. Install front exhaust flange pipe and tighten three stud nuts and rear two nuts to the specified torque.

   Torque:

   Stud nuts: 67 N·m (49 lb ft)

   Nuts: 43 N·m (32 lb ft)
4. Reconnect O_2 Sensor harness connector.
5. Install the torsion bar and readjust the vehicle height. Refer to installation and vehicle height adjustment procedure for Front Suspension.
6. Install front propeller shaft.

   Refer to installation procedue in Front suspension section.
7. Install 3rd crossmember.
8. Install transfer case skid plate.

Downloaded from www.Manualslib.com manuals search engine

Crankshaft Pulley

Removal

1. Disconnect battery ground cable.
2. Remove air cleaner assembly.

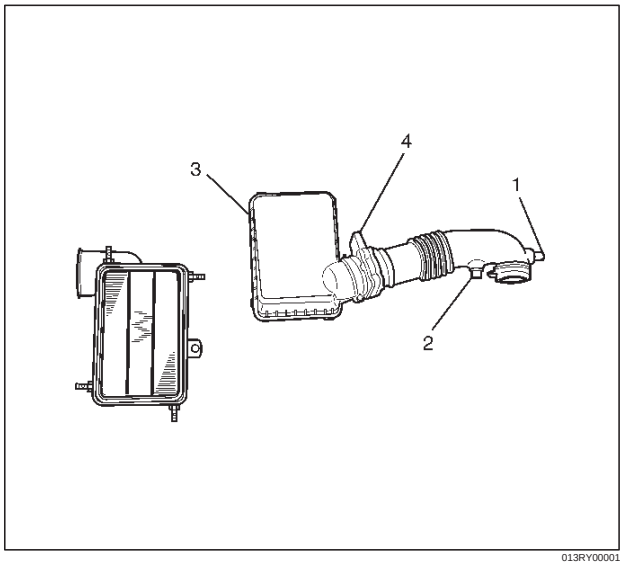

013RY00001

Legend

(1) Positive Crankcase Ventilation Hose Connector
(2) Intake Air Temperature Sensor
(3) Air Cleaner Duct Assembly
(4) Mass Air Flow Sensor

3. Remove radiator upper fan shroud from radiator.
4. Move serpentine belt tensioner to loose side using wrench then remove serpentine belt.

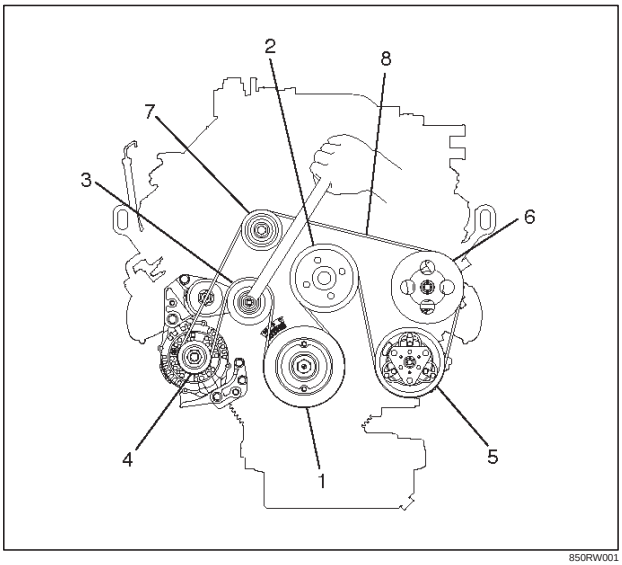

850RW001

Legend

(1) Crankshaft Pulley
(2) Cooling Fan Pulley
(3) Tensioner
(4) Generator
(5) Air Conditioner Compressor
(6) Power Steering Oil Pump
(7) Idle Pulley
(8) Driver Belt

5. Remove cooling fan assembly four fixing nuts, then the cooling fan assembly.
6. Remove crankshaft pulley assembly using J-8614-01 crankshaft holder, hold crankshaft pulley then remove center bolt and pulley.

Installation

1. Install crankshaft pulley using J-8614-01 crankshaft holder, hold the crankshaft pulley and tighten center bolt to the specified torque.

   Torque : 167 N·m (123 lb ft)

2. Install cooling fan assembly and tighten bolts/nuts to the specified torque.

   Torque : 22 N·m (16 lb ft) for fan pulley and fan bracket.

   Torque : 10 N·m (88.5 lb in) for fan and clutch assembly.

3. Move serpentine belt tensioner to loose side using wrench, then install serpentine belt to normal position.
4. Install radiator upper fan shroud.
5. Install air cleaner assembly.

Downloaded from www.Manualslib.com manuals search engine

Timing Belt

Removal

1. Disconnect battery ground cable.
2. Remove air cleaner assembly.
3. Remove radiator upper fan shroud from radiator.
4. Move drive belt tensioner to loose side using wrench then remove drive belt.

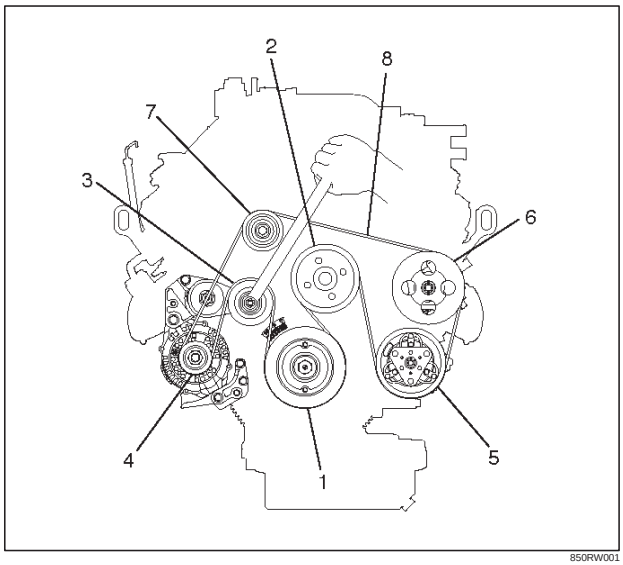

850RW001

Legend

(1) Crankshaft Pulley
(2) Cooling Fan Pulley
(3) Tensioner
(4) Generator
(5) Air Conditioner Compressor
(6) Power Steering Oil Pump
(7) Idle Pulley
(8) Drive Belt

5. Remove cooling fan assembly four nuts, then the cooling fan assembly.
6. Remove cooling fan drive pulley assembly.
7. Remove idle pulley assembly.
8. Remove serpentine belt tensioner assembly.
9. Remove power steering pump assembly.
10. Remove crankshaft pulley assembly using J-8614-01 crankshaft holder, hold crankshaft pulley remove center bolt, then the pulley.
11. Remove right side timing belt cover then left side timing belt cover.
12. Remove lower timing belt cover
13. Remove pusher.

CAUTION: The pusher prevents air from entering the oil chamber. Its rod must always be facing upward.

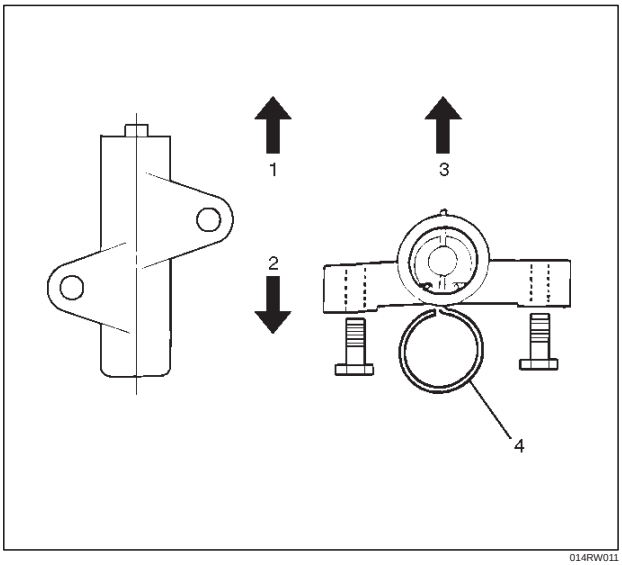

014RW011

Legend

(1) Up Side
(2) Down Side
(3) Direction For Installation
(4) Locking Pin

14. Remove timing belt.

CAUTION:

1. **Do not bend or twist the belt, otherwise its core could be damaged. The belt should not be bent at a radius less than 30 mm.**
2. **Do not allow oil or other chemical substances to come in contact with the belt. They will shorten the life.**
3. **Do not attempt to pry or stretch the belt with a screw driver or any other tool during installation.**
4. **Store timing belt in a cool and dark place. Never expose the belt direct sunlight or heat.**

Downloaded from www.Manualslib.com manuals search engine

Installation

NOTE: For correct belt installation, the letter on the belt must be able to be read as viewed from the front of the vehicle.

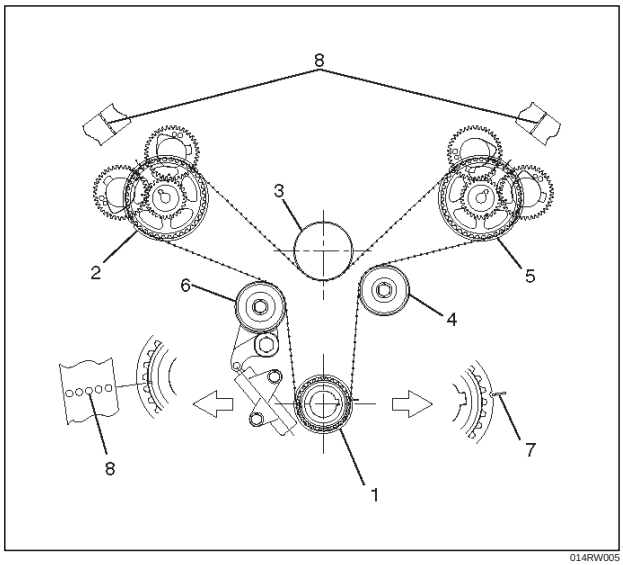

014RW005

Legend

(1) Crankshaft Timing Pulley
(2) RH Bank Camshaft Drive Gear Pulley
(3) Water Pump Pulley
(4) Idle Pulley
(5) LH Bank Camshaft Drive Gear Pulley
(6) Tension Pulley
(7) Alignment Mark on Oil Pump.
(8) Alignment Mark on Timing Belt

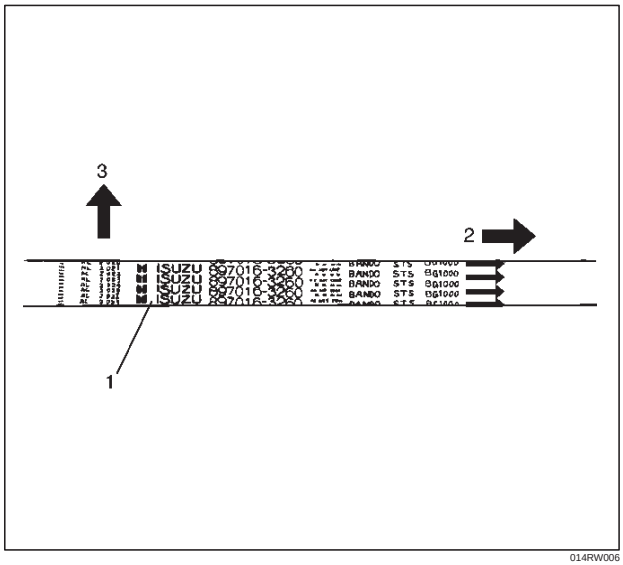

014RW006

Legend

(1) Timing Belt
(2) Engine Rotation Direction
(3) Cylinder Head Side

1. Install timing belt.
   1. Align groove of crankshaft timing pulley with mark on oil pump.
      Align the mark on the crankshaft timing pulley with alignment mark (white dotted line) on the timing belt.
      Secure the belt with a double clip.

NOTE: When timing marks are aligned, No.2 piston will be on Top Dead Center.

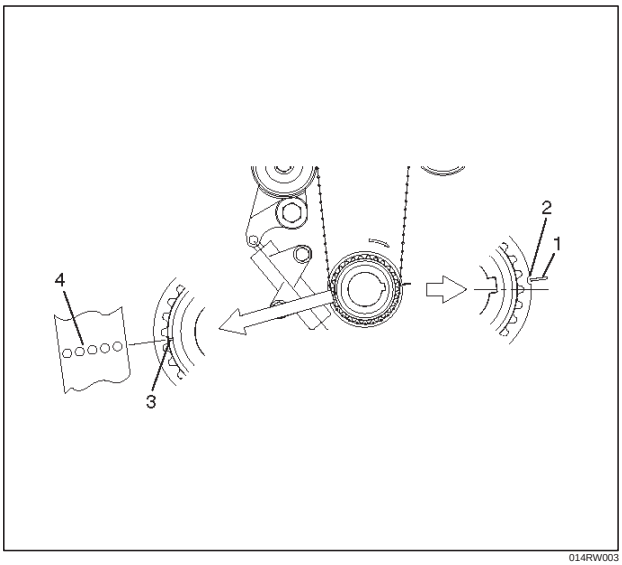

014RW003

Legend

(1) Alignment Mark on Oil Pump
(2) Groove on Crankshaft Timing Pulley
(3) Alignment Mark on Crankshaft Timing Pulley
(4) Alignment Mark on Timing Belt

Downloaded from www.Manualslib.com manuals search engine

2. Align the marks on the camshaft drive gear pulleys with the corresponding alignment marks on the cylinder head covers.

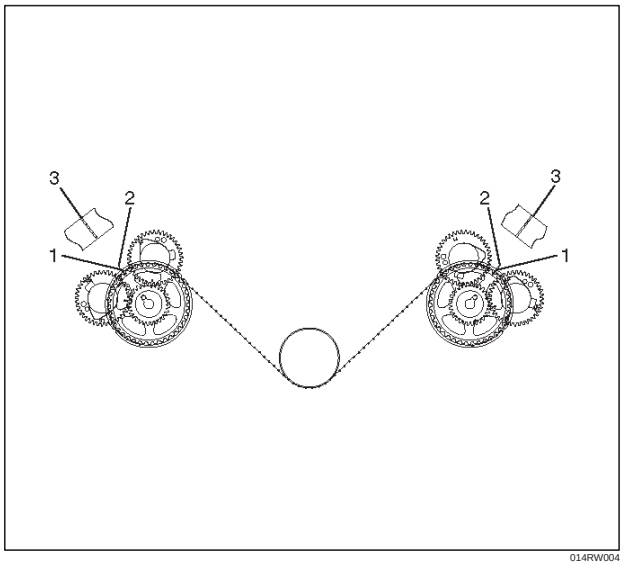

014RW004

Legend

(1) Alignment Mark on Camshaft Drive Gear Pulley
(2) Alignment Mark on Cylinder Head Cover.
(3) Alignment Mark on Timing Belt (White Line)

3. Align the alignment mark (white line) on the timing belt with alignment mark on the RH bank camshaft drive gear pulley (on the left side as viewed from the front of the vehicle).

   Secure the belt with a double clip.

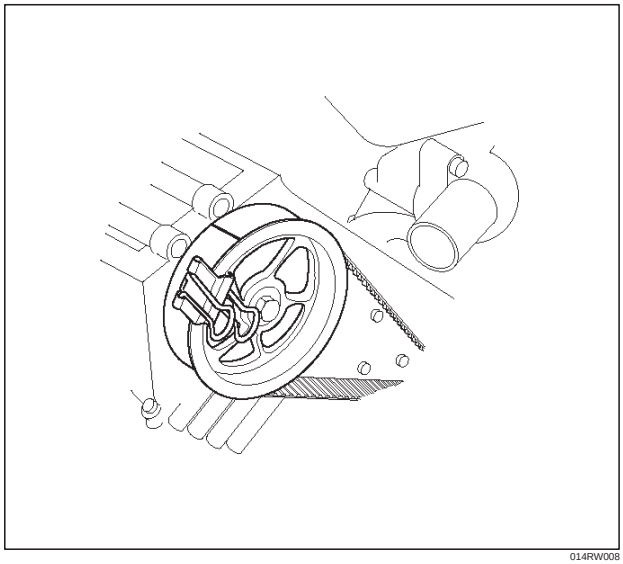

014RW008

4. Align the alignment mark (white line) on the timing belt with the alignment mark on the LH bank camshaft drive gear pulley.

   When aligning the timing marks, use a wrench to turn the camshaft drive gear pulley, then set the timing mark between timing belt and camshaft drive gear pulley.
   Secure the belt with a double clip.

NOTE: It is recommended for easy installation that the belt be secured with a double clip after it is installed to each pulley.

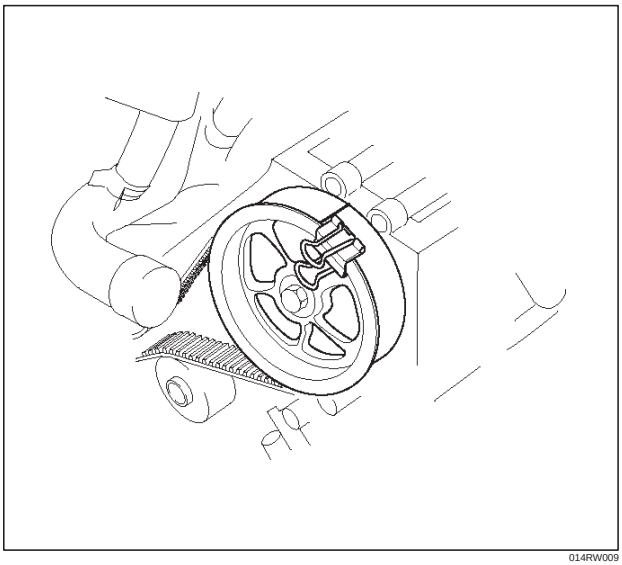

014RW009

5. Install crankshaft pulley temporarily and tighten center bolt by hand (do not use a wrench).

   Turn the crankshaft pulley clockwise to give some belt slack between the crankshaft timing pulley and the RH bank camshaft drive gear pulley.

2. Install pusher and tighten bolt to the specified torque.
   1. Install the pusher while pushing the tension pulley to the belt.
   2. Pull out pin from the pusher.

NOTE: When reusing the pusher, press the pusher with approximately 100Kg to retract the rod, and insert a pin (1.4 mm piano wire).

Downloaded from www.Manualslib.com manuals search engine

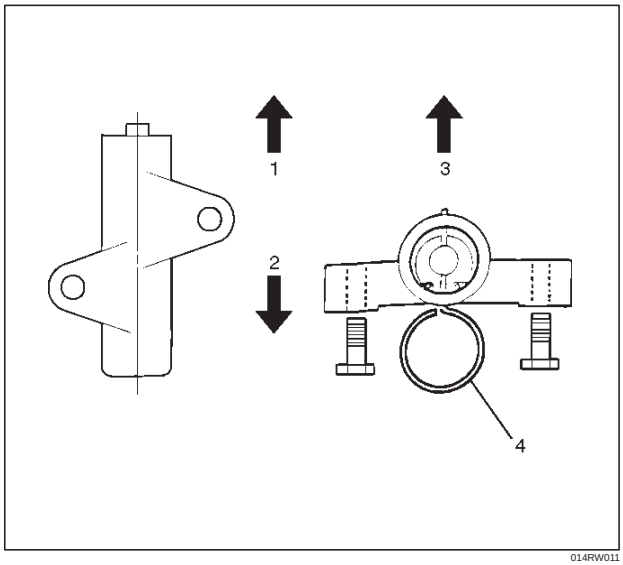

014RW011

Legend
(1) Up Side
(2) Down Side
(3) Direction for Installation
(4) Locking Pin

3. Remove double clips from timing belt pulleys.
   Turn the crankshaft pulley clockwise by two turns.

Torque : 25 N·m (18 lb ft)

3. Install timing belt cover.
   Remove crankshaft pulley that was installed in step 1 item 5.
   Tighten bolts to the specified torque.

Torque: 19 N·m (14 lb ft)

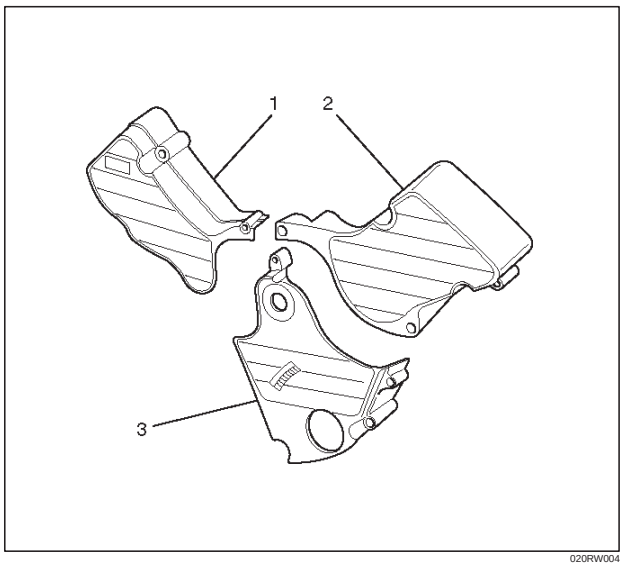

020RW004

Legend
(1) Timing Belt Cover RH
(2) Timing Belt Cover LH
(3) Timing Belt Cover Lower

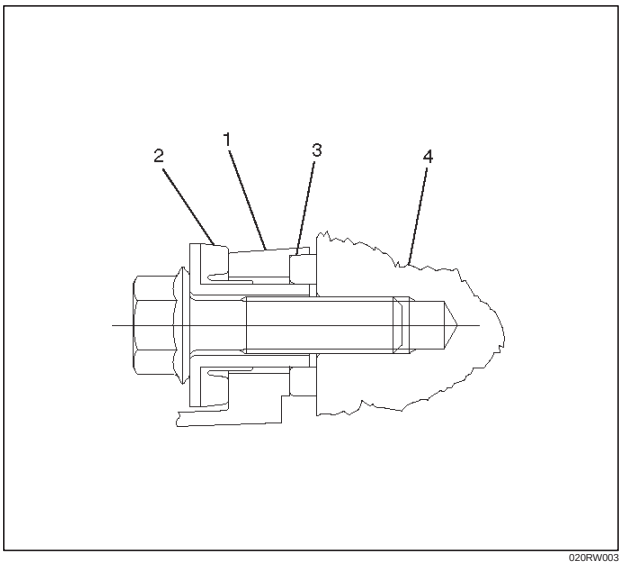

020RW003

Legend
(1) Timing Belt Cover
(2) Rubber Bushing
(3) Sealing Rubber
(4) Cylinder Body

4. Install crankshaft pulley using J-8614-01, hold the crankshaft pulley and tighten center bolt to the specified torque.

Torque : 167 N·m (123 lb ft)

5. Install fan pulley bracket and tighten fixing bolts to the specified torque.

Torque : 22 N·m (16 lb ft)

6. Install power steering pump assembly and tighten to the specified torque.

Torque :

M8 bolt : 22 N·m (16 lb ft)

M10 bolt : 46 N·m (34 lb ft)

7. Install cooling fan assembly and tighten bolts/nuts to the specified torque.

Torque : 22 N·m (16 lb ft) for fan pulley and fan bracket.

Torque : 10 N·m (88.5 lb in) for fan and clutch assembly.

Downloaded from www.Manualslib.com manuals search engine

8. Move drive belt tensioner to loose side using wrench, then install drive belt to normal position.

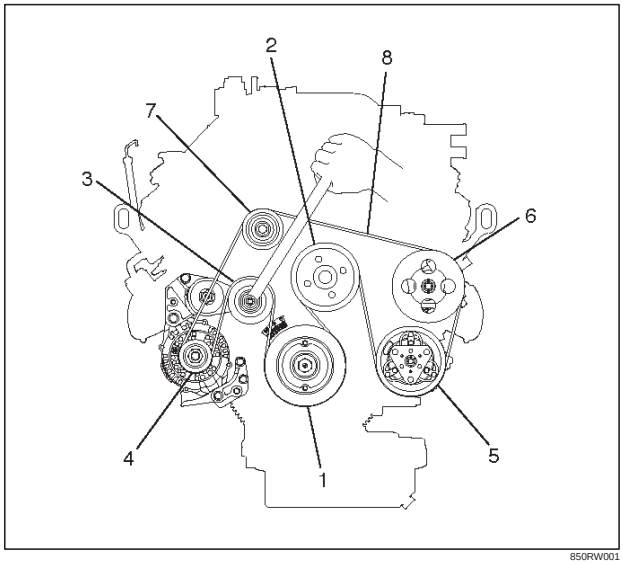

850RW001

Legend

(1) Crankshaft Pulley
(2) Cooling Fan Pulley
(3) Auto Tensioner
(4) Generator
(5) Air Conditioner Compressor
(6) Power Steering Oil Pump
(7) Idle Pulley
(8) Drive Belt

9. Install radiator upper fan shroud.
10. Install air cleaner assembly.

Downloaded from www.Manualslib.com manuals search engine

Camshaft

Removal

1. Disconnect battery ground cable.
2. Remove crankshaft pulley.
   - Refer to removal procedure for Crankshaft Pulley in this manual.
3. Remove timing belt.
   - Refer to removal procedure for Timing Belt in this manual.
4. Remove cylinder head cover LH.
   - Refer to removal procedure for Cylinder Head Cover LH in this manual.
5. Remove cylinder head cover RH.
   - Refer to removal procedure for Cylinder Head Cover RH in this manual.
6. Remove twenty fixing bolts from inlet and exhaust camshaft bearing cap on one side bank, then camshaft bearing caps.

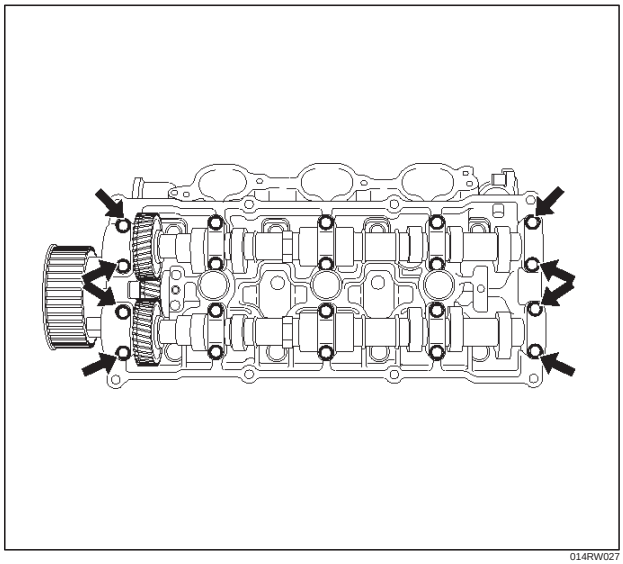

014RW027

7. Remove camshaft assembly.
8. Remove fixing bolt for camshaft drive gear pulley.
9. Remove three fixing bolts from camshaft drive gear retainer, then camshaft drive gear assembly.

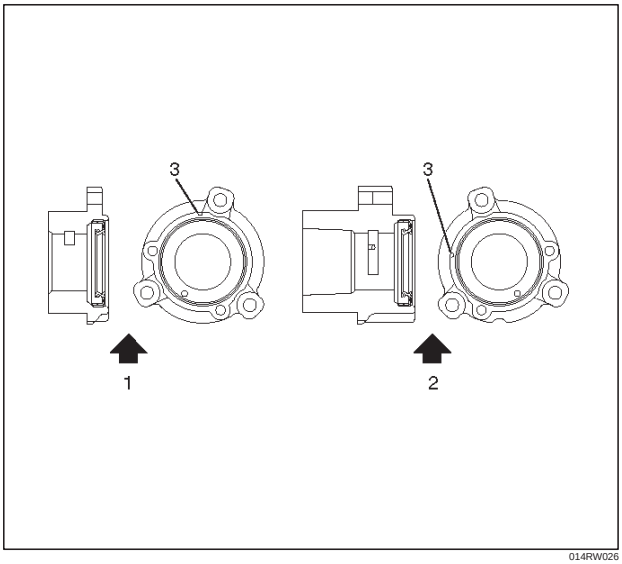

014RW026

Legend

(1) Right Bank
(2) Left Bank
(3) Timing Mark on Retainer

Installation

1. Install camshaft drive gear assembly and tighten three bolts to the specified torque.

   Torque : 10 N·m (89 lb in)

2. Tighten bolt for camshaft drive gear assembly pulley to the specified torque.

   Torque : 98 N·m (72 lb ft)

3. Tighten sub gear setting bolt.
   1. Use the J–42686 gear spring lever to turn sub gear to right direction until it aligns with the M5 bolt hole between camshaft driven gear and sub gear.
   2. Tighten the M5 bolt to a suitable torque to prevent the sub gear from moving.

Downloaded from www.Manualslib.com manuals search engine

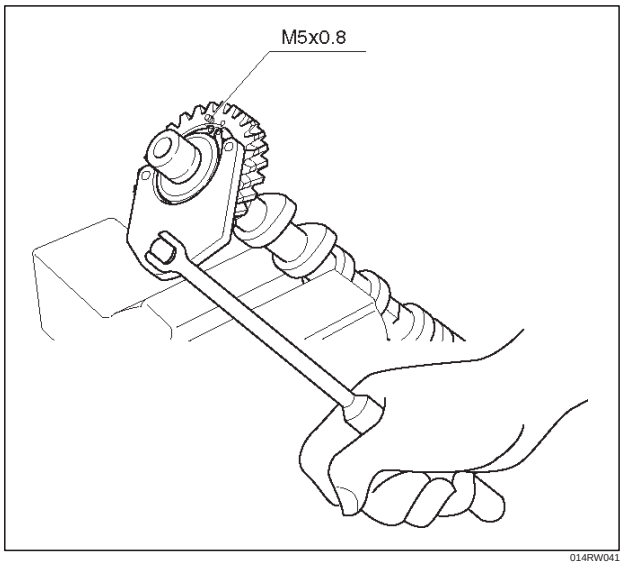

014RW041

4. Install camshaft assembly and camshaft bearing caps, tighten twenty bolts on one side bank to the specified torque.
   1. Apply engine oil to camshaft journal and bearing surface of camshaft bearing cap.
   2. Align timing mark on intake camshaft (one dot for right bank, two dots for left bank) and exhaust camshaft (one dot for right bank, two dots for left bank) to timing mark on camshaft drive gear (one dot).

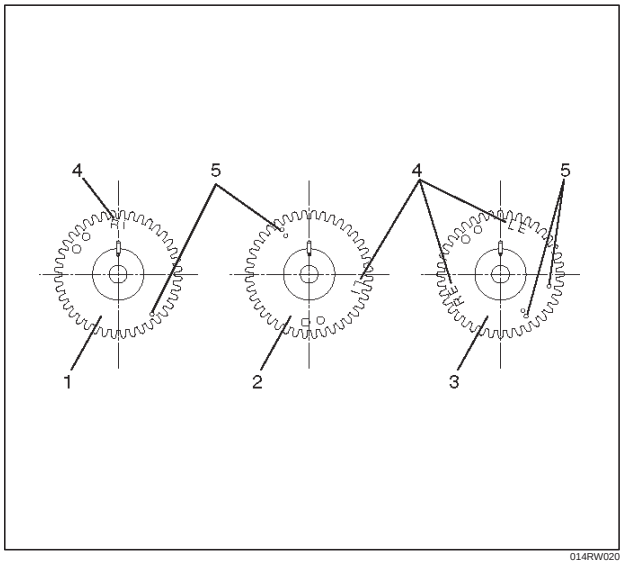

014RW020

Legend

(1) Intake Camshaft Timing Gear for Right Bank
(2) Intake Camshaft Timing Gear for Left Bank
(3) Exhaust Camshaft Timing Gear
(4) Discrimination Mark
(LI: Left bank intake, RI: Right bank intake)
(LE: Left bank exhaust, RE: Right bank exhaust)

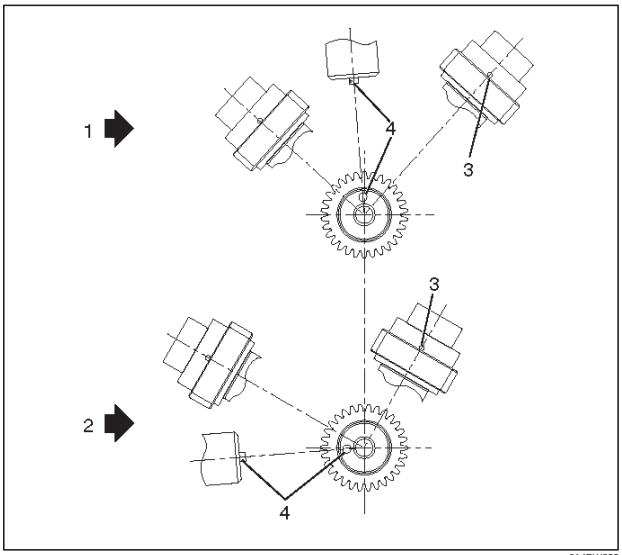

014RW023

Legend

(1) Right Bank Camshaft Drive Gear
(2) Left Bank Camshaft Drive Gear
(3) Timing Mark on Drive Gear
(4) Dowel Pin

Downloaded from www.Manualslib.com manuals search engine

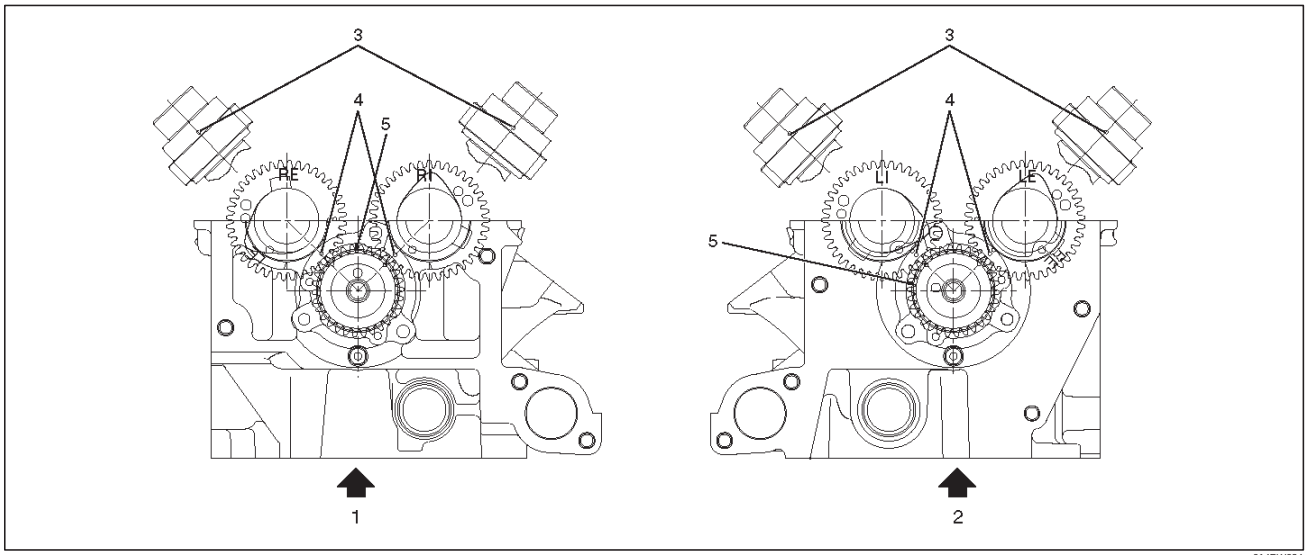

014RW024

Legend

(1) Right Bank
(2) Left Bank
(3) Alignment Mark on Camshaft Drive Gear
(4) Alignment Mark on Camshaft
(5) Alignment Mark on Retainer

3. Tighten twenty bolts on numerical order an one side bank as shown in the illustration.

Torque : 10 N·m (89 lb in)

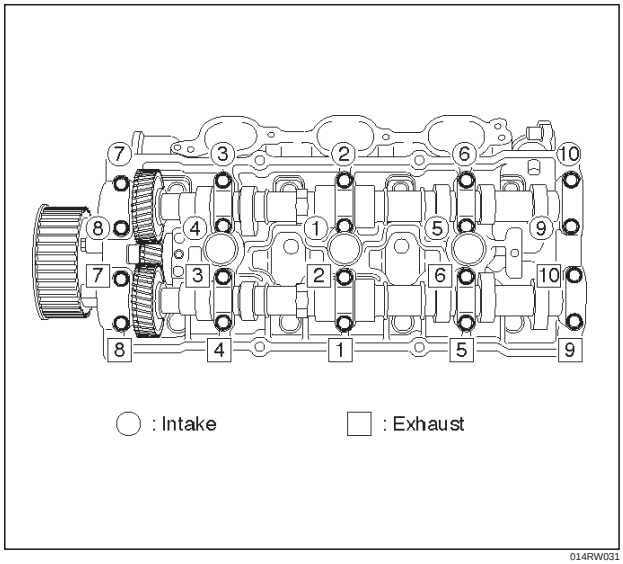

014RW031

5. Install cylinder head cover RH.
   - Refer to installation procedure for CYLINDER HEAD COVER RH in this manual.
6. Install cylinder head cover LH.
   - Refer to installation procedure for CYLINDER HEAD COVER LH in this manual.
7. Install timing belt.
   - Refer to installation procedure for TIMING BELT in this manual.
8. Install crankshaft pulley.
   - Refer to installation procedure for CRANKSHAFT PULLEY in this manual.

Downloaded from www.Manualslib.com manuals search engine

Cylinder Head

Removal

1. Remove engine hood.
2. Disconnect battery ground cable.
3. Drain radiator coolant.
4. Drain engine oil.
5. Remove crankshaft pulley.
   - Refer to removal procedure for Crankshaft Pulley in this manual.
6. Remove timing belt.
   - Refer to removal procedure for Timing Belt in this manual.
7. Remove cylinder head cover LH.
   - Refer to removal procedure for Cylinder Head Cover LH in this manual.
8. Remove cylinder head cover RH.
   - Refer to removal procedure for Cylinder Head Cover RH in this manual.
9. Remove common chamber.
   - Refer to removal procedure for Common Chamber in this manual.
10. Remove cylinder head assembly.
    A. Loosen head bolts in reverse of tightening sequence.
    B. Remove cylinder head assembly.

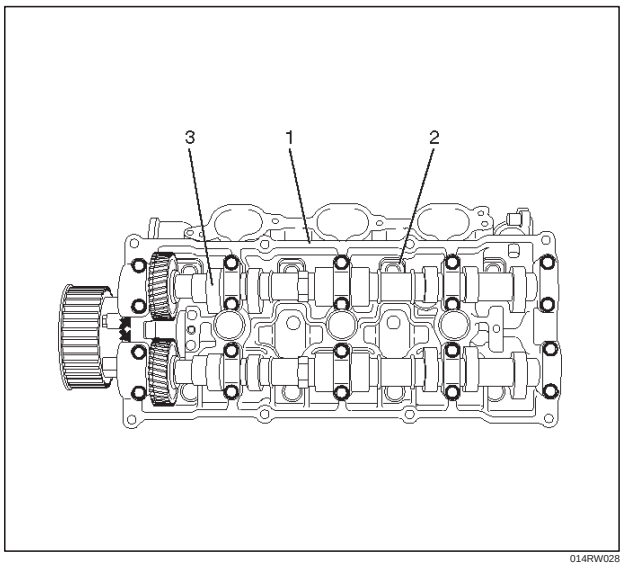

014RW028

Legend

(1) Cylinder Head
(2) Cylinder Head Bolt
(3) Camshaft

Installation

1. Install cylinder head assembly to cylinder block.
   A. Put cylinder head gasket on the cylinder block.

NOTE: There is discrimination mark “R” for right bank and “L” for left bank on the cylinder head gasket as shown in the illustration.

Do not reuse cylinder head gasket.

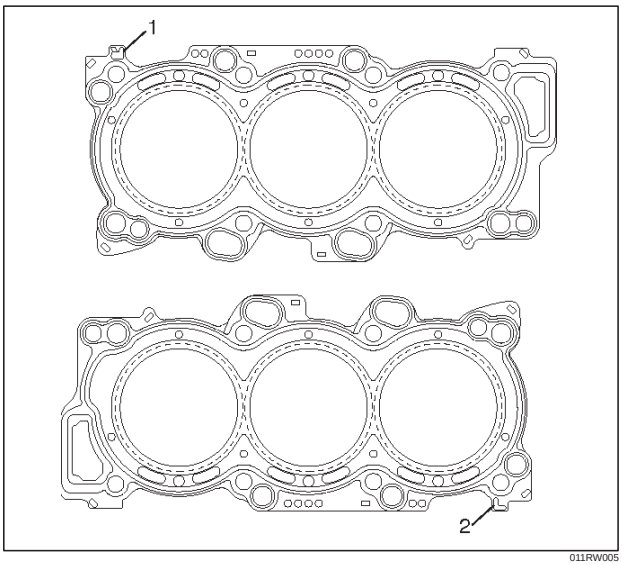

011RW005

   B. Align dowel pin hole to dowel pin on the cylinder block.
   C. Position cylinder head on the cylinder block.
   D. Tighten two bolts temporarily by hand to prevent the cylinder head assembly from moving.
   E. Using J-24239-01 cylinder head bolt wrench, tighten bolts in numerical order as shown in the illustration to the specified torque.

Downloaded from www.Manualslib.com manuals search engine

NOTE: Do not reuse cylinder head bolts.

Do not apply any lubricant to the cylinder head bolts.

Torque :

Temporary : 29 N·m (21 lb ft)

Final : 64 N·m (47 lb ft)

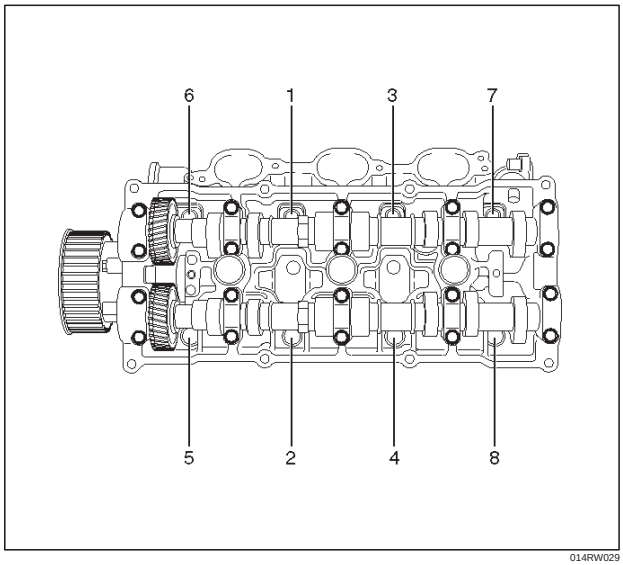

014RW029

2. Install common chamber.
   - Refer to installation procedure for Common Chamber in this manual.
3. Install cylinder head cover RH.
   - Refer to installation procedure for Cylinder Head Cover RH in this manual.
4. Install cylinder head cover LH.
   - Refer to installation procedure for Cylinder Head Cover LH in this manual.
5. Install timing belt.
   - Refer to installation procedure for Timing Belt in this manual.
6. Install crankshaft pulley.
   - Refer to installation procedure for Crankshaft Pulley in this manual.

Downloaded from www.Manualslib.com manuals search engine

Valve Stem Oil Controller , Valve Spring and Valve Guide

Removal

1. Disconnect battery ground cable.
2. Drain engine oil.
   - Drain engine coolant.
3. Remove cylinder head assembly.
   - Refer to removal procedure for Cylinder Head in this manual.
4. Remove camshaft.
   - Refer to removal procedure for Camshaft in this manual.
5. Remove tappets with shim.

NOTE: Do not damage shim surface.

6. Remove valve springs using J–8062 valve spring compressor and J–42898 valve spring compressor adapter then remove upper valve spring seat and lower seat.

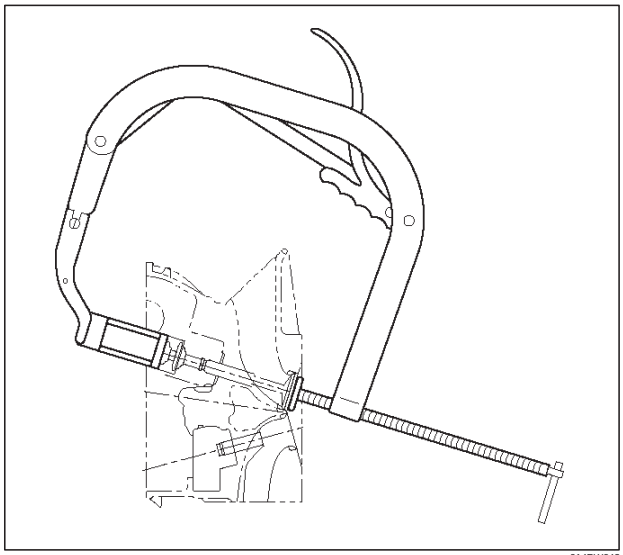

014RW042

7. Remove oil controller using J–37281 oil controller remover, remove each valve stem oil controller.
8. Remove valve guide using J–37985 valve guide replacer.

Installation

1. Install valve guide using J–42899 valve guide installer.
2. Install oil controller using J–38537 oil controller installer.
3. Install lower valve spring seat, valve spring and upper valve spring seat then put split collars on the upper spring seat, using J–8062 valve spring compressor and J–42898 valve spring compressor adapter to install the split collars.

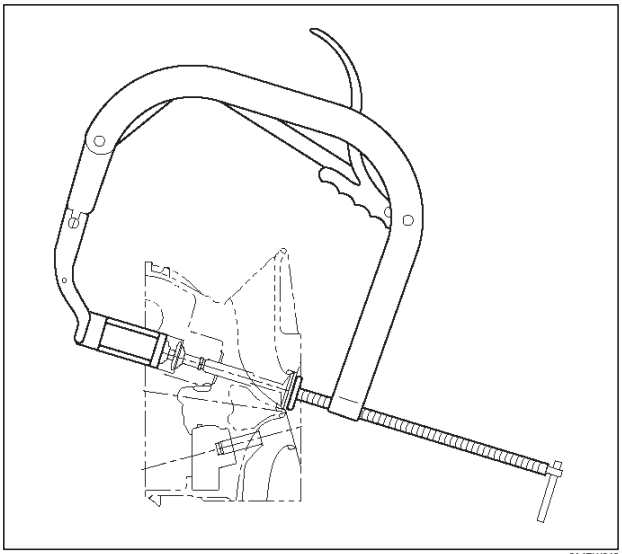

014RW042

4. Install tappet with shim.
5. Install camshaft assembly.
   - Refer to installation procedure for Camshaft in this manual.
6. Install cylinder head assembly.
   - Refer to installation procedure for Cylinder Head in this manual.
7. Fill engine oil until full level.
8. Fill engine coolant.

Downloaded from www.Manualslib.com manuals search engine

Piston, Piston Ring and Connecting Rod

Removal

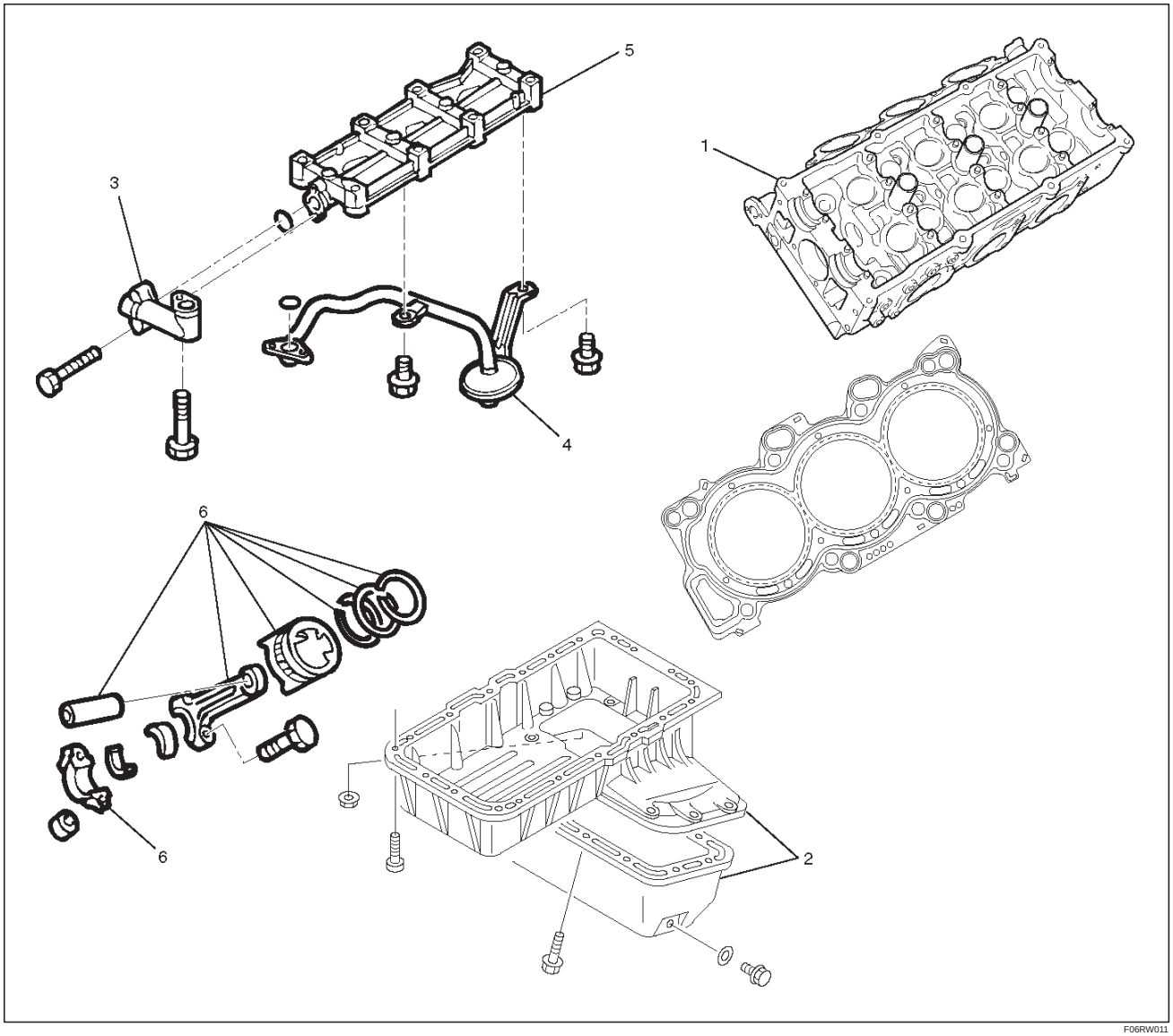

F06RW011

Legend

(1) Cylinder Head
(2) Crankcase with Oil Pan
(3) Oil Pipe
(4) Oil Strainer
(5) Oil Gallery
(6) Piston with Connecting Rod Assembly

1. Remove cylinder head assembly.
   - Refer to removal procedure for Cylinder Head in this manual.
2. Remove crankcase with Oil Pan.
   - Refer to removal procedure for Oil Pan and Crankcase in this manual.

Downloaded from www.Manualslib.com manuals search engine

3. Remove oil strainer fixing bolts, remove oil strainer assembly with O-ring.

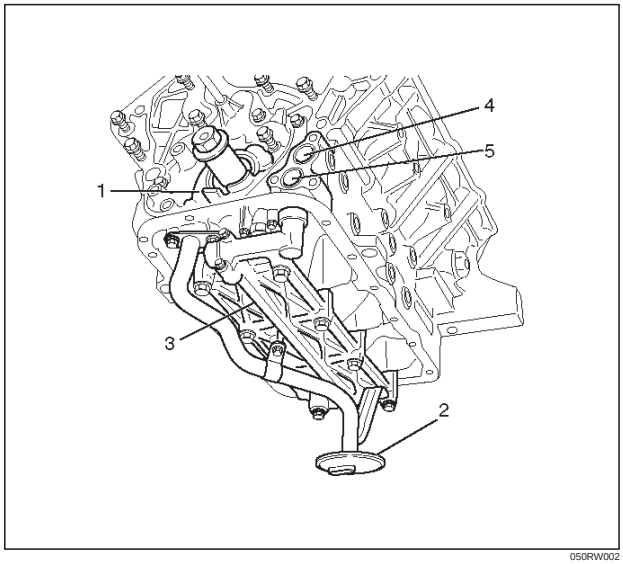

050RW002

Legend

(1) Oil Pump
(2) Oil Strainer
(3) Oil Gallery
(4) From Oil Filter
(5) To Oil Filter

4. Remove three fixing bolts, oil pipe with O-ring.
5. Remove eight fixing bolts, oil gallery.
6. Remove piston with connecting rod assembly. (before removing the bearing cap, remove carbon on the top of cylinder bore and push piston with connecting rod out from the top of cylinder bore.)

Installation

1. Install piston with connecting rod assembly.
   - Apply engine oil to cylinder bore, connecting rod bearing and crank pin.
     When installing the piston, its front mark must face the engine front side.
   - The bearing cap number must be the same as connecting rod number.
   - Apply engine oil to the thread and seating surface of each nut.
   - Tighten nuts to the specified torque.

   Torque : 54 N·m (40 lb ft)

   - After tightening the nuts, make sure that the crankshaft rotates smoothly.

NOTE: Do not apply engine oil to the bearing back faces and connecting rod bearing fitting surfaces.

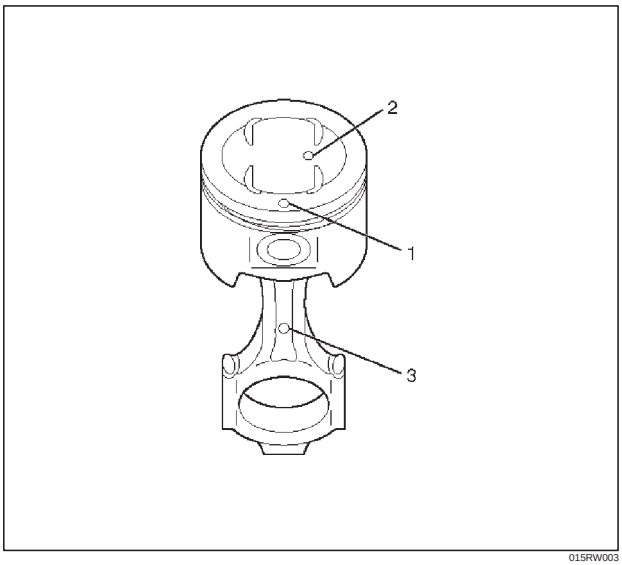

015RW003

Legend

(1) Piston Front Mark
(2) Piston Grade
(3) Connecting Rod Front Mark

2. Install oil gallery and tighten the bolts in two steps, in the order shown in illustration.

   Torque :

   1st step : 29 N·m (21 lb ft)

   2nd step : 55˚–65˚

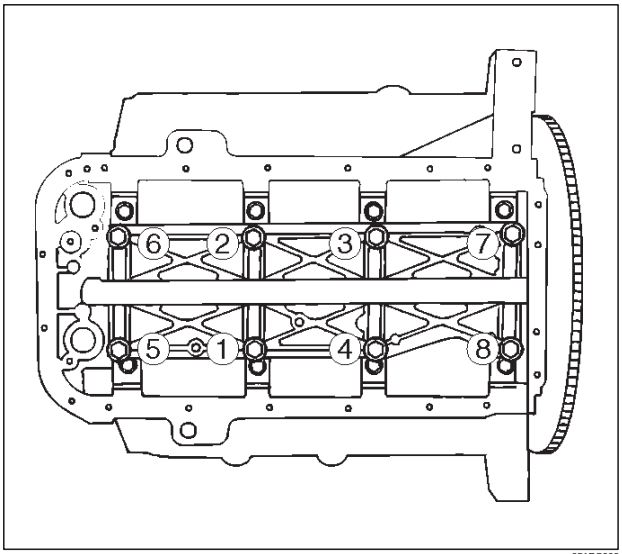

051RS009

3. Install oil pipe with O-ring.

   Torque : 10 N·m (89 lb in)

4. Install oil strainer assembly with O-ring.

   Torque : 25 N·m (18 lb ft)

5. Install crankcase with Oil Pan.
   - Refer to installation procedure for Oil Pan and Crankcase in this manual.
6. Install cylinder head assembly.
   - Refer to installation procedure for Cylinder Head in this manual.

Downloaded from www.Manualslib.com manuals search engine

Crankshaft and Main Bearings

Removal

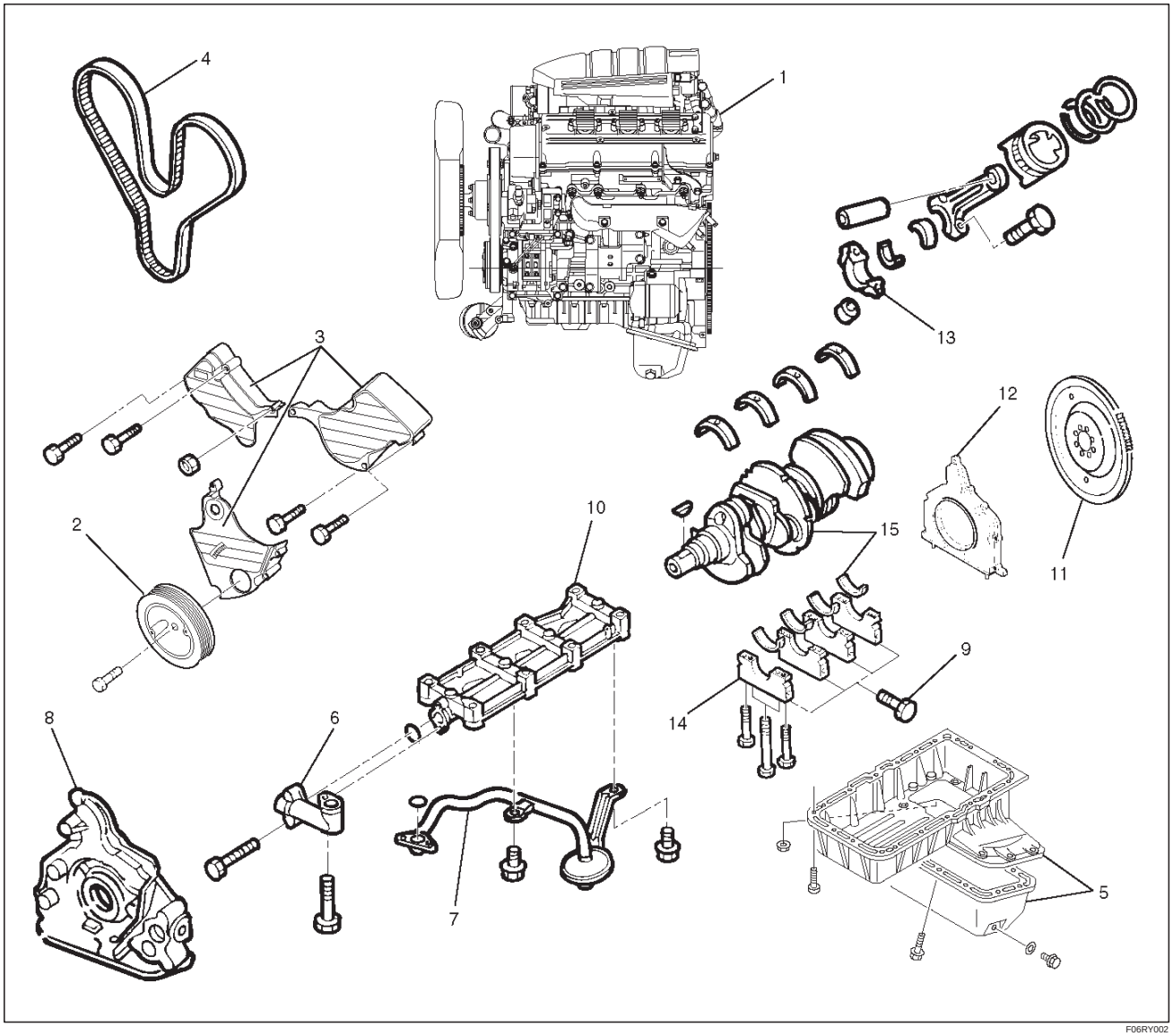

F06RY002

Legend

(1) Engine Assembly
(2) Crankshaft Pulley
(3) Timing Belt Cover
(4) Timing Belt
(5) Crankcase with Oil Pan
(6) Oil Pipe
(7) Oil Strainer
(8) Oil Pump Assembly
(9) Cylinder Body Side Bolt
(10) Oil Gallery
(11) Flywheel
(12) Rear Oil Seal Retainer
(13) Connecting Rod Cap
(14) Crankshaft Main Bearing Cap
(15) Crankshaft and Main Bearing

1. Remove engine assembly.
   - Refer to removal procedure for Engine Assembly in this manual.
2. Remove timing belt.
   - Refer to removal procedure for Timing Belt in this manual.
3. Remove oil pan and crankcase.
   - Refer to removal procedure for Oil Pan and Crankcase in this manual.
4. Remove oil pipe with O-ring.
5. Remove oil strainer assembly with O-ring.

Downloaded from www.Manualslib.com manuals search engine

6. Remove oil pump assembly.
   - Refer to removal procedure for Oil Pump in this manual.
7. Remove cylinder body side bolts.
8. Remove oil gallery.
9. Remove flywheel.
10. Remove rear oil seal retainer.
    - Refer to removal procedure for Rear Oil Seal in this manual.
11. Remove connecting rod caps.
12. Remove crankshaft main bearing caps.
13. Remove crankshaft and main bearings.

Installation

1. Install crankshaft and main bearings.
   - Install main bearing in the cylinder block and main bearing cap respectively.
     Apply new engine oil to upper and lower main bearings.

NOTE:

- Do not apply engine oil to the bearing back faces.
- Make sure that main bearings are in correct position.
- Install crankshaft with care.
- Apply engine oil to the thrust washer.
- Install thrust washer on No.3 journal.
- Oil grooves in thrust washer must face the crankshaft.

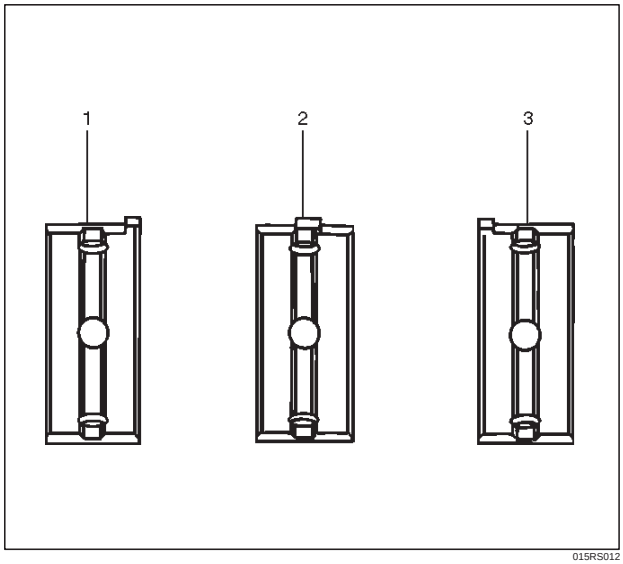

015RS012

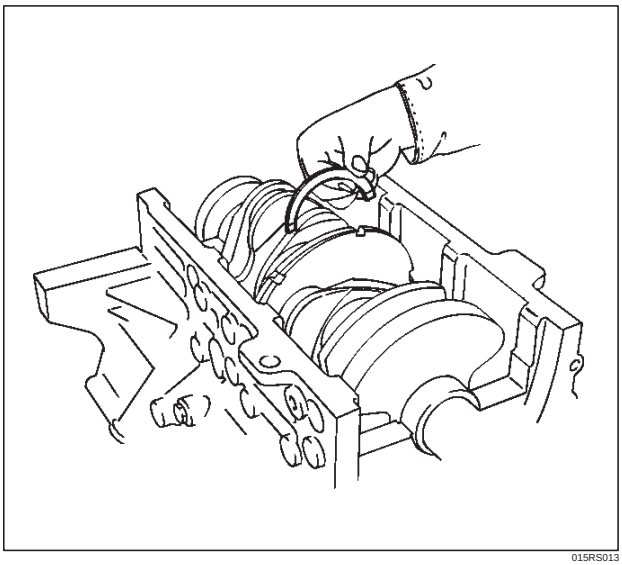

015RS013

2. Install crankshaft main bearing caps.
   - Apply engine oil to the thread and seating surface of each bearing cap fixing bolt.

NOTE:

- Do not apply engine oil to the bearing back faces.
- Install bearing caps, starting with cylinder block front side.
- Tighten main bearing fixing bolts to the specified torque.

  Torque : 39 N·m (29 lb ft)
- After tightening the bolts, make sure that the crankshaft rotates smoothly.

3. Install connecting rod caps.
   - The cap number must be same as connecting rod number.
   - Apply engine oil to the thread and seating surface of each nut.
   - Tighten nuts to the specified torque.

   Torque : 54 N·m (40 lb ft)
   - After tightening the nuts, make sure that the crankshaft rotates smoothly.
4. Install rear oil seal retainer.
   - Remove oil on cylinder block and retainer fitting surface.
   - Apply sealant (TB1207B or equivalent) to retainer fitting surface as shown in illustration.

Downloaded from www.Manualslib.com manuals search engine

- The oil seal retainer must be installed within 5 minutes after sealant application before the sealant hardens.

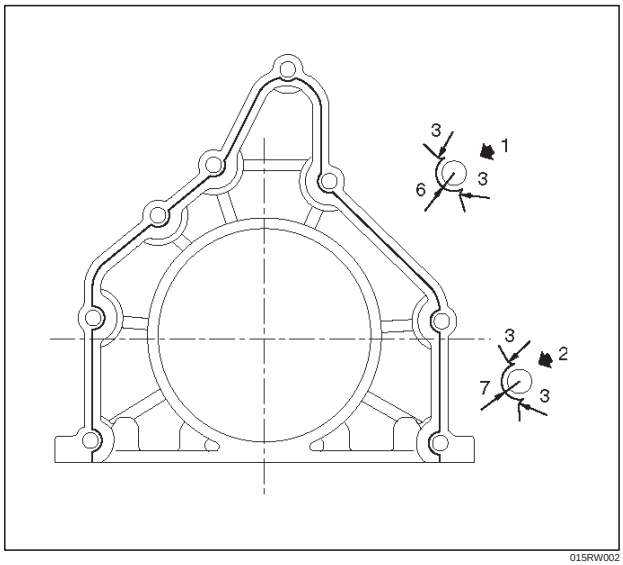

015RW002

Legend

(1) Around Bolt Holes
(2) Around Dowel Pin

- Apply engine oil to oil seal lip and align a dowel pin hole in the cylinder block with that in the retainer.
- Tighten retainer fixing bolts to the specified torque.

Torque : 18 N·m (13 lb ft)

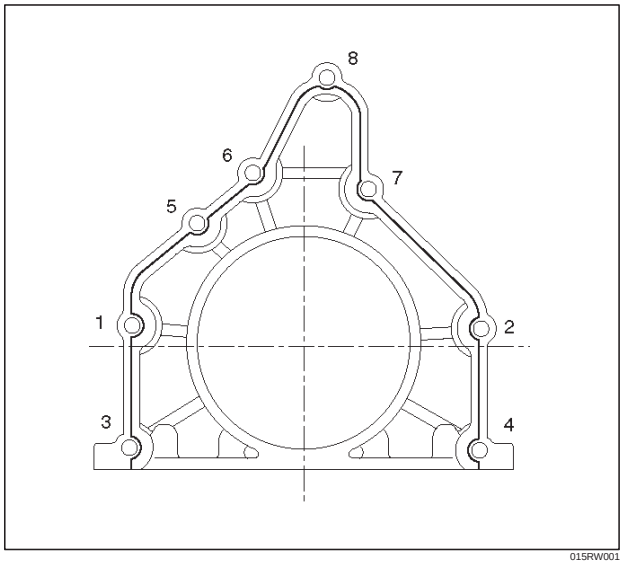

015RW001

5. Install flywheel.
   - Clean tapped holes in the crankshaft.
   - Remove oil on crankshaft and flywheel fitting surface.

NOTE:

- Do not reuse the bolts.
- Do not apply oil or thread lock to the bolts.
- Tighten fixing bolts to the specified torque.

Torque : 54 N·m (40 lb ft)

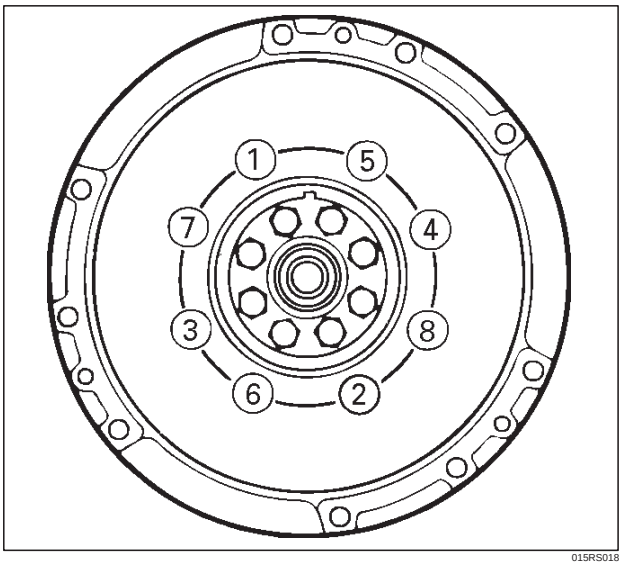

015RS018

6. Install oil gallery.
   - Clean contact surface of oil gallery and main bearing cap.
     Apply engine oil to oil gallery fixing bolts and tighten the bolts in two steps, in the order shown in illustration.

Torque :

1st step : 29 N·m (21 lb ft)

2nd step : 55˚–65˚

7. Install cylinder body side bolts and tighten bolts in order to the specified torque.

Torque : 39 N·m (29 lb ft)

NOTE: Do not apply the oil to the bolts.

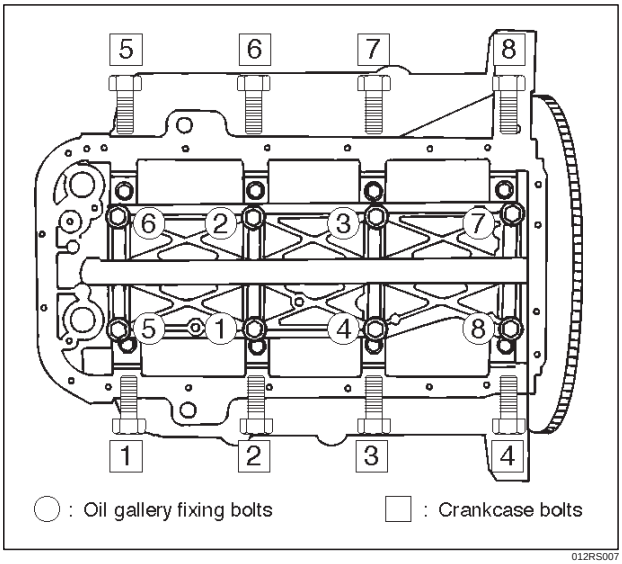

012RS007

8. Install oil pump assembly.
   - Remove oil on cylinder block and oil pump mounting surface.

Downloaded from www.Manualslib.com manuals search engine

- Apply sealant (TB1207B or equivalent) to the oil pump mounting surface.
- The oil pump assembly must be installed within 5 minutes after sealant application before the sealant hardens.
- Apply engine oil to oil seal lip.
- Install oil pump in the cylinder block and tighten fixing bolts to the specified torque.

Torque : 25 N·m (18 lb ft)

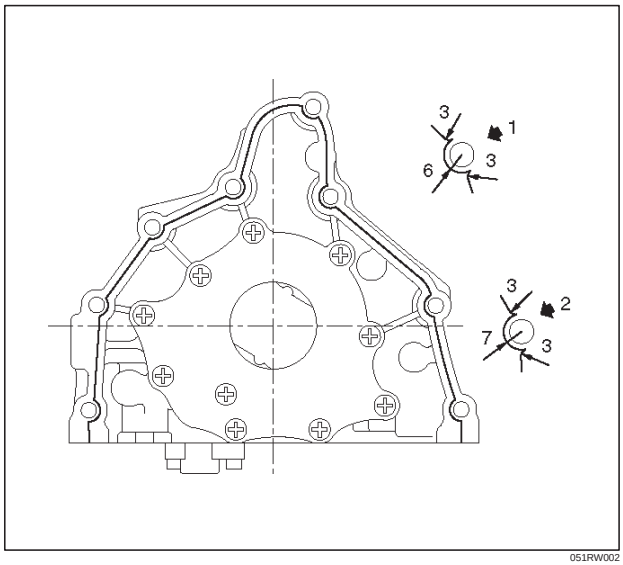

051RW002

Legend

(1) Around Bolt Holes
(2) Around Dowel Pin

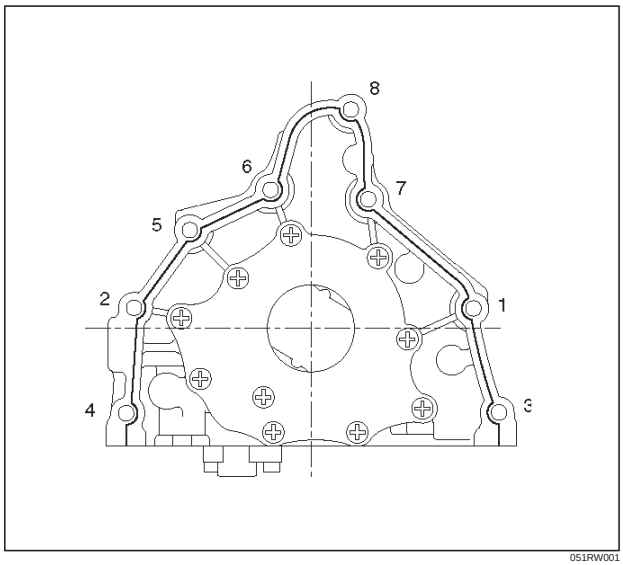

051RW001

9. Install oil strainer with O-ring, tighten to the specified torque.

   Torque : 25 N·m (18 lb ft)

10. Install oil pipe with O-ring, tighten fixing bolts to the specified torque.

    Torque : 25 N·m (18 lb ft)

11. Install crankcase.
    - Remove oil on crankcase mounting surface and dry the surface.
    - Properly apply a 4.5 mm (0.7 in) wide bead of sealant (TB1207C or equivalent) to the crankcase mounting surface. The bead must be continuous.
    - The crankcase must be installed within 5 minutes after sealant application before the sealant hardens.
    - Tighten fixing bolts to the specified torque.

    Torque : 10 N·m (89 lb in)

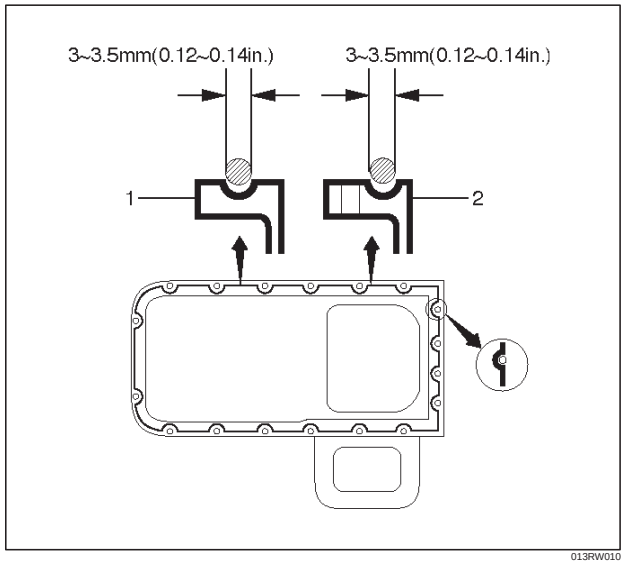

013RW010

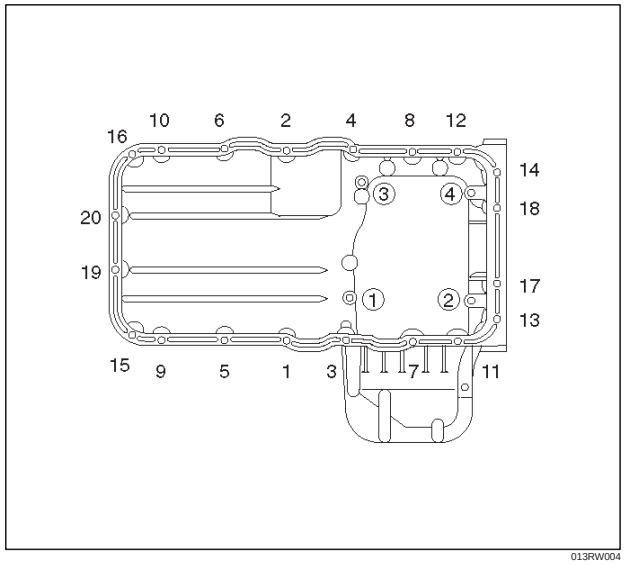

013RW004

12. Install oil pan
    - Remove oil on oil pan mounting surface and dry the surface.
    - Properly apply a 4.5 mm (0.7 in) wide bead of sealant (TB1207C or equivalent) to the oil pan mounting surface. The bead must be continuous.
    - The oil pan must be installed within 5 minutes after sealant application to prevent premature hardening of sealant.

Downloaded from www.Manualslib.com manuals search engine

- Tighten fixing bolts to the specified torque.

Torque : 25 N·m (18 lb ft)

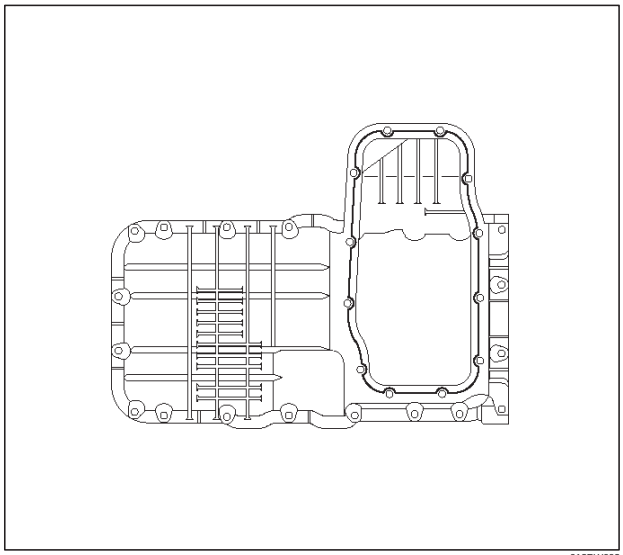

013RW003

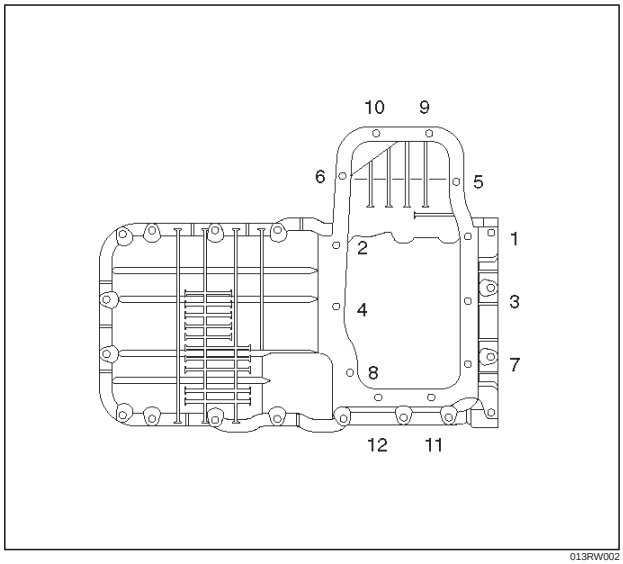

013RW002

13. Install timing belt.
    - Refer to installation procedure for Timing Belt in this manual.
14. Install engine assembly.
    - Refer to installation procedure for Engine in this manual.

Downloaded from www.Manualslib.com manuals search engine

Rear Oil Seal

Removal

1. Remove transmission assembly.
   - Refer to removal procedure for Transmission section in this manual.
2. Remove flywheel.
3. Remove rear oil seal using a seal remover.

NOTE: Take care not to damage the crankshaft or oil seal retainer when removing oil seal.

Installation

1. Apply engine oil to oil seal lip and install oil seal using J-39201.

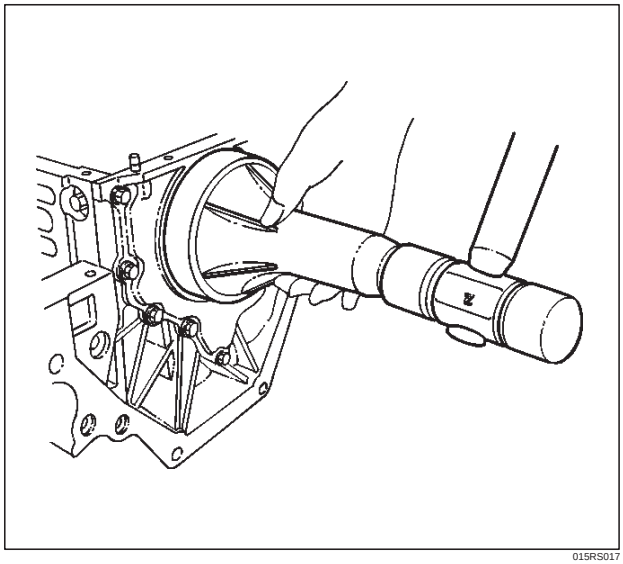

015RS017

2. Install flywheel.
   - Clean tapped holes in the crankshaft.
   - Remove oil on the crankshaft and flywheel mounting surface.
   - Tighten fixing bolts to the specified torque.

NOTE: Do not reuse the bolts and do not apply oil or thread lock to the bolts.

Torque : 54 N·m (40 lb ft)

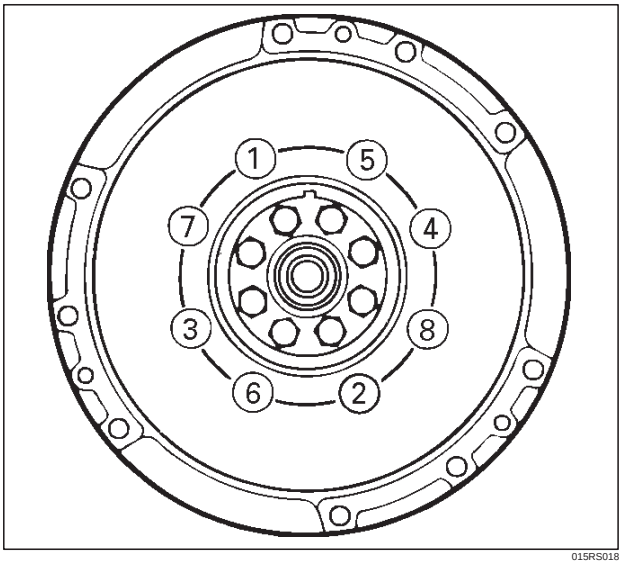

015RS018

3. Install transmission.
   - See Transmission section in this manual.

CAUTION: When assembling the engine and transmission, confirm that dowels have been mounted in the specified positions at the engine side.

NOTE: Take care that dowel positions are different between the manual transmission and the automatic transmission.

Otherwise, the transmission may be damaged.

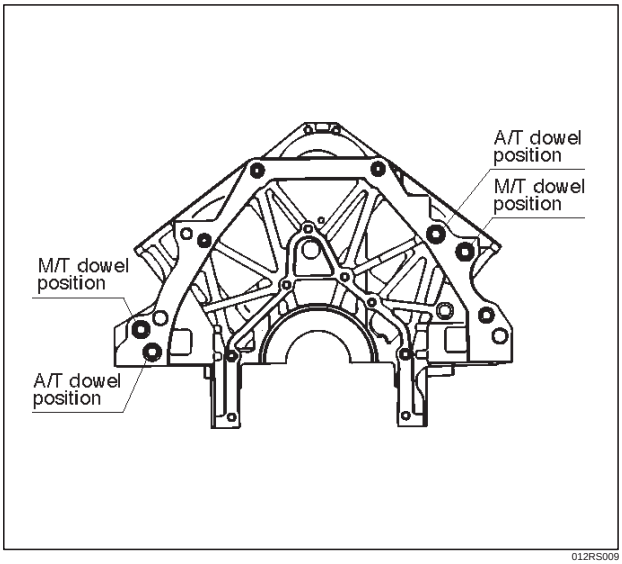

012RS009

Downloaded from www.Manualslib.com manuals search engine

Engine Assembly

Removal

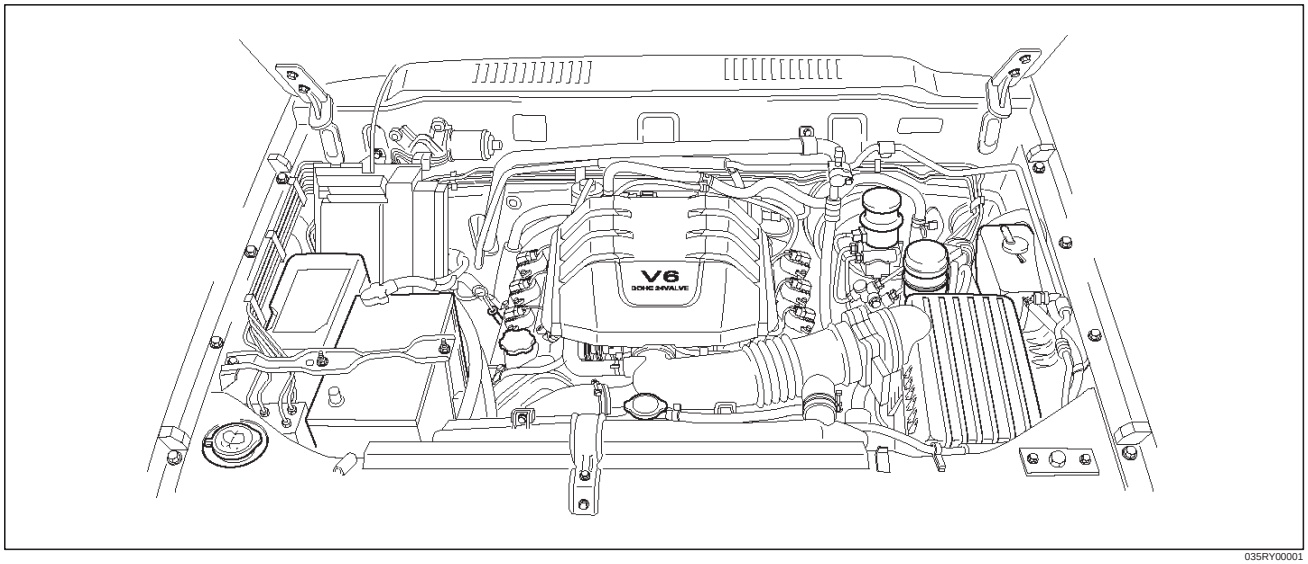

035RY00001

1. Disconnect battery ground and positive cable.
2. Remove battery.
3. Make alignment mark on the engine hood and hinges before removal in order to return the hood to original position exactly.
4. Remove engine hood.
5. Drain radiator coolant.
6. Disconnect ion sensing module harness connectors, and manifold absolute pressure sensor harness connectors from sensors on common chamber.
7. Disconnect throttle position sensor harness connectors from throttle body.
8. Disconnect air duct with air cleaner cover.
9. Remove air cleaner assembly.
10. Disconnect canister vacuum hose.
11. Disconnect vacuum booster hose.
12. Disconnect three engine harness connectors.
13. Disconnect harness connector to transmission (left front side of engine compartment), disconnect shift on the fly harness connector from front side of front axle and remove transmission harness bracket from engine left side.
14. Disconnect ground cable between engine and frame.
15. Disconnect bonding cable connector on the back of right dash panel.
16. Disconnect bonding cable terminal on the left bank.
17. Disconnect starter harness connector from starter.
18. Disconnect generator harness connector from generator.
19. Disconnect coolant reserve tank hose from radiator.
20. Remove radiator upper and lower hoses.
21. Remove upper fan shroud.
22. Remove cooling fan assembly four fixing nuts, then the cooling fan assembly.
23. Move drive belt tensioner to loose side using wrench then remove drive belt.
24. Remove power steering pump fixing bolts, then power steering pump. Place the power steering pump along with piping on the body side.
25. Remove air conditioning compressor fixing bolts from bracket and place the compressor along with piping on the body side.
26. Remove four O_2 sensor harness connectors (two each bank) from exhaust front pipe.
27. Remove three exhaust pipe fixing nuts from each bank.
28. Remove two exhaust pipe fixing nuts from each exhaust pipe, then move exhaust pipe to rear side of vehicle.
29. Remove flywheel dust covers.
30. Disconnect two heater hoses from engine.
31. Disconnect fuel hoses from right side of transmission.

CAUTION: Plug fuel pipes on engine side and fuel hoses from fuel tank.

32. Remove transmission assembly. Refer to Transmission section in this manual.
33. Support the engine by engine hoist.
34. Remove two left side engine mount fixing bolts from engine mount on chassis side.
35. Remove two right side engine mount fixing bolts from engine mount on chassis side.
36. Remove engine assembly.

Downloaded from www.Manualslib.com manuals search engine

Installation

CAUTION: When assembling the engine and transmission, confirm that dowels have been mounted in the specified positions at the engine side.

NOTE: Take care that dowel positions are different between the manual transmission and the automatic transmission.

If the engine is assembled in the condition that the dowels have not been mounted in the specified positions, the transmission may be damaged the transmission.

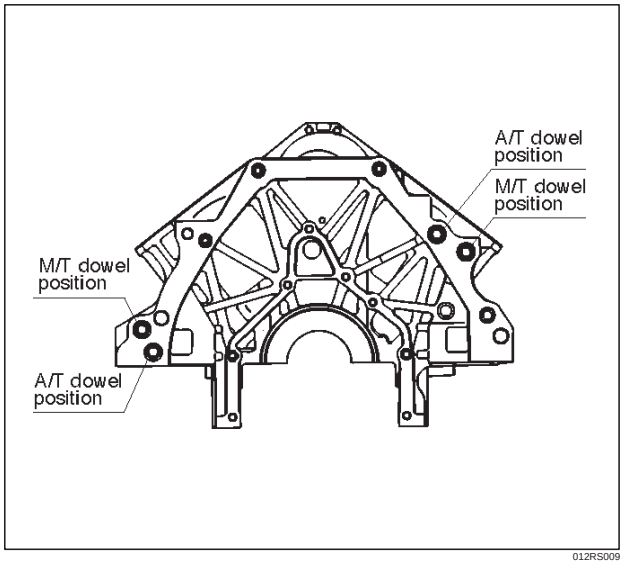

012RS009

1. Install engine assembly. Tighten engine mount fixing bolts to frame to the specified torque.

   Torque: 41 N·m (30 lb ft)

2. Reconnect fuel hose to fuel pipe on engine.
3. Install transmission assembly. Refer to Transmission section in this manual.
4. Reconnect two heater hoses to engine.
5. Install flywheel dust covers.
6. Install exhaust pipe and temporally tighten two (each bank) rear exhaust flange nuts then tighten three stud nuts (each bank) between exhaust manifold and exhaust pipe, finally tighten rear side nuts to the specified torque.

   Torque:

   Nuts: 43 N·m (32 lb ft)

   Stud nuts: 67 N·m (49 lb ft)

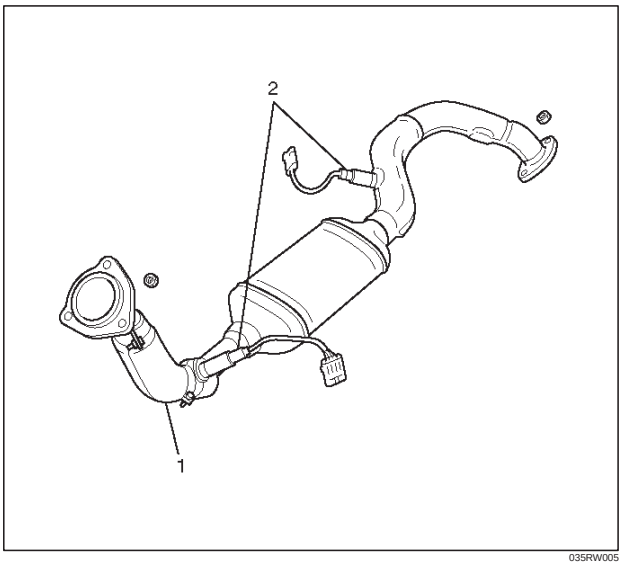

035RW005

Legend

(1) Exhaust Front Pipe RH
(2) O_2 Sensor

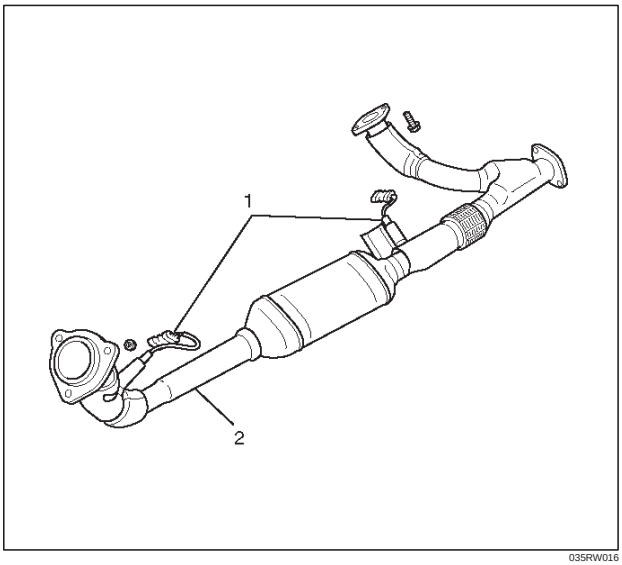

035RW016

Legend

(1) O_2 Sensor
(2) Exhaust Front Pipe LH

7. Reconnect O_2 sensor connector.
8. Install cooling fan assembly and tighten bolts/nuts to the specified torque.

   Torque : 22 N·m (16 lb ft) for fan pulley and fan bracket.

   Torque : 10 N·m (88.5 lb in) for fan and clutch assembly.

9. Install air conditioner compressor to engine and tighten to the specified torque.

   6VE1

   Torque :

Downloaded from www.Manualslib.com manuals search engine

M8 bolts : 22 N·m (16 lb ft)

M10 bolts : 43 N·m (32 lb ft)

10. Install power steering pump, tighten fixing bolt to the specified torque.

Torque :

M8 bolts : 22N·m (16 lb ft)

M10 bolts : 46 N·m (34 lb ft)

11. Move drive belt tensioner to loose side using wrench, then install drive belt to normal position.

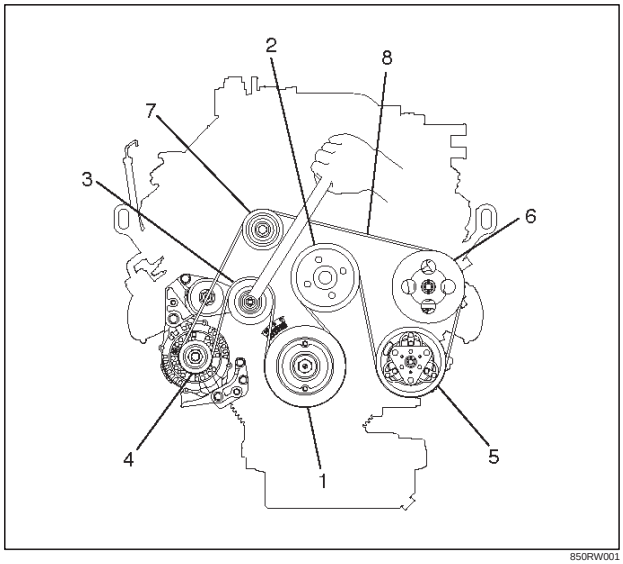

850RW001

Legend

(1) Crankshaft Pulley
(2) Cooling Fan Pulley
(3) Tensioner
(4) Generator
(5) Air Conditioner Compressor
(6) Power Steering Oil Pump
(7) Idle Pulley
(8) Drive Belt

12. Install upper fan shroud.
13. Reconnect radiator upper and lower hoses.
14. Reconnect coolant reserve tank hose to radiator.
15. Reconnect generator harness connector.
16. Reconnect starter harness connector.
17. Reconnect bonding cable terminal on left bank
18. Reconnect bonding cable terminal on the back of right dash panel.
19. Reconnect ground cable between engine and chassis.
20. Reconnect harness connector to transmission and install transmission harness bracket on engine left side.
21. Reconnect three engine harness connectors.
22. Reconnect vacuum booster hose.
23. Reconnect canister vacuum hose.
24. Install air cleaner assembly.
25. Reconnect air duct.
26. Reconnect throttle position sensor harness connector.

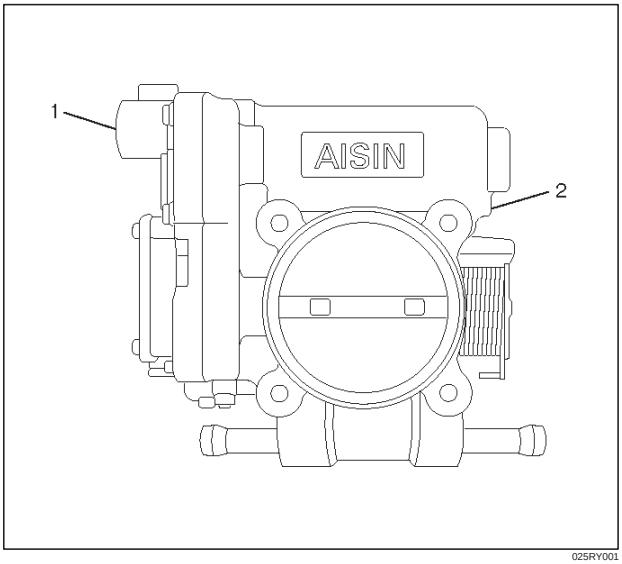

025RY001

Legend

(1) Throttle Position Sensor Connector
(2) Throttle Valve Assembly

27. Reconnect manifold absolute pressure sensor harness connectors.
28. Reconnect ion sensing module connectors as shown in the illustration.

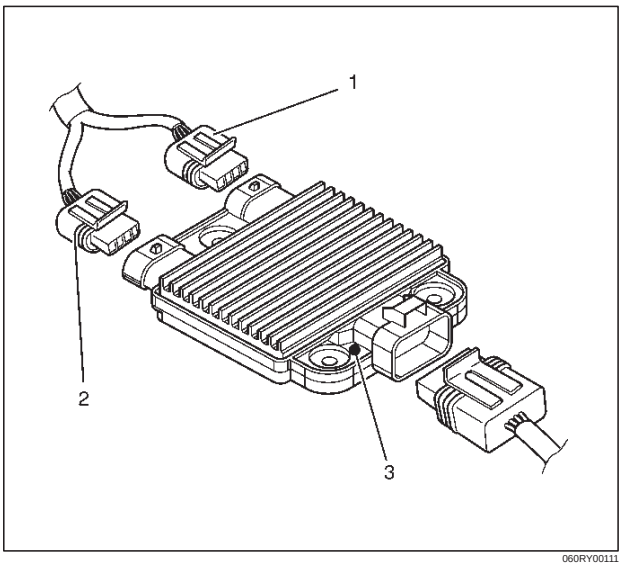

060RY00111

Legend

(1) Green Connector
(2) Blue Connector
(3) Identification Mark (6VE1 Engine Only)

29. Install engine hood to the original position.
    - Refer to installation procedure for Body section in this manual.

Downloaded from www.Manualslib.com manuals search engine

Cylinder Head

Cylinder Head and Associated Parts

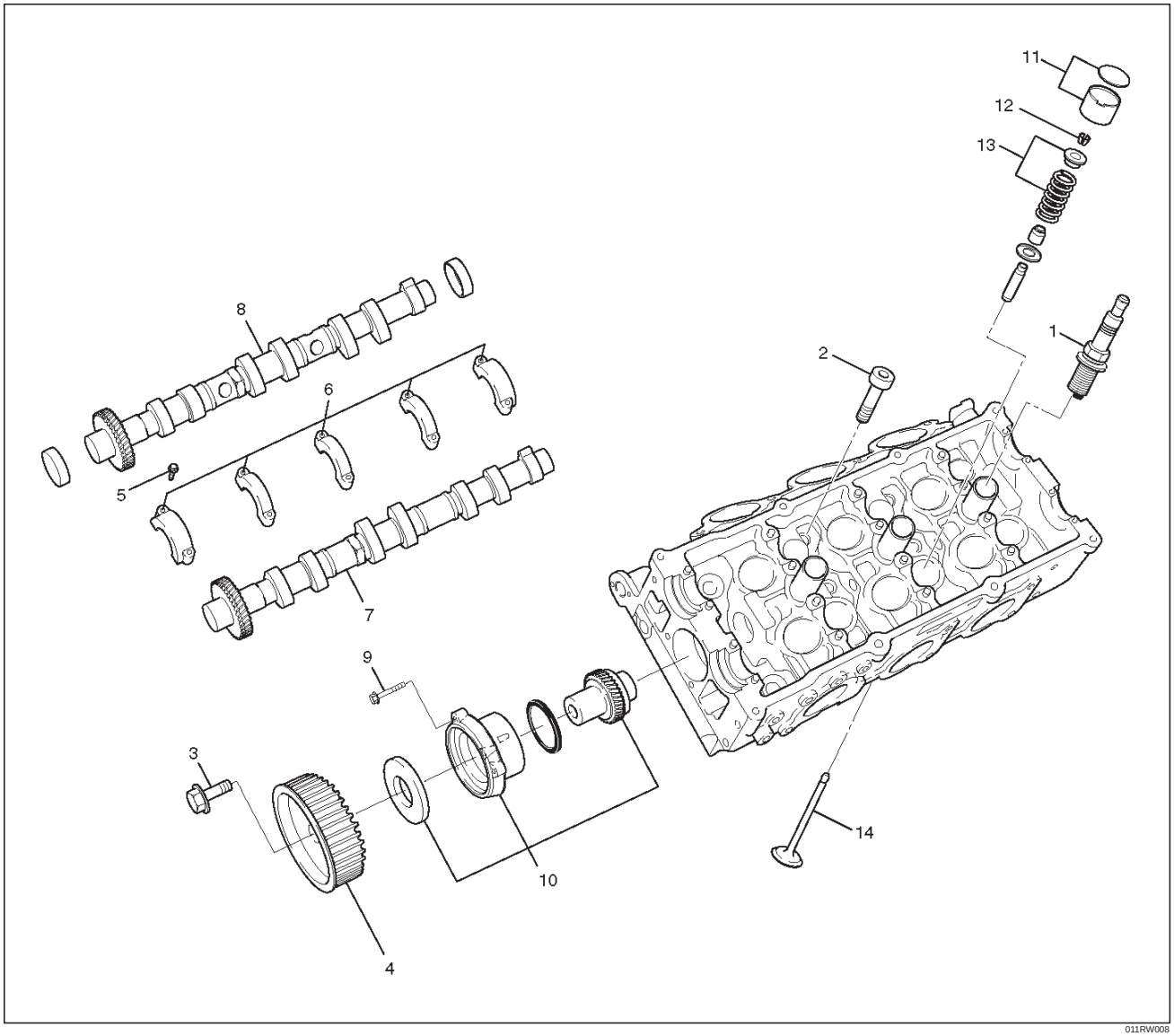

011RW008

Legend

(1) Spark Plug
(2) Cylinder Head Bolt
(3) Camshaft Drive Gear Pulley Fixing Bolt
(4) Camshaft Drive Gear Pulley
(5) Camshaft Bearing Cap Fixing Bolt
(6) Camshaft Bearing Cap
(7) Camshaft Exhaust
(8) Camshaft Intake
(9) Retainer Fixing Bolt
(10) Retainer Assembly
(11) Tappet with Shim
(12) Split Collar
(13) Valve Spring and Spring Upper Seat
(14) Valve

Downloaded from www.Manualslib.com manuals search engine

Disassembly

NOTE:

- During disassembly, be sure that the valve train components are kept together and identified so that they can be reinstalled in their original locations.
- Before removing the cylinder head from the engine and before disassembling the valve mechanism, perform a compression test and note the results.

1. Remove camshaft drive gear pulley fixing bolt (3), then pulley (4).
2. Remove camshaft bearing cap fixing bolt (5), camshaft bearing cap (6), then camshaft exhaust (7), and intake side (8).
3. Remove tappet with shim (11).
4. Use the J–8062 valve spring compressor and J–42898 valve spring compressor adapter to remove the split collar (12), valve spring with upper seat (13) and valve (14).

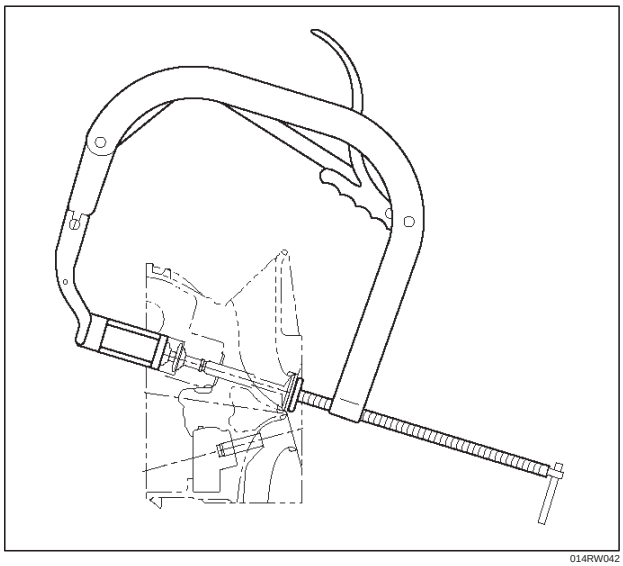

014RW042

5. Remove spark plug (1).

CAUTION: Do not remove the spark plugs when the head and plugs are hot. Clean dirt and debris from spark plug recess areas before removal.

Clean

Cylinder head

Carefully remove all varnish, soot and carbon from the bare metal. Do not use a motorized wire brush on any gasket sealing surface.

Inspection and Repair

1. Cylinder head gasket and mating surfaces for leaks, corrosion and blow–by. If the gasket has failed, determine the cause.
   - Insufficient torque on head bolts.
   - Improper installation
   - Loose or warped cylinder head
   - Missing dowel pins
   - Warped case surface
2. Cylinder head for cracks, especially between valve seats and in the exhaust ports.
3. Cylinder head deck for corrosion, sand particles in head and porosity.

CAUTION:

- **Do not attempt to weld the cylinder head. Replace it.**
- **Do not reuse cylinder head bolts.**

4. Cylinder head deck, common chamber and exhaust manifold mating surfaces for flatness. These surfaces may be reconditioned by milling. If the surfaces are “out of flat” by more than specification, the surface should be ground to within specifications. Replace the head if it requires machining beyond the repairable limit.

   Head surface and manifold surface

   Standard: 0.05 mm (0.002 in) or less

   Warpage limit: 0.2 mm (0.0079 in)

   Maximum Repairable limit: 0.2 mm (0.0079 in)

   Head height

   Standard height : 133.2 mm (5.2441 in)

   Warpage limit : 0.2 mm (0.0079 in)

   Maximum Repairable limit : 133.0 mm (5.2362 in)

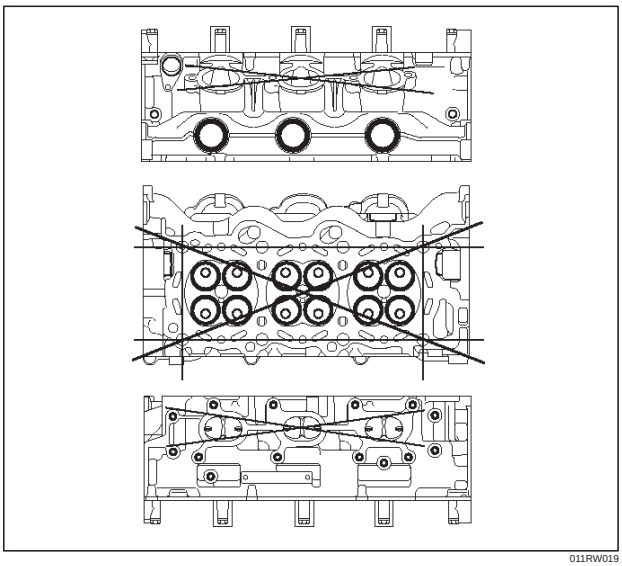

011RW019

5. Water jacket sealing plugs seating surfaces.

Downloaded from www.Manualslib.com manuals search engine

Reassembly

1. Install Spark plug and tighten all the spark plugs to specified torque.

   Torque: 18 N·m (13 lb ft)

2. Tighten sub gear setting bolt.
   1. Use J–(42686 gear spring lever) to turn sub gear to right direction until the M5 bolt aligns with the hole between camshaft driven gear and sub gear.
   2. Tighten the M5 bolt to a suitable torque to prevent the sub gear from moving .

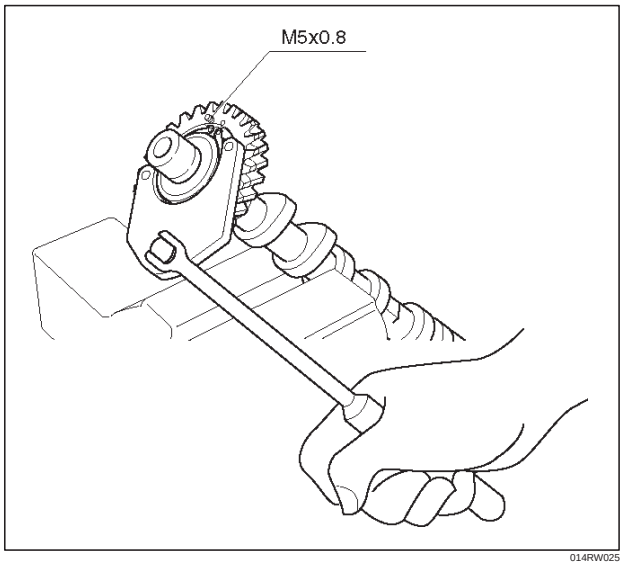

014RW025

3. Install camshaft drive gear assembly and tighten three bolts to the specified torque.

   Torque: 10 N·m (7.4 lb ft)

4. Install camshaft assembly and camshaft bearing cap, tighten twenty bolts on one side bank to the specified torque.
   1. Apply engine oil to camshaft journal and bearing surface of camshaft bearing cap.
   2. Align timing mark on intake camshaft (one dot for right bank, two dots for left bank) and exhaust camshaft (one dot for right bank, two dots for left bank) to timing mark on camshaft drive gear (one dot).

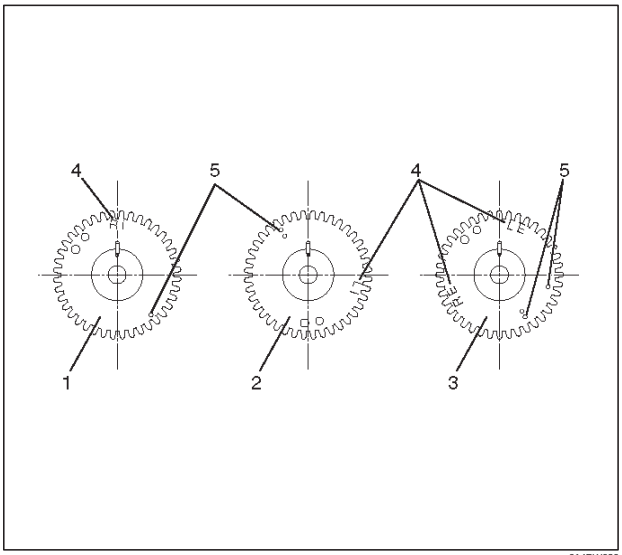

014RW020

Legend

(1) Intake Camshaft Timing Gear for Right Bank
(2) Intake Camshaft Timing Gear for Left Bank
(3) Exhaust Camshaft Timing Gear
(4) Discrimination Mark
LI: Left Bank Intake
RI: Right Bank Intake
LE: Left Bank Exhaust
RE: Right Bank Exhaust

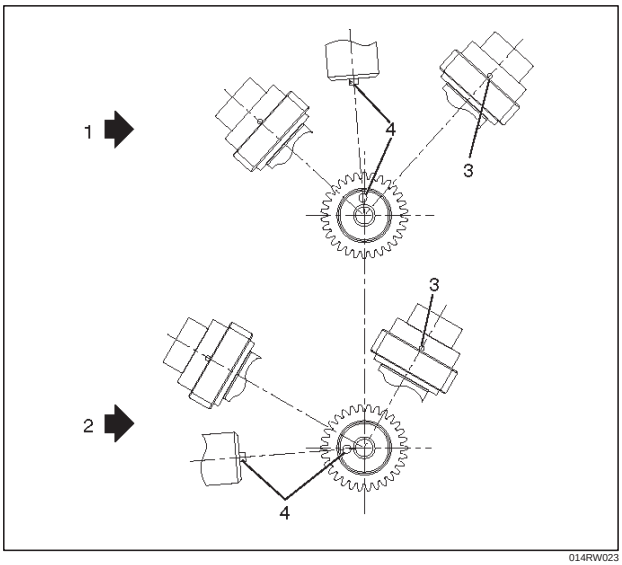

014RW023

Legend

(1) Right Bank Camshaft Drive Gear
(2) Left Bank Camshaft Drive Gear
(3) Timing Mark on Drive Gear
(4) Dowel Pin

Downloaded from www.Manualslib.com manuals search engine

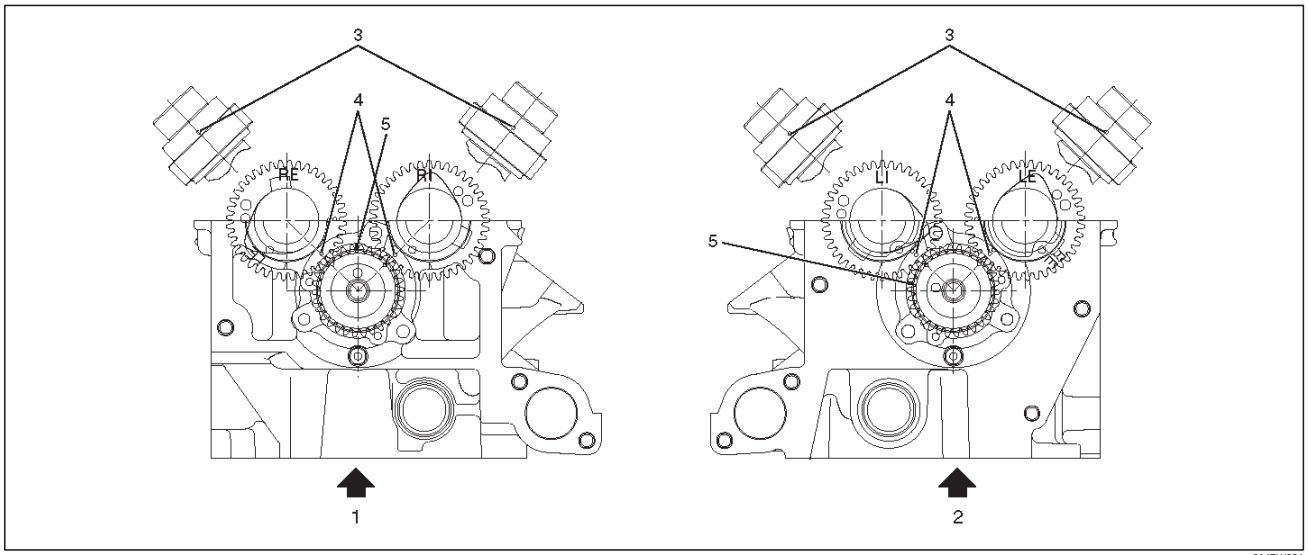

014RW024

Legend

(1) Right Bank
(2) Left Bank
(3) Alignment Mark on Camshaft Drive Gear
(4) Alignment Mark on Camshaft
(5) Alignment Mark on Retainer

3. Tighten twenty bolts in numerical order on one side bank as shown in the illustration.

Torque: 10 N·m (89 lb in)

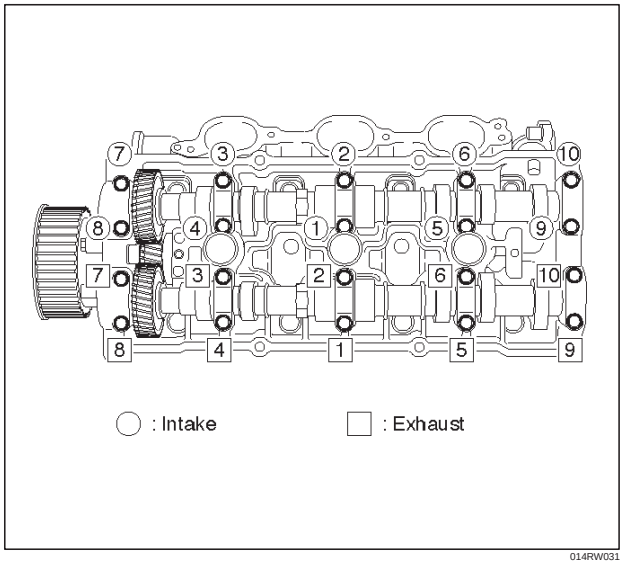

014RW031

5. Tighten bolt for camshaft drive gear assembly pulley to the specified torque.

Torque: 98 N·m (72 lb ft)

Downloaded from www.Manualslib.com manuals search engine

Valve Spring, Oil Controller, Valve, Valve Guide

Valve Spring, Oil Controller, Valve, Valve Guide and Associated Parts

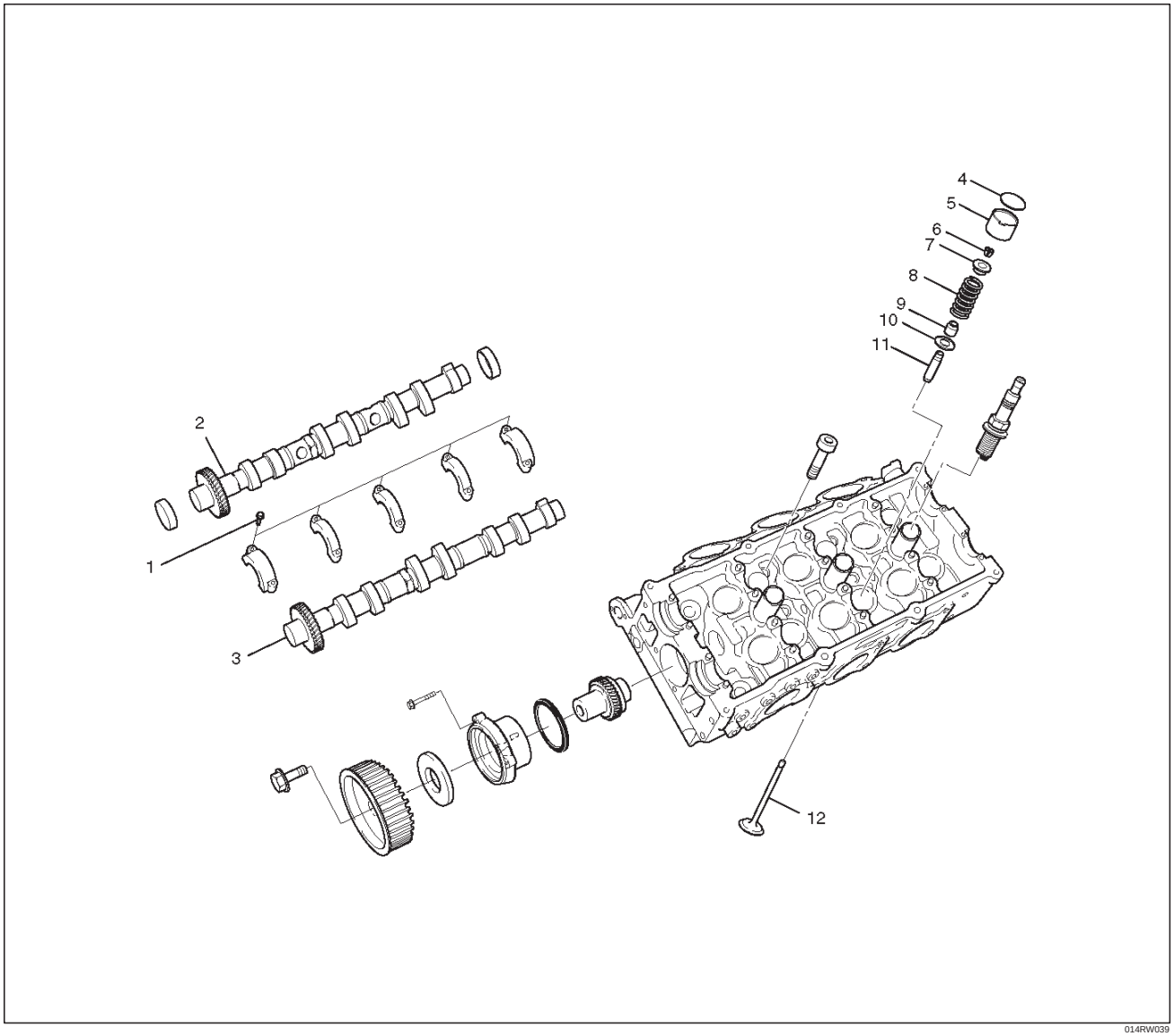

014RW039

Legend

(1) Camshaft Bearing Cap Fixing Bolts
(2) Camshaft Assembly Inlet
(3) Camshaft Assembly Exhaust
(4) Shim
(5) Tappet
(6) Split Collar
(7) Spring Upper Seat
(8) Valve Spring
(9) Oil Controller
(10) Spring Lower Seat
(11) Valve Guide
(12) Valve

Disassembly

1. Remove camshaft bearing cap fixing bolts (1).
2. Remove camshaft assembly (intake).
3. Remove camshaft assembly (Exhaust side).
4. Remove shim (4) and tappet (5).

Downloaded from www.Manualslib.com manuals search engine

5. Use J–8062 valve spring compressor and J–42898 valve spring compressor adapter to remove split collar.

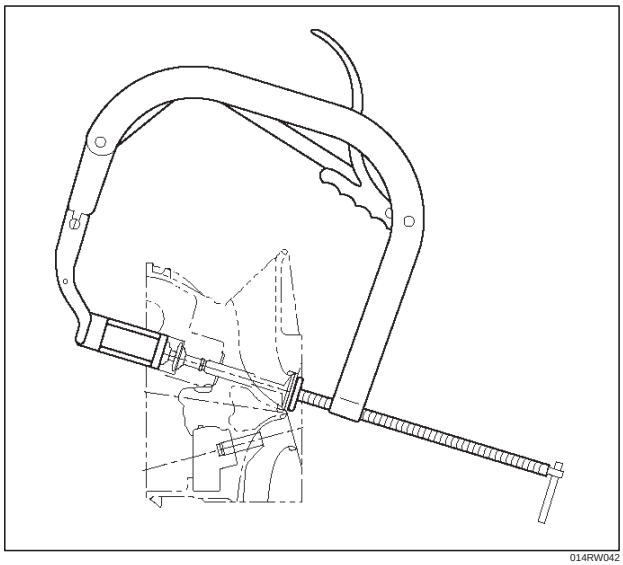

014RW042

6. Remove valve spring.
7. Remove valve.
8. Remove oil controller and spring lower seat.
9. Remove the valve guide using the J–42899 valve guide replacer.

Inspection and Repair

Valve Spring

CAUTION: Visually inspect the valve springs and replace them if damage or abnormal wear is evident.

1. Measure the free height of the springs. The springs must be replaced if the free height is below the specified limit.

   Standard : 44.6 mm (1.7559 in)

   Limit : 43.6 mm (1.7165 in)

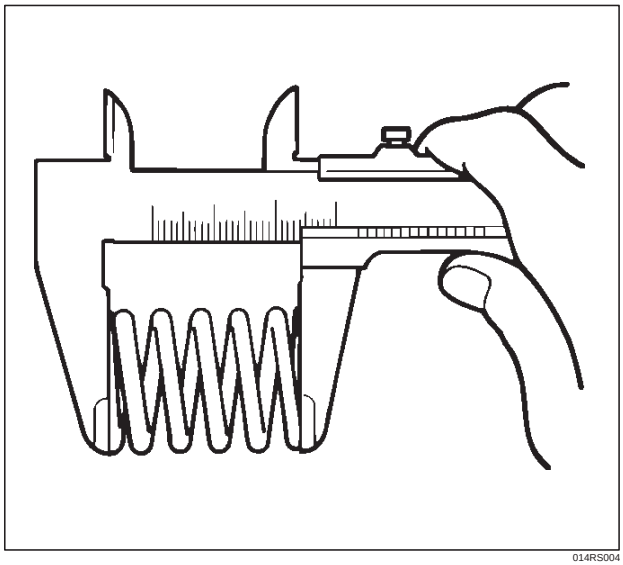

014RS004

2. Measure the valve spring squareness with a steel square and replace the valve springs if the measured value exceeds the specified limit.

   Limit : 2 mm (0.0787 in)

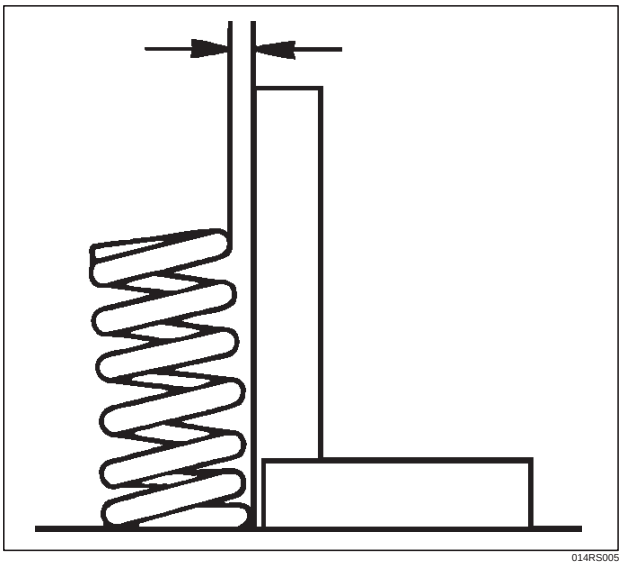

014RS005

3. Using a spring tester to compress the springs to the installed height, measure the compressed spring tension, and replace the springs if the measured tension is below the specified limit.

   At installed height: 35.0 mm (1.38 in)

   Standard: 196 N (44 lb)

   Limit: Less than 181 N (41 lb)

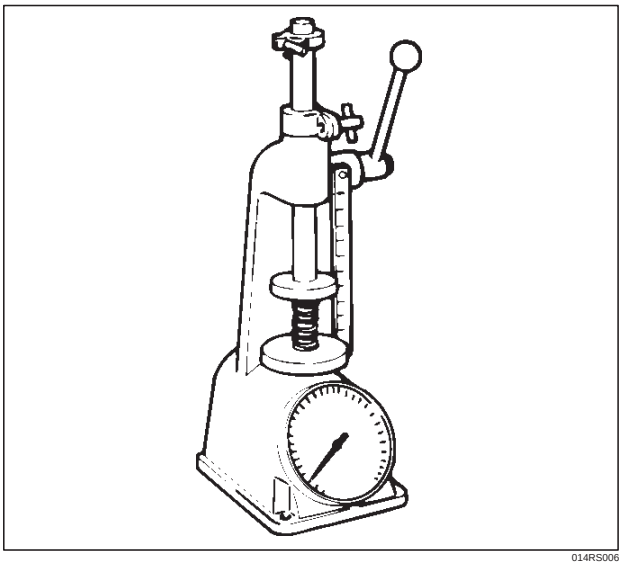

014RS006

Valve Guide

CAUTION: Take care not to damage the valve seat contact surface, when removing carbon adhering to the valve head. Carefully inspect the valve stem for scratchs or abnormal wear. If these conditions are present, the valve and the valve guide must be replaced as a set.

Downloaded from www.Manualslib.com manuals search engine

1. Measure the valve stem diameter with a micrometer. If the valve stem diameter is less than the specified limit, the valve and the valve guide must be replaced as a set.

Diameter of Valve Stem

Intake

Standard : 5.977 mm–5.959 mm (0.2353 in–0.2346 in)

Limit : 5.90 mm (0.2323 in)

Exhaust

Standard : 5.952 mm–5.970 mm (0.2343 in–0.2350 in)

Limit : 5.90 mm (0.2323 in)

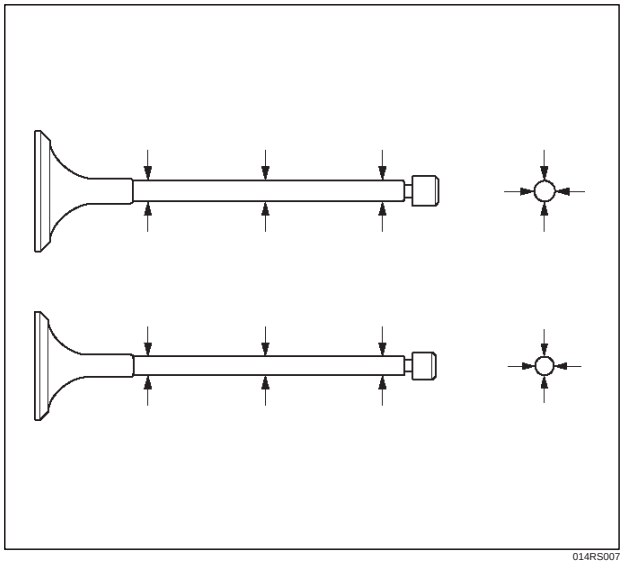

014RS007

2. Measure the inside diameter of the valve guide with a micrometer. Subtract the measured outer diameter of the valve stem from the measured inner diameter of the valve guide. If the value exceeds the specified limit, the valve and the valve guide must be replaced as a set.

Inside Diameter of the Vale Guide

Inlet clearance

Standard : 0.023 mm–0.056 mm (0.0009 in–0.0002 in)

Limit : 0.20 mm (0.00787 in)

Exhaust clearance

Standard : 0.030 mm–0.063 mm (0.0012 in–0.0025 in)

Limit : 0.20 mm (0.00787 in)

Valve Guide Replacement

1. Using Valve guide replacer: J–42899, drive out the valve guide from the combustion chamber side.

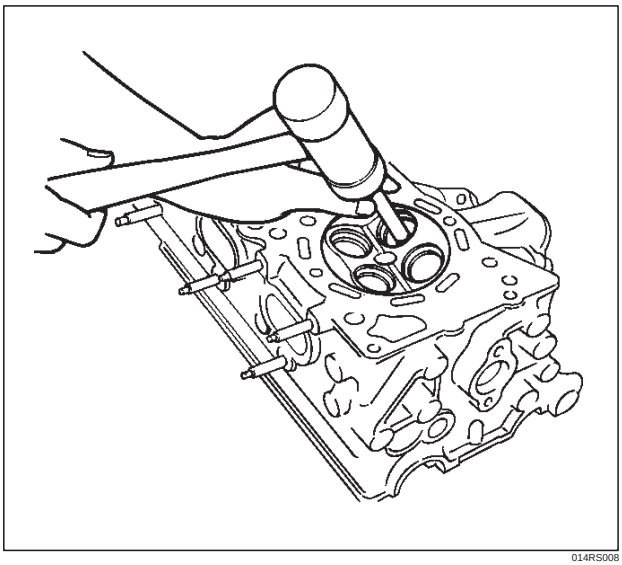

014RS008

2. Apply engine oil to the outside of the valve guide. Using valve guide replacer J–42899, drive in a new valve guide from the camshaft side, and check the valve guide height.

Valve guide upper end height: 13.0 mm (0.5118 in)

(Measured from the cylinder head upper face)

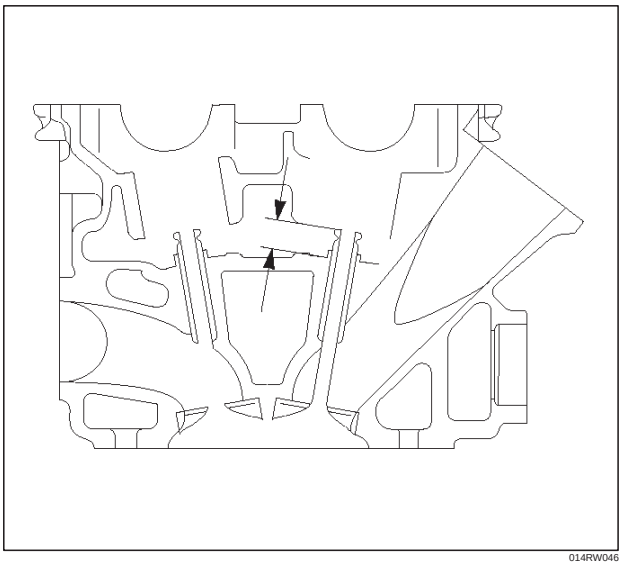

014RW046

3. Check the clearance. If the clearance is less than the specified value, ream the inside diameter of valve guide. Using a sharp 6 mm reamer, ream the valve guide to obtain the specified clearance.

Valve Seat

1. Measure the protrusion of the valve stem when a new valve is installed in the cylinder head. If the protrusion of the valve stem exceeds the limit, replace the valve seat insert or the cylinder head assembly.

Protrusion of valve stem

Intake

Standard: 39.32 mm (1.5480 in)

Downloaded from www.Manualslib.com manuals search engine

Limit: 39.47 mm (1.5539 in)

Exhaust

Standard: 39.30 mm (1.5472 in)

Limit: 39.45 mm (1.5531 in)

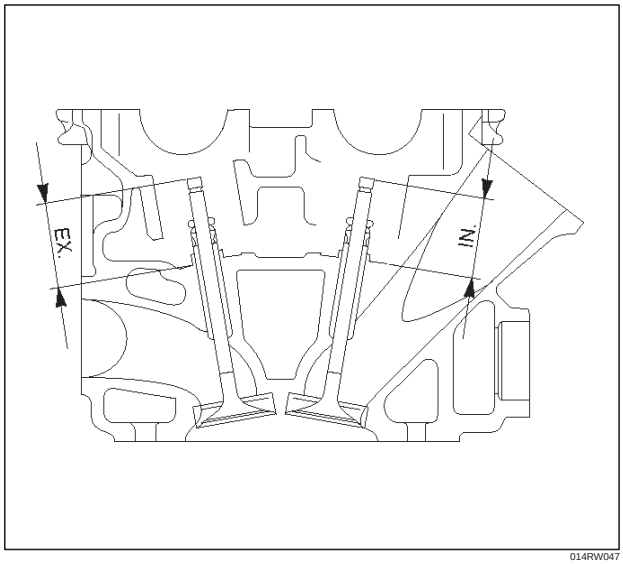

014RW047

2. Measure the valve seat contact width. Make the necessary corrections if the seat contact surface is damaged or rough or if the contact width wear exceeds the limit.

Valve seat contact width

Standard: 1.1 mm (0.0433 in)

Limit: 1.7 mm (0.0669 in)

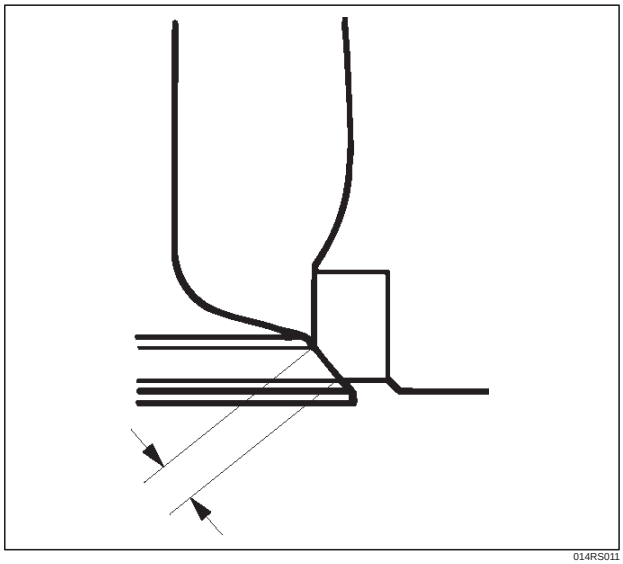

014RS011

Contact Surface Angle on Valve Seat on Valve

1. Measure contact surface angle on valve seat.
2. If the measured value exceeds the limit, replace valve, valve guide and valve seat as a set.

Valve contact surface angle: 45˚

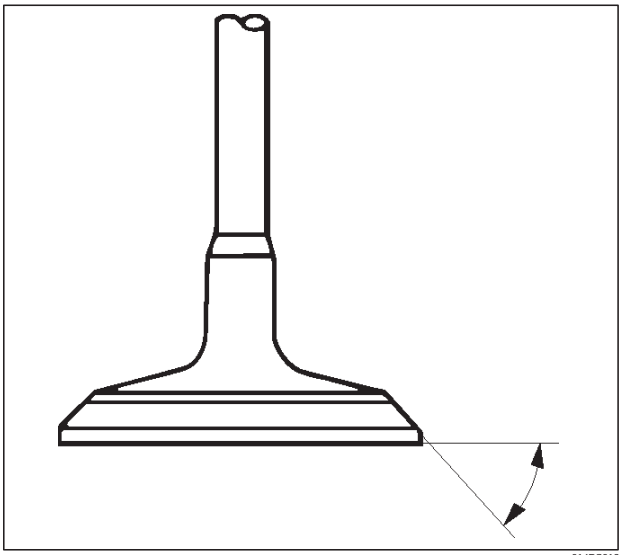

014RS012

Valve Seat Insert Correction

1. Remove the carbon from the valve seat insert surface.
2. Use a valve cutter to minimize scratches and other rough areas. This will bring the contact width back to the standard value. Remove only the scratches and rough areas. Do not cut away too much. Take care not to cut away unblemished areas of the valve seat surface.

Valve seat angle degree: 90˚

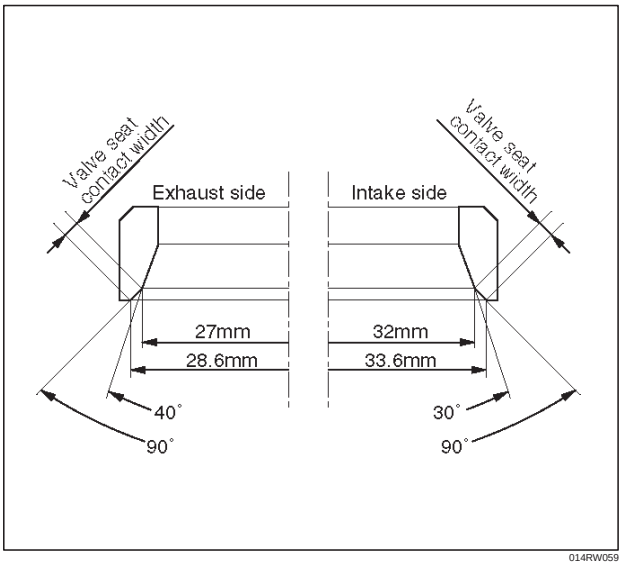

014RW059

3. Apply abrasive compound to the valve seat insert surface.
4. Insert the valve into the valve guide.
5. Turn the valve while lapping it to fit the valve seat insert.
6. Check that the valve contact width is correct.

Downloaded from www.Manualslib.com manuals search engine

7. Check that the valve seat insert surface is in contact with the entire circumference of the valve.

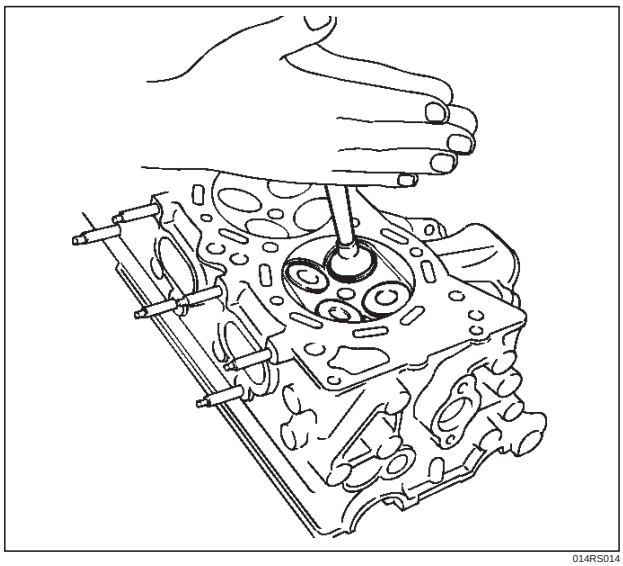

014RS014

Valve Seat Insert Replacement

1. Arc weld the rod at several points. Be careful not to damage the aluminum section.
2. Allow the rod to cool for a few minutes. This will cause the valve seat to shrink.
3. Strike the rod and pull it out.

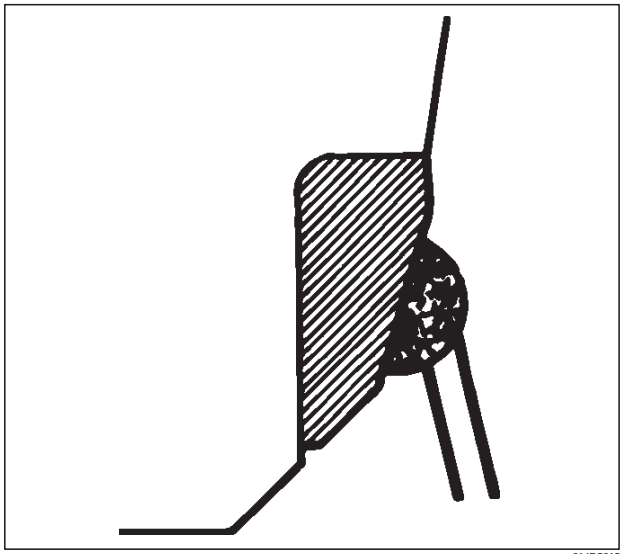

014RS015

4. Carefully clean the valve seat press–fit section on the cylinder head side.
5. Heat the press–fit section with steam or some other means to cause expansion. Cool the valve seat with dry ice or some other means.
6. Insert the press–fit section into the valve seat horizontally.

   Standard fitting interference: 0.14 mm–0.09 mm (0.0055 in–0.0035 in)

7. After insertion, use a seat grinder to grind finish the seating face. Carefully note the seating angle, the contact width, and the depression.
8. Lap the valve and the seat.

Reassembly

1. Install valve guide (1) to cylinder head. Apply engine oil to the outside of the valve guide. Using valve guide replacer J–42899, drive in a new valve guide from the camshaft side.
2. Install oil controller (3) and spring lower seat (2). Using oil controller replacer J–37281, drive in a new oil controller.

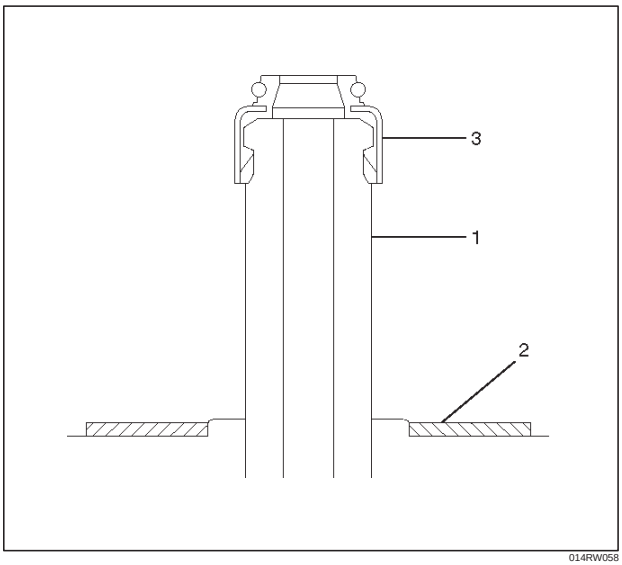

014RW058

3. Install valve to valve guide. Before install valve guide apply engine oil to the outside of the valve stem.
4. Install valve spring to cylinder head. Attach the valve spring to the lower spring seat. The painted area of the valve spring should be facing downward.

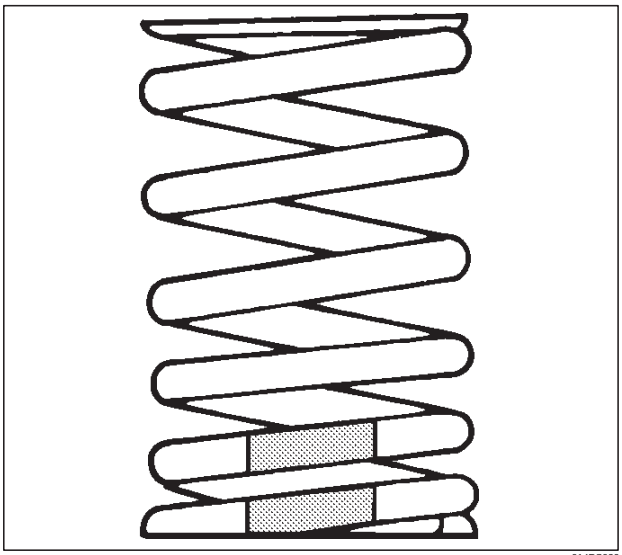

014RS020

Downloaded from www.Manualslib.com manuals search engine

5. Install lower valve spring seat, valve spring and upper valve spring seat then put split collars on the upper spring seat, using the J–8062 valve spring compressor and J–42898 valve spring compressor adapter to install the split collars.

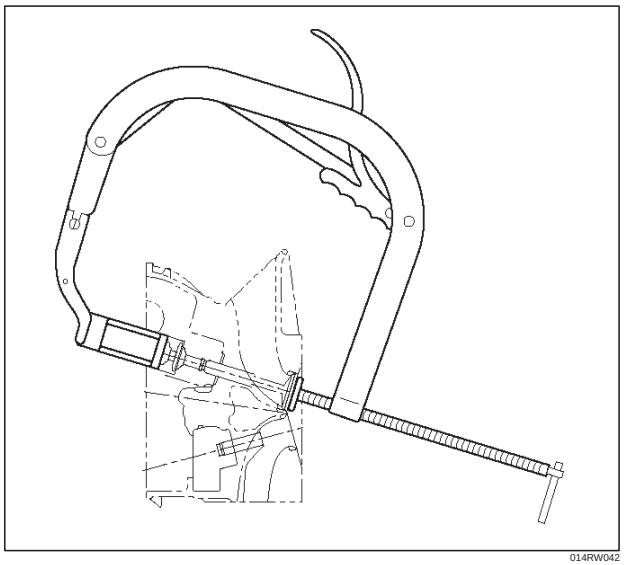

014RW042

6. Install tappet with shim.
7. Install camshaft assembly.
   - Refer to installation procedure for Camshaft in this manual.

Valve Clearance Adjustments

NOTE: To adjust valve clearance, apply engine oil to the cam as well as to the adjusting shim (2) with the cylinder head built on the cylinder block, give a few turns to the camshaft by means of timing pulley tightening bolt, and measure valve clearance when the nose of cam is just opposite to maximum cam lift (1) as shown in illistration below.

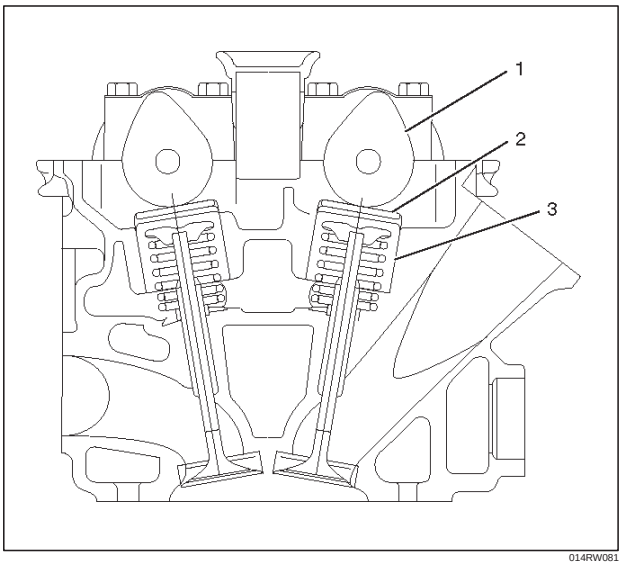

014RW081

Legend

(1) Cam
(2) Shim
(3) Tappet

Valve Clearance Standard Value (cold)

Intake: 0.23 mm–0.33 mm (0.0091 in–0.0130 in)

Exhaust: 0.25 mm–0.35 mm (0.0098 in–0.0138 in)

Selection of Adjusting Shim

Shim to be selected = (Thickness of removed shim) + (Valve clearance measurement – Standard valve)
Based on the above formula, the best suited shim should be selected from 41 sorts of shim (differently thick at 0.02mm (0.0008 in) intervals from 2.40mm (0.0945 in) through 3.2mm (0.1260 in) thick). Install the shim and check valve clearance.

Downloaded from www.Manualslib.com manuals search engine

Replacement of Shim

Let the cam push down the edge of tappet by using J–42689 valve clearance adjusting tool and push out the shim with a flat blade screw driver as shown in illustrations below.

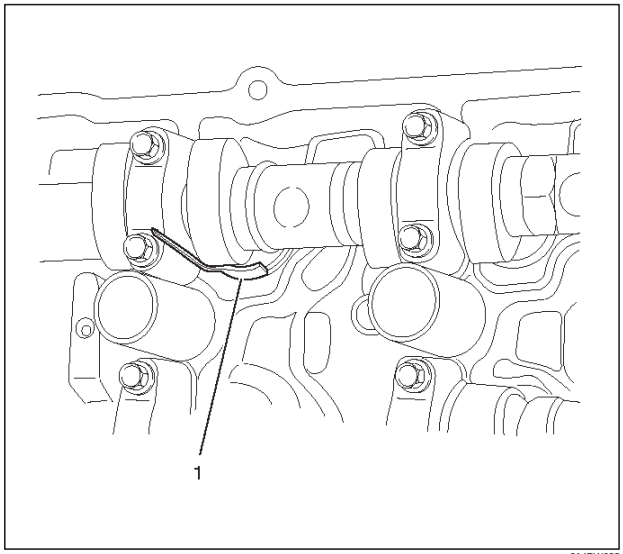

014RW082

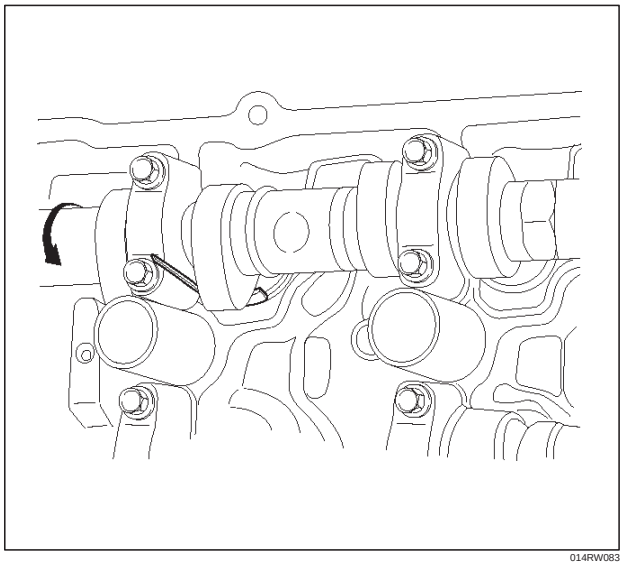

014RW083

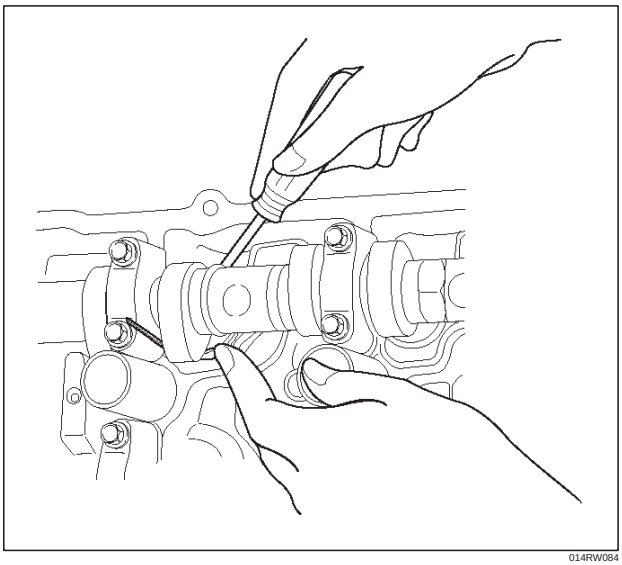

014RW084

Downloaded from www.Manualslib.com manuals search engine

Camshaft

Camshaft and Associated Parts

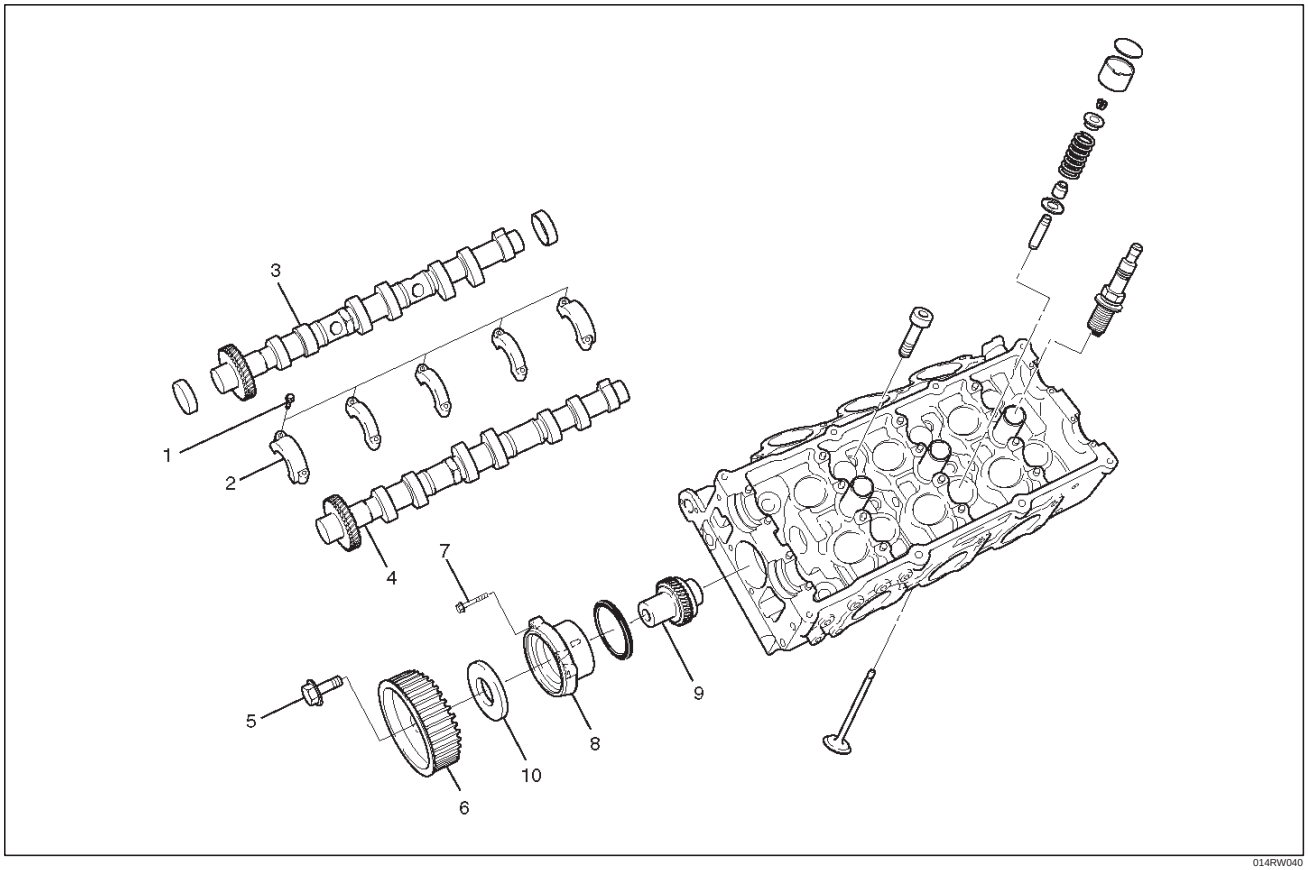

014RW040

Legend

(1) Camshaft Bearing Cap Fixing Bolt
(2) Camshaft Bearing Cap
(3) Camshaft Assembly Intake
(4) Camshaft Assembly Exhaust
(5) Pulley Fixing Bolt
(6) Camshaft Drive Gear Pulley
(7) Retainer Fixing Bolt
(8) Retainer
(9) Camshaft Drive Gear
(10) Oil Seal

Disassembly

1. Remove fixing bolt (5) for camshaft drive gear pulley using the J–43041 universal holder.

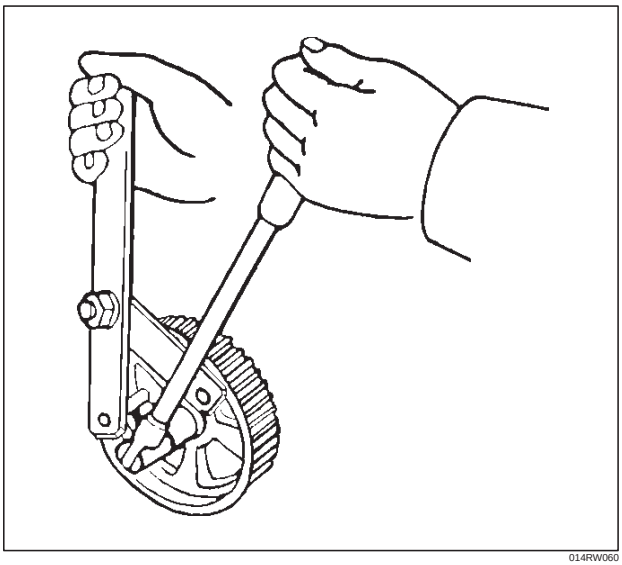

014RW060

Downloaded from www.Manualslib.com manuals search engine

2. Remove twenty fixing bolts from inlet and exhaust camshaft bearing cap on one side bank, then camshaft bearing cap (2).

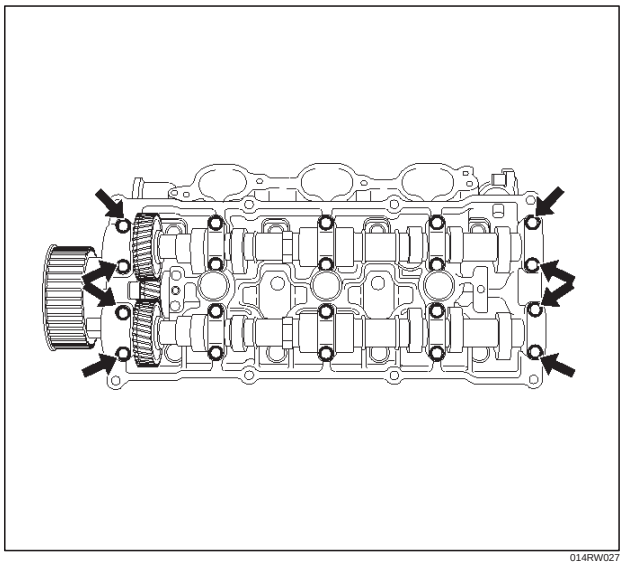

014RW027

3. Remove camshaft assembly (3), (4).
4. Remove three fixing bolts (7) from camshaft drive gear retainer (8), then camshaft drive gear assembly.

Inspection and Repair

1. Use a micrometer to measure the cam lobe height and uneven wear. Replace the camshaft if either the lobe height or the uneven wear exceeds the specified limit.

Lobe height : 44.709 mm (1.7602 in)

Uneven wear : 0.05 mm (0.0020 in)

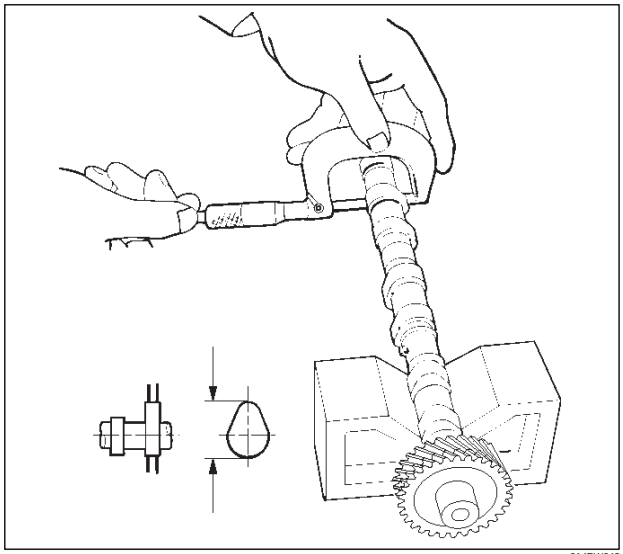

014RW043

2. Use a micrometer to measure the diameter and the uneven wear of the camshaft journals.
   Replace the camshaft if the diameter or the uneven wear exceeds the specified limit.

Journal Diameter

Standard : 25.972 mm–25.993 mm (1.0225 in–1.0233 in)

Limit : 25.8 mm (1.0157 in)

Uneven wear : 0.05 mm (0.0020 in)

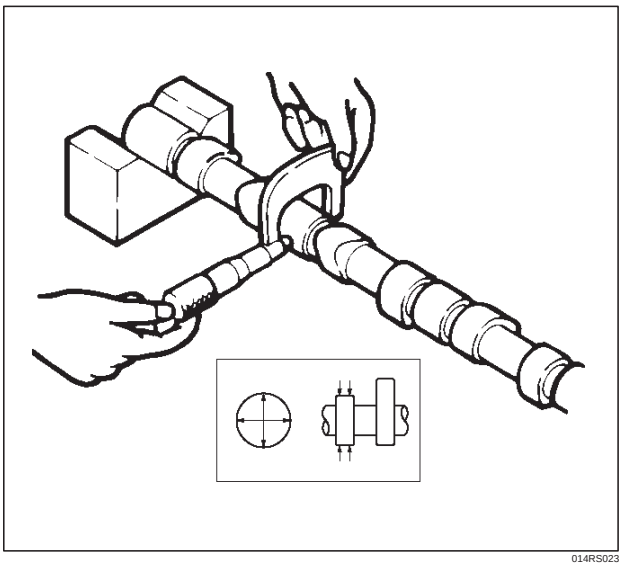

014RS023

3. Place the camshaft on V–blocks.
   Slowly rotate the camshaft and measure the runout with a dial indicator.
   Replace the camshaft if the runout exceeds the specified limit.

Runout

Limit : 0.1 mm (0.0039 in)

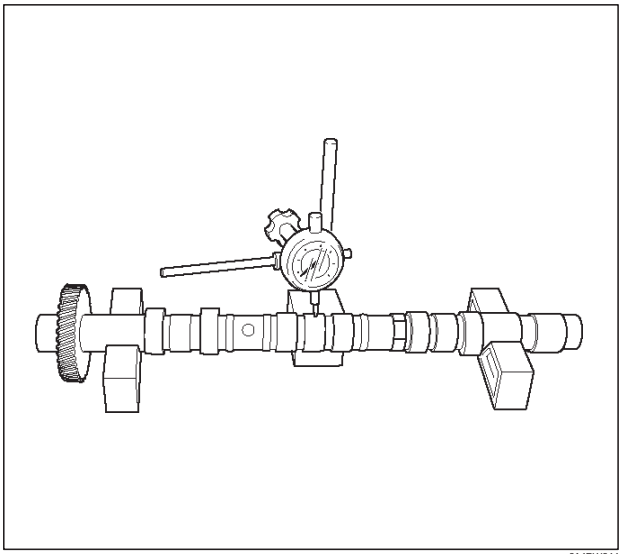

014RW044

Downloaded from www.Manualslib.com manuals search engine

4. Measure the camshaft journal oil clearance.
   1. Measure the camshaft bearing cap housing inside diameter.

NOTE: Tighten camshaft bearing cap (2) to specified torque before measuring the camshaft bearing cap inside diameter.

Torque : 10 N·m (89 lb in)

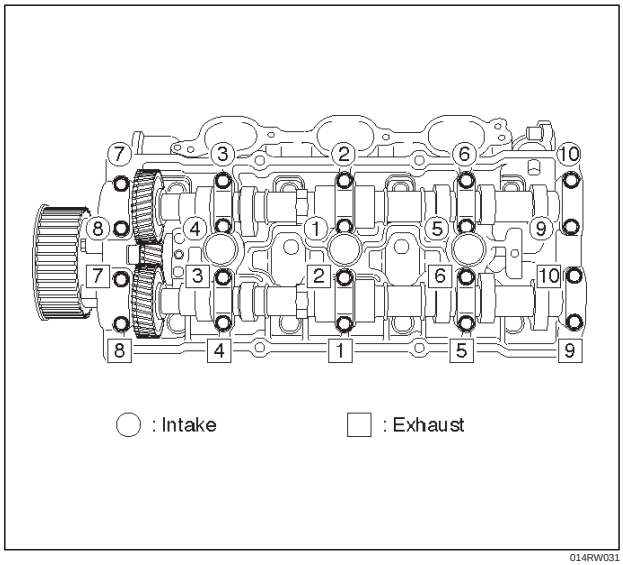

014RW031

   2. Subtract the camshaft outside diameter from the camshaft bearing cap housing inside diameter.

Oil Clearance

Standard : 0.027 mm–0.078 mm (0.0011 in–0.0031 in)

Limit : 0.11 mm (0.0043 in)

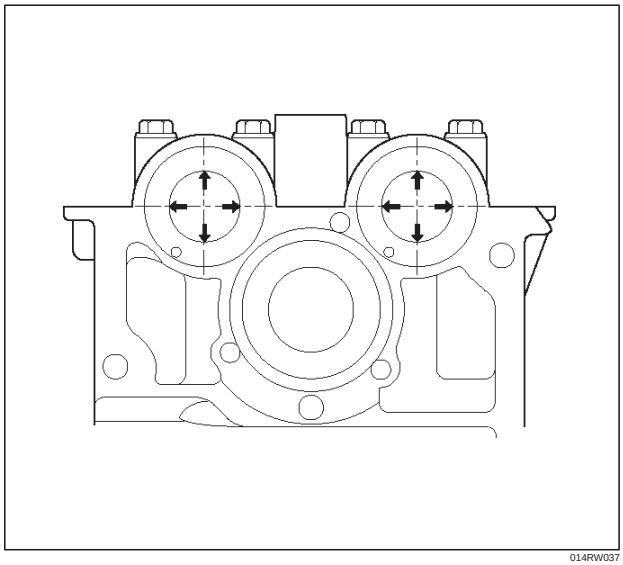

014RW037

5. Replace the cylinder head and/or camshaft if the measured oil clearance exceeds the specified limit.
   1. Carefully clean the camshaft journal, the camshaft bracket, and the cylinder head.
   2. Install camshaft assembly and camshaft bearing cap (2), tighten twenty bolts (1) on one side bank to the specified torque.

Torque: 10 N·m (89 lb in)

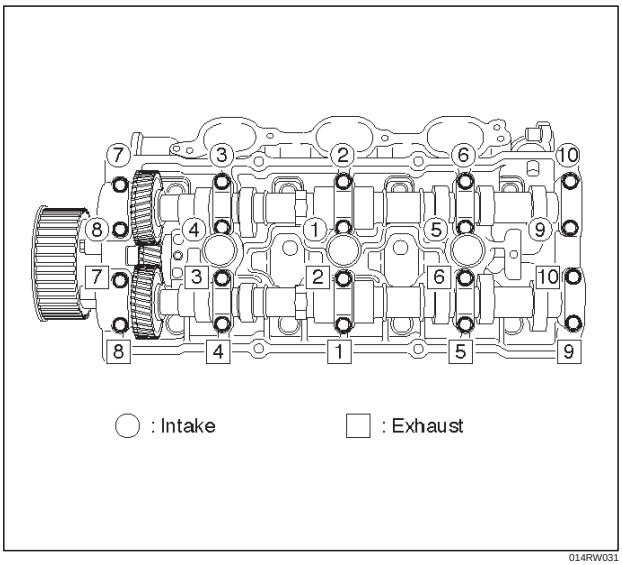

014RW031

   3. Measure the camshaft thrust clearance with a dial indicator. Replace the camshaft and/or the cylinder head if the camshaft thrust clearance exceeds the specified limit.

Camshaft thrust Clearance

Standard : 0.03 mm–0.08 mm (0.0012 in.–0.0031 in.)

Limit : 0.12 mm (0.0047 mm)

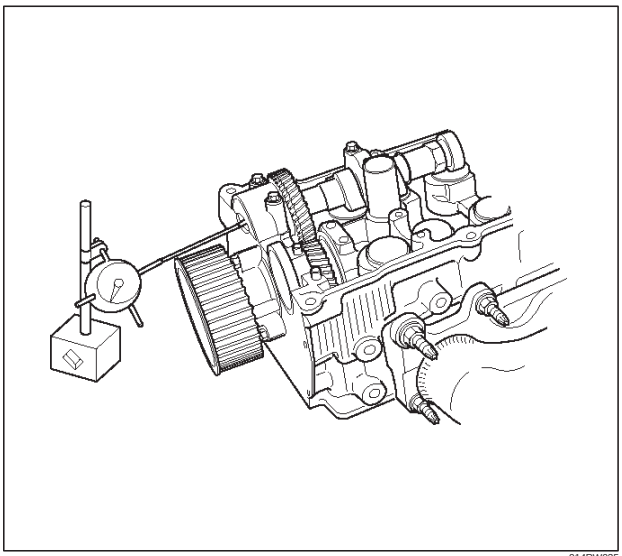

014RW035

Downloaded from www.Manualslib.com manuals search engine

Reassembly

1. Install camshaft drive gear assembly and tighten three bolts to specified torque.

   Torque: 10 N·m (89 lb in)

2. Tighten sub gear setting bolt.
   1. Use J–42686 to turn sub gear to right direction until the M5 bolt hole aligns between camshaft driven gear and sub gear.
   2. Tighten M5 bolt suitable torque for prevent moving the sub gear.

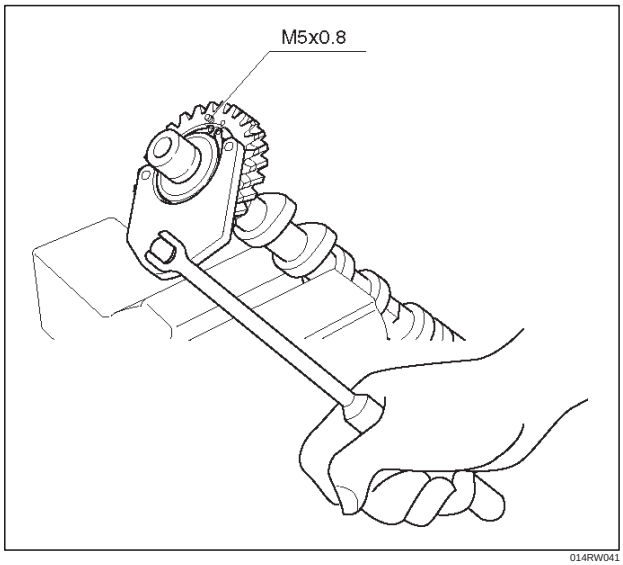

014RW041

3. Install camshaft assembly and camshaft bearing caps, tighten twenty bolts on one side bank to the specified torque.
   1. Apply engine oil to camshaft journal and bearing surface of camshaft bearing cap.
   2. Align timing mark on intake camshaft (one dot for right bank, two dots for left bank) and exhaust camshaft (one dot for right bank, two dots for left bank) to timing mark on camshaft drive gear (one dot).

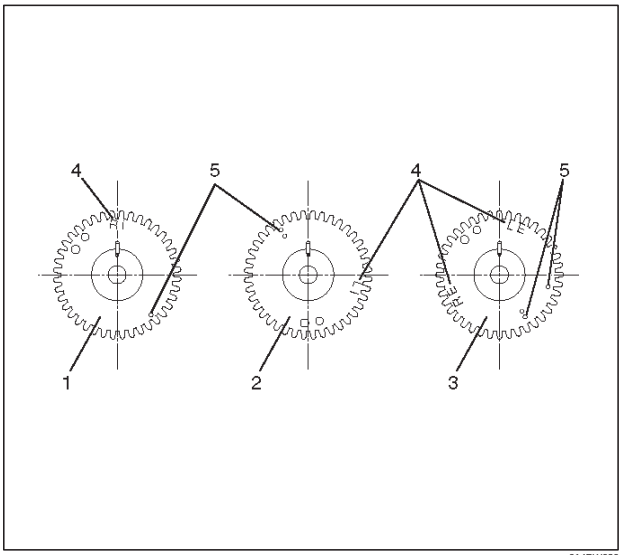

014RW020

Legend

(1) Intake Camshaft Timing Gear for Right Bank
(2) Intake Camshaft Timing Gear for Left Bank
(3) Exhaust Camshaft Timing Gear
(4) Discerning Mark
LI: Left Bank Intake
RI: Right Bank Intake
LE: Left Bank Exhaust
RE: Right Bank Exhaust

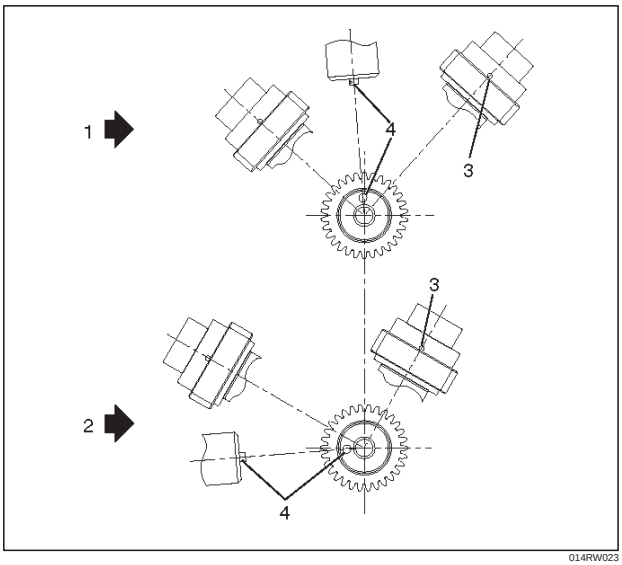

014RW023

Legend

(1) Right Bank Camshaft Drive Gear
(2) Left Bank Camshaft Drive Gear
(3) Timing Mark on Drive Gear
(4) Dowel Pin

Downloaded from www.Manualslib.com manuals search engine

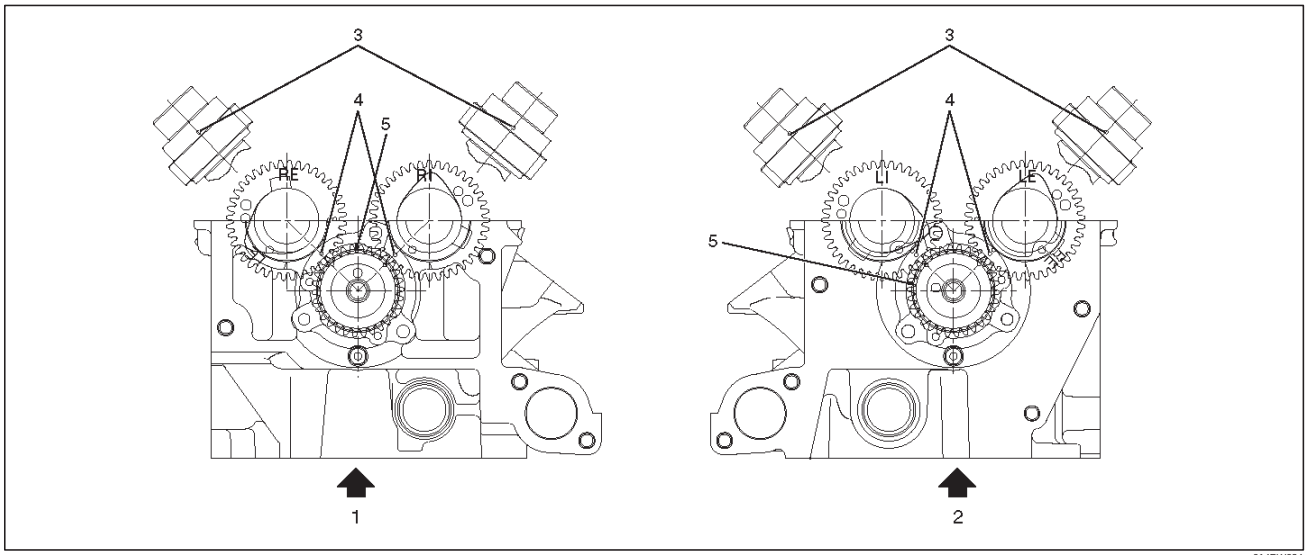

014RW024

Legend

(1) Right Bank
(2) Left Bank
(3) Alignment Mark on Camshaft Drive Gear
(4) Alignment Mark on Camshaft
(5) Alignment Mark on Retainer

3. Tighten twenty bolts in numerical order on one side bank as shown in the illustration.

Torque: 10 N·m (89 lb in)

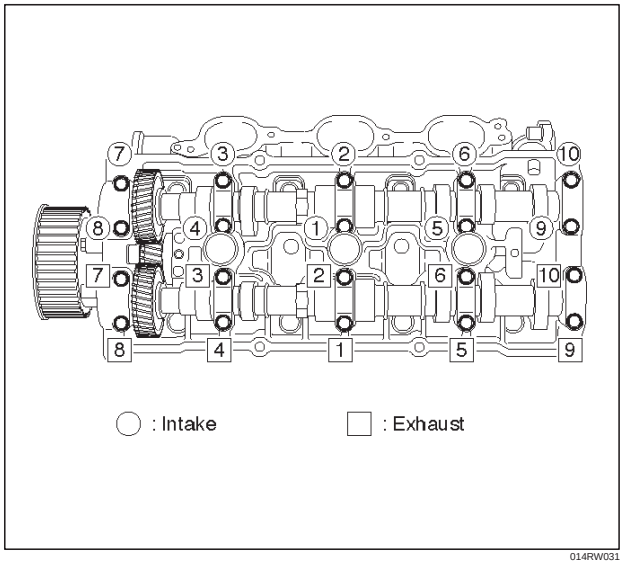

014RW031

4. If the oil seal requires replacement, use the J–42985 to install the oil seal.

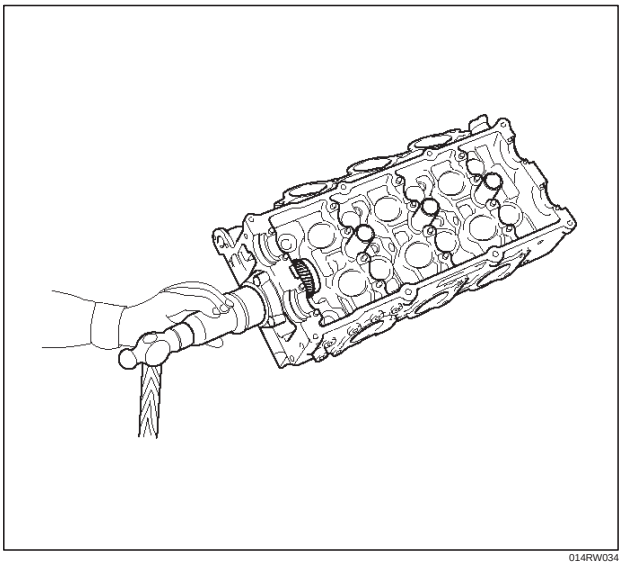

014RW034

Downloaded from www.Manualslib.com manuals search engine

5. Tighten bolt for camshaft drive gear pulley to the specified torque using the J–43041 universal holder.

Torque: 98 N·m (72 lb ft)

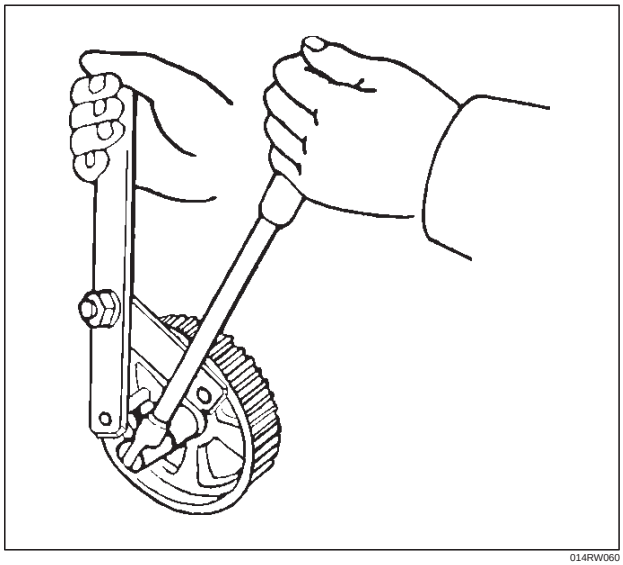

014RW060

Downloaded from www.Manualslib.com manuals search engine

Crankshaft

Crankshaft and Associated Parts

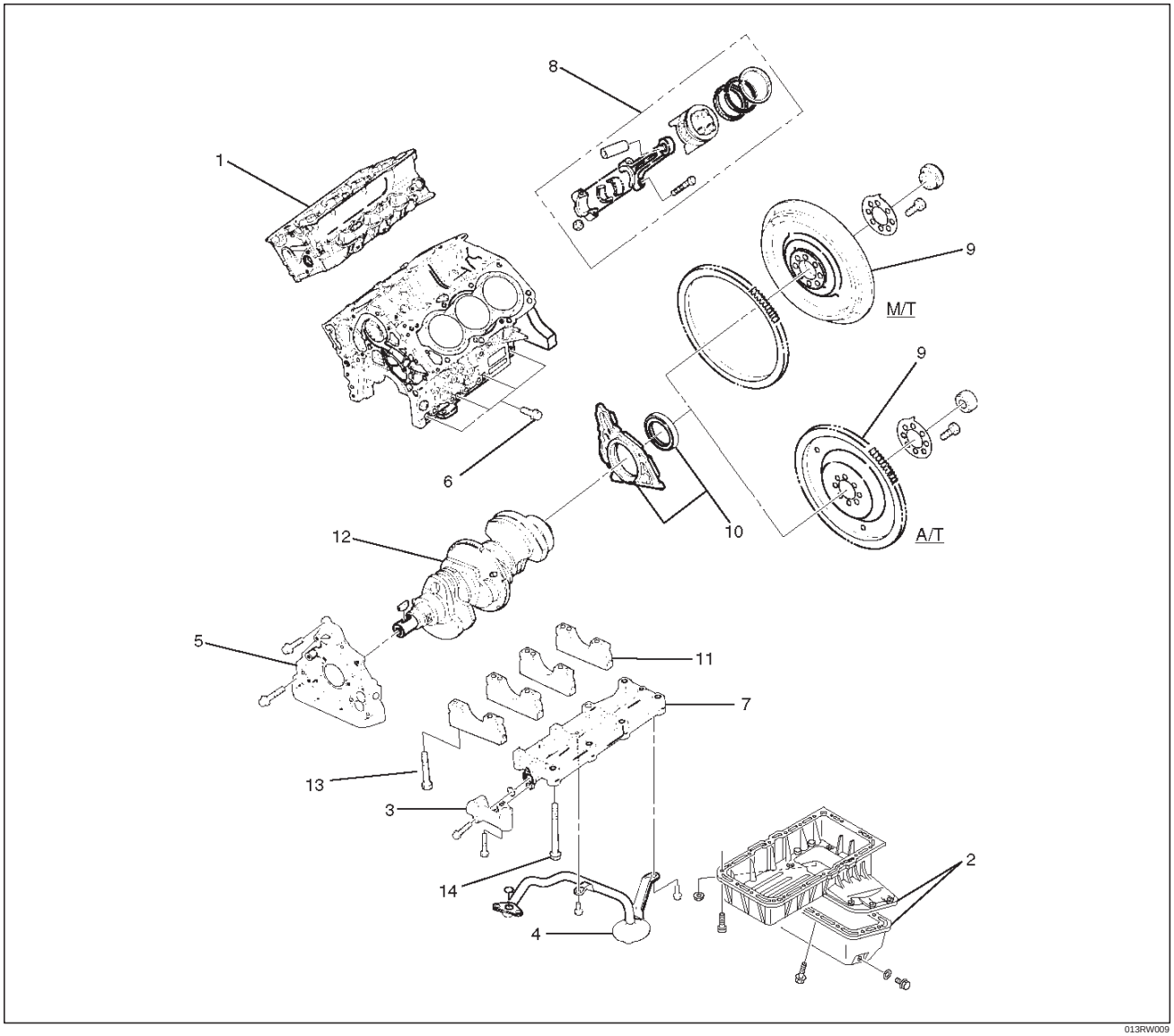

Legend

(1) Cylinder Head Assembly
(2) Crankcase with Oil Pan
(3) Oil Pipe and O-Ring
(4) Oil Strainer and O-Ring
(5) Oil Pump Assembly
(6) Cylinder Block Side Bolts
(7) Oil Gallery
(8) Piston and Connecting Rod Assembly
(9) Flywheel
(10) Rear Oil Seal Retainer and Oil Seal
(11) Main Bearing Cap
(12) Crankshaft
(13) Main Bearing Cap Fixing Bolts
(14) Oil Gallery Fixing Bolts

Downloaded from www.Manualslib.com manuals search engine

Disassembly

1. Remove cylinder head assembly (1). Refer to “Cylinder Head” in this manual.
2. Remove crankcase with oil pan (2). Refer to “Oil Pan and Crankcase” in this manual.

CAUTION: Take care not to damage or deform the sealing flange surface of crankcase.

3. Remove oil pipe and O-ring (3).
4. Remove oil strainer and O-ring (4).
5. Remove oil pump assembly (5).
6. Remove crankcase side bolts (6).
7. Remove oil gallery (7).
8. Remove piston and connecting rod assembly (8). Refer to “Piston, Piston Ring and Connecting Rod” in this manual.
9. Remove flywheel (9).
10. Remove rear oil seal retainer (10).
11. Remove main bearing cap (11).
12. Remove crankshaft (12).

Inspection and Repair

1. Crankshaft
   Set the dial indicator as shown in the illustration and measure the crankshaft thrust clearance. If the thrust clearance exceeds the specified limit, replace the thrust bearings as a set.

   Thrust Clearance
   Standard : 0.06 mm–0.24 mm (0.0024 in–0.0094 in)
   Limit : 0.30 mm (0.0118 in)

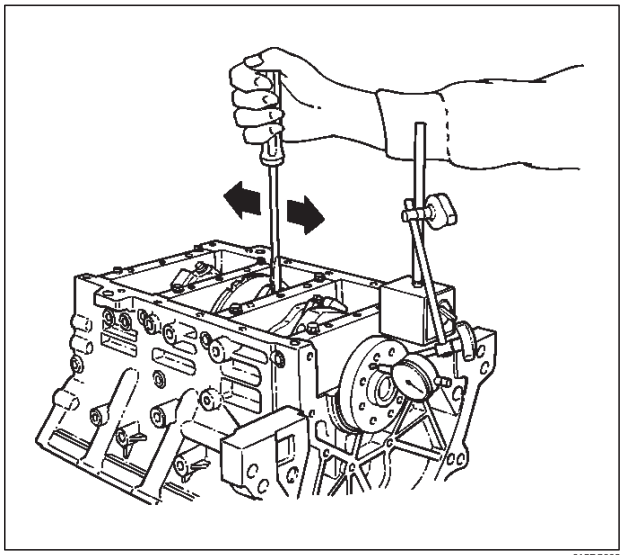

015RS003

Main Bearing Clearance

1. Remove the bearing caps and measure the oil clearance.
2. Remove the main bearing cap fixing bolts in the sequence shown in the illustration.
   Arrange the removed main bearing caps in the cylinder number order.
   Remove the main bearings.

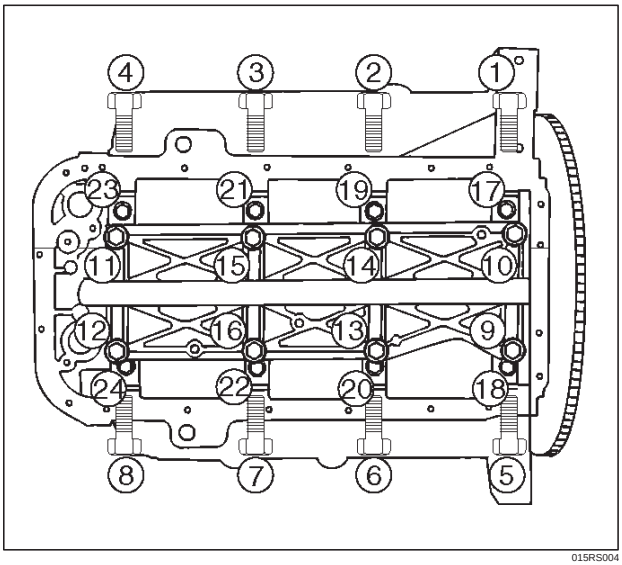

015RS004

3. Remove the crankshaft.
   Remove the main bearings.
4. Clean the upper and lower bearings as well as the crankshaft main journal.
5. Check the bearings for damage or excessive wear.
   The bearings must be replaced as a set if damage or excessive wear is discovered during inspection.
6. Set the upper bearings and the thrust washers to their original positions.
   Carefully install the crankshaft.
7. Set the lower bearings to the bearing cap original position.
8. Apply plastigage to the crankshaft journal unit as shown in the illustration.

NOTE: Do not set the plastigage on the oil hole.

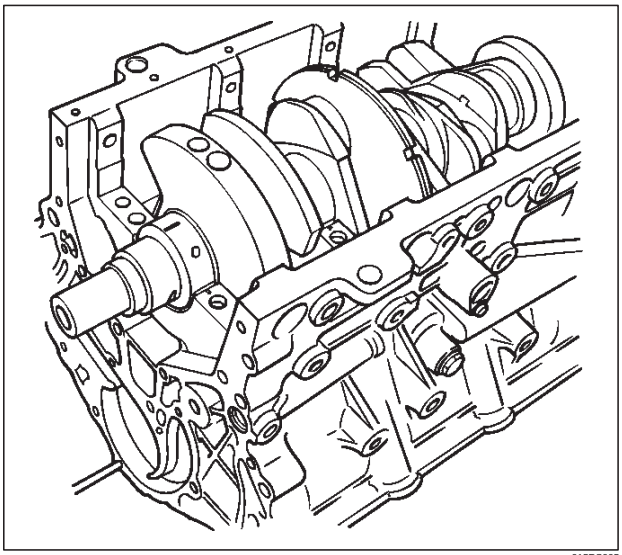

015RS005

Downloaded from www.Manualslib.com manuals search engine

9. Install main bearing caps, oil gallery and crank case bolts in the order shown, and tighten each bolt to the specified torque.

NOTE: Do not apply engine oil to the crank case side bolts.

Main bearing cap bolts.

Torque: 39 N·m (29lb ft)

Oil gallery fixing bolts.

Torque:

1st step: 29 N·m (21 lb ft)

2nd step 55˚~ 65˚

Crank case side bolts

Torque : 39 N·m (29lb ft)

NOTE: Do not allow the crankshaft to rotate.

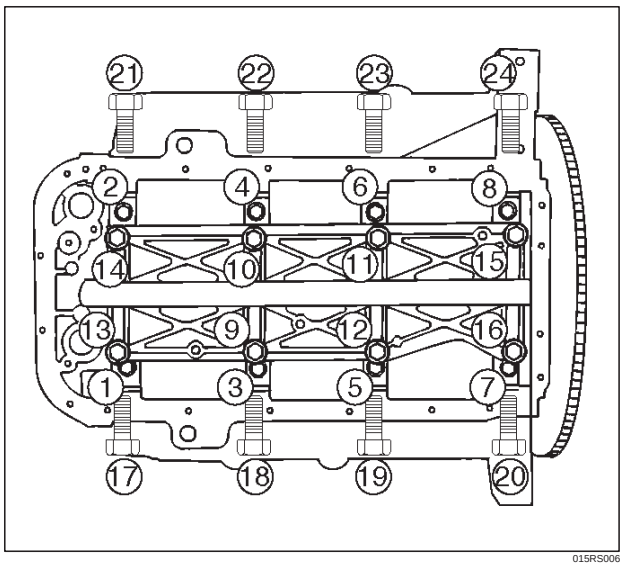

015RS006

10. Remove the main bearing caps in the sequence shown in the illustration.

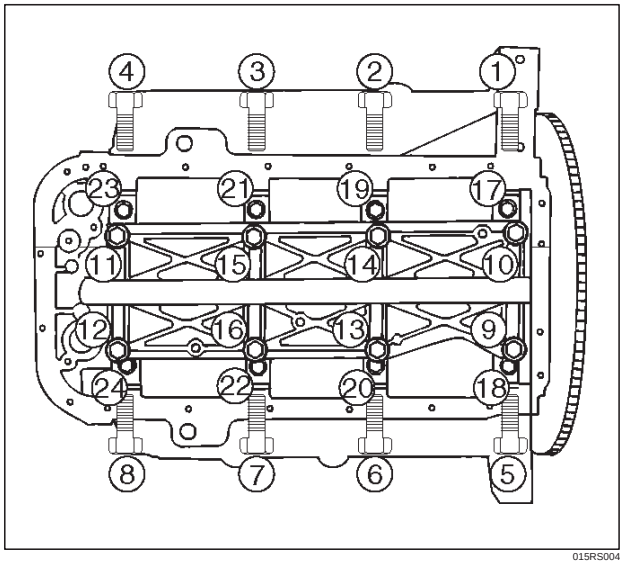

015RS004

11. Measure the plastigage width and determine the oil clearance. If the oil clearance exceeds the specified limit, replace the main bearings as a set and/or replace the crankshaft.

Standard : 0.019 mm–0.043 mm (0.0007 in–0.0017 in)

Limit : 0.08 mm (0.0031 in)

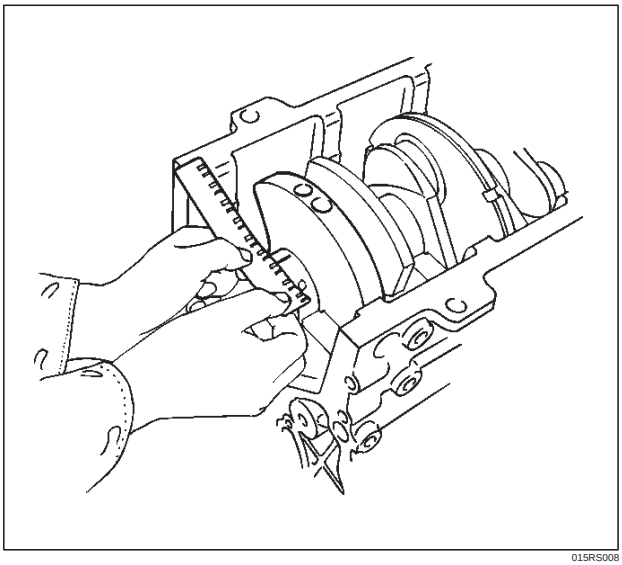

015RS008

12. Clean the plastigage from the bearings and the crankshaft.
    Remove the crankshaft and the bearings.

Crankshaft (12) Inspection

Inspect the surface of the crankshaft journal and crank pins for excessive wear and damage. Inspect the oil seal fitting surfaces for excessive wear and damage. Inspect the oil ports for obstructions.

Inspection and Repair

1. Carefully set the crankshaft on the V–blocks. Slowly rotate the crankshaft and measure the runout. If the crankshaft runout exceeds the specified limit, the crankshaft must be replaced.

Runout : 0.04 mm (0.0016 in)

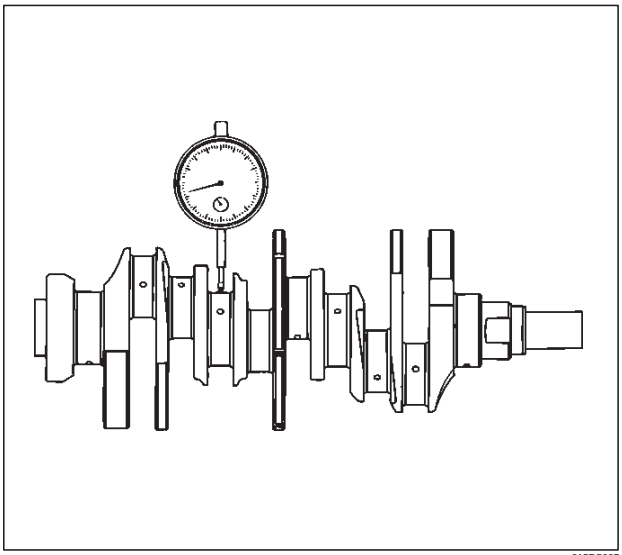

015RS007

Downloaded from www.Manualslib.com manuals search engine

2. Measure the diameter and the uneven wear of main journal and crank pin. If the crankshaft wear exceeds the specified limit, crankshaft must be replaced.

Main journal diameter : 63.918 mm–63.933 mm (2.5165 in–2.5170 in)

Crank pin diameter : 53.922 mm–53.937 mm (2.1229 in.–2.1235 in.)

Uneven wear limit : 0.005 mm (0.0002 in)

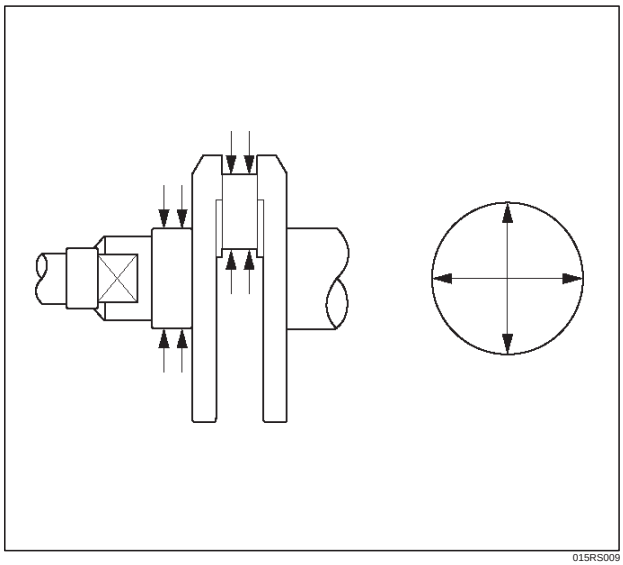

015RS009

Crankshaft Bearing Selection

When installing new crankshaft bearings or replacing bearings, refer to the selection table below. Select and install the new crankshaft bearings, paying close attention to the cylinder block journal hole.

1. Diameter size mark (1) and the crankshaft journal.

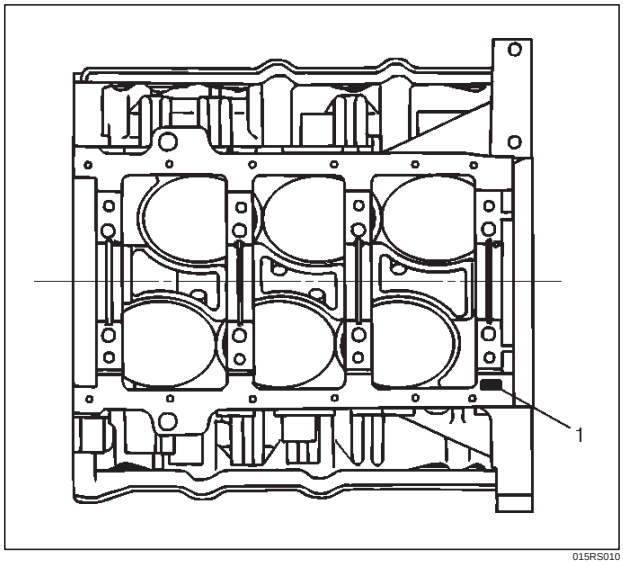

015RS010

2. Diameter size mark (1).
   The diameter size marks are stamped on the No.1 crankshaft balancer as shown in the illustration.

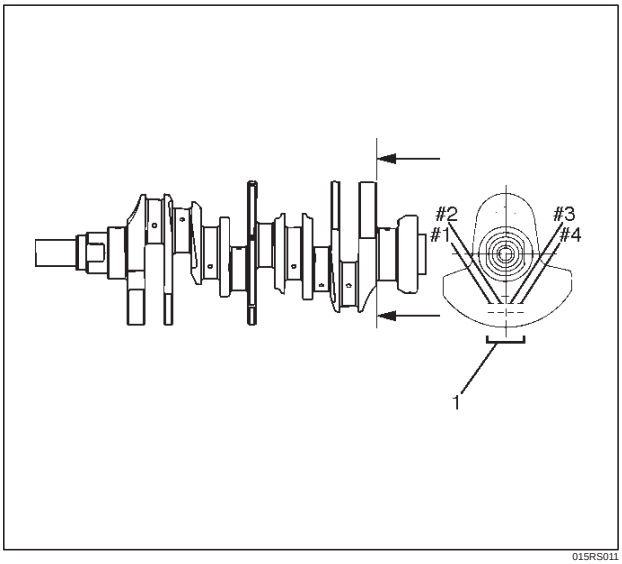

015RS011

NOTE: Take care to ensure the bearings are positioned correctly.

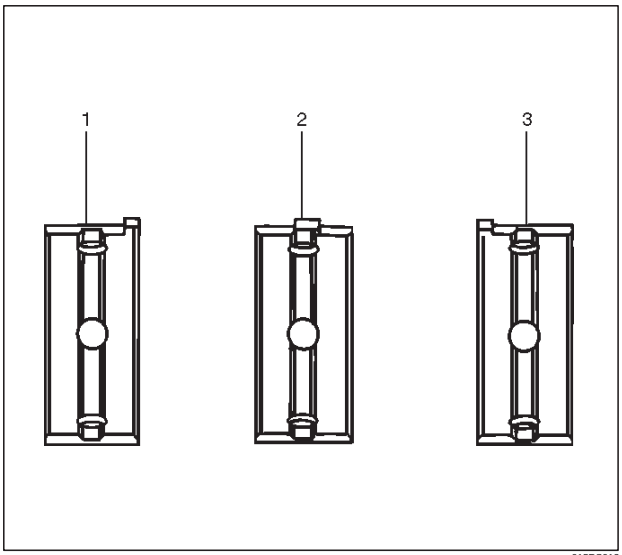

015RS012

Legend

(1) Number 1 and 4 main bearing upper and lower
(2) Number 2 and 3 main bearing upper
(3) Number 2 and 3 main bearing lower

Downloaded from www.Manualslib.com manuals search engine

1 Size Mark	Main Bearing Bore Diameter	Crank Shaft Main Journal Diameter	2 Size Mark	Crank Shaft Bearing Size Mark (Upper Side)	Crank Shaft Bearing Size Mark (Lower Side)	Oil Clearance (Reference)
1	68.994-69.000 (2.7163-2.7165)	63.918-63.925 (2.5165-2.5167)	2	Blue	Blue	0.030-0.049 (0.0012-0.0019)
		63.926-63.933 (2.5168-2.5170)	1	Brown	Brown	0.028-0.047 (0.0011-0.0019)
2	68.987-68.993 (2.7160-2.7163)	63.918-63.925 (2.5165-2.5167)	2			0.029-0.048 (0.0011-0.0019)
		63.926-63.933 (2.5168-2.5170)	1	Green	Green	0.027-0.046 (0.0011-0.0018)
3	68.980-68.986 (2.7157-2.7160)	63.918-63.925 (2.5165-2.5167)	2			0.028-0.047 (0.0011-0.0019)
		63.926-63.933 (2.5168-2.5170)	1	Yellow	Yellow	0.026-0.045 (0.0010-0.0018)

Reassembly

1. Crankshaft (12)
   - Install the main bearings to the cylinder block and the main bearing caps.
   - Be sure that they are positioned correctly.
   - Apply new engine oil to the upper and lower main bearing faces.

NOTE: Do not apply engine oil to the main bearing back faces.

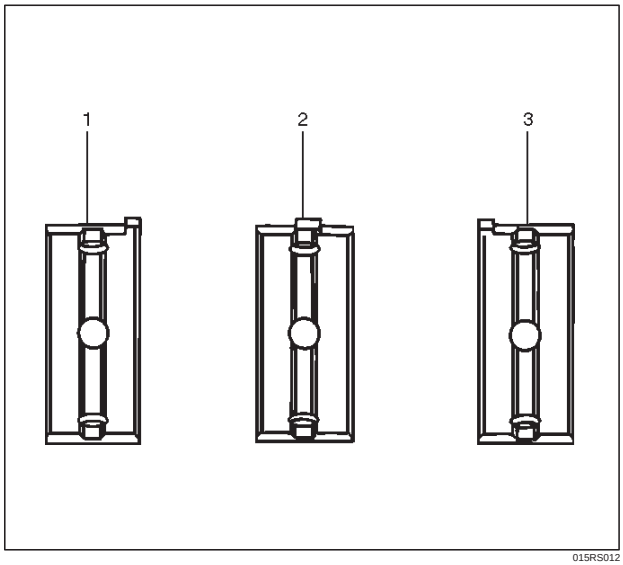

015RS012

- Carefully mount the crankshaft.
- Apply engine oil to the thrust washer.
- Assemble the thrust washer to the No.3 bearing journal. The oil grooves must face the crankshaft.

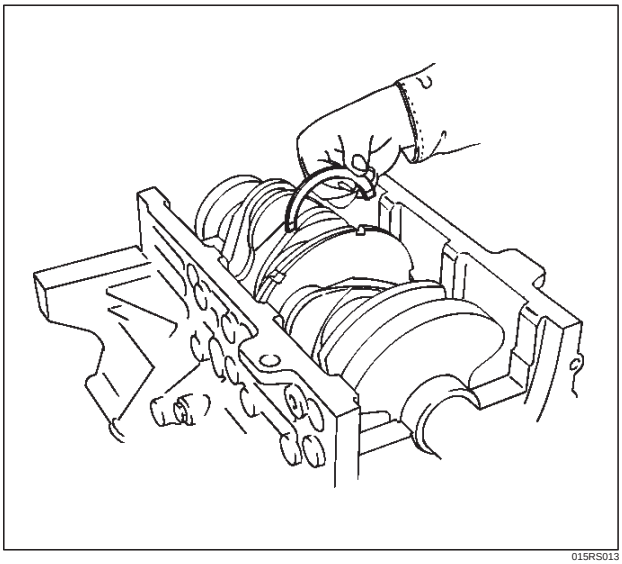
015RS013

2. Rear oil seal (10)
   - Remove the oil from the cylinder block and the retainer mounting surface.
   - Apply sealant (TB–1207B or equivalent) to the retainer mounting surface, following the pattern shown in the illustration.

     The retainer must be installed within 5 minutes after sealant application befor the sealant hardens.

Downloaded from www.Manualslib.com manuals search engine

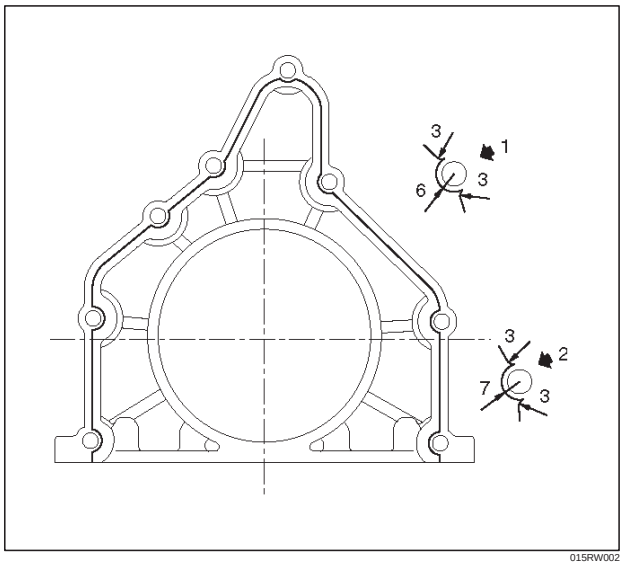

015RW002

Legend

(1) Around Bolt Holes
(2) Around Dowel Pin

- Apply engine oil to the oil seal lip.
- Align the cylinder block dowel pin holes with the rear retainer dowel pins.
- Tighten the rear retainer fixing bolts. New bolts should be used when installing rear retainer.

Torque: 18 N·m (13 lb ft)

NOTE: Be very careful not to disengage the oil seal garter spring during installation of the rear retainer.

If the seal was removed from retainer for replacement, apply engine oil to the oil seal lip and install the oil seal using J–39201 oil seal installer.

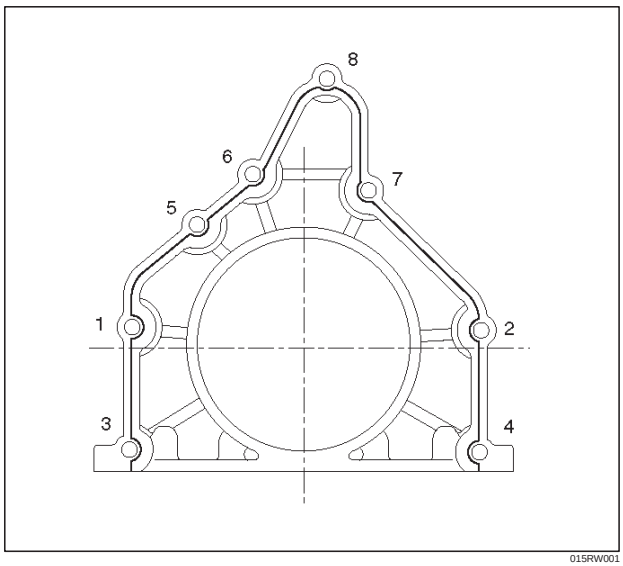

015RW001

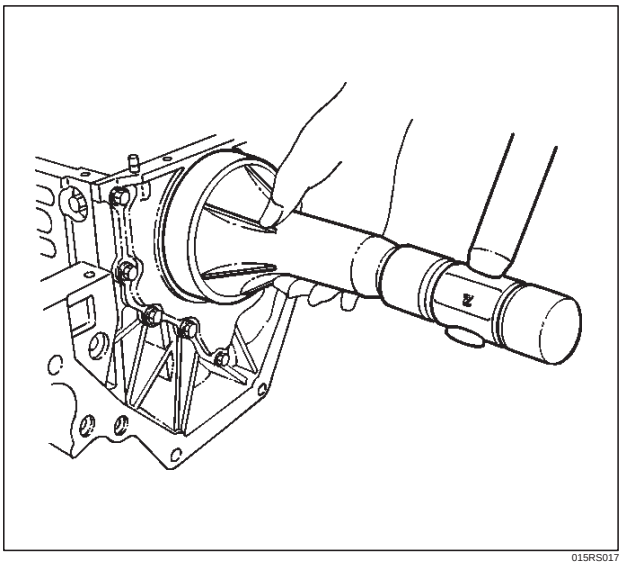

015RS017

3. Flywheel (9)
   1. Thoroughly clean and remove the oil from the threads of crankshaft.
   2. Remove the oil from the crankshaft and flywheel mounting faces.
   3. Mount the flywheel on the crankshaft and then install the washer.
   4. Hold the crankshaft to prevent from rotating then install the bolts in the order shown to the specified torque.

Torque: 54 N·m (40 lb ft)

NOTE: Do not reuse the bolt and do not apply oil or thread lock to the bolt.

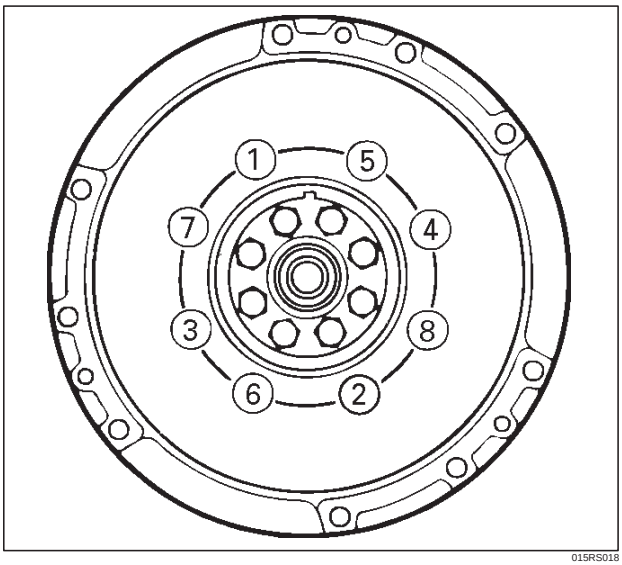

015RS018

Downloaded from www.Manualslib.com manuals search engine

4. Piston and connecting rod assembly (8)
   - Apply engine oil to the cylinder bores, the connecting rod bearings and the crankshaft pins. Check to see that the piston ring end gaps are correctly positioned.

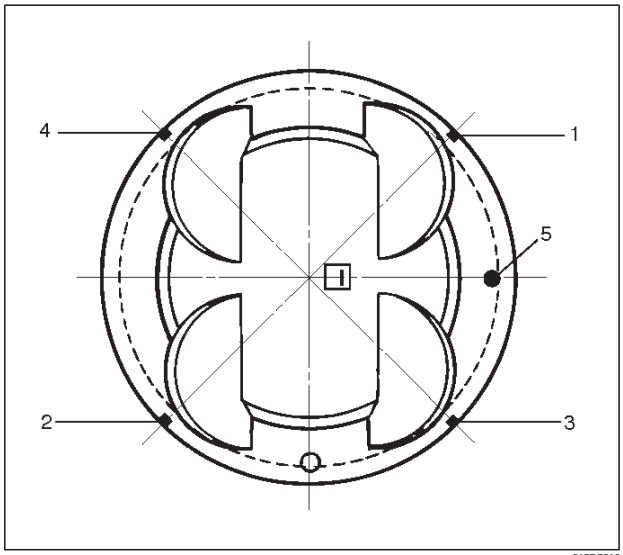

015RS019

Legend

(1) No.1 Compression Ring
(2) No.2 Compression Ring
(3) Oil Ring Side Rail Upper
(4) Oil Ring Side Rail Lower
(5) Piston Front Mark

- Insert the piston/connecting rod assemblies into each cylinder with the piston ring compressor. The front marks must be facing the front of the engine.
- Match the numbered caps with the numbers on the connecting rods. Align the punched marks on the connecting rods and caps.
- Apply engine oil to the threads and seating faces of the nuts.
- Tighten the nuts.

Torque: 54 N·m (40 lb ft)

After tightening the cap nuts, check to see that the crankshaft rotates smoothly.

NOTE: Do not apply engine oil to the bearing back faces.

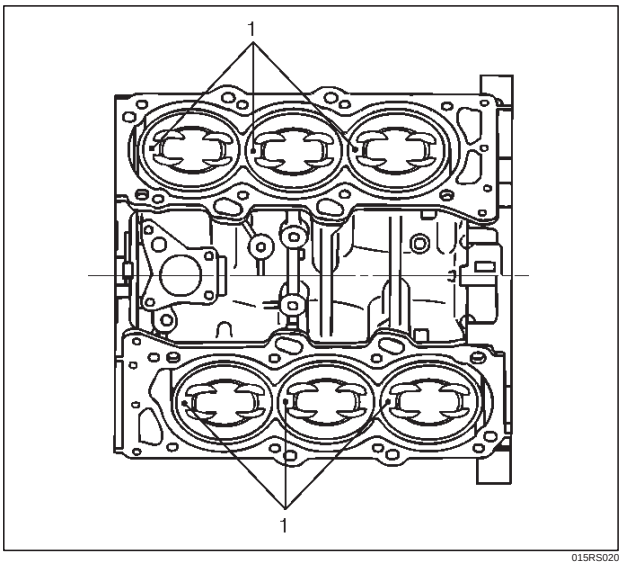

015RS020

5. Install oil gallery (7) and tighten the bolts in 2 steps, in the order shown.

1st step: 29 N·m (22 lb ft)

2nd step: 55˚~ 65˚

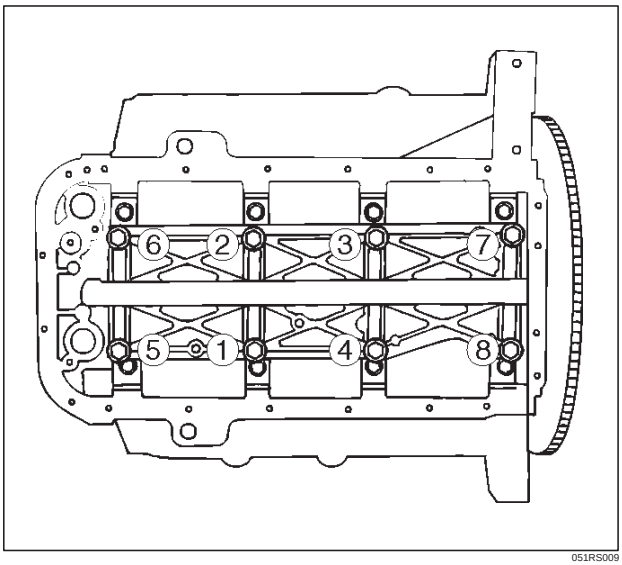

051RS009

6. Cylinder block side bolts (6)
   - Tighten all the bolts to the specified torque in the order shown.

NOTE: Do not apply engine oil to the crank case side bolts.

Torque: 39 N·m (29 lb ft)

Downloaded from www.Manualslib.com manuals search engine

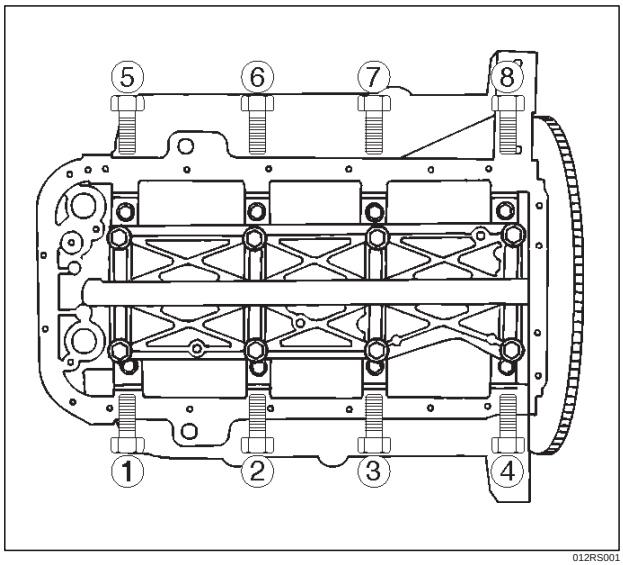

012RS001

7. Install oil pump assembly (5), refer to “Oil pump” in this manual.
8. Install oil strainer and O-ring (4).
9. Install oil pipe and O-ring (3) and tighten the bolts.

   Torque: 25 N·m (18 lb ft)

10. Install crankcase with oil pan (2).
    1. Completely remove all residual sealant, lubricant and moisture from the sealing surfaces. The surfaces must be perfectly dry.
    2. Apply a correct width bead of sealant (TB—1207C or its equivalent) to the contact surfaces of the oil pan. There must be no gaps in the bead.
    3. The crankcase assembly must be installed within 5 minutes after sealant application to prevent premature hardening of the sealant.
    4. Tighten the bolts and nuts to the specified torque.

    Torque : 10 N·m (89 lb in)

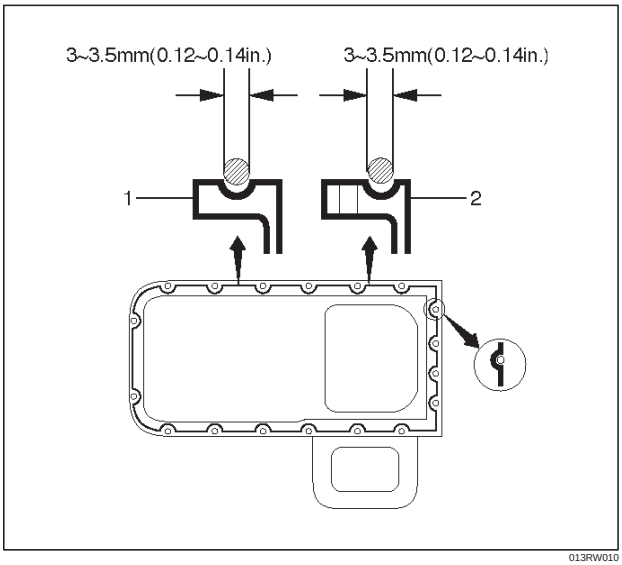

013RW010

Legend

(1) Portion Between Bolt Holes
(2) Bolt Hole Portion

11. Install cylinder head assembly, refer to “Cylinder head” in this manual.

Downloaded from www.Manualslib.com manuals search engine

Piston and Connecting Rod

Piston, Connecting Rod and Associate Parts

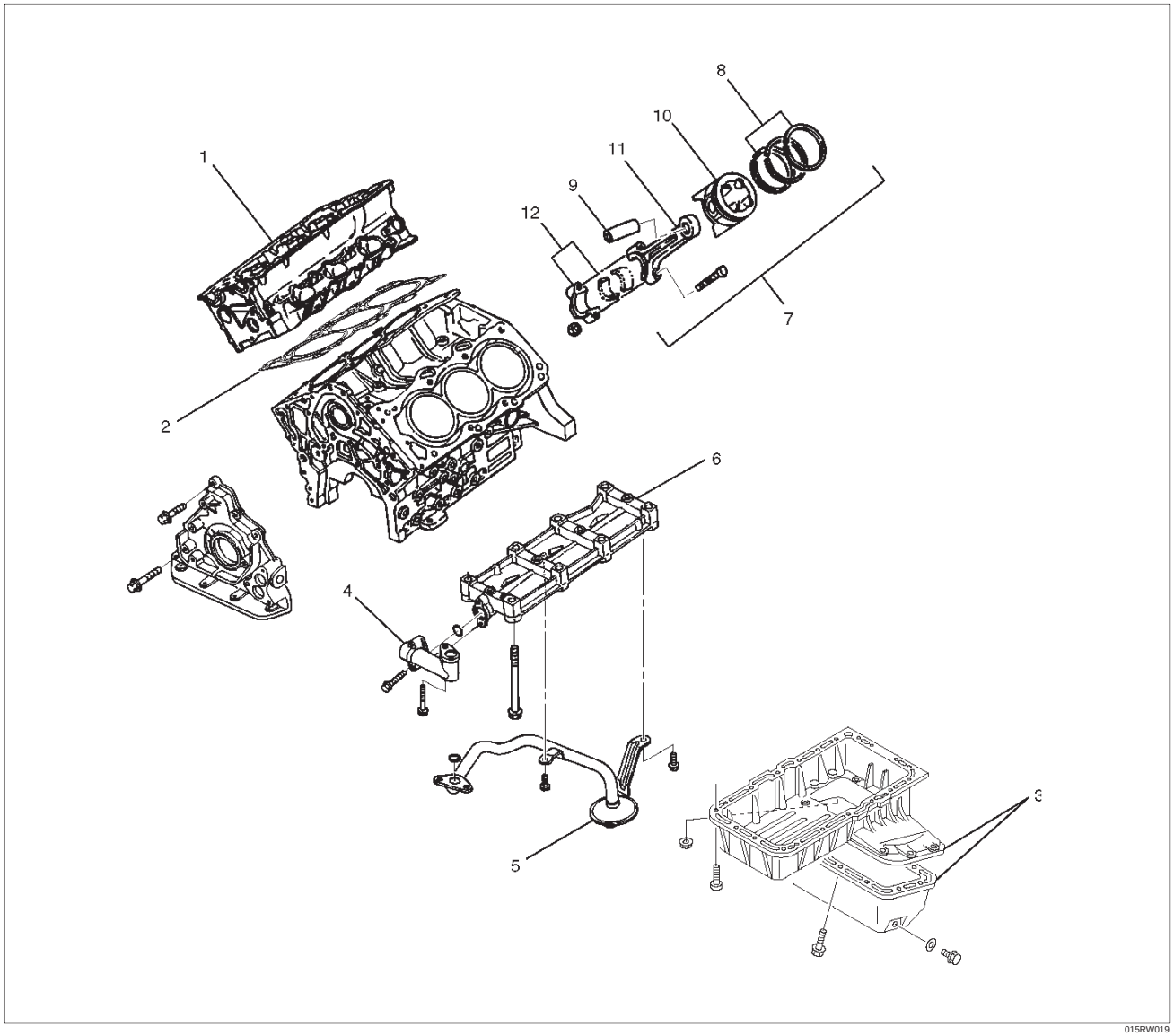

Legend

(1) Cylinder Head Assembly
(2) Cylinder Head Gasket
(3) Crankcase with Oil Pan
(4) Oil Pipe and O-Ring
(5) Oil Strainer and O-Ring
(6) Oil Gallery
(7) Piston and Connecting Rod Assembly
(8) Piston Ring
(9) Piston Pin
(10) Piston
(11) Connecting Rod
(12) Connecting Rod Cap

Disassembly

1. Remove cylinder head assembly (1). Refer to “Cylinder Head Removal” in this manual.
2. Remove cylinder head gasket (2).
3. Remove crankcase with oil pan (3). Refer to“Oil Pan and Crankcase” in this manual.
4. Remove oil pipe and O-ring (4).
5. Remove oil strainer and O-ring (5).
6. Remove oil gallery (6).
7. Remove connecting rod cap with connecting rod lower bearing (12).
8. Remove piston and connecting rod assembly (7).

NOTE: Before removing piston and connecting rod assembly, measure thrust clearance.

Downloaded from www.Manualslib.com manuals search engine

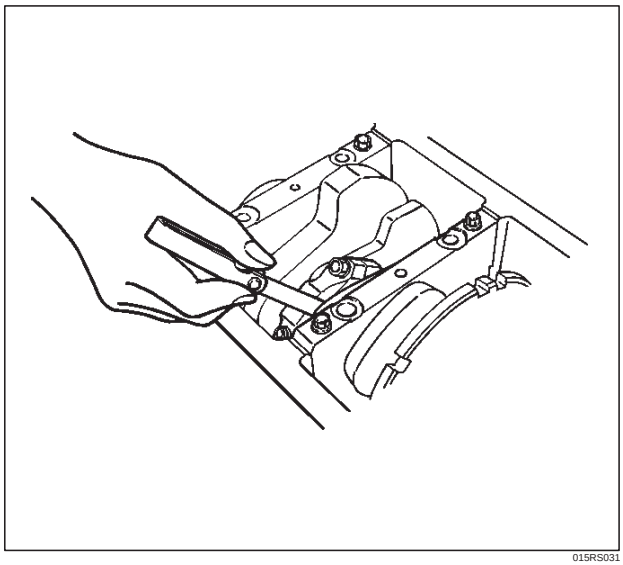

015RS031

- Remove any ridge or carbon build up from the top end of the cylinder.

9. Remove the piston rings (8) with a piston ring expander. Arrange the removed piston rings in the cylinder number order.

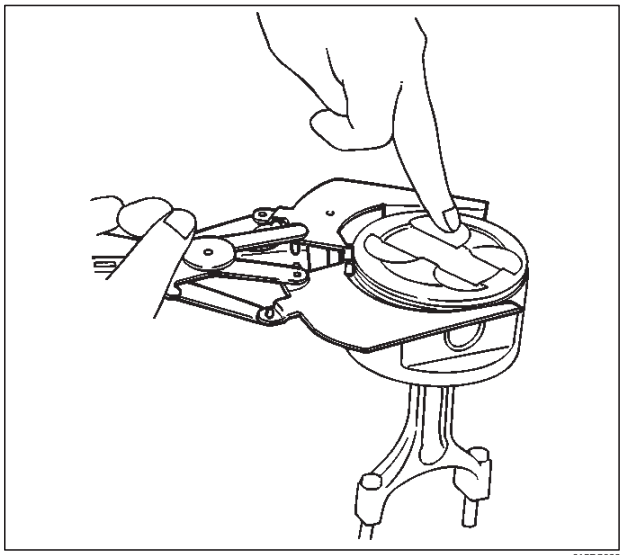

015RS022

10. Remove the piston pin (9) using J–24086–C piston pin service set and piston support with a press.

NOTE: Keep the parts removed from each cylinder separate. All parts must be reinstalled in their original positions. Heating the connecting rod will permit easy removal of the piston pin.

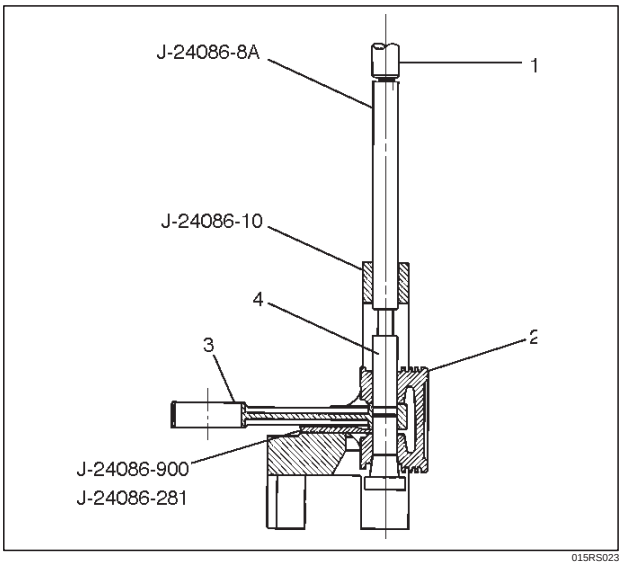

015RS023

Legend

(1) Press Ram
(2) Piston
(3) Connecting Rod
(4) Piston Pin

11. Piston (10)
12. Connecting rod (11)

Inspection and Repair

Pistons (10)

Carefully clean away all the carbon adhering to the piston head and the piston ring grooves.

NOTE: Never use a wire brush to clean the pistons. Damage will result. Visually check each piston for cracking, scoring, and other signs of excessive wear. If any of the above conditions are found, the piston must be replaced.

Piston Diameter

1. Measure the piston outside diameter with micrometer at the piston grading position and a right angle to the piston pin.
   Piston grading position (from piston head)

   Piston grading position : 43.0 mm (1.6929 in)

Downloaded from www.Manualslib.com manuals search engine

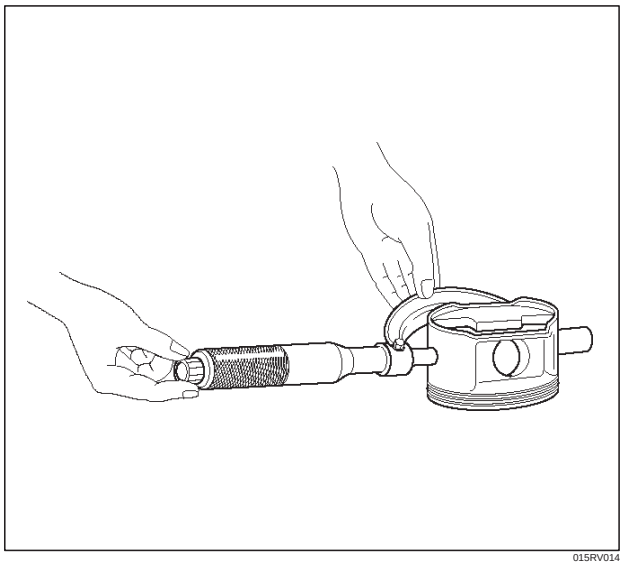

015RV014

The size mark (1) for piston outside diameter is represented as shown in illustration below.

Outside Diameter

Size Mark A : 93.360 mm–93.370 mm (3.6756 in–3.6760 in)

Size Mark B : 93.371 mm–93.380 mm (3.6760 in–3.6764 in)

Size Mark C : 93.381 mm–93.390 mm (3.6764 in–3.6768 in)

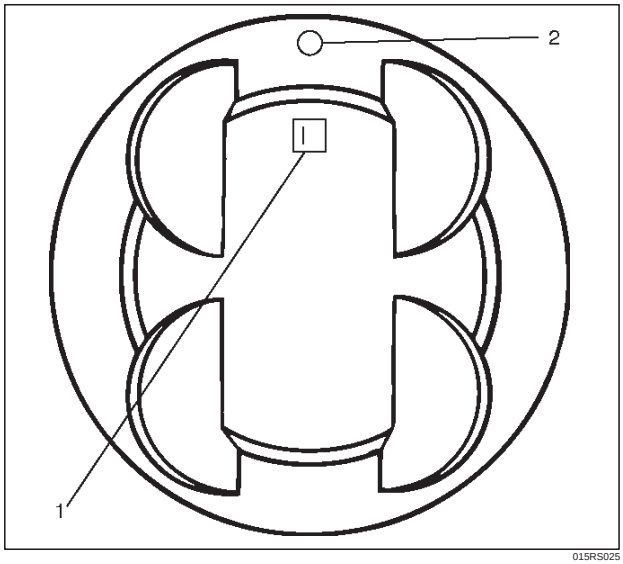

015RS025

Measure the cylinder bore inside diameter (refer to “Cylinder Block” in this manual).

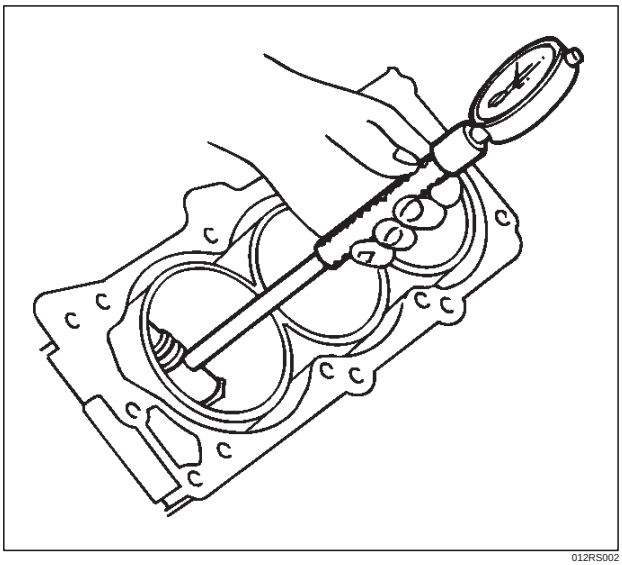

012RS002

Piston Rings (8)

Any worn or damaged part discovered during engine overhaul must be replaced with a new one.

1. Ring end gap measurement
   - Insert the piston ring into the bore.
   - Push the ring by the piston, at a right angle to the wall, into the point at which the cylinder bore diameter is the smallest.
   - Measure the ring end gap.

Compression Ring

1st ring	
Standard:	**0.300 mm–0.400 mm (0.0118 in–0.0157 in)**
Limit:	**1.0 mm (0.0394 in)**
2nd ring	
Standard:	**0.450 mm–0.600 mm (0.0177 in–0.0236 in)**
Limit:	**1.2 mm (0.0472 in)**
Oil ring	
Standard:	**0.150 mm–0.450 mm (0.0059 in–0.0177 in)**
Limit:	**1.05 mm (0.0413 in)**

Downloaded from www.Manualslib.com manuals search engine

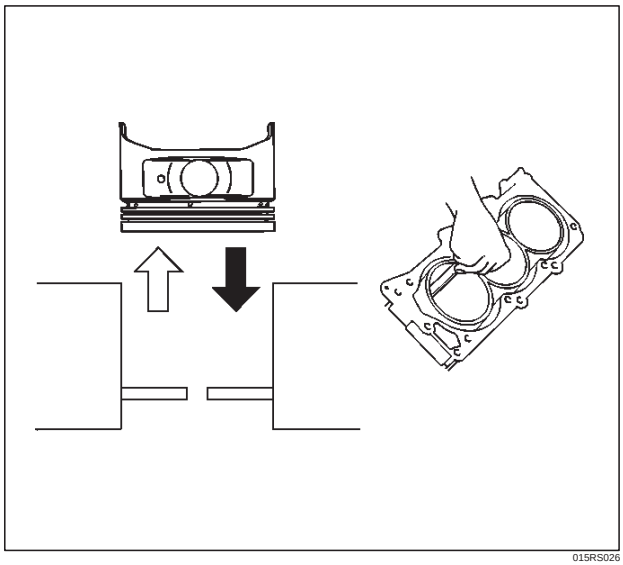

015RS026

- Positioning mark (1) is painted as shown in the illustration.

Marked T : No.1 Compression ring

Marked T2 : No.2 Compression ring

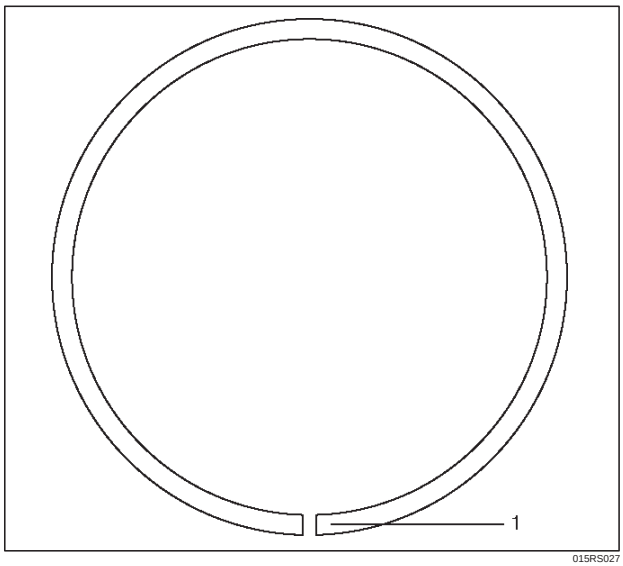

015RS027

2. Measure the clearance between the piston ring groove and the piston ring with a feeler gauge. If the piston ring groove / piston ring clearance exceeds the specified limit, the piston must be replaced.

Compression Ring Clearance

Standard : 0.016 mm–0.038 mm (0.0006 in.–0.0015 in)

Limit : 0.15mm (0.0059 in)

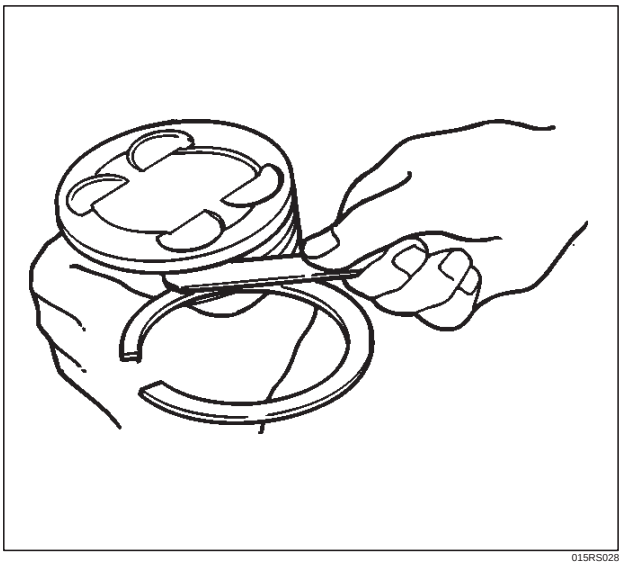

015RS028

Piston Pin (9)

NOTE: Do not reuse the old piston pin.

1. Use a micrometer to measure the new piston pin outside diameter in both directions at three different positions.
2. Measure the inside diameter of the connecting rod small end. If the fitting interference between the small end and pin does not conform to the specified value, the connecting rod must be replaced.

Standard : 0.023 mm–0.038 mm (0.0009 in–0.0015 in)

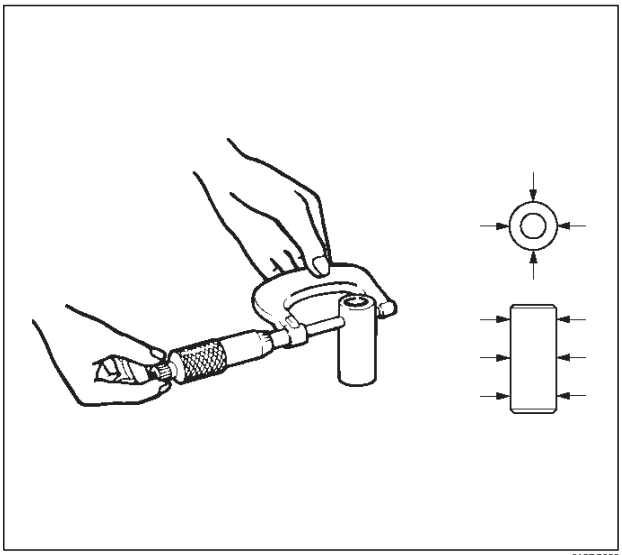

015RS029

Downloaded from www.Manualslib.com manuals search engine

3. Insert the new pin into the piston and rotate it. If the pin rotates smoothly with no backlash, the clearance is normal. If there is backlash or roughness, measure the clearance. If the clearance exceeds the specified limit, the piston must be replaced.

Clearance

Standard : 0.010 mm–0.017 mm (0.0004 in.–0.0007 in)

Limit : 0.040 mm (0.0016 in)

Connecting Rods (11)

1. Check the connecting rod alignment If either the bend or the twist exceeds the specified limit, the connecting rod must be replaced.

Bend per 100 mm (3.937 in)

Limit: 0.15 (0.0059)

Twist per 100 mm (3.937 in)

Limit: 0.20 (0.0078)

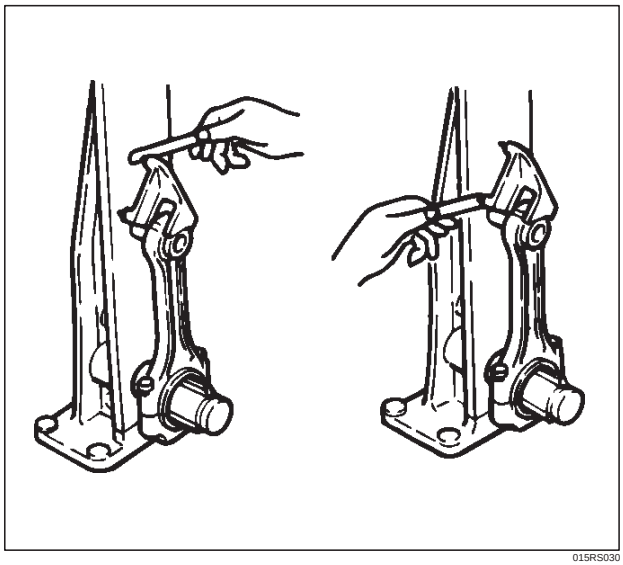

015RS030

2. Measure the connecting rod thrust clearance. Use a feeler gauge to measure the thrust clearance at the large end of the connecting rod If the clearance exceeds the specified limit, the connecting rod must be replaced.

Standard : 0.16 mm–0.35 mm (0.0063 in.–0.0138 in)

Limit : 0.40 mm (0.0157 in)

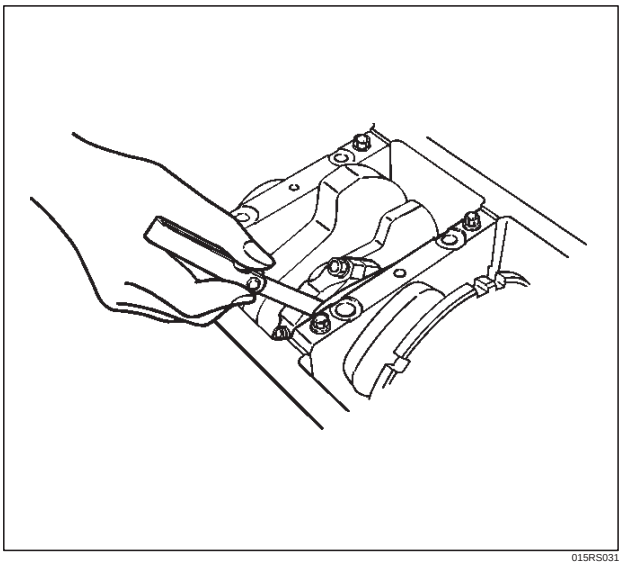

015RS031

3. Measure the oil clearance between the connecting rod and the crankshaft.
   1. Remove the connecting rod cap nuts and the rod caps (12).
      Arrange the removed rod caps in the cylinder number order.
   2. Clean the rod bearings and the crankshaft pins.
   3. Carefully check the rod bearings. If even one bearing is found to be damaged or badly worn, the entire bearing assembly must be replaced as a set. Reinstall the bearings in their original positions. Apply plastigage to the crank pin.

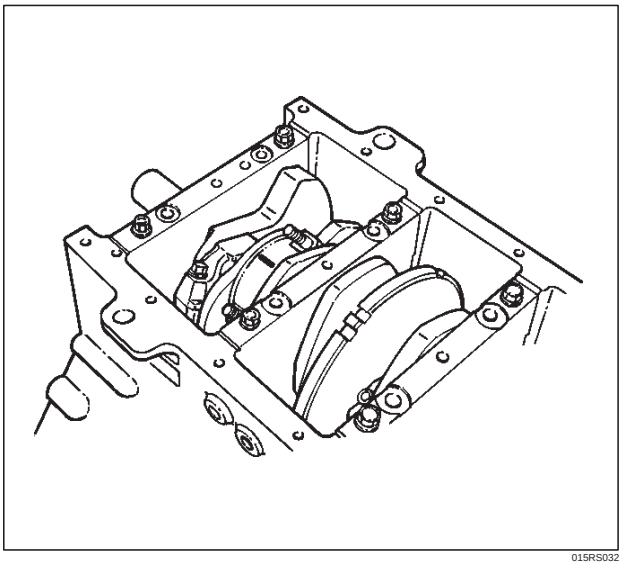

015RS032

   4. Reinstall the rod caps (12) to their original positions.
      Tighten the rod cap nuts.

Torque: 54 N·m (40 lb ft)

NOTE: Do not allow the crankshaft to rotate.

Downloaded from www.Manualslib.com manuals search engine

5. Remove the rod caps.
6. Measure the width of the plastigage and determine the oil clearance. If the oil clearance exceeds the limit, replace the rod bearing as a set.

Standard : 0.019 mm–0.043 mm (0.0007 in–0.0017 in)

Limit : 0.08 mm (0.003 in)

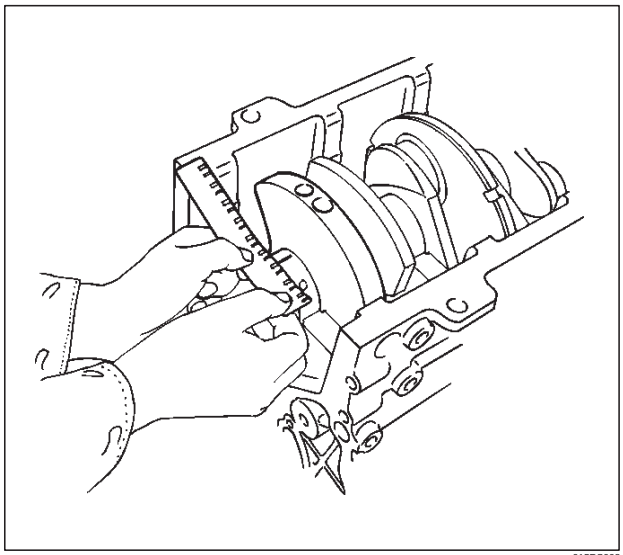

015RS008

7. Clean the plastigage from the bearings and the crankshaft pins.

Con–rod Bearing Selection

Select and install the new connecting rod bearings, paying close attention to the connecting rod big end diameter size mark (1).

NOTE: Take care not to confuse the alignment mark (2) and the size mark (1) during the installation procedure.

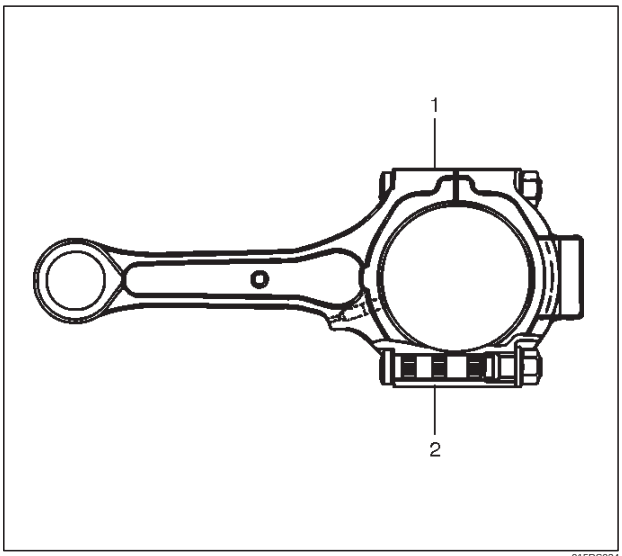

015RS034

1 Size Mark	Big end Bore Diameter	Crankshaft Pin Diameter	Connecting Rod Bearing Thickness (Reference)	Color of Size Mark	Oil Clearance (Reference)
A	56.994-57.000 (2.2439-2.2441)	53.922-53.937 (2.1229-2.1235)	1.512-1.516 (0.0595-0.0597)	Yellow	0.025-0.054 (0.0010-0.0021)
B	56.988-56.994 (2.2436-2.2439)		1.508-1.512 (0.0594-0.0595)	Green	0.027-0.056 (0.0011-0.0022)
C	56.982-56.988 (2.2434-2.2436)		1.504-1.508 (0.0592-0.0594)	Pink	0.029-0.058 (0.0011-0.0023)

Reassembly

1. Install connecting rod
2. Install piston
3. Install piston pin
   - Apply a thin coat of engine oil to the piston pin. Try to insert the piston pin into the piston pin hole with normal finger pressure.

NOTE: When changing piston / connecting rod combinations, do not change the piston / piston pin combination and do not reuse the old piston pin.

- Attach the piston to the connecting rod with the piston front mark and the connecting rod front mark on the same side.

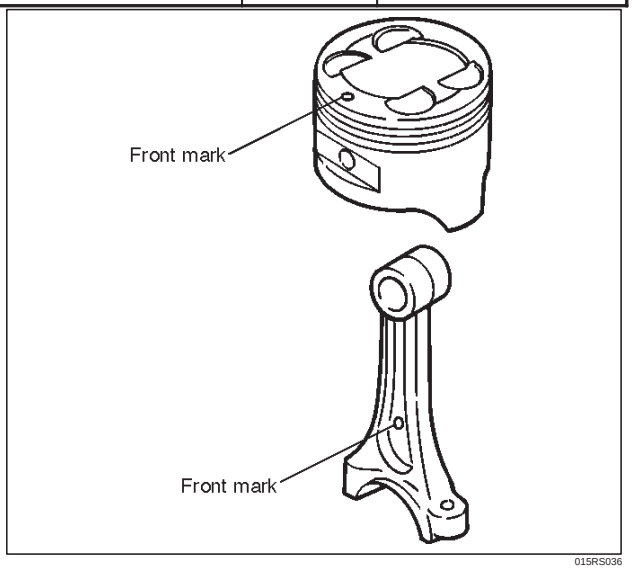

015RS036

Downloaded from www.Manualslib.com manuals search engine

- With J–24086–C Piston pin service set and a press, press fit the piston pin.

NOTE: Heat the connecting rod small end to a suitable temperature to ensure smooth installation.

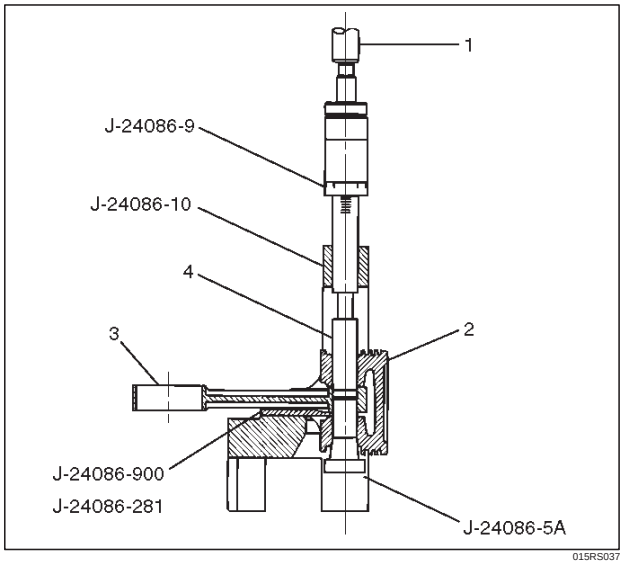

015RS037

Legend

(1) Press Ram
(2) Piston
(3) Connecting Rod
(4) Piston Pin

4. Install piston ring with the piston ring expander. The compression ring must be set with the T mark (1) facing up.

Marked T : No.1 Compression ring

Marked T2 : No.2 Compression ring

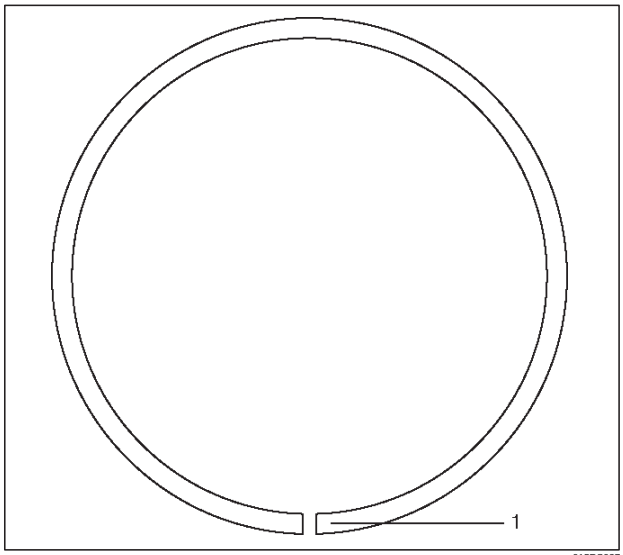

015RS027

- Install piston rings in the following sequence.

1. Oil ring
   1. Expander ring
   2. Upper side rail
   3. Lower side rail
2. 2nd compression ring
3. 1st compression ring

- The compression rings must be set with the T or T2 mark facing up.

Marked T : No.1 Compression ring

Marked T2 : No.2 Compression ring

- After installation, apply engine oil to the entire circumference of the piston rings. Check to see that all the rings rotate smoothly.

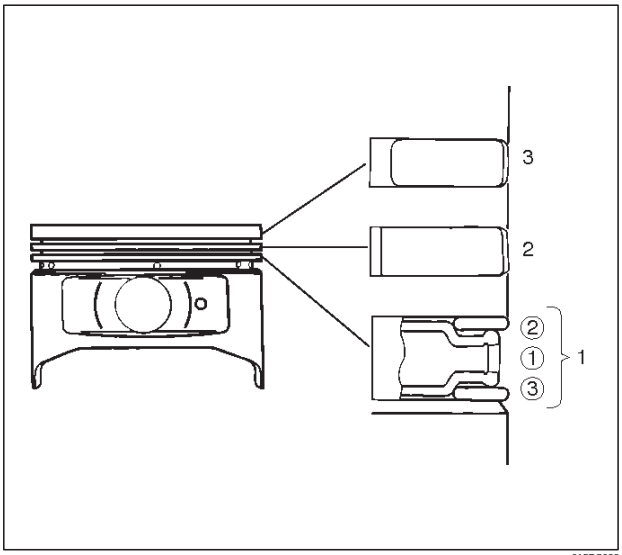

015RS038

5. Install piston and connecting rod assembly.
   - Insert the bearings into the connecting rods and caps. Apply new engine oil to the bearing faces and nuts.
   - Tighten the connecting rod cap nuts

Torque : 54 N·m (40 lb ft)

NOTE: Do not apply engine oil to the bearing back faces.

6. Oil gallery, refer to “Crankshaft and main bearing” in this manual.
7. Oil strainer and O-ring.
8. Oil pipe and O-ring.
9. Install crankcase with oil pan, refer to “Oil pan and Crankcase” in this manual.
10. Install cylinder head gasket.
11. Install Cylinder head assembly.
    - Refer to “Cylinder head” in this manual.

Downloaded from www.Manualslib.com manuals search engine

Cylinder Block

Cylinder Block and Associated Parts

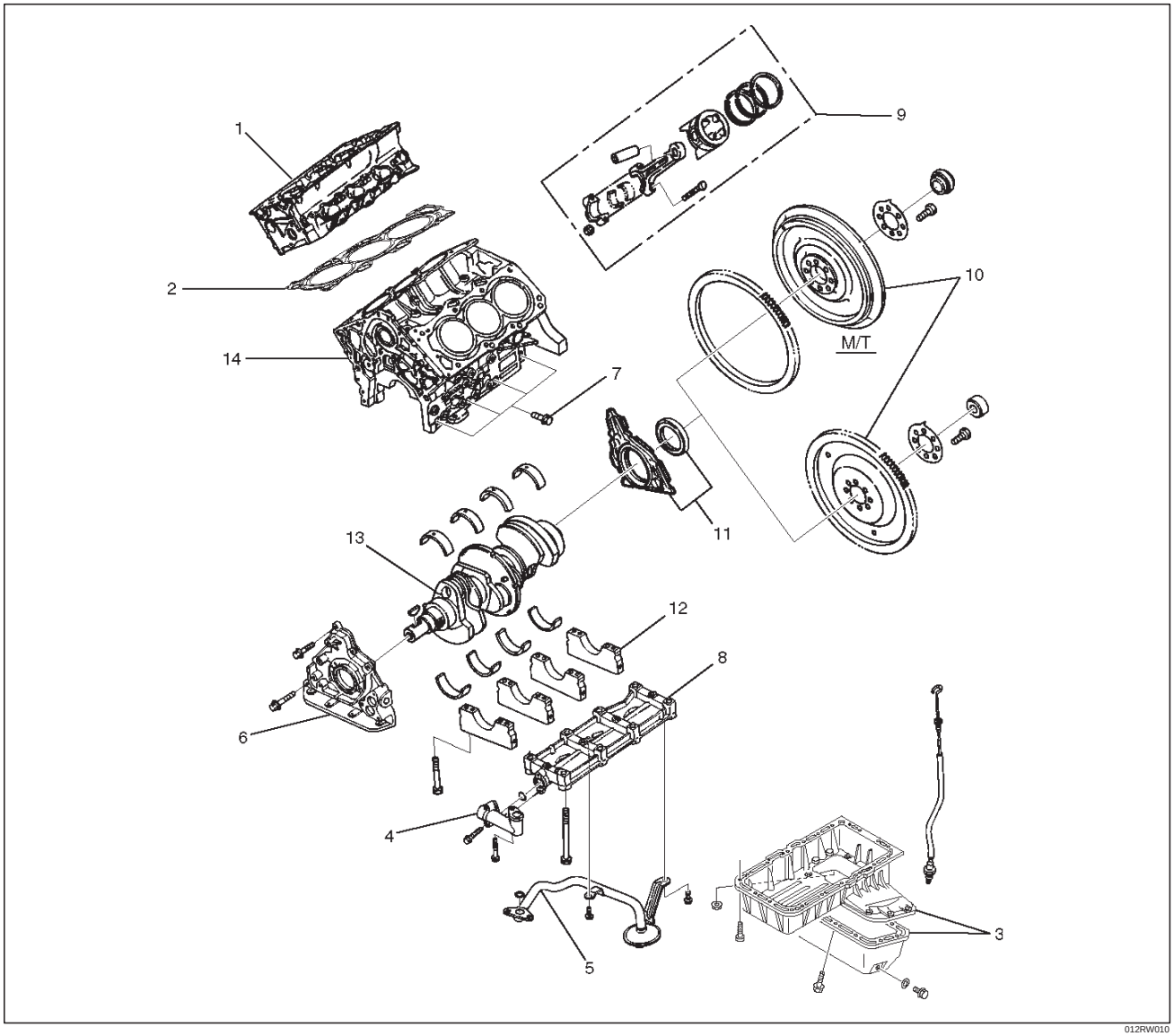

012RW010

Legend

(1) Cylinder Head Assembly
(2) Cylinder Head Gasket
(3) Crankcase with Oil Pan
(4) Oil Pipe and O-Ring
(5) Oil Strainer and O-Ring
(6) Oil Pump Assembly
(7) Cylinder Block Side Bolts
(8) Oil Gallery
(9) Piston and Connecting Rod Assembly
(10) Flywheel
(11) Rear Oil Seal Retainer Assembly
(12) Main Bearing Cap
(13) Crankshaft
(14) Cylinder Block

Disassembly

1. Remove cylinder head assembly.
2. Remove cylinder head gasket.
3. Remove crankcase with oil pan.
4. Remove oil pipe and O-ring.
5. Remove oil strainer and O-ring.
6. Remove oil pump assembly.
7. Remove crankcase side bolts.
8. Remove oil gallery.
9. Remove piston and connecting rod assembly.
10. Remove flywheel.

Downloaded from www.Manualslib.com manuals search engine

11. Remove rear oil seal retainer assembly.
12. Remove main bearing cap.
13. Remove crankshaft.
14. Remove cylinder block.

Inspection and Repair

1. Remove the cylinder head gasket and any other material adhering to the upper surface of the cylinder block. Be very careful not to allow any material to accidentally drop into the cylinder block. Be very careful not to scratch the cylinder block.
2. Carefully remove the oil pump, rear oil seal retainer, and crankcase assembly installation surface seal.
3. Wipe the cylinder block clean.
4. Visually inspect the cylinder block. If necessary, use a flaw detector to perform a dye penetrate and hydraulic (or air pressure) test. If cracking or other damage is discovered, the cylinder block must either be repaired or replaced.

Flatness

1. Using a straight–edge and feeler gauge, check that the upper surface of the cylinder block is not warped.

CAUTION: Be very careful not to allow any material to accidentally drop into the upper surface of the cylinder block. Be very careful not to scratch the upper surface of the cylinder block.

2. The cylinder block must be reground or replaced if the warpage exceeds the limit.

Warpage

Limit : 0.15 mm (0.0059 in)

Maximum repairable limit: 0.15 mm (0.0059 in)

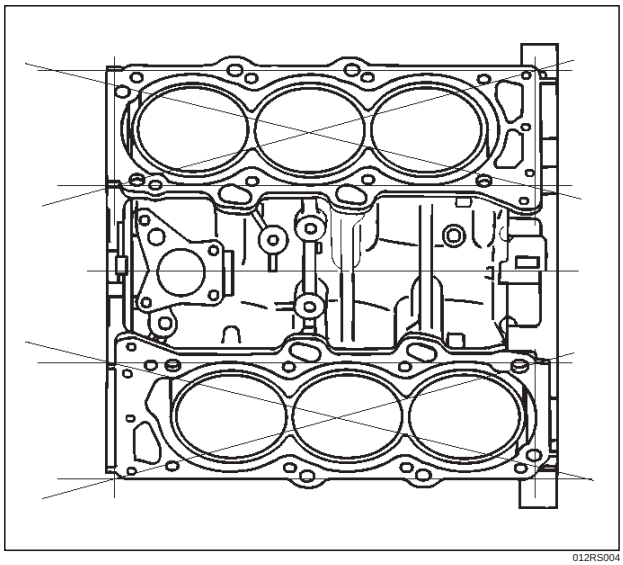

012RS004

Cylinder Bore

Use a cylinder gauge to measure the cylinder bore diameter in both the axial and thrust directions. Each measurement should be made at six points.

CAUTION: Be very careful not to allow any material to accidentally drop into the upper surface of the cylinder block. Be very careful not to scratch the upper surface of the cylinder block.

Cylinder Bore Inside Diameter

Limit : 93.530 (3.6823)

If the measurement exceed the specified limit, the cylinder block must be replaced.

Diameter

Grade A : 93.400 mm–93.410 mm (3.6772 in–3.6776 in)

Grade B : 93.411 mm–93.420 mm (3.6776 in–3.6779 in)

Grade C : 93.421 mm–93.430 mm (3.6780 in–3.6783 in)

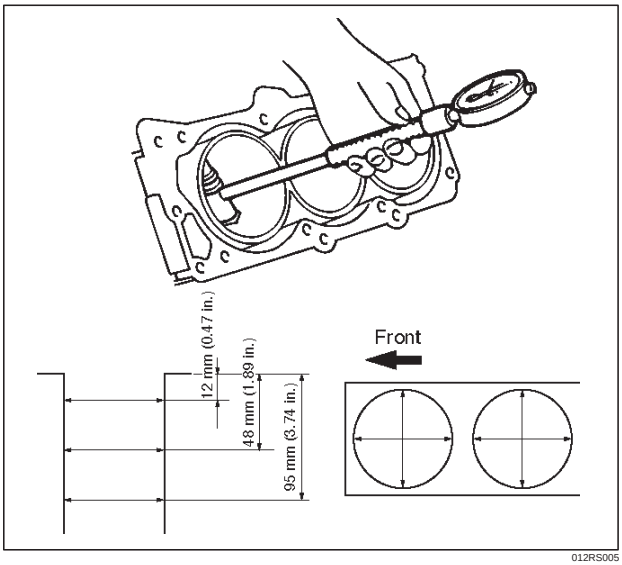

012RS005

NOTE: For information on piston diameter, please refer to the section ”Inspection of the Piston and Connecting Rod Assembly” in this manual.

Downloaded from www.Manualslib.com manuals search engine

- The ”Grade” mark (1) is stamped at the position illustrated.

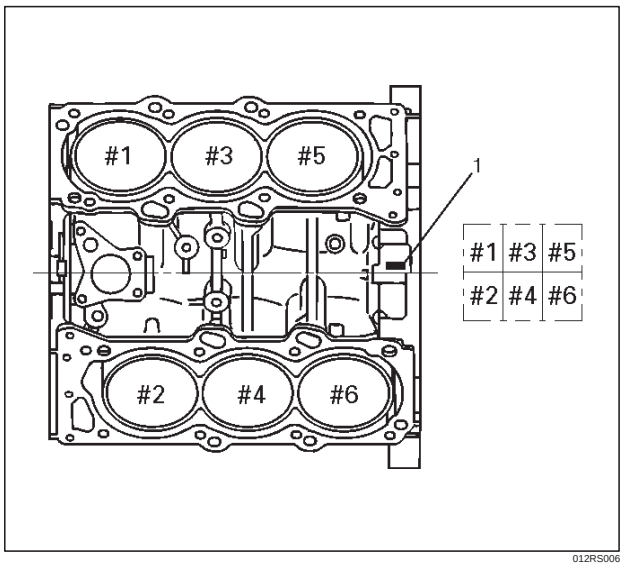

012RS006

Reassembly

1. Install cylinder block.
2. Install crankshaft.
   - Install the main bearings to the cylinder block and the main bearing caps.
   - Be sure that they are positioned correctly.
   - Apply new engine oil to the upper and lower main bearing faces.

NOTE: Do not apply engine oil to the bearing back faces.

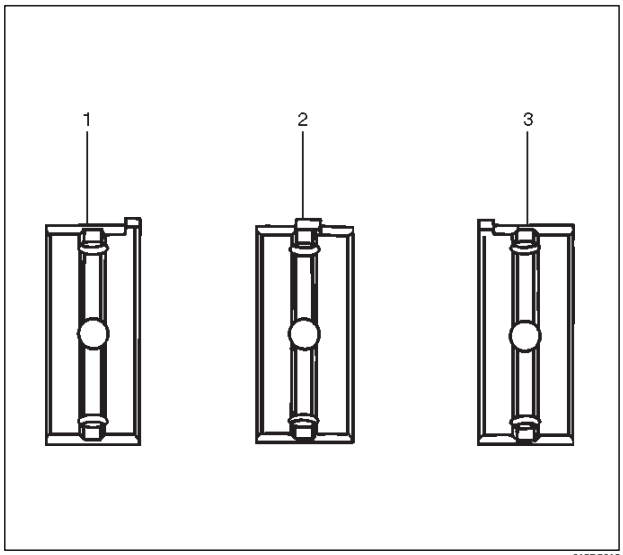

015RS012

Legend

(1) Number 1 and 4 main bearing upper and lower.
(2) Number 2 and 3 main bearing upper.
(3) Number 2 and 3 main bearing lower.

- Carefully mount the crankshaft.
- Apply engine oil to the thrust washer.
- Assemble the thrust washer to the No. 3 bearing journal. The oil grooves must face the crankshaft.

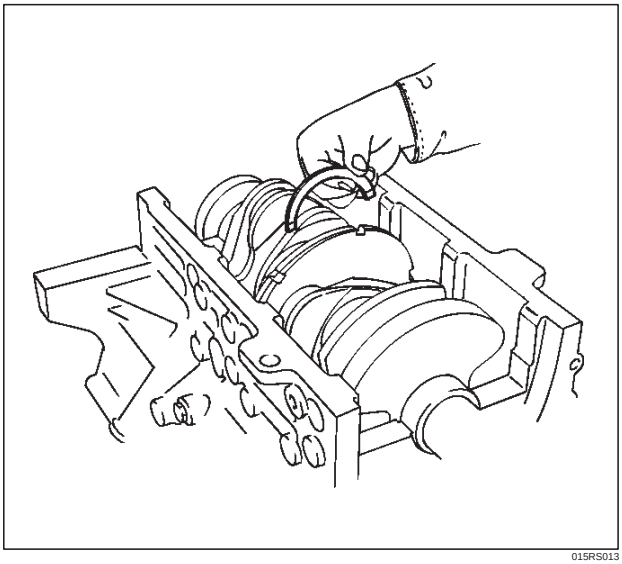

015RS013

3. Install rear oil seal retainer.
   - Remove oil on cylinder block and retainer fitting surface.
   - Apply sealant (TB1207B or equivalent) to retainer fitting surface as shown in illustration.
   - The oil seal retainer must be installed within 5 minutes after sealant application before the sealant hardens.

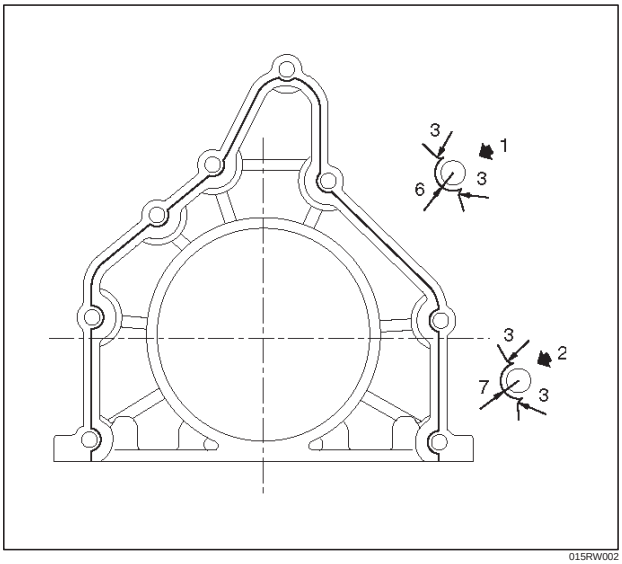

015RW002

Legend

(1) Around Bolt Holes
(2) Around Dowel Pin

Downloaded from www.Manualslib.com manuals search engine

- Apply engine oil to oil seal lip and align a dowel pin hole in the cylinder block with that in the retainer.
- Tighten retainer fixing bolts to the specified torque.

Torque: 25 N·m (18.4 lb ft)

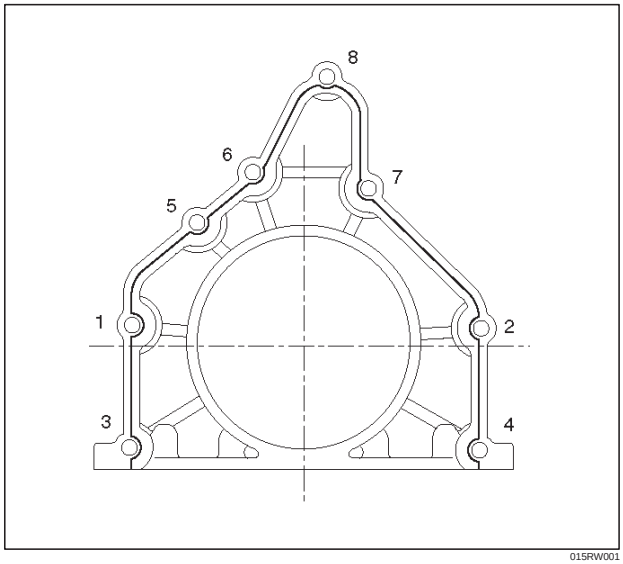

015RW001

4. Install flywheel
   1. Thoroughly clean and remove the oil from the threads of crankshaft.
   2. Remove the oil from the crankshaft and flywheel mounting faces.
   3. Mount the flywheel on the crankshaft and then install the washer.
   4. Holding the crankshaft stationary, tighten the flywheel bolts in the order shown.

Torque: 54 N·m (40 lb ft)

NOTE: Do not reuse the bolts and do not apply oil or thread lock to the bolts.

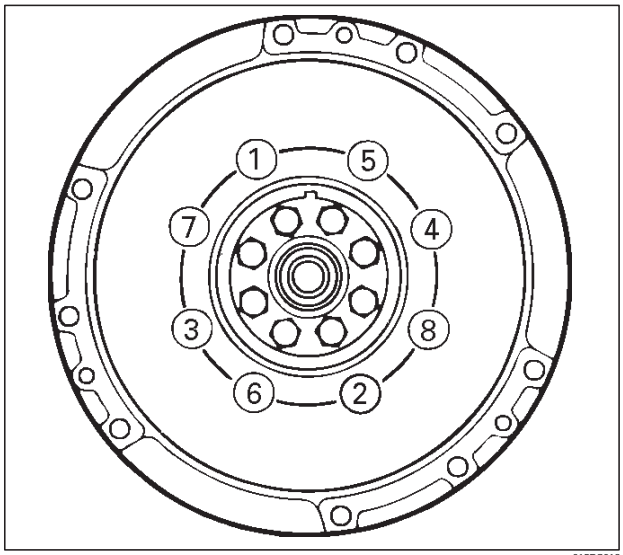

015RS018

5. Install piston and connecting rod assembly.
   - Apply engine oil to the cylinder bores, the connecting rod bearings and the crankshaft pins.

NOTE: Do not apply engine oil to the bearing back faces.

- Check to see that the piston ring end gaps are correctly positioned.

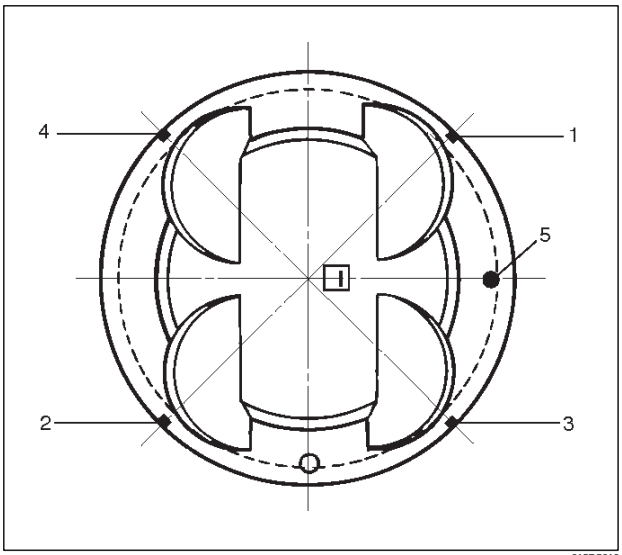

015RS019

Legend

(1) No.1 Compression Ring
(2) No.2 Compression Ring
(3) Oil Ring Side Rail Upper
(4) Oil Ring Side Rail Lower
(5) Piston Front Mark

- Insert the piston/connecting rod assemblies into each cylinder with the piston ring compressor.
- The front marks (1) must be facing the front of the engine.

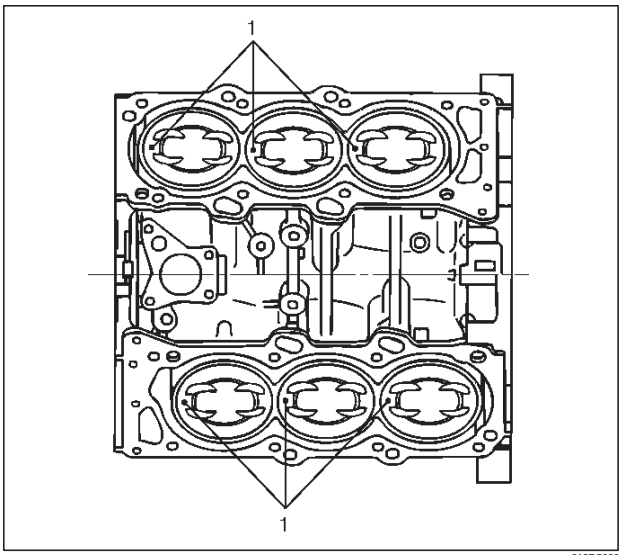

015RS020

Downloaded from www.Manualslib.com manuals search engine

6. Install oil gallery and tighten the bolts in 2 steps in the order shown.

   1st step : 29 N·m (22 lb ft)

   2nd step : 55˚~ 65˚

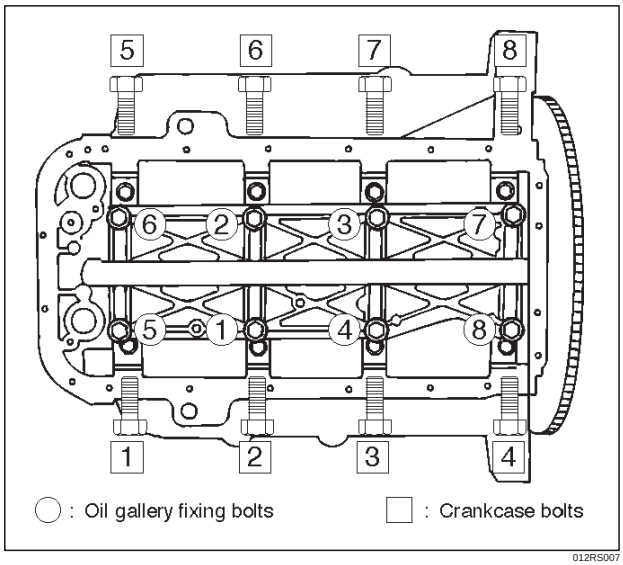

012RS007

7. Install cylinder block side bolts (1) and tighten crankcase bolts in sequence shown in the illustration.

   Torque : 39 N·m (29 lb ft)

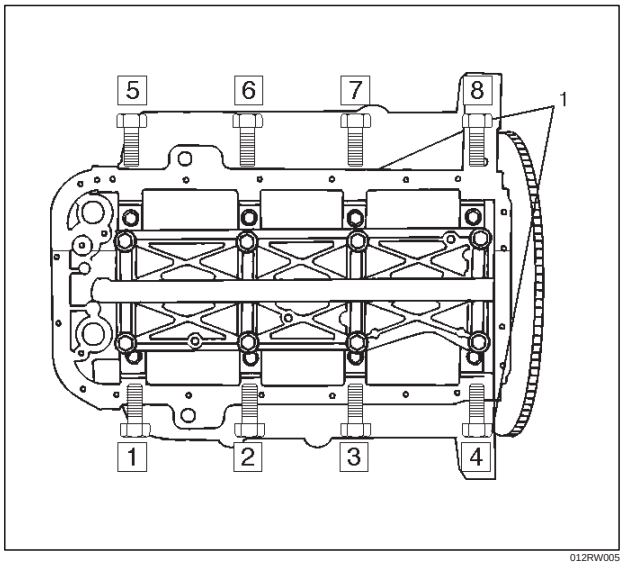

012RW005

8. Install oil pump assembly. Refer to “Oil Pump” in this manual.
9. Install oil strainer and O-ring.
10. Install oil pipe and O-ring.
11. Install crankcase with oil pan.
    1. Completely remove all residual sealant, lubricant and moisture from the sealing surfaces. The surfaces must be perfectly dry.
    2. Apply a correct width bead of sealant (TB– 1207C or its equivalent) to the contact surfaces of the crankcase. There must be no gaps in the bead.
    3. The oil pan must be installed within 5 minutes after sealant application to prevent premature hardening of sealant.
    4. Tighten the bolts and nuts to the specified torque.

    Torque : 10 N·m (89 lb in)

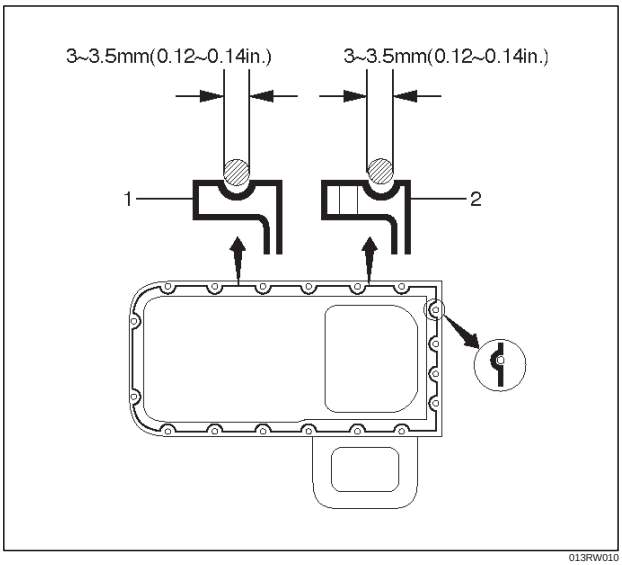

013RW010

Legend

(1) Portion Between Both Holes
(2) Bolt Hole Portions

12. Install cylinder head gasket.
13. Install cylinder head assembly. Refer to “Cylinder Head” in this manual.

Downloaded from www.Manualslib.com manuals search engine

Main Data and Specification

General Specification

Item	Specifications
	6VE1
Engine type, number of cylinders and arrangement	Water cooled, four cycle V6
Form of combustion chamber	Pent roof type
Valve mechanism	4-Cams, 4-Valves, DOHC Gear & Belt Drive
Cylinder liner type	Casted in cylinder drive
Total piston displacement	3494 cc
Cylinder bore x stroke	93.4mm x 85.0mm (3.677 in x 3.346 in)
Compression ratio	9.1 : 1
Compression pressure at 300rpm	14.0 Kg/cm^2
Engine idling speed rpm	Non adjustable (750)
Valve clearance	Intake: 0.28 mm (0.11 in)
	Exhaust: 0.30mm (0.12in)
Oil capacity	5.3 liters
Ignition timing	Non adjustable (20° BTDC at idle rpm)
Spark plug	K16PR–P11, PK16PR11, RC10PYP4
Plug gap	1.0 mm–1.1 mm(0.0394 in – 0.0433 in)

Downloaded from www.Manualslib.com manuals search engine

Torque Specifications

Ignition coil, Spark plug, Crankshaft position sensor and Under cover

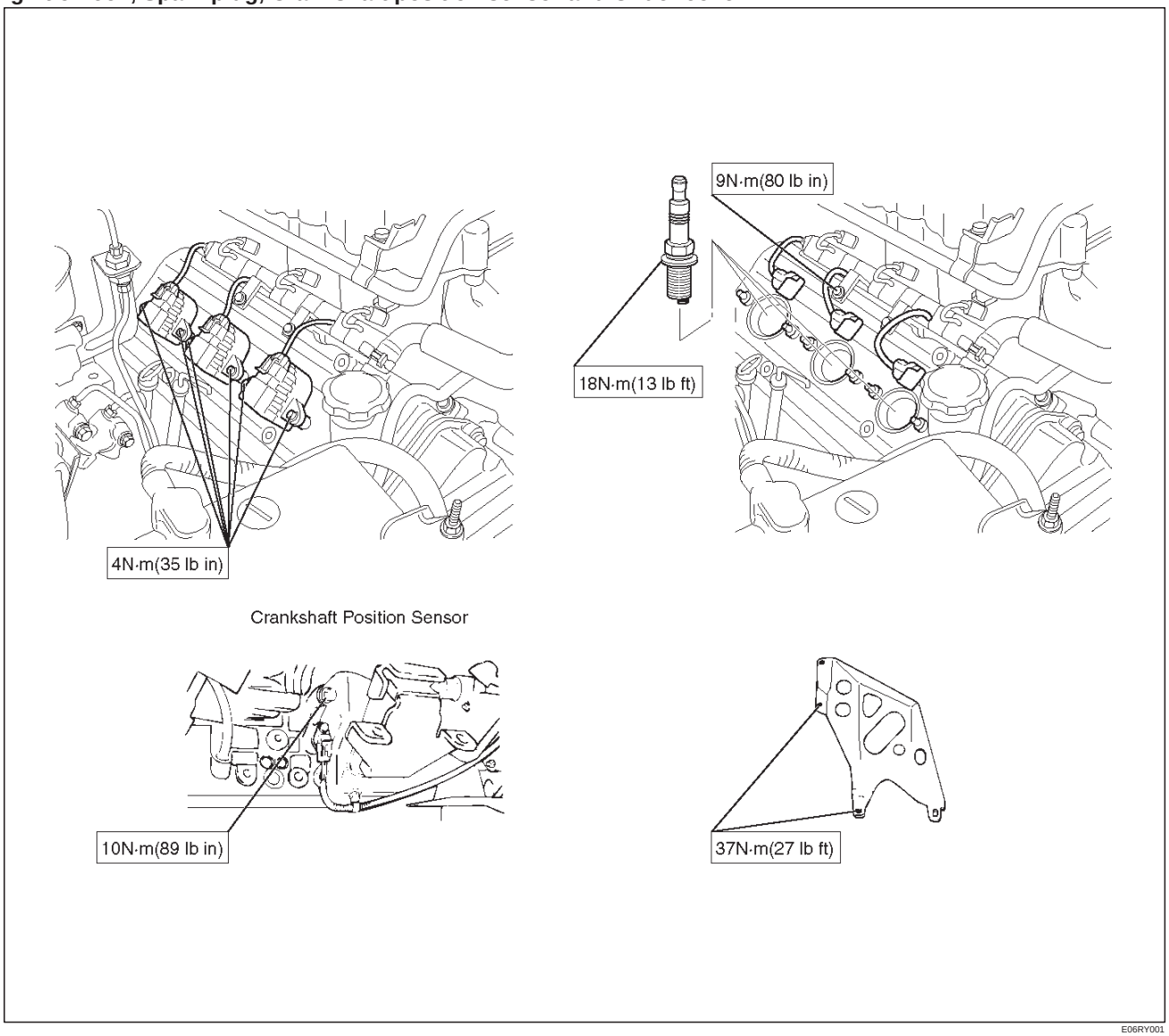

E06RY001

Downloaded from www.Manualslib.com manuals search engine

Cylinder head cover, Cylinder head, Camshaft bearing cap, Common chamber, EGR valve and EGR pipe, Ion sensing module

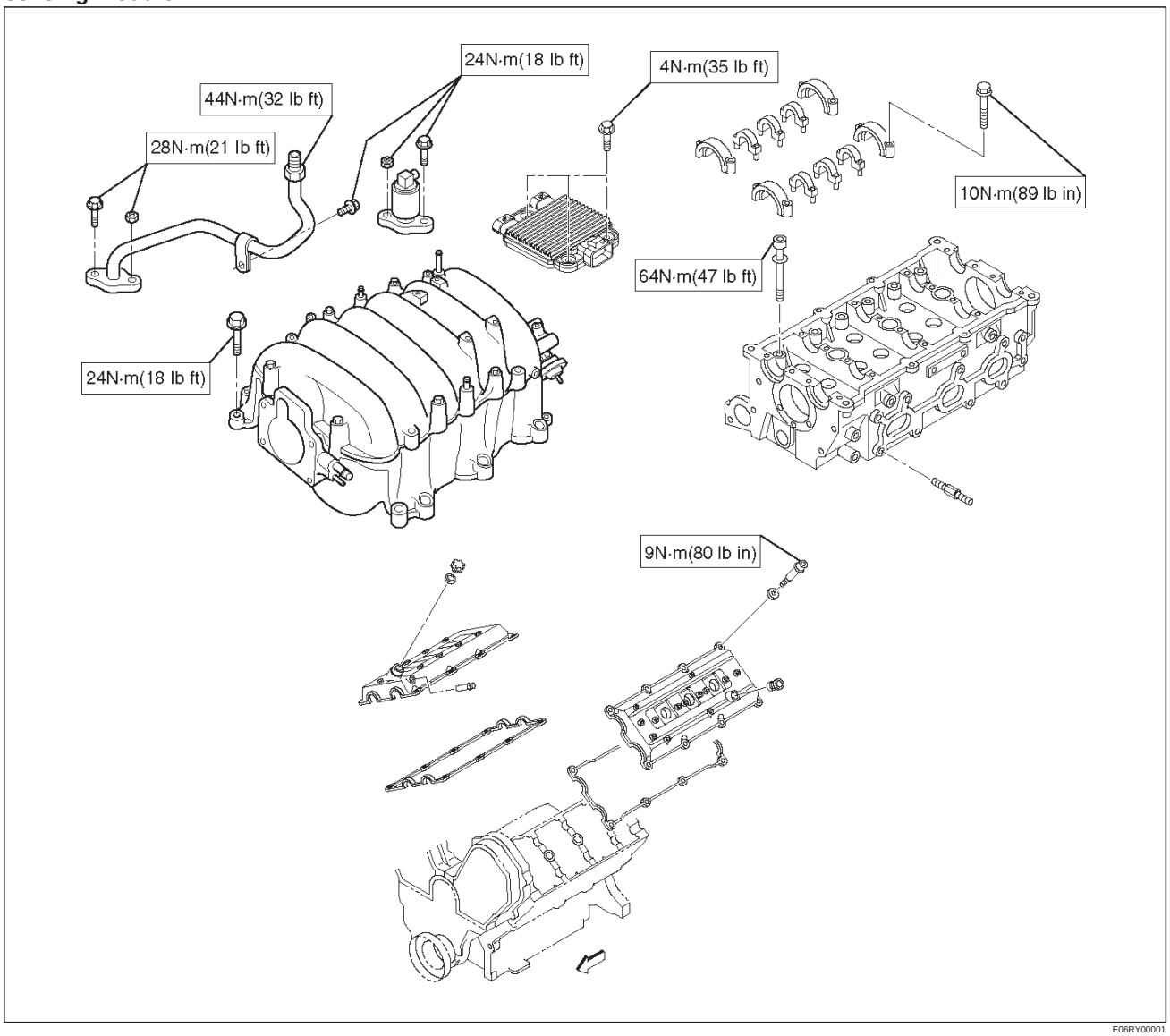

E06RY00001

Downloaded from www.Manualslib.com manuals search engine

Crankshaft main bearing, Flywheel, Crankcase, Oil pan, Timing belt tensioner, Timing pulley, Timing belt cover, Oil pump, Oil gallery, Oil strainer and Water pump

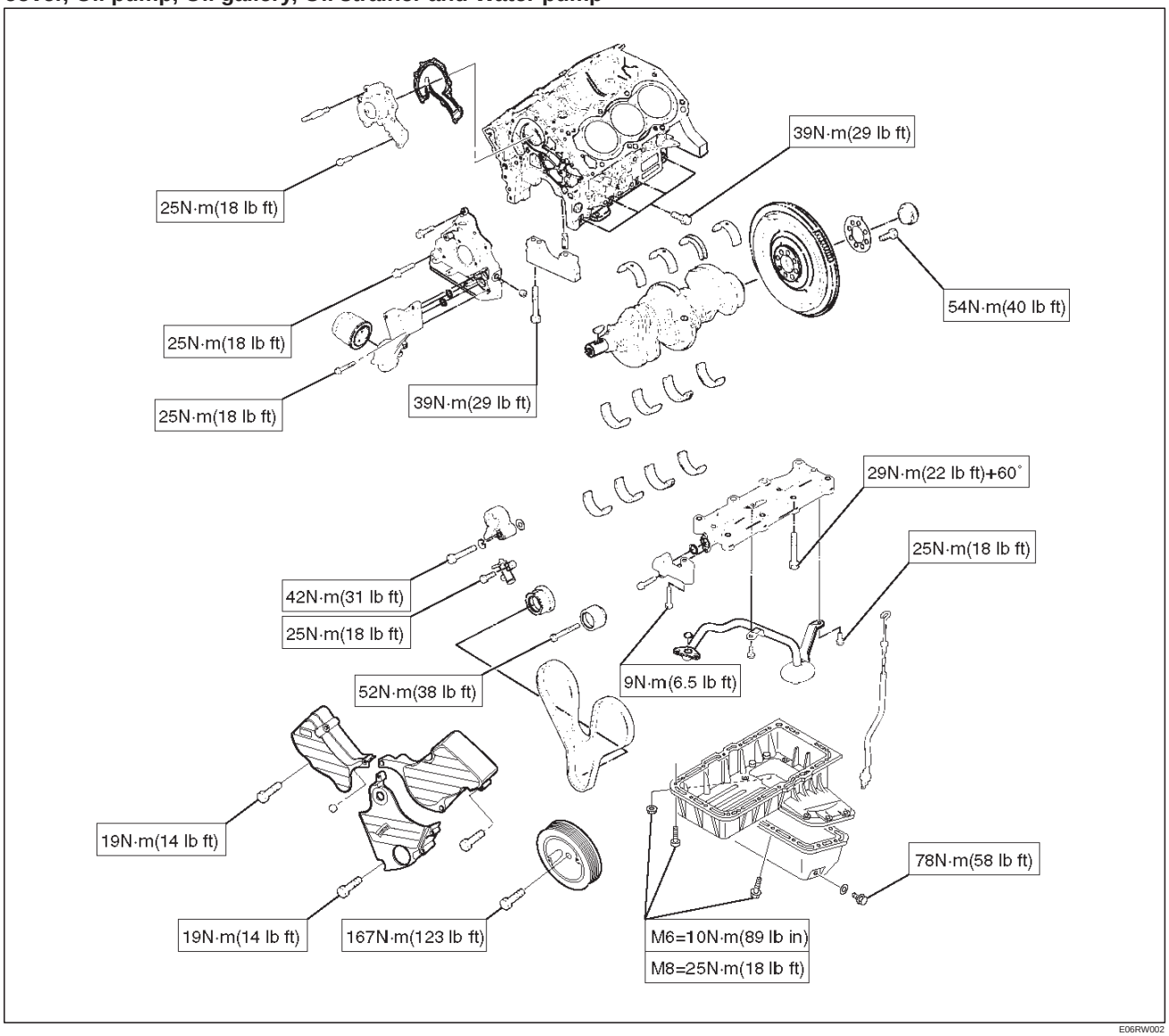

E06RW002

Downloaded from www.Manualslib.com manuals search engine

Connecting rod and Water pump

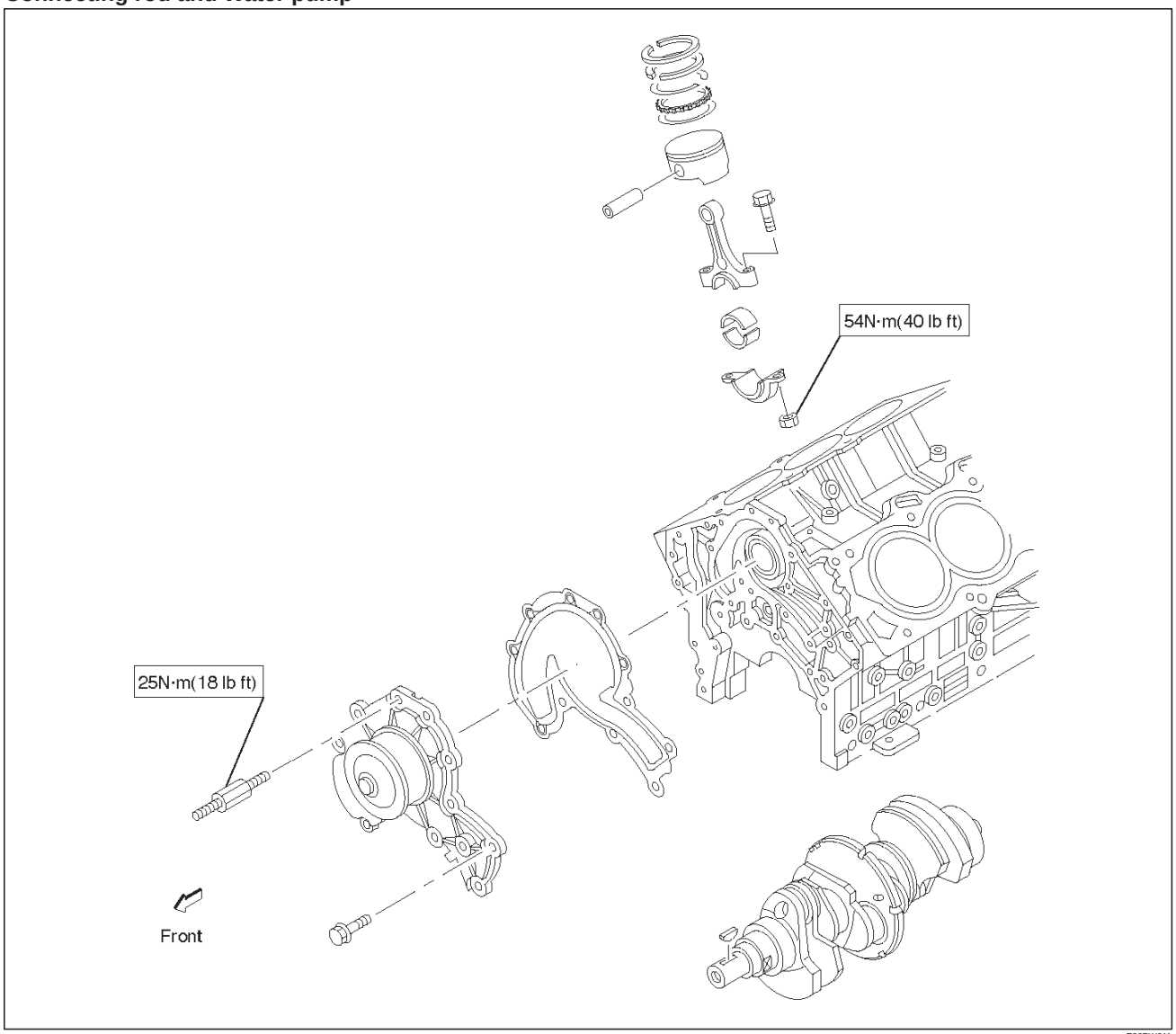

E06RW011

Downloaded from www.Manualslib.com manuals search engine

Engine mount

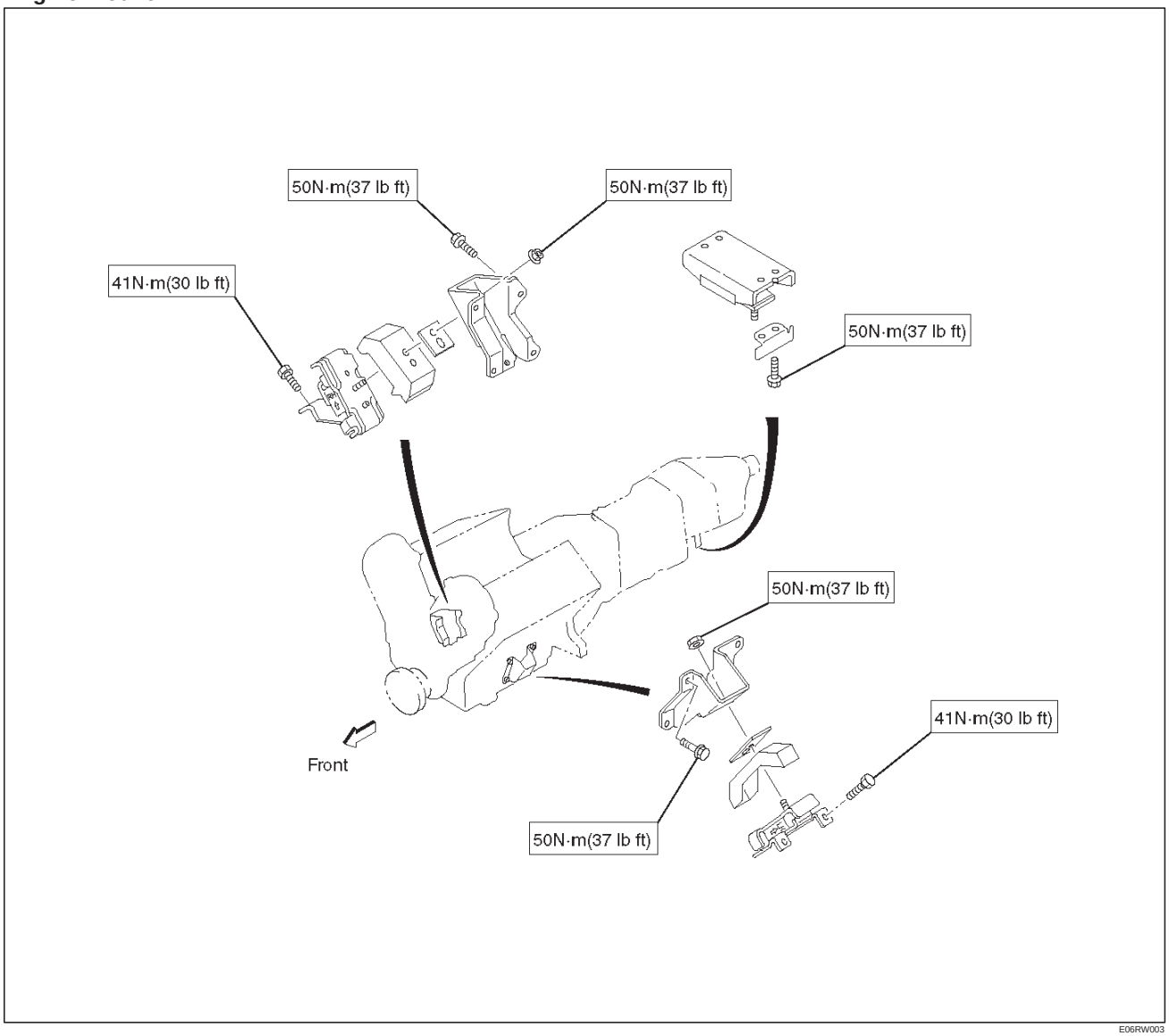

E06RW003

Downloaded from www.Manualslib.com manuals search engine

Special Tool

ILLUSTRATION	TOOL NO. TOOL NAME
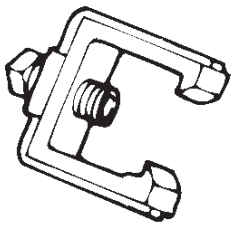 901RT033	**J–21687–02** Remover; tie rod end
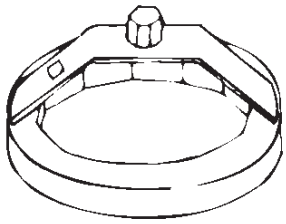 901RT034	**J–36390** Wrench; Oil filter
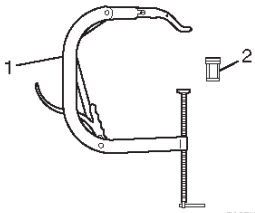 F06RW002	**J–8062** Compressor; Valve spring (1) **J–42898** Adapter; Compressor, Valve spring (2)
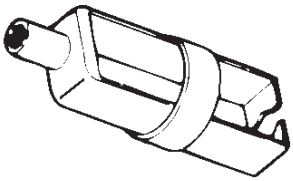 901RT036	**J–37281** Remover; Oil controller
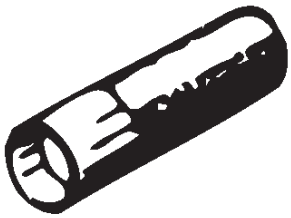 901RT037	**J–38537** Installer; Oil controller
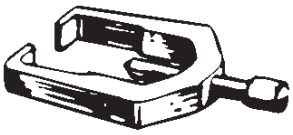 901RT038	**J–29107** Universal pitman arm puller

ILLUSTRATION	TOOL NO. TOOL NAME
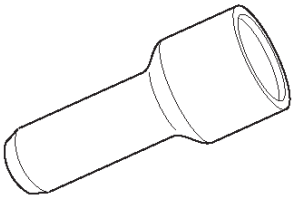 901RW171	**J–42985** Installer; Camshaft oil seal
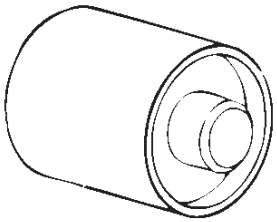 901RT040	**J–39206** Installer; Pilot bearing
901RT041	**J–8614–01** Holder; Crankshaft
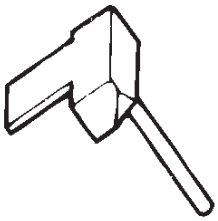 901RT042	**J–37228** Seal cutter
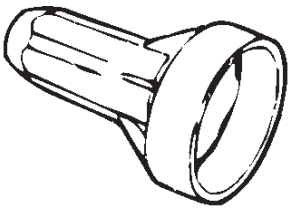 901RT043	**J–39201** Installer; Real oil seal
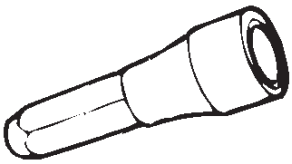 901RT044	**J–39202** Installer; Oil pump oil seal

Downloaded from www.Manualslib.com manuals search engine

ILLUSTRATION	**TOOL NO.** TOOL NAME
	J–24239–1 Cylinder head bolt wrench
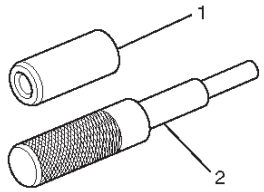	**J–42899** Replacer; Valve guide (1, 2) **J–42687** Installer; Valve guide (1) **J–37985–1** Remover; Valve guide (2)
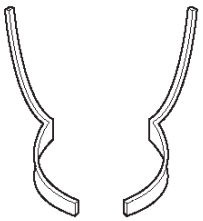	**J–42689** Adjusting Tool: Valve clearance
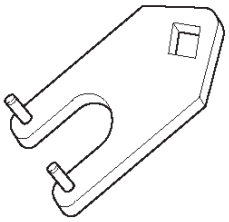	**J–42686** Lever; Gear spring
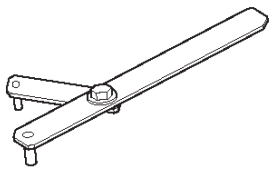	**J–43041** Holder; Universal

Downloaded from www.Manualslib.com manuals search engine

TROOPER

ENGINE

ENGINE COOLING

CONTENTS

Service Precaution 6B–1
General Description 6B–2
Diagnosis 6B–5
Draining and Refilling Cooling System 6B–6
Water Pump 6B–7
Water Pump and Associated Parts 6B–7
Removal 6B–7
Inspection 6B–7
Installation 6B–7
Thermostat 6B–8
Thermostat and Associated Parts 6B–8
Removal 6B–8
Inspection 6B–8
Installation 6B–8
Radiator 6B–9
Radiator and Associated Parts 6B–9
Removal 6B–9
Inspection 6B–10
Installation 6B–11
Drive Belt and Cooling Fan 6B–12
Drive Belt and Associated Parts 6B–12
Inspection 6B–12
Installation 6B–12
Main Data and Specifications 6B–13
Special Tool 6B–14

Service Precaution

WARNING: THIS VEHICLE HAS A SUPPLEMENTAL RESTRAINT SYSTEM (SRS). REFER TO THE SRS COMPONENT AND WIRING LOCATION VIEW IN ORDER TO DETERMINE WHETHER YOU ARE PERFORMING SERVICE ON OR NEAR THE SRS COMPONENTS OR THE SRS WIRING. WHEN YOU ARE PERFORMING SERVICE ON OR NEAR THE SRS COMPONENTS OR THE SRS WIRING, REFER TO THE SRS SERVICE INFORMATION. FAILURE TO FOLLOW WARNINGS COULD RESULT IN POSSIBLE AIR BAG DEPLOYMENT, PERSONAL INJURY, OR OTHERWISE UNNEEDED SRS SYSTEM REPAIRS.

CAUTION: Always use the correct fastener in the proper location. When you replace a fastener, use ONLY the exact part number for that application. ISUZU will call out those fasteners that require a replacement after removal. ISUZU will also call out the fasteners that require thread lockers or thread sealant. UNLESS OTHERWISE SPECIFIED, do not use supplemental coatings (Paints, greases, or other corrosion inhibitors) on threaded fasteners or fastener joint interfaces. Generally, such coatings adversely affect the fastener torque and the joint clamping force, and may damage the fastener. When you install fasteners, use the correct tightening sequence and specifications. Following these instructions can help you avoid damage to parts and systems.

Downloaded from www.Manualslib.com manuals search engine

General Description

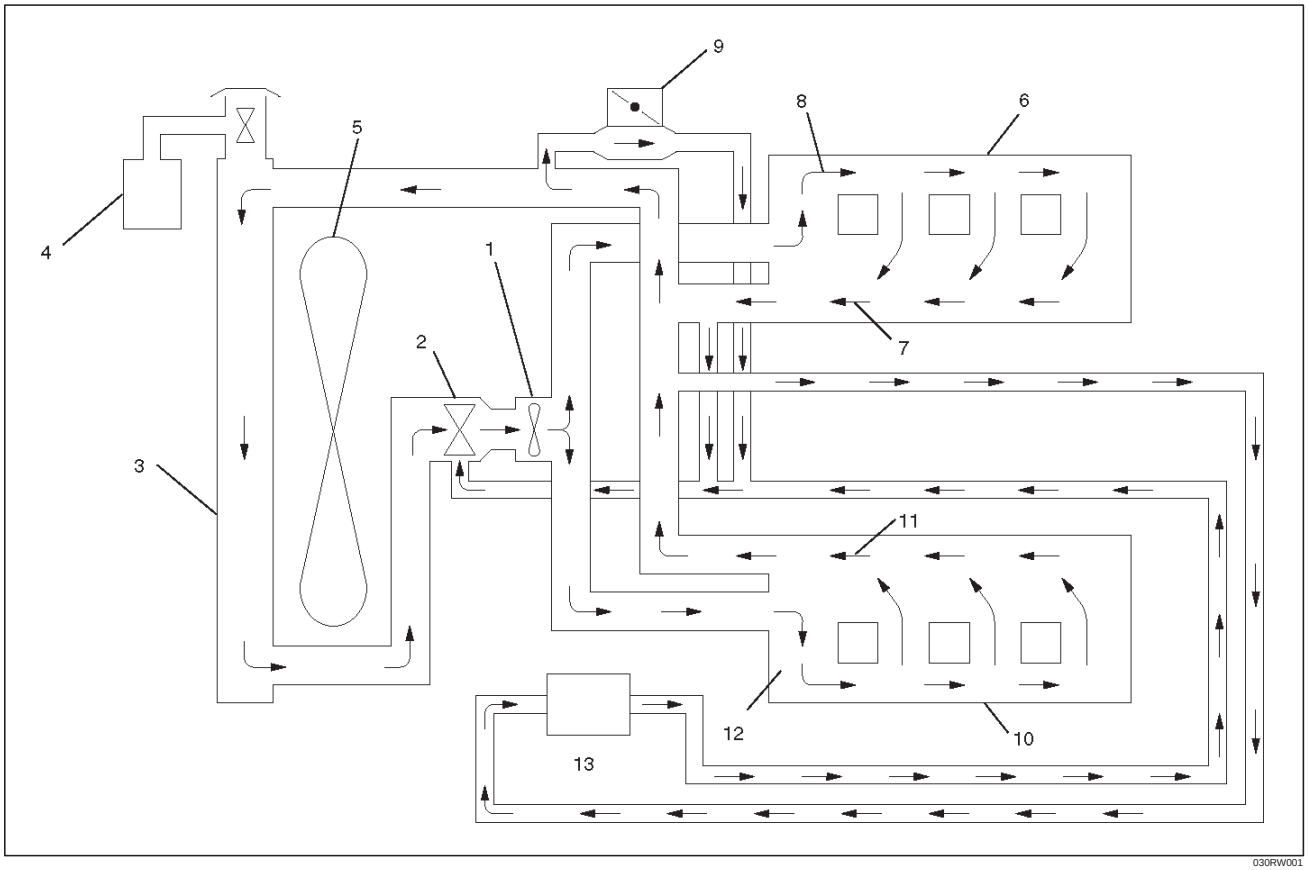

030RW001

Legend

(1) Water Pump
(2) Thermostat
(3) Radiator
(4) Reserve Tank
(5) Cooling Fan
(6) Cylinder Block
(7) Cylinder Head
(8) Right Bank
(9) Throttle Body
(10) Cylinder Block
(11) Cylinder Head
(12) Left Bank
(13) Heater

The cooling system is a pressurized Engine Coolant (EC) forced circulation type which consists of a water pump, thermostat cooling fan, radiator and other components. The automatic transmission fluid is cooled by the EC in radiator.

Water Pump

The EC pump is a centrifugal impeller type and is driven by a timing belt.

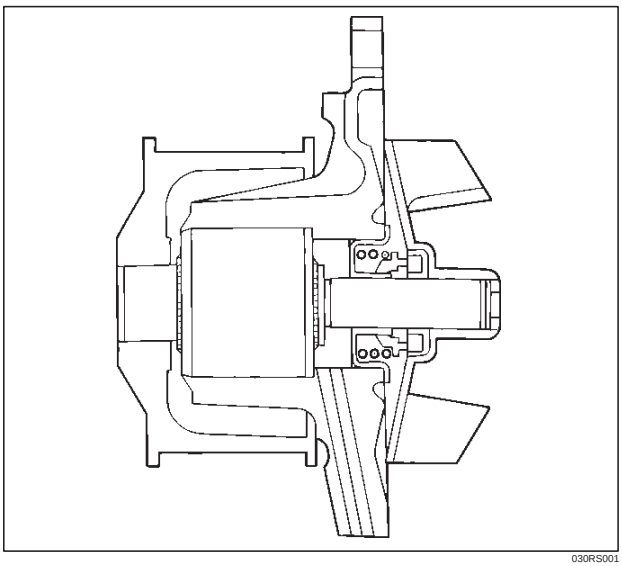

030RS001

Downloaded from www.Manualslib.com manuals search engine

Thermostat

The thermostat is a wax pellet type with a air hole(1) and is installed in the thermostat housing.

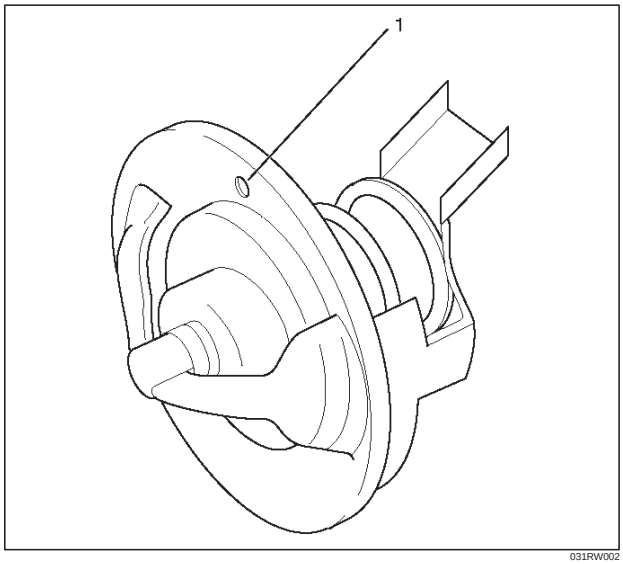

031RW002

Radiator

The radiator is a tube type with corrugated fins. In order to raise the boiling point of the coolant, the radiator is fitted with a cap in which the valve is operated at 88.2 ~ 117.6 kPa (12.8 ~ 17.0 psi) pressure. (No oil cooler provided for M/T)

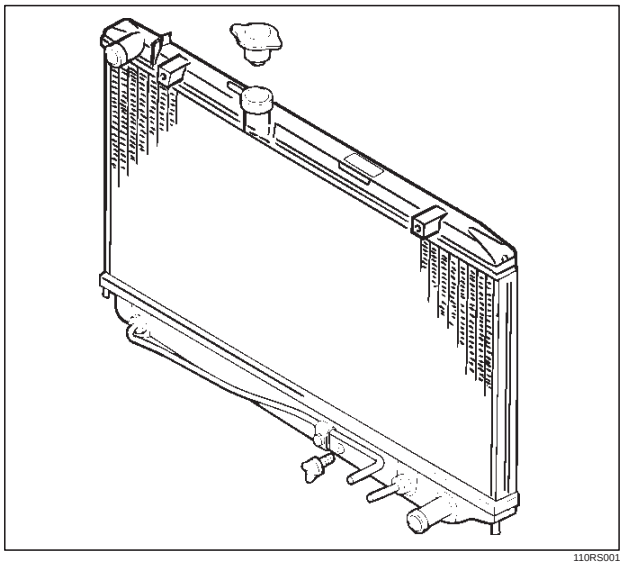

110RS001

Anti Freeze Solution

- Relation between the mixing ratio and freezing temperature of the EC varies with the ratio of anti–freeze solution in water. Proper mixing ratio can be determined by referring to the chart. Supplemental inhibitors or additives claiming to increase cooling capability that have not been specifically approved by Isuzu are not recommended for addition to the cooling system.
- Calculating mixing ratio

$$\text{Mixing ratio} = \frac{\text{Antifreeze solution (Lit/gal.)}}{\text{Antifreeze solution (Lit/gal.)} + \text{Water (Lit/gal.)}}$$

F06RW005

NOTE: Antifreeze solution + Water = Total cooling system capacity.

- **Total Cooling System Capacity**
- **M/T 8.8Lit (2.32Us gal)**
- **A/T 8.4Lit (2.22Us gal)**

Downloaded from www.Manualslib.com manuals search engine

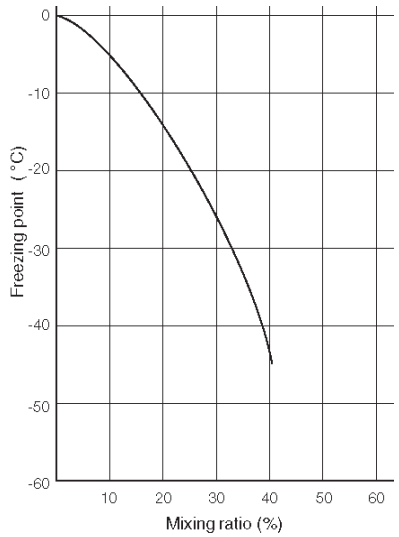

B06RW002

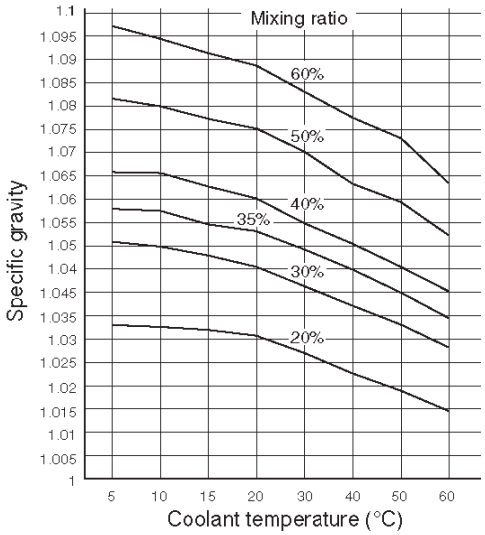

B06RW003

- Mixing ratio

  Check the specific gravity of engine coolant in the cooling system temperature ranges from 0˚C to 50˚C using a suction type hydrometer, then determine the density of the engine coolant by referring to the table.

NOTE:

1. Even in the areas where the atmospheric temperature is higher than 0˚C, be sure not to use antifreeze solution at a mixing ratio lower than 20% so that the inside of the engine may not be corroded.
2. If antifreeze solution is used at a mixing ratio higher than 60%, the specific heat of the coolant falls and the engine may be overheated. Moreover, antifreeze performance drop and the coolant may be frozen. The density of the solution must be adjusted as occasion calls.

Antifreeze solution lower than 20% may not have sufficient anticorrosive performance, and therefore, please never fail to adjust as occasion demands within the range of 20% to 60%.

Downloaded from www.Manualslib.com manuals search engine

Diagnosis

Engine Cooling Trouble

Condition	Possible cause	Correction
Engine overheating	Low Engine Coolant level	Replenish
	Incorrect fan installed	Replace
	Thermo meter unit faulty	Replace
	Faulty thermostat	Replace
	Faulty Engine Coolant temperature sensor	Repair or replace
	Clogged radiator	Clean or replace
	Faulty radiator cap	Replace
	Low engine oil level or use of improper engine oil	Replenish or change oil
	Clogged exhaust system	Clean exhaust system or replace faulty parts
	Faulty Throttle Position sensor	Replace throttle valve assembly
	Open or shorted Throttle Position sensor circuit	Repair or replace
	Damaged cylinder head gasket	Replace
Engine overcooling	Faulty thermostat	Replace
Engine slow to warm–up	Faulty thermostat	Replace
	Thermo unit faulty	Replace

Downloaded from www.Manualslib.com manuals search engine

Draining and Refilling Cooling System

Before draining the cooling system, inspect the system and perform any necessary service to ensure that it is clean, does not leak and is in proper working order. The engine coolant (EC) level should be between the “MIN” and “MAX” lines of reserve tank when the engine is cold. If low, check for leakage and add EC up to the “MAX” line. There should not be any excessive deposit of rust or scales around the radiator cap or radiator filler hole, and the EC should also be free from oil.
Replace the EC if excessively dirty.

1. Completely drain the cooling system by opening the drain plug (2) at the bottom of the radiator.

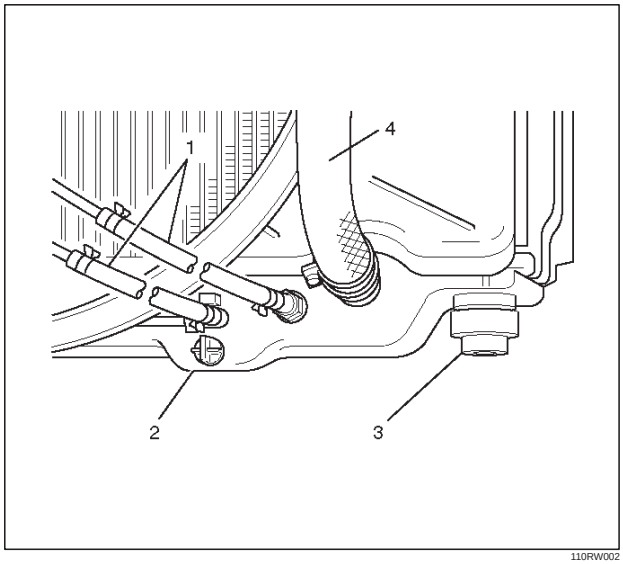

110RW002

2. Remove the radiator cap.

WARNING: TO AVOID THE DANGER OF BEING BURNED, DO NOT REMOVE THE CAP WHILE THE ENGINE AND RADIATOR ARE STILL HOT. SCALDING FLUID AND STEAM CAN BE BLOWN OUT UNDER PRESSURE.

3. Disconnect all hoses from the EC reserve tank.
   Scrub and clean the inside of the reserve tank with soap and water. Flush it well with clean water, then drain it. Install the reserve tank and hoses.
4. Refill the cooling system with the EC using a solution that is at least 50 percent antifreeze but no more than 70 percent antifreeze.
5. Fill the radiator to the base of the filler neck.
   Fill the EC reserve tank to “MAX” line when the engine is cold.
6. Block the drive wheels and firmly apply the parking brake. Shift an automatic transmission to “P” (Park) or a manual transmission to neutral.
7. Remove the radiator cap. Start the engine and warm it up at 2,500 ~ 3,000 rpm for about 30 minutes.
8. When the air comes out from the radiator filler neck and the EC level has gone down, replenish with the EC. Repeat this procedure until the EC level does not go down. Then stop the engine and install the radiator cap. Let the engine cool down.
9. After the engine has cooled, replenish with EC up to the “MAX” line of the reserve tank.
10. Start the engine. With the engine running at 3,000 rpm, make sure there is no running water sound from the heater core (behind the center console).
11. If the running water sound is heard, repeat steps 8 to 10.

Downloaded from www.Manualslib.com manuals search engine

Water Pump

Water Pump and Associated Parts

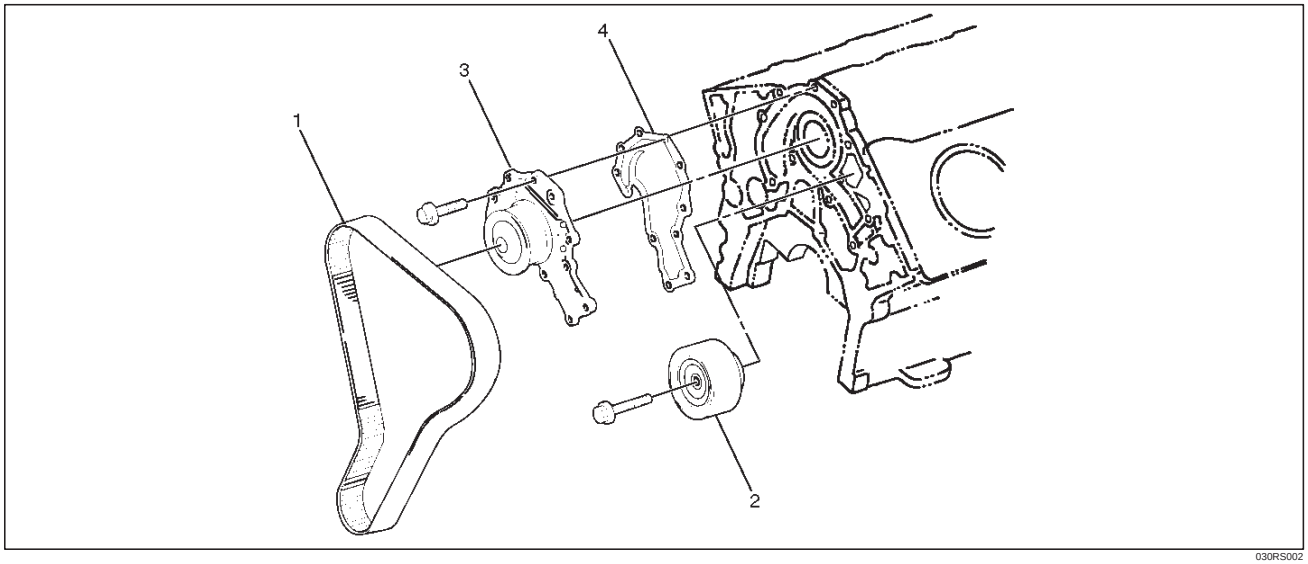

030RS002

Legend
(1) Timing Belt
(2) Idle Pulley
(3) Water Pump Assembly
(4) Gasket

Removal

1. Disconnect battery ground cable.
2. Drain coolant.
3. Radiator hose (on inlet pipe side).
4. Remove timing belt. Refer to “Timing Belt” in this manual.
5. Remove Idle pulley.
6. Remove water pump assembly.
7. Remove gasket.

Inspection

Make necessary repair and parts replacement if extreme wear or damage is found during inspection. Should any of the following problems occur, the entire water pump assembly must be replaced:

- Crack in the water pump body
- EC leakage from the seal unit
- Play or abnormal noise in the bearing
- Cracks or corrosion in the impeller.

Installation

1. Install gasket, clean the mating surface of gasket before installation.
2. Install water pump assembly and tighten bolts to the specified torque.

Torque: 25 N·m (18 lb ft)

- Tightening order
  The tightening order are in the illustrate.

NOTE: To prevent the oil leakage, apply the LOCTITE 262 or an equivalent, to the arrow marked fixing bolt thread.

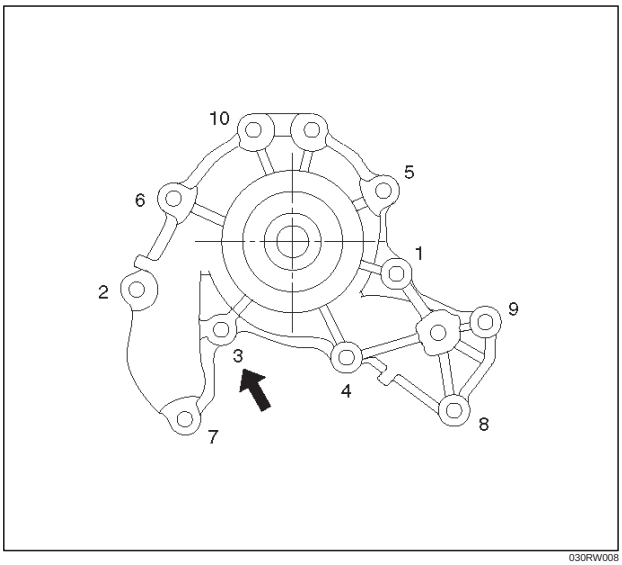

030RW008

Downloaded from www.Manualslib.com manuals search engine

3. Idle pulley
   - Install idle pulley and tighten bolt to the specified torque.

   Torque: 52 N·m (38 lb ft)

4. Timing belt
   - Install timing belt. Refer to timing belt installation step in “Timing Belt” in this manual.
5. Connect radiator inlet hose and replenish EC.
6. Connect battery ground cable.

Thermostat

Thermostat and Associated Parts

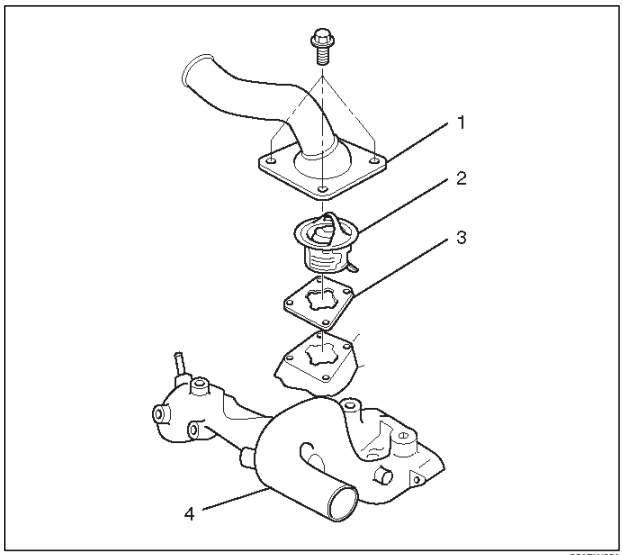

031RW001

Legend

(1) Thermostat Housing
(2) Thermostat
(3) Outlet Pipe

Removal

1. Disconnect battery ground cable.
2. Drain engine coolant from the radiator and engine.
3. Disconnect radiator hose from the inlet pipe.
4. Remove thermostat housing.
5. Remove thermostat(2).

Inspection

Suspend the thermostat in a water–filled container using thin wire. Place a thermometer next to the thermostat. Do not directly heat the thermostat.
Gradually increase the water temperature. Stir the water so that the entire water is same temperature.

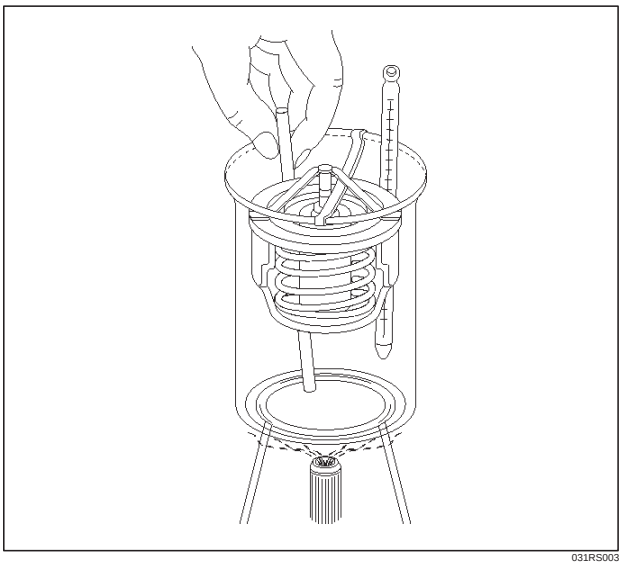

031RS003

Confirm the temperature when the valve first begins to open.

Valve opening temperature 74.5C ~ 78.5˚C (166.1˚F ~ 173.3˚F)

Confirm the temperature when the valve is fully opened.

Valve full open temperature and lift More than 8.5mm (0.33 in) at 90˚C (194˚F)

Make necessary repair and parts replacement if extreme wear or damage is found during inspection.

Installation

1. Install thermostat into the outlet pipe(4) making sure that the air hole is in the up position.
2. Install thermostat housing and tighten bolts to the specified torque.

   Torque: 25 N·m (18 lb ft)

3. Installation rubber hose.
4. Replenish engine coolant (EC).
5. Start engine and check for EC leakage.

Downloaded from www.Manualslib.com manuals search engine

Radiator

Radiator and Associated Parts

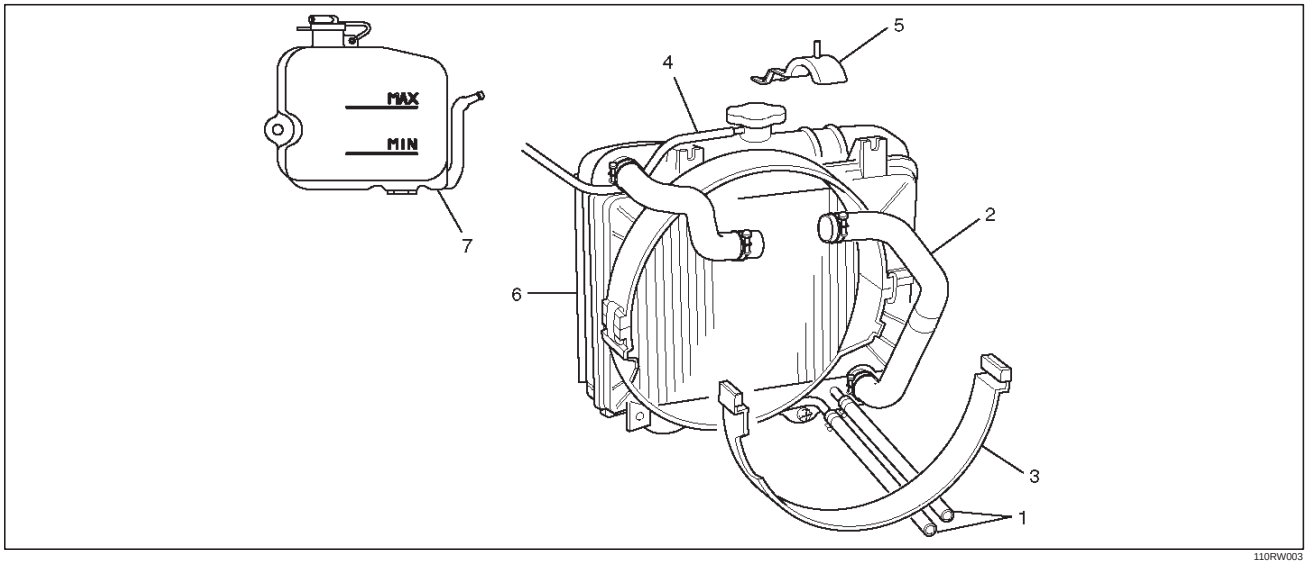

110RW003

Legend

(1) Oil Cooler Hose For Automatic Transmission
(2) Radiator Hose
(3) Fan Guide, Lower
(4) Reserve Tank Hose
(5) Bracket
(6) Radiator Assembly
(7) Reserve Tank

Removal

1. Disconnect battery ground cable.
2. Loosen a drain plug(2) to drain EC.
3. Disconnect oil cooler hose(1) on automatic transmission (A/T).
4. Disconnect radiator inlet hose and outlet hose from the engine.

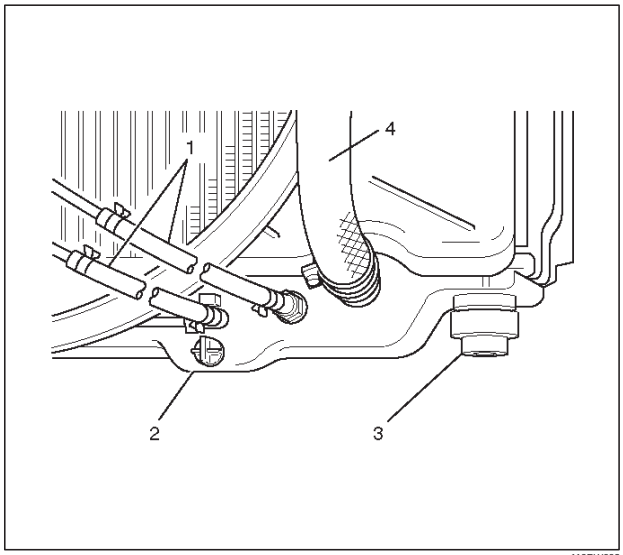

110RW002

5. Remove fan guide(1), clips(3) on both sides and the bottom lock, then remove lower fan guide(3) with fan shroud(4).

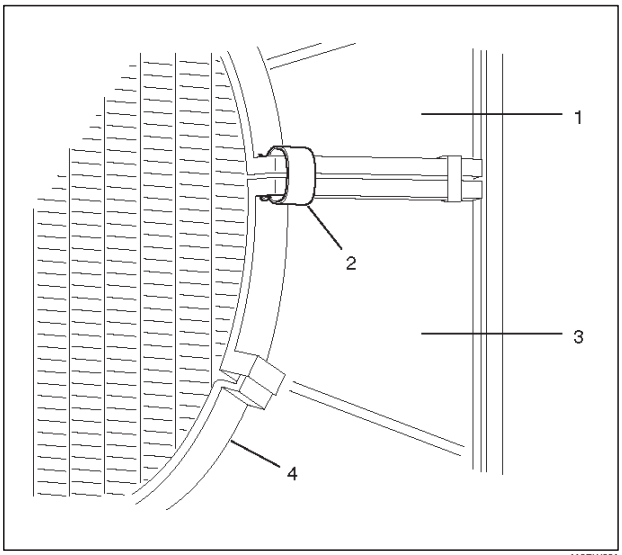

110RW001

Downloaded from www.Manualslib.com manuals search engine

6. Disconnect the reserve tank hose(4) from radiator.
7. Remove bracket(5).

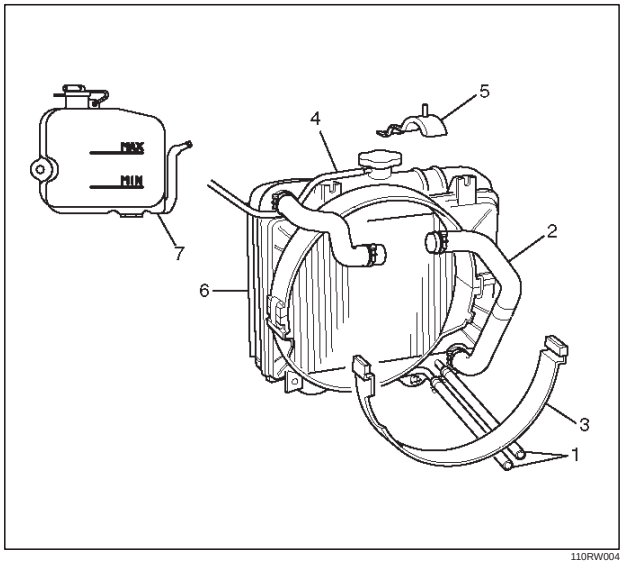

110RW004

8. Lift up and remove the radiator assembly with hose, taking care not to damage the radiator core with a fan blade.
9. Remove rubber cushions on both sides at the bottom.

Inspection

Radiator Cap

Measure the valve opening pressure of the pressurizing valve with a radiator filler cap tester.
Replace the cap if the valve opening pressure is outside the standard range.

Valve opening pressure kPa (psi) 88.3 ~ 117.7 (12.8 ~17.1)

Cap tester: J–24460–01
Adapter: J–33984–A
Check the condition of the vacuum valve in the center of the valve seat side of the cap. If considerable rust or dirt is found, or if the valve seat cannot be moved by hand, clean or replace the cap.

Valve opening vacuum kPa (psi) 1.96 ~ 4.91 (0.28 ~ 0.71)

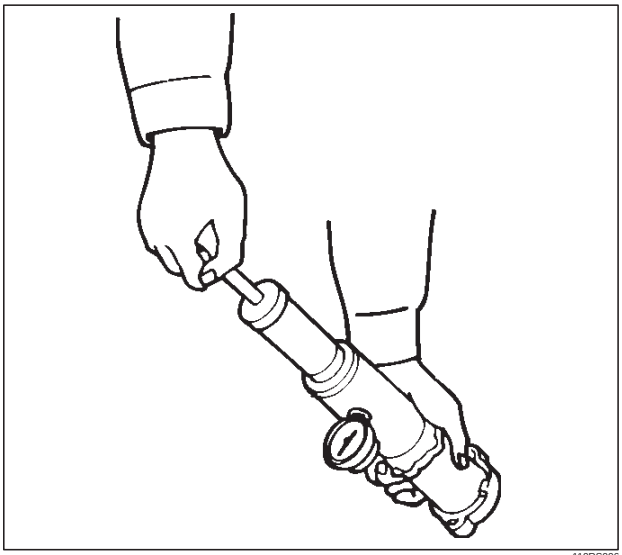

110RS006

Radiator Core

1. A bent fin may result in reduced ventilation and overheating may occur. All bent fins must be straightened. Pay close attention to the base of the fin when it is being straightened.
2. Remove all dust, bugs and other foreign material.

Flushing the Radiator

Thoroughly wash the inside of the radiator and the engine coolant passages with cold water and mild detergent. Remove all signs of scale and rust.

Cooling System Leakage Check

Use a radiator cap tester to force air into the radiator through the filler neck at the specified pressure of 196 kPa (28.5 psi) with a cap tester:

- Leakage from the radiator
- Leakage from the coolant pump
- Leakage from the water hoses
- Check the rubber hoses for swelling.

Downloaded from www.Manualslib.com manuals search engine

Cap tester: J–24460–01
Adapter: J–33984–A

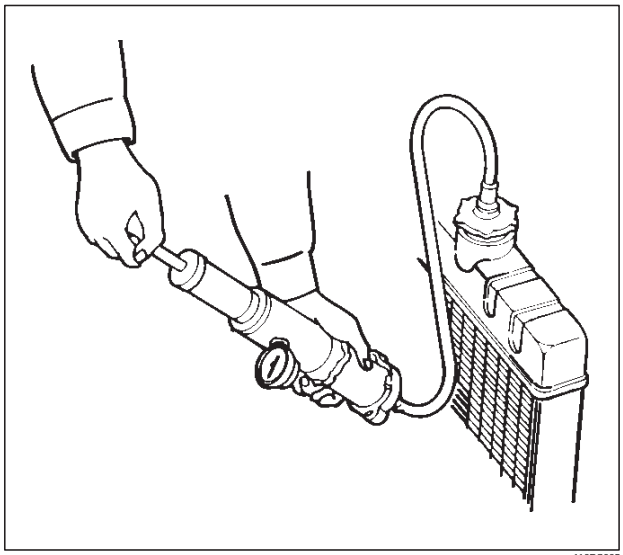

110RS005

Installation

1. Install rubber cushions on both sides of radiator bottom.
2. Install radiator assembly with hose, taking care not to damage the radiator core with a fan blade.
3. Install bracket (6) and support the radiator upper tank with the bracket (5) and secure the radiator.
4. Connect reserve tank hose (4).
5. Install lower fan guide (3).
6. Connect radiator inlet hose and outlet hose to the engine.
7. Connect oil cooler hose (1) to automatic transmission.

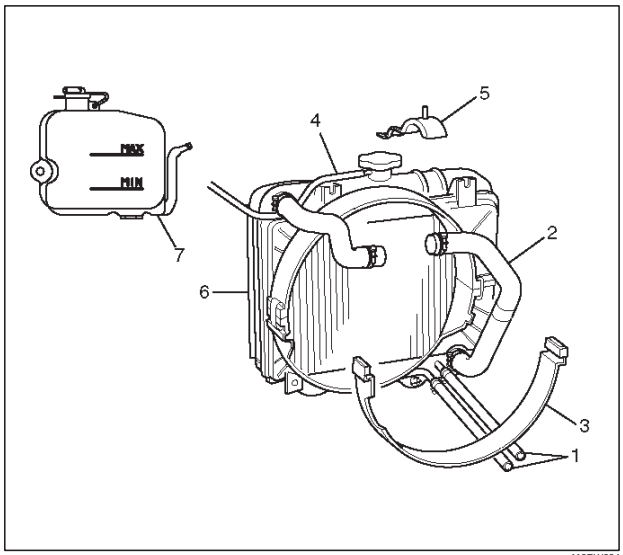

110RW004

8. Connect battery ground cable.
9. Pour engine coolant up to filler neck of radiator, and up to MAX mark of reserve tank.

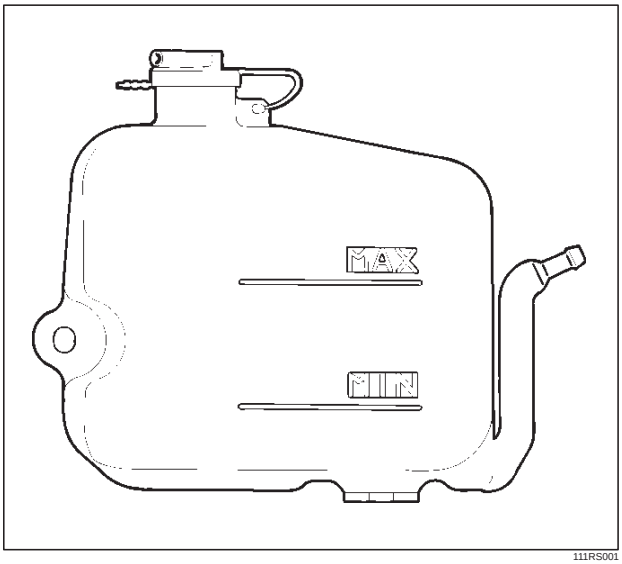

111RS001

Important operation (in case of 100% engine coolant change) procedure for filling with engine coolant.

Engine Coolant Filling Up Procedure

1. Make sure that the engine is cool.

WARNING: WHEN THE COOLANT IS HEATED TO A HIGH TEMPERATURE, BE SURE NOT TO LOOSEN OR REMOVE THE RADIATOR CAP. OTHERWISE YOU MIGHT GET SCALDED BY HOT VAPOR OR BOILING WATER. TO OPEN THE RADIATOR CAP, PUT A PIECE OF THICK CLOTH ON THE CAP AND LOOSEN THE CAP SLOWLY TO REDUCE THE PRESSURE WHEN THE COOLANT HAS BECOME COOLER.

2. Open radiator cap pour coolant up to filler neck.
3. Pour coolant into reservoir tank up to “MAX” line.
4. Tighten radiator cap and start the engine. After idling for 2 to 3 minutes, stop the engine and reopen radiator cap. If the water level is lower, replenish.
5. After replenish the coolant tighten radiator cap, warm up the engine at about 2000 rpm. Set heater adjustment to the highest temperature position, and let the coolant circulate also into heater water system.
6. Check to see the thermometer, continuously idling 5 minutes and stop the engine.
7. When the engine has been cooled, check filler neck for water level and replenish if required. Should extreme shortage of coolant is found, check the coolant system and reservoir tank hose for leakage.
8. Pour coolant into the reservoir tank up to “MAX” line.

Downloaded from www.Manualslib.com manuals search engine

Drive Belt and Cooling Fan

Drive Belt and Associated Parts

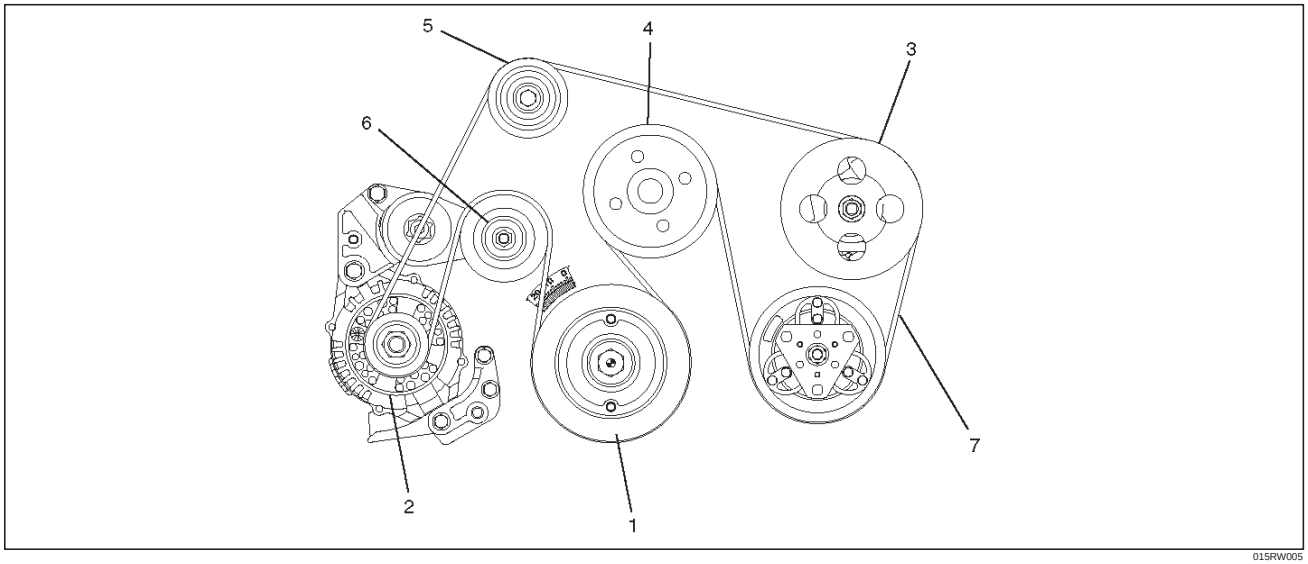

015RW005

Legend

(1) Crankshaft Pulley
(2) Generator
(3) Power Steering Pump
(4) Water Pump and Cooling Fan Pulley
(5) Idle Pulley
(6) Tension Pulley
(7) Drive Belt

The drive belt adjustment is not required as automatic drive belt tensioner is equipped.

Inspection

Check drive belt for wear or damage, and replace with a new one as necessary.

Installation

Install cooling fan assembly and tighten bolts/nuts to the specified torque.

Torque : 22 N·m (16 lb ft) for fan pulley and fan bracket.

Torque : 10 N·m (88.5 lb in) for fan and clutch assembly.

NOTE: Fan belts for 6VE1 Gasoline Engine mounted on 98MY Trooper (UX) have been brought into one. As a result, the rotating direction of a fan belt is opposite to the direction of cooling fan for 92 to 97MY 6VD1 with no interchangeability.

Therefore, incorrect installation of a fan may cause the air for cooling to flow in the opposite direction, this resulting in the poor performance of the air-conditioner and a rise temperature in engine cooling water.

Downloaded from www.Manualslib.com manuals search engine

Main Data and Specifications

General Specifications

	M/T	A/T
Cooling system	Engine coolant forced circulation	
Radiator	(1 tube in row) Tube type corrugated (2 tube in row)	
Heat radiation capacity	68,000 kcal/h	77,000 kcal/h
Heat radiation area	9.445m2 (0.878ft2)	11.21m2 (1.04ft2)
Radiator front area	0.302m2 (0.028ft2)	
Radiator dry weight	39N (8.8lb)	44N (9.9lb)
Radiator cap valve opening pressure	93.3 ~ 122.7kpa (13.5 ~ 17.8psi)	
Engine coolant capacity	2.5lit (2.6U.S q.t.)	2.4lit (16.3U.S q.t.)
Engine coolant pump	Centrifugal impeller type	
Delivery	300 (317) or more	
Pump speed	5000 ± 50 rpm	
Thermostat	Wax pellet type with air hole	
Valve opening temperature	74.5 ~ 78.5˚C (166.1 ~ 173.3˚F)	
Engine coolant total capacity	10.4lit (11.0U.S qt)	10.5lit (11.1U.S qt)

Torque Specifications

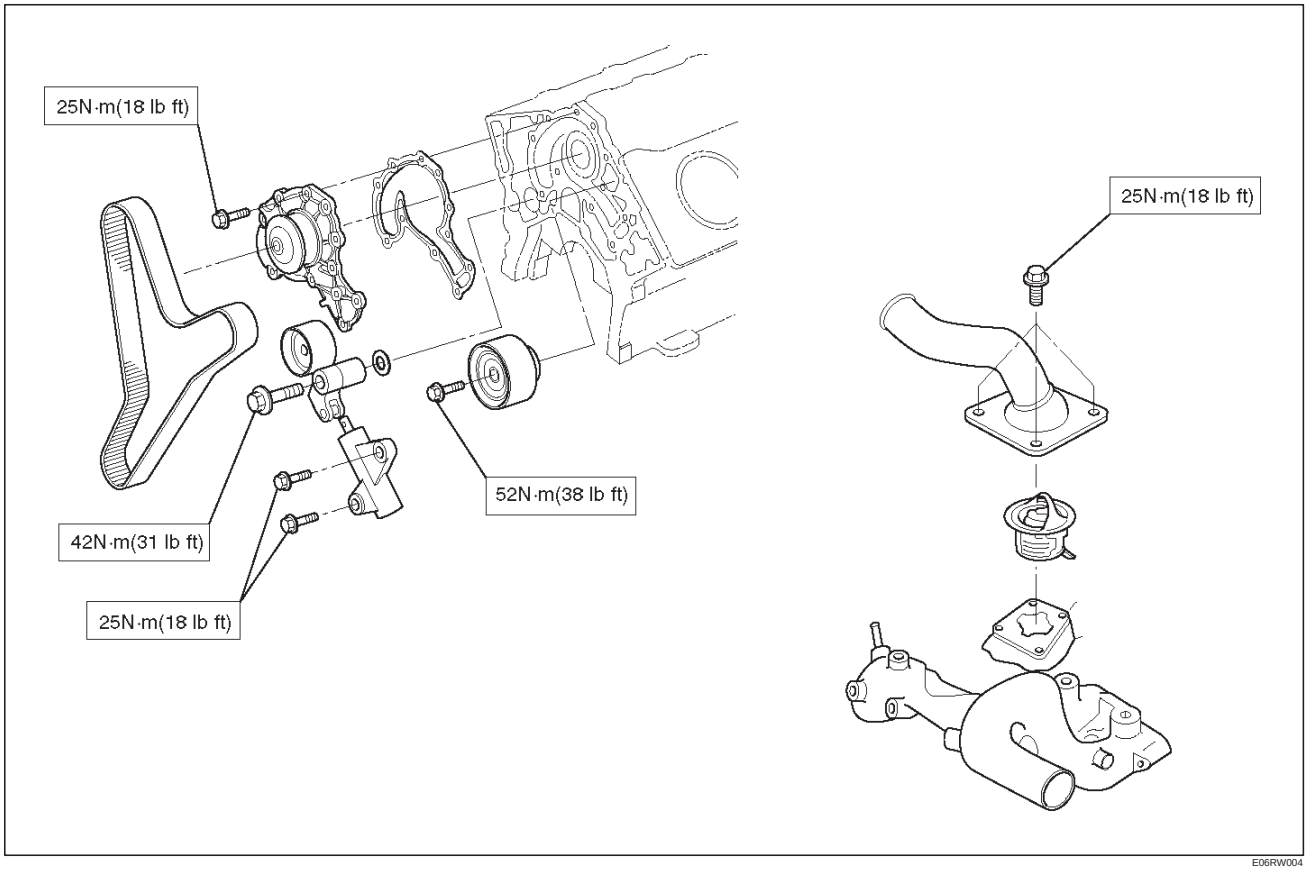

E06RW004

Downloaded from www.Manualslib.com manuals search engine

Special Tool

ILLUSTRATION	**TOOL NO.** TOOL NAME
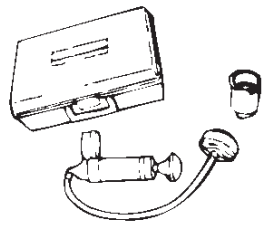	**J–24460–01** Tester; radiator cap
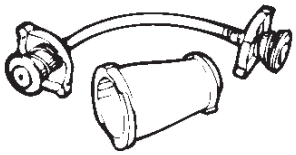	**J–33984–A** Adapter; radiator cap

Downloaded from www.Manualslib.com manuals search engine

TROOPER

ENGINE

ENGINE FUEL

CONTENTS

Service Precaution 6C–1
General Description 6C–2
Fuel Metering 6C–3
Fuel Filter 6C–4
Fuel Filter and Associated Parts 6C–4
Removal 6C–4
Inspection 6C–4
Installation 6C–4
Inspection 6C–5
In–Tank Fuel Filter 6C–5
Fuel Pump Flow Test 6C–5
Fuel Pump 6C–6
Fuel Pump and Associated Parts 6C–6
Removal 6C–6
Installation 6C–6
Fuel Pump Relay 6C–7
General Description 6C–7
Fuel Tank 6C–7
Fuel Tank and Associated Parts 6C–7
Removal 6C–7
Installation 6C–8
Fuel Tube / Quick – Connect Fittings 6C–8
Precautions 6C–8
Cautions During Work 6C–8
Removal 6C–8
Reuse of Quick–Connector 6C–10
Assembling Advice 6C–10
Fuel Gauge Unit 6C–11
Fuel Gauge Unit and Associated Parts . . . 6C–11
Removal 6C–11
Installation 6C–11
Fuel Filler Cap 6C–12
General Description 6C–12
Inspection 6C–12
Main Data and Specifications 6C–12

Service Precaution

WARNING: THIS VEHICLE HAS A SUPPLEMENTAL RESTRAINT SYSTEM (SRS). REFER TO THE SRS COMPONENT AND WIRING LOCATION VIEW IN ORDER TO DETERMINE WHETHER YOU ARE PERFORMING SERVICE ON OR NEAR THE SRS COMPONENTS OR THE SRS WIRING. WHEN YOU ARE PERFORMING SERVICE ON OR NEAR THE SRS COMPONENTS OR THE SRS WIRING, REFER TO THE SRS SERVICE INFORMATION. FAILURE TO FOLLOW WARNINGS COULD RESULT IN POSSIBLE AIR BAG DEPLOYMENT, PERSONAL INJURY, OR OTHERWISE UNNEEDED SRS SYSTEM REPAIRS.

CAUTION: Always use the correct fastener in the proper location. When you replace a fastener, use ONLY the exact part number for that application. ISUZU will call out those fasteners that require a replacement after removal. ISUZU will also call out the fasteners that require thread lockers or thread sealant. UNLESS OTHERWISE SPECIFIED, do not use supplemental coatings (Paints, greases, or other corrosion inhibitors) on threaded fasteners or fastener joint interfaces. Generally, such coatings adversely affect the fastener torque and the joint clamping force, and may damage the fastener. When you install fasteners, use the correct tightening sequence and specifications. Following these instructions can help you avoid damage to parts and systems.

Downloaded from www.Manualslib.com manuals search engine

General Description

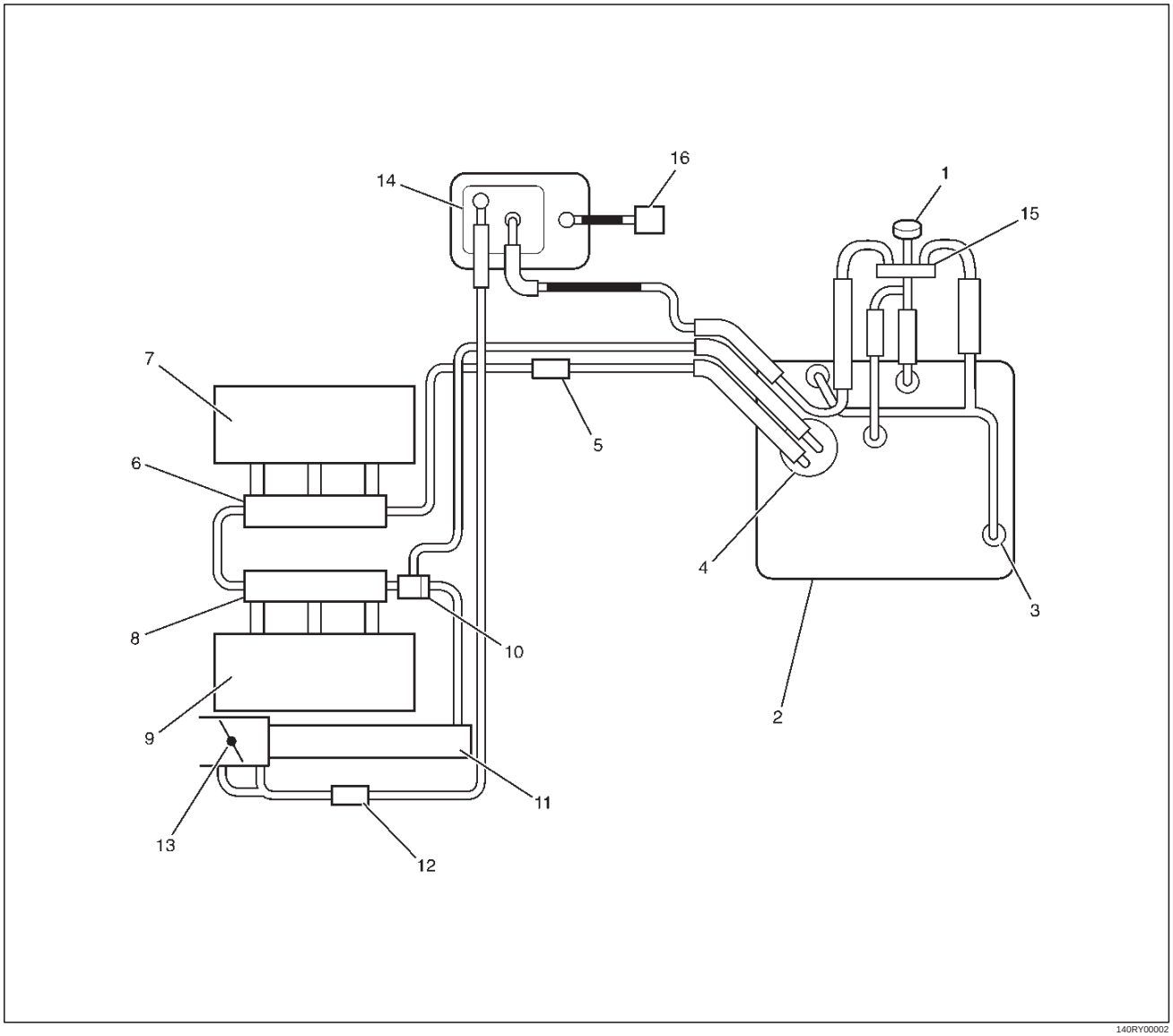

Legend

(1) Fuel Filler Cap
(2) Fuel Tank
(3) Rollover Valve
(4) Fuel Pump (Fuel Level Sending Unit/Fuel Tank Pressure Sensor)
(5) Fuel Filter
(6) Fuel Rail Right
(7) Right Bank
(8) Fuel Rail Left
(9) Left Bank
(10) Fuel Pressure Control Valve
(11) Common Chamber
(12) Duty Solenoid Valve
(13) Throttle Valve
(14) Canister
(15) Evaporation Shut Off Valve
(16) Vent Solenoid Cut Valve

When working on the fuel system, there are several things to keep in mind:

- Any time the fuel system is being worked on, disconnect the negative battery cable except for those tests where battery voltage is required.
- Always keep a dry chemical (Class B) fire extinguisher near the work area.
- Replace all pipes with the same pipe and fittings that were removed.
- Clean and inspect “O” rings. Replace if required.
- Always relieve the line pressure before servicing any fuel system components.
- Do not attempt repairs on the fuel system until you have read the instructions and checked the pictures relating to that repair.

Downloaded from www.Manualslib.com manuals search engine

- Adhere to all Notices and Cautions.

All gasoline engines are designed to use only unleaded gasoline. Unleaded gasoline must be used for proper emission control system operation.

Its use will also minimize spark plug fouling and extend engine oil life. Using leaded gasoline can damage the emission control system and could result in loss of emission warranty coverage.

All cars are equipped with an Evaporative Emission Control System. The purpose of the system is to minimize the escape of fuel vapors to the atmosphere.

Fuel Metering

The Engine Control Module (ECM) is in complete control of this fuel delivery system during normal driving conditions.

The intake manifold function, like that of a diesel, is used only to let air into the engine. The fuel is injected by separate injectors that are mounted over the intake manifold.

The Manifold Absolute Pressure (MAP) sensor measures the changes in the intake manifold pressure which result from engine load and speed changes, which the MAP sensor converts to a voltage output.

This sensor generates the voltage to change corresponding to the flow of the air drawn into the engine. The changing voltage is transformed into an electric signal and provided to the ECM.

With receipt of the signals sent from the MAP sensor, Intake Air Temperature sensor and others, the ECM determines an appropriate fuel injection pulse width feeding such information to the fuel injector valves to effect an appropriate air/fuel ratio.

The Multiport Fuel Injection system utilizes an injection system where the injectors turn on at every crankshaft revolution. The ECM controls the injector on time so that the correct amount of fuel is metered depending on driving conditions.

Two interchangeable “O” rings are used on the injector that must be replaced when the injectors are removed.

The fuel rail is attached to the top of the intake manifold and supplies fuel to all the injectors.

Fuel is recirculated through the rail continually while the engine is running. This removes air and vapors from the fuel as well as keeping the fuel cool during hot weather operation.

The fuel pressure control valve that is mounted on the fuel rail maintains a pressure differential across the injectors under all operating conditions. It is accomplished by controlling the amount of fuel that is recirculated back to the fuel tank based on engine demand.

See Section “Driveability and Emission” for more information and diagnosis.

Downloaded from www.Manualslib.com manuals search engine

Fuel Filter

Fuel Filter and Associated Parts

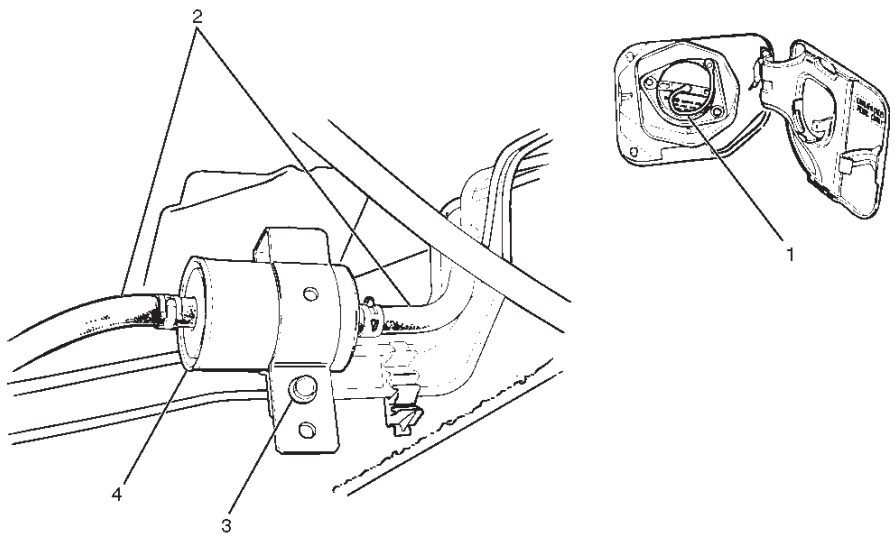

041RW014

Legend

(1) Fuel Filler Cap
(2) Fuel Hose
(3) Fuel Filter Fixing Bolt
(4) Fuel Filter

Removal

CAUTION: When repair to the fuel system has been completed, start engine and check the fuel system for loose connection or leakage. For the fuel system diagnosis, see Section "Driveability and Emission".

1. Disconnect battery ground cable.
2. Remove Fuel filler cap(1).
3. Disconnect fuel hoses(2) from fuel filter on both engine side and fuel tank side.
4. Fuel filter fixing bolt(3).
   - Remove the fuel filter fixing bolt(3) on fuel filter holder.
5. Remove fuel filter(4).

Inspection

1. Replace the fuel filter if the fuel leaks from fuel filter body or if the fuel filter body itself is damaged.
2. Replace the filter if it is clogged with dirt or sediment.
3. Check the drain of receive rubber and if it is clogged with dust, clean it up with air.

Installation

1. Install the fuel filter in the proper direction.
2. Install fuel filter holder fixing bolt.

Downloaded from www.Manualslib.com manuals search engine

3. Connect fuel hoses on engine side(1) and fuel tank side(2).

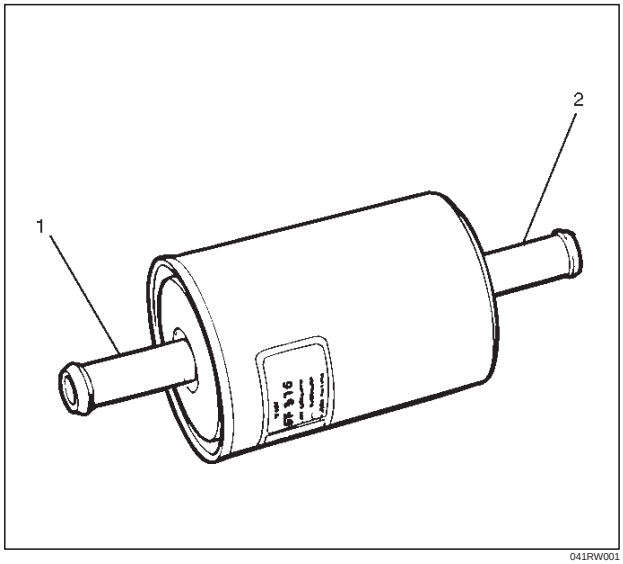

041RW001

4. Install fuel filler cap
5. Connect the battery ground cable.

Inspection

After installation, start engine and check for fuel leakage.

In–Tank Fuel Filter

The filter is located on the lower end of fuel pickup tube in the fuel tank. It prevents dirt from entering the fuel pipe and also stops water unless the filter is completely submerged in the water. It is a self cleaning type, not requiring scheduled maintenance. Excess water and sediment in the tank restricts fuel supply to the engine, resulting in engine stoppage. In such a case, the tank must be cleaned thoroughly.

Fuel Pump Flow Test

If reduction of fuel supply is suspected, perform the following checks:

1. Make sure that there is fuel in the tank.
2. With the engine running, check the fuel feed pipe and hose from fuel tank to injector for evidence of leakage. Retighten, if pipe or hose connection is loose. Also, check pipes and hoses for squashing or clogging.
3. Insert the hose from fuel feed pipe into a clean container, and check for fuel pump flow rate.
4. Connect the pump relay terminals with a jumper wire(1) as shown and start the fuel pump to measure delivery.

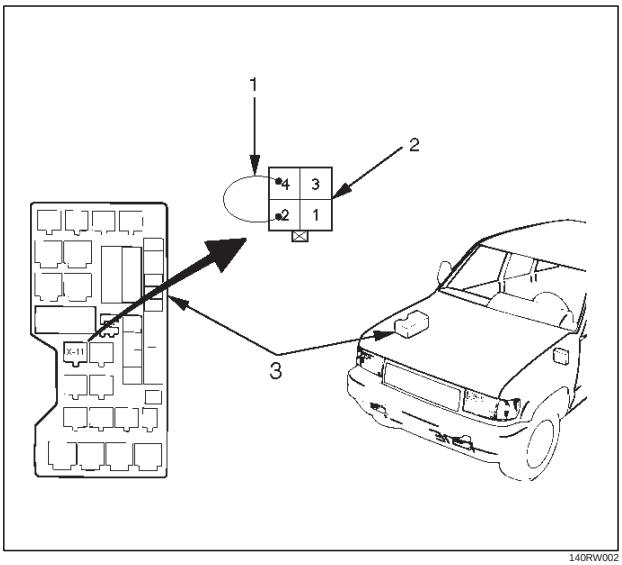

140RW002

CAUTION: Never generate sparks when connecting a jumper wire.

Delivery	Delivery
15 seconds	0.38 liters minimum

If the measure value is out of standard, conduct the pressure test.

Pressure test

For the pressure test to the fuel system, see Section 6E “Fuel Control System”.

Downloaded from www.Manualslib.com manuals search engine

Fuel Pump

Fuel Pump and Associated Parts

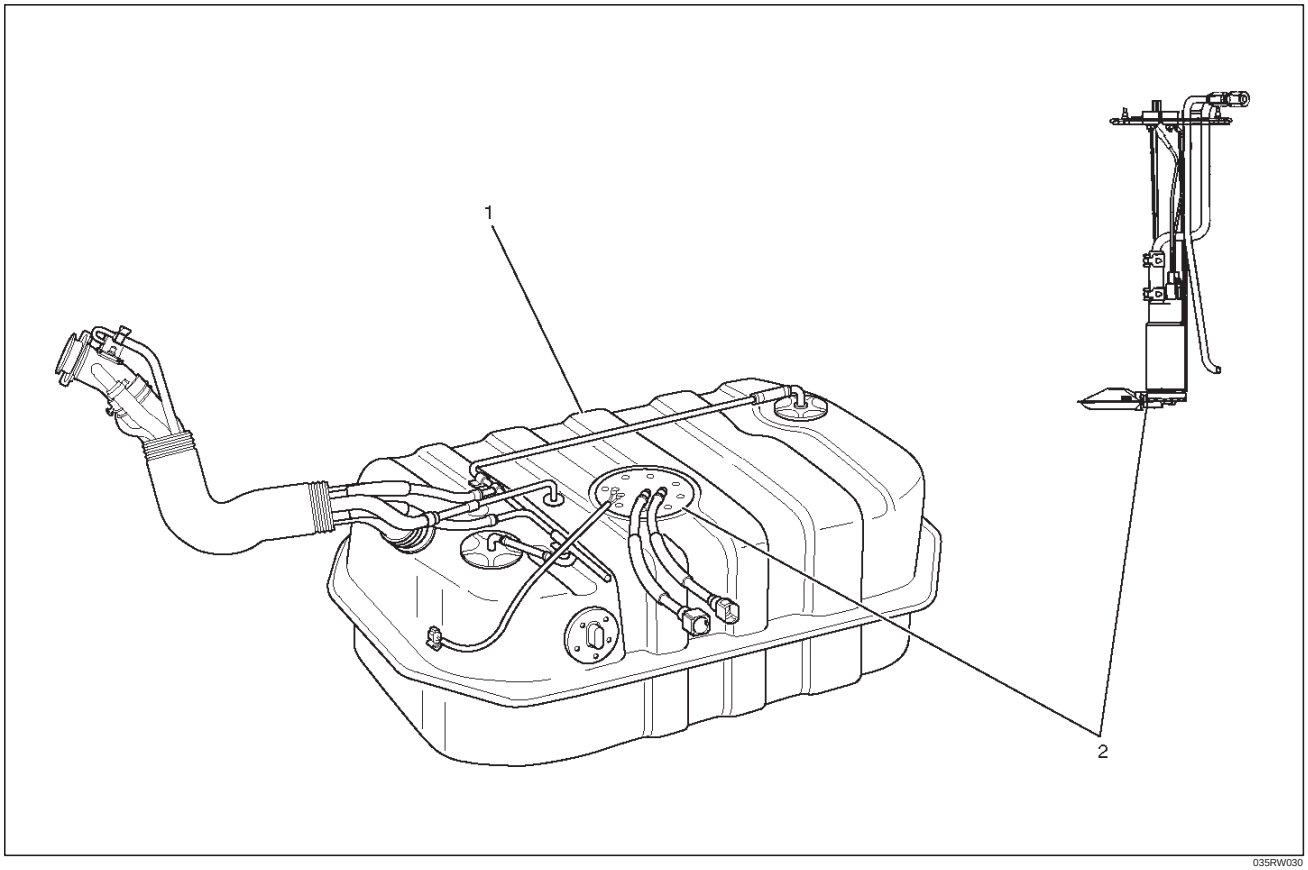

035RW030

Removal

CAUTION: When repair to the fuel system has been completed, start engine and check the fuel system for loose connection or leakage. For the fuel system diagnosis, see Section "Driveability and Emission".

1. Disconnect battery ground cable.
2. Loosen fuel filler cap.
3. Drain fuel.
   Tighten drain plug to the specified torque after draining fuel.

   Torque: 20 N·m (14 lb ft) — M8
4. Remove fuel tank assembly(1). Refer to "Fuel Tank Removal" in this section.
5. Remove fuel pump (FP) assembly(2) fixing screws and remove the FP assembly.

NOTE: After removing FP, cover fuel tank to prevent any dust entering.

Installation

1. Install FP assembly(2).
2. Install fuel tank assembly(1). Refer to "Fuel Tank Installation".
3. Fill the tank with fuel and tighten fuel filler cap.
4. Connect battery ground cable.

Downloaded from www.Manualslib.com manuals search engine

Fuel Pump Relay

General Description

In order to control the FP operation, the FP relay is provided. When the starter switch is turned to “ON” position, the FP relay operates the FP for 2 seconds.

When it is turned to “START” position, the Power Train Control Module (PCM) receives the reference pulse from the Ignition Control Module and it operates the relay, again causing the FP to feed fuel.

Fuel Tank

Fuel Tank and Associated Parts

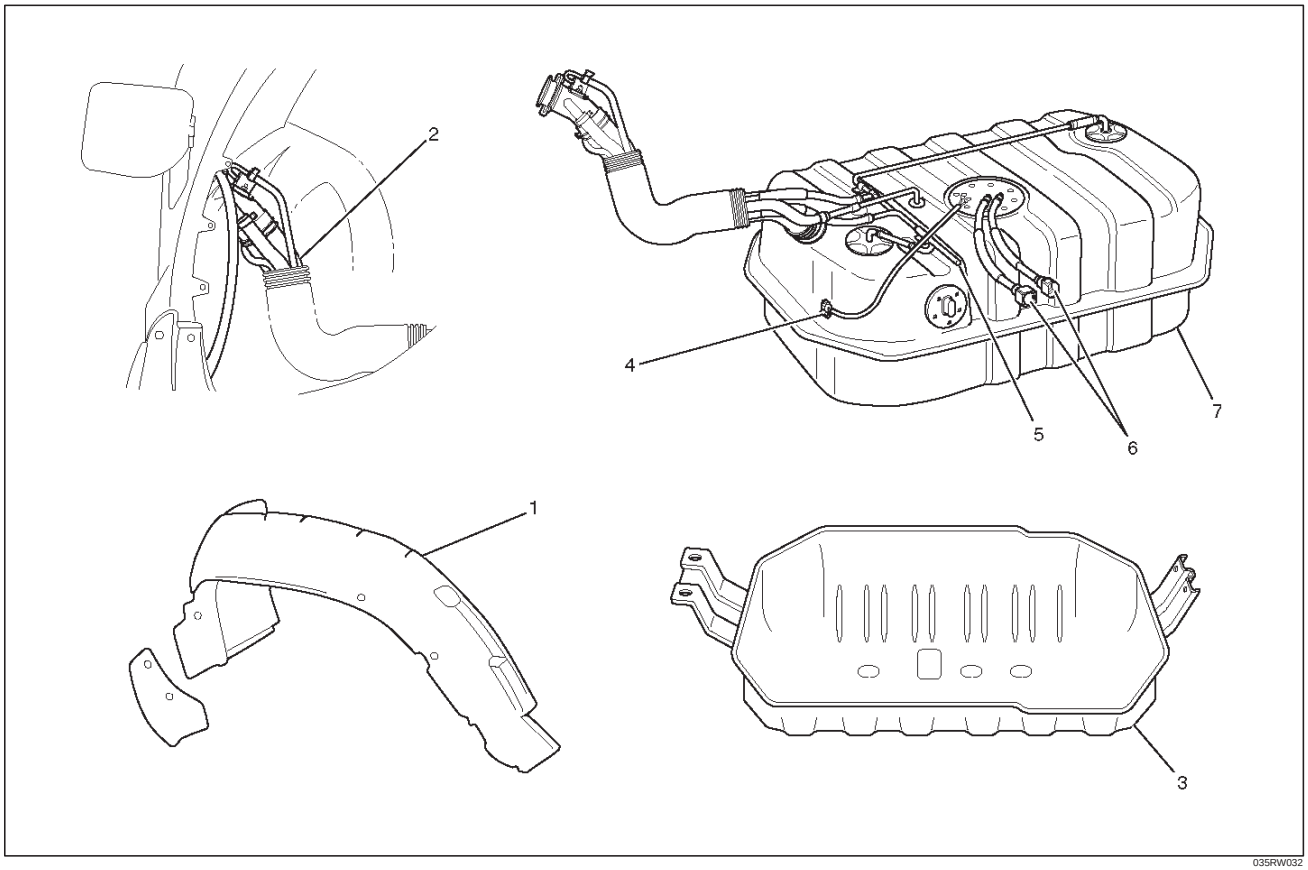

035RW032

Legend

(1) Fender Liner
(2) Fuel Filler Hose and Air Breather Hose and Evapo Hose
(3) Undercover
(4) Fuel Tank Wiring Connector
(5) Evapo Fuel Hose
(6) Fuel Feed Tube and Fuel Return Tube/Quick–Connect Fittings
(7) Fuel Tank

Removal

CAUTION: When repair to the fuel system has been completed, start engine and check the fuel system for loose connection or leakage. For the fuel system diagnosis, see Section “Driveability and Emission”.

1. Disconnect battery ground cable.
2. Loosen fuel filler cap.
3. Drain fuel.
   Tighten drain plug to the specified torque after draining fuel.

   Torque: 20 N·m (14 lb ft) — M8
4. Remove fender liner (1) of wheel well on rear right side.
5. Fuel filler hose, air breather hose and evapo hose (2).
6. Remove undercover fixing bolts on both sides and remove under cover(3).

Downloaded from www.Manualslib.com manuals search engine

7. Disconnect two fuel tank wiring connectors(4) on front right side of tank.
8. Disconnect evapo fuel hose(5).
9. Disconnect fuel feed tube and fuel return tube(6).

NOTE: Handling of the fuel tube, be sure to refer “Fuel Tube/Quick–Connect Fittings” in this section.

10. Remove fuel tank fixing bolts on both sides and remove fuel tank(7).

Installation

1. Install fuel tank(7).
   - Place a flange on right side of tank on the bracket.
   - Install a flange on left side on the bracket from the bottom, and tighten bolts to the specified torque.

   Torque: 36 N·m (27 lb ft)
2. Connect fuel feed tube and fuel return tube(6).
3. Connect evapo fuel hose(5).
4. Connect fuel tank wiring connector(4).
5. Install undercover(3).
6. Connect fuel filler hose, air breather hose and evapo hose(2).
7. Install fender liner(1).
   - Mount fender liner to the wheel well.
   - Fill the tank with fuel and tighten fuel filler cap.
   - Connect battery ground cable.

Fuel Tube / Quick – Connect Fittings

Precautions

- Lighting of Fires Prohibited.
- Keep flames away from your work area to prevent the inflammable from catching fire.
- Disconnect the battery negative cable to prevent shorting during work.
- When welding or conducting other heat-generating work on other parts, be sure to provide pretreatment to protect the piping system from thermal damage or spattering.

Cautions During Work

Do not expose the assembly to battery electrolyte or do not wipe the assembly with a cloth used to wipe off spilt battery electorolyte.
The piping wet with battery electrolyte cannot be used.
Be careful not to give a bending or twisting force to the piping during the work. If deformed, replace with a new piping.

Removal

1. Open the fuel cap to relieve the fuel pressure in the tank.
   If the fuel quick-connect fittings are dusty, clean with an air blower, etc. and then remove it.

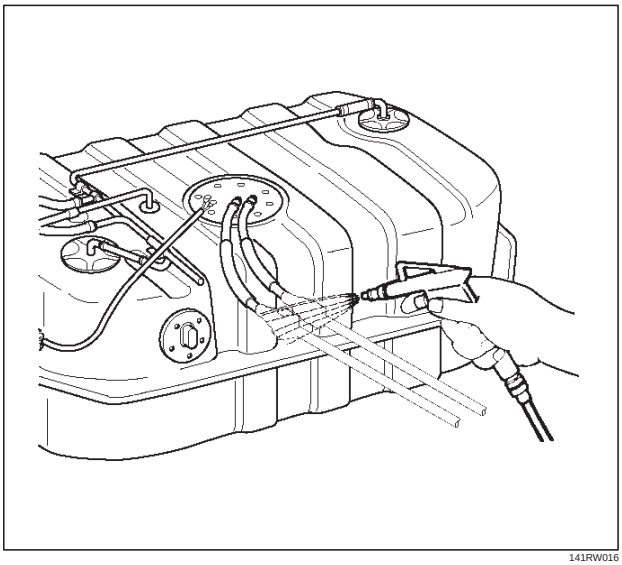

141RW016

As some pressure may remain in the piping, cover the connector with a cloth, etc. to prevent the splashing of fuel in the first disconnection of the piping.

Downloaded from www.Manualslib.com manuals search engine

2. For removal of the delivery pipe (feeding fuel to the engine), hold the connector in one hand, and hold the retainer tab with the other hand and pull out the connector, as illustrated. The pipe can be removed with the retainer attached.

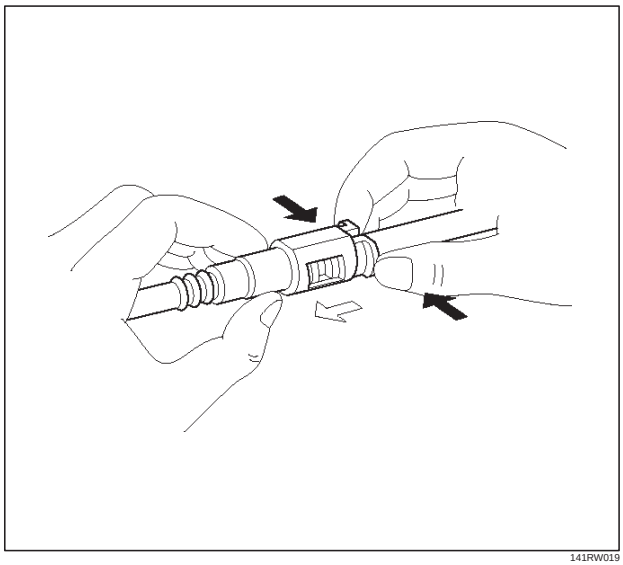

141RW019

3. For removal of the return pipe (returnig fuel to the tank), hold the pipe in one hand, and pull out the connentor with the other hand while pressing the square relieve button of the retainer, as illustrated.

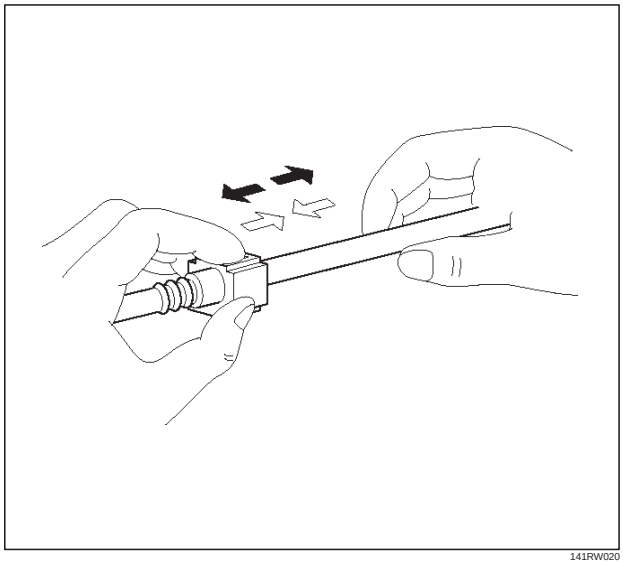

141RW020

NOTE: This work should be done by hands. Do not use any tools. Should the pipe can hardly be removed from the connector, use a lubricant (light oil) and/or push and pull the connector longitudinally until the pipe is removed.

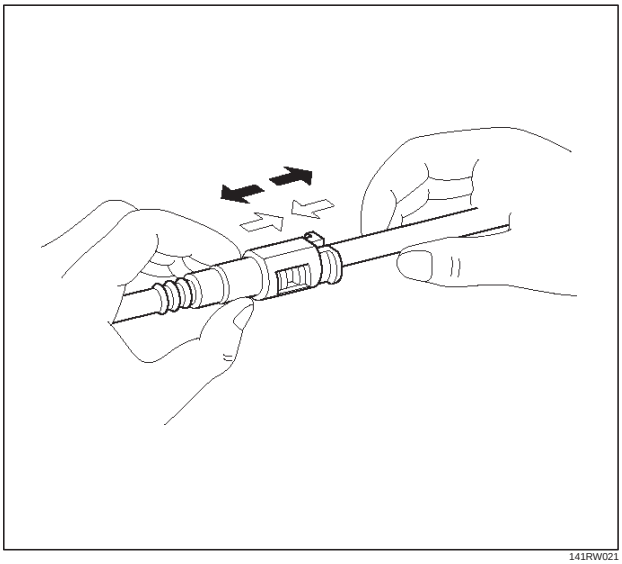

141RW021

When reusing the delivery pipe retainer, reuse without removing the retainer from the pipe. If the retainer is damaged or deformed, however, replace with a new retainer.

Cover the connectors removed with a plastic bag, etc. to prevent the entry of dust or rain water.

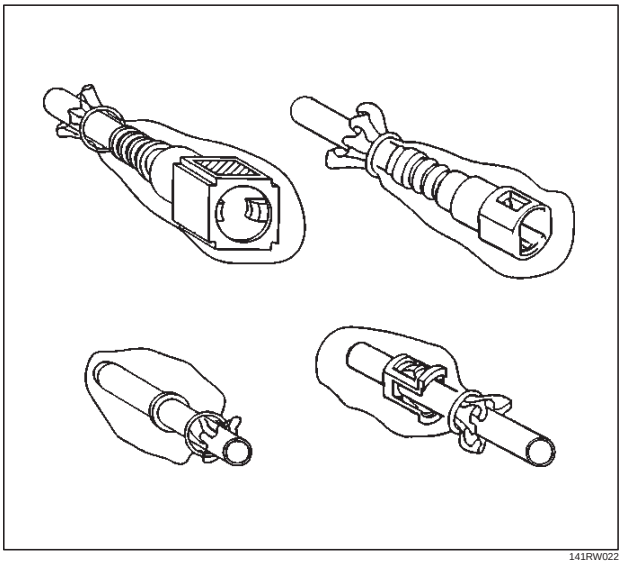

141RW022

Downloaded from www.Manualslib.com manuals search engine

Reuse of Quick–Connector

(Delivery Pipe)

- Replace the pipe and connector if scratch, dent or crack is found.
- Remove mud and dust from the pipe and make sure that the end including spool is free of defects, such as scratch, rust, and dent, which may cause poor sealability. If defective, replace with a new pipe.
- If the retainer removed according to the removal step above is attached to the pipe, clean and insert it straight into the quick-connector till it clicks. After it clicks, try pulling it out to make sure that it is not drawn and is securely locked.

NOTE: The retainer, once removed from the pipe, cannot be reused. Just replace with a new retainer. Insert the new retainer into the connector side until it clicks, and connect the pipe as inserting it into the retainer until it clicks.

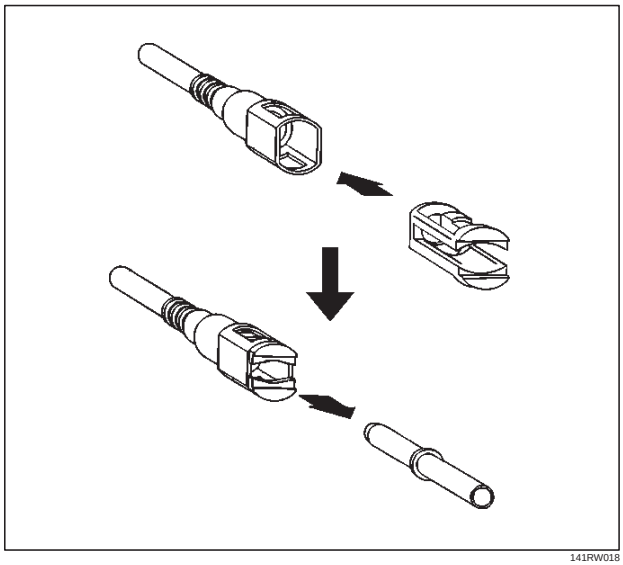

141RW018

(Return Pipe)

- Replace the pipe and connector if scratch, dent or crack is found.
- Remove mud or dust from the pipe and make sure that the end including spool is free from defects, such as scratch, rust, and dent, which may cause poor sealability. If defective, replace with a new pipe.
- After cleaning the pipe, insert it straight into the connector until it clicks. After it clicks, try pulling it out to make sure that it is not drawn and is securely locked.

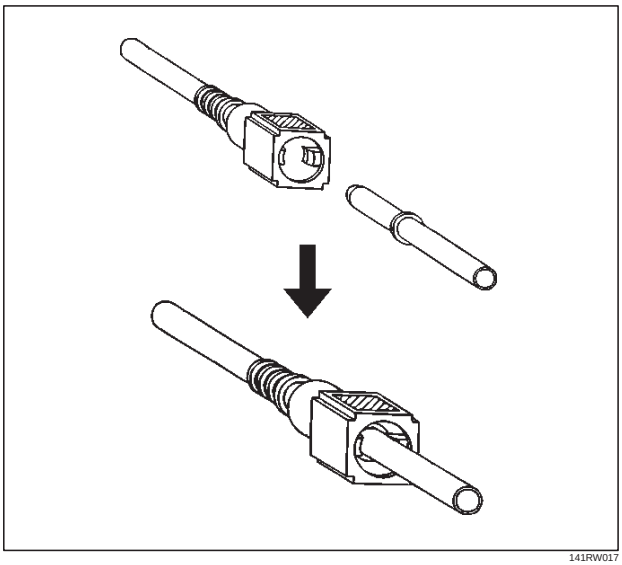

141RW017

Assembling Advice

Application of engine oil or light oil to the pipe facilitates connecting work. The work should be started immediately after lubrication, since dust may stick to the pipe surface to cause poor sealability if a long time passes after lubrication.

Test/Inspection After Assembling

1. Reconnect the battery negative cable.
2. Turn the ignition key to the “ON” position and check pump startup sound. As the pump is actuated to raise fuel pressure, check and see fuel leak from the piping system.
3. Make sure of no fuel leakage by conducting the above fuel leak check a few times.
4. Start the engine and make sure of stable idling speed and normal vehicle run.The entry of dust during the work may sometimes affect the fuel injection system.

Downloaded from www.Manualslib.com manuals search engine

Fuel Gauge Unit

Fuel Gauge Unit and Associated Parts

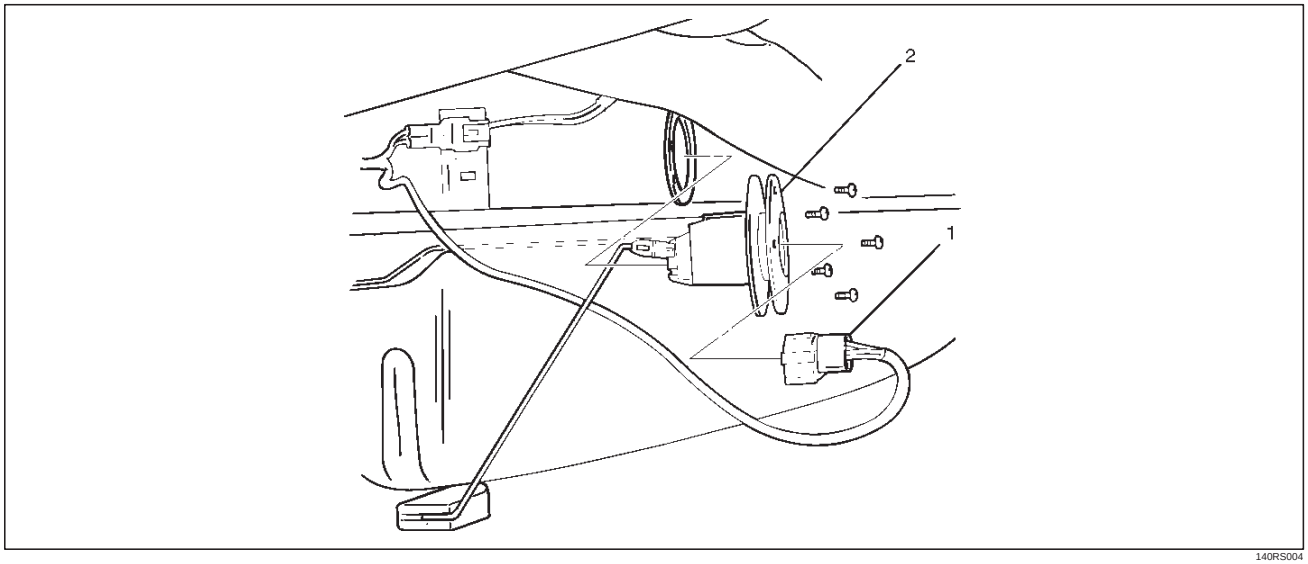

140RS004

Legend
(1) Wiring Connector
(2) Fuel Gauge Unit

Removal

CAUTION: When repair to the fuel system has been completed, start engine and check the fuel system for loose connection or leakage. For the fuel system diagnosis, see Section "Driveability and Emission".

1. Disconnect battery ground cable.
2. Loosen fuel filler cap.
3. Drain fuel.
   Tighten drain plug to the specified torque after draining fuel.

   Torque: 20 N·m (14 lb ft) — M8
4. Wiring connector
   - Disconnect wiring connector(1) from the unit.
5. Fuel gauge unit
   - Remove the fixing screws, then the fuel gauge unit(2).

NOTE: After removing fuel gauge unit, cover fuel tank to prevent any dust entering

Installation

1. Fuel gauge unit(2).
2. Wiring connector(1).
   - Connect the wiring connector to the fuel gauge unit.
   - Fill the tank with fuel and tighten fuel filler cap.
   - Connect battery ground cable.

Downloaded from www.Manualslib.com manuals search engine

Fuel Filler Cap

General Description

Fuel filler cap includes vacuum valve and pressure valve. In case any high vacuum and any high pressure happen in tank, each valve works to adjust the pressure to prevent the tank from being damaged.

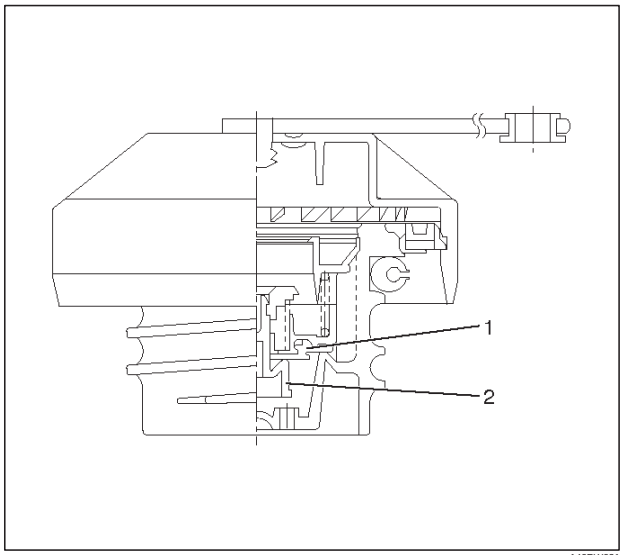

140RW021

Legend

(1) Vacuum Valve
(2) Pressure Valve

Inspection

Check the seal ring in the filler cap for presence of any abnormality and for seal condition.
Replace the filler cap, if abnormal.

CAUTION: The fuel filler cap valves have characteristics.

A defective valve, no valve at all or a valve with the wrong characteristics will do a lot of harm to engine operating characteristics; be sure to use the same fuel filler cap as installed in this vehicle.

Main Data and Specifications

Torque Specification

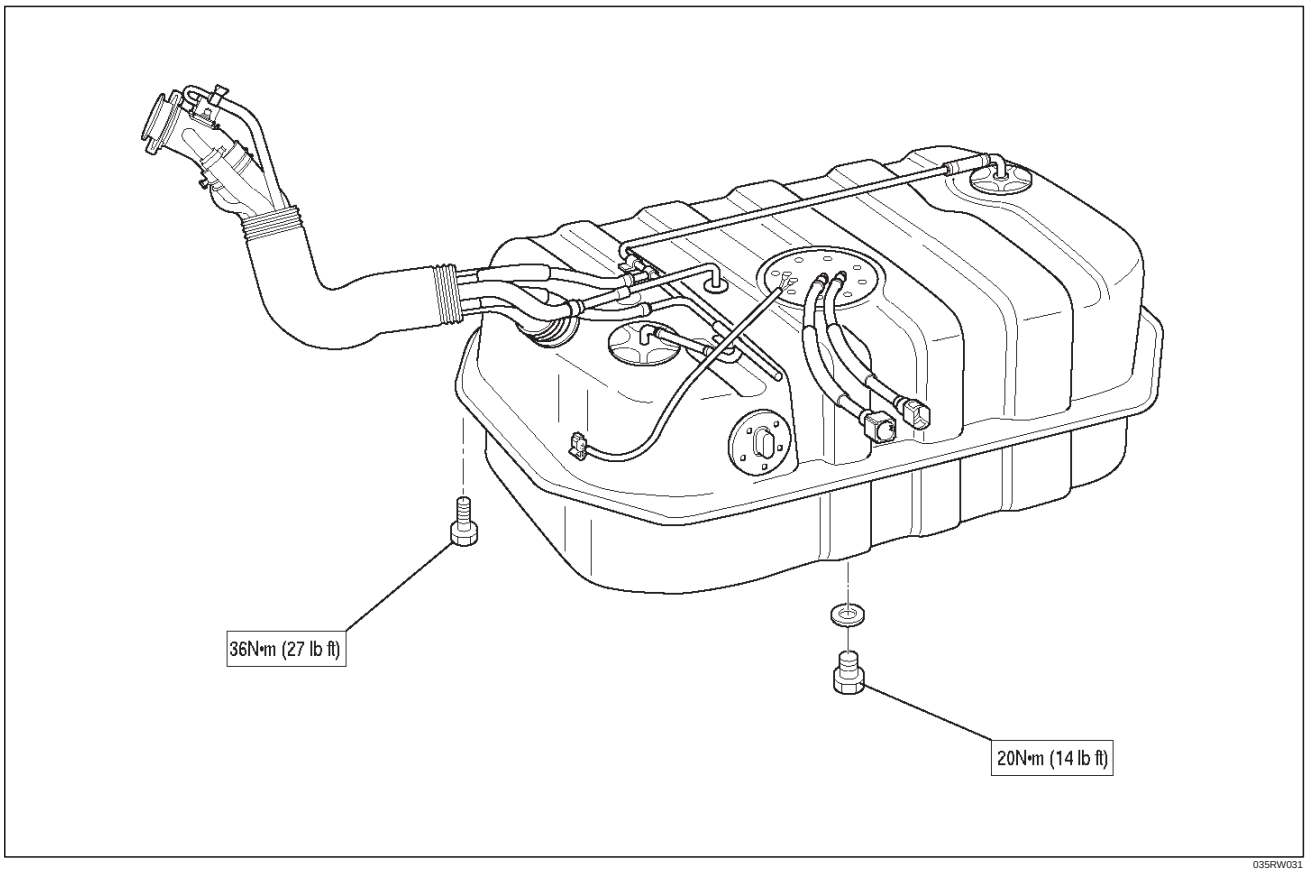

035RW031

Downloaded from www.Manualslib.com manuals search engine

TROOPER

ENGINE

ENGINE ELECTRICAL

CONTENTS

Battery 6D1–1
General Description 6D1–1
Diagnosis 6D1–1
Battery Charging 6D1–2
Jump Starting 6D1–2
Battery Removal 6D1–3
Battery Installation 6D1–3
Main Data and Specifications 6D1–4

Battery

General Description

There are six battery fluid caps on top of the battery. These are covered by a paper label.
The battery is completely sealed except for the six small vent holes on the side. These vent holes permit the escape of small amounts of gas generated by the battery. This type of battery has the following advantages over conventional batteries:

1. There is no need to add water during the entire service life of the battery.
2. The battery protects itself against overcharging.
   The battery will refuse to accept an extensive charge.
   (A conventional battery will accept an excessive charge, resulting in gassing and loss of battery fluid.)
3. The battery is much less vulnerable to self discharge than a conventional type battery.

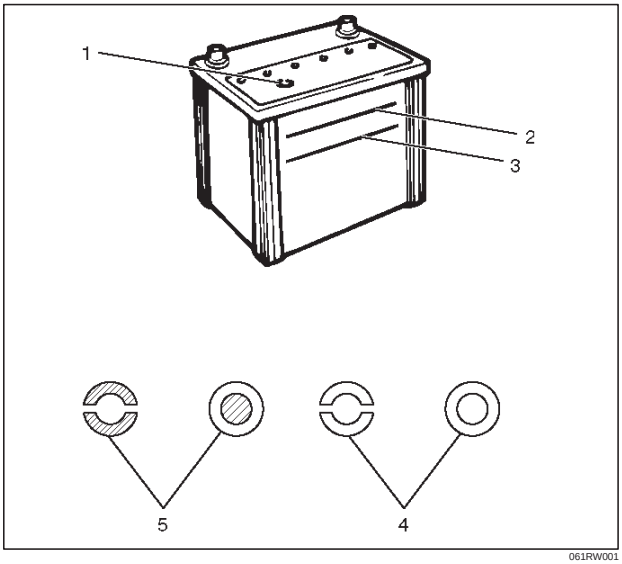

061RW001

Diagnosis

1. Visual Inspection

Inspect the battery for obvious physical damage, such as a cracked or broken case, which would permit electrolyte loss.
Replace the battery if obvious physical damage is discovered during inspection.
Check for any other physical damage and correct it as necessary.

2. Hydrometer Check

There is a built–in hydrometer (Charge test indicator(1)) at the top of the battery. It is designed to be used during diagnostic procedures.
Before trying to read the hydrometer, carefully clean the upper battery surface.
If your work area is poorly lit, additional light may be necessary to read the hydrometer.

a. BLUE RING OR DOT VISIBLE(5) – Go to Step 4.
b. BLUE RING OR DOT NOT VISIBLE(4) – Go to Step 3.

Downloaded from www.Manualslib.com manuals search engine

3. Fluid Level Check

The fluid level should be between the upper level line(2) and lower level line(3) on side of battery.

a. CORRECT FLUID LEVEL – Charge the battery.

b. BELOW LOWER LEVEL – Replace battery.

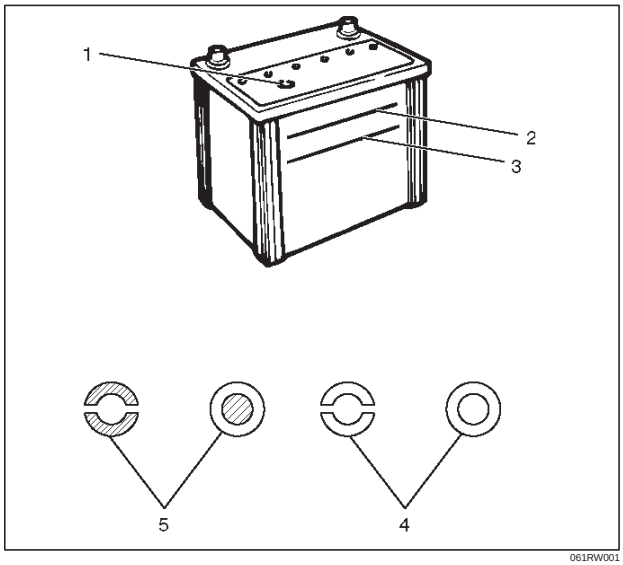

061RW001

4. Voltage Check

1. Put voltmeter test leads to battery terminals.
   a. VOLTAGE IS 12.4V OR ABOVE – Go to Step 5.
   b. VOLTAGE IS UNDER 12.4V – Go to procedure (2) below.
2. Determine fast charge amperage from specification. (See Main Data and Specifications in this section).
   Fast charge battery for 30 minutes at amperage rate no higher than specified value.
   Take voltage and amperage readings after charge.
   a. VOLTAGE IS ABOVE 16V AT BELOW 1/3 OF AMPERAGE RATE – Replace battery.
   b. VOLTAGE IS ABOVE 16V AT ABOVE 1/3 OF AMPERAGE RATE – Drop charging voltage to 15V and charge for 10 – 15 hours. Then go to Step 5.
   c. VOLTAGE IS BETWEEN 12V AND 16V – Continue charging at the same rate for an additional 3–1/2 hours. Then go to Step 5.
   d. VOLTAGE BELOW 12V – Replace Battery.

5. Load Test

1. Connect a voltmeter and a battery load tester across the battery terminals.
2. Apply 300 ampere load for 15 seconds to remove surface charge from the battery. Remove load.
3. Wait 15 seconds to let battery recover. Then apply specified load from specifications (See Main Data and Specifications in this section).
   Read voltage after 15 seconds, then remove load.
   a. VOLTAGE DOES NOT DROP BELOW THE MINIMUM LISTED IN THE TABLE – The battery is good and should be returned to service.
   b. VOLTAGE IS LESS THAN MINIMUM LISTED – Replace battery.

ESTIMATED TEMPERATURE		MINIMUM VOLTAGE
˚F	˚C	V
70	21	9.6
60	16	9.5
50	10	9.4
40	4	9.3
30	–1	9.1
20	–7	8.9
10	–12	8.7
0	–18	8.5
The battery temperature must be estimated by feel and by the temperature the battery has been exposed to for the preceding few hours.		

Battery Charging

Observe the following safety precautions when charging the battery:

1. Never attempt to charge the battery when the fluid level is below the lower level line on the side of the battery. In this case, the battery must be replaced.
2. Pay close attention to the battery during charging procedure.
   Battery charging should be discontinued or the rate of charge reduced if the battery feels hot to the touch.
   Battery charging should be discontinued or the rate of charge reduced if the battery begins to gas or spew electrolyte from the vent holes.
3. In order to more easily view the hydrometer blue dot or ring, it may be necessary to jiggle or tilt the battery.
4. Battery temperature can have a great effect on battery charging capacity.
5. The sealed battery used on this vehicle may be either quick charged or slow charged in the same manner as other batteries.
   Whichever method you decide to use, be sure that you completely charge the battery. Never partially charge the battery.

Jump Starting

Jump Starting with an Auxiliary (Booster) Battery

CAUTION: Never push or tow the vehicle in an attempt to start it. Serious damage to the emission system as well as other vehicle parts will result.

Downloaded from www.Manualslib.com manuals search engine

Treat both the discharged battery and the booster battery with great care when using jumper cables. Carefully follow the jump starting procedure, being careful at all times to avoid sparking.

WARNING: FAILURE TO CAREFULLY FOLLOW THE JUMP STARTING PROCEDURE COULD RESULT IN THE FOLLOWING:

1. Serous personal injury, particularly to your eyes.
2. Property damage from a battery explosion, battery acid, or an electrical fire.
3. Damage to the electronic components of one or both vehicles particularly.

Never expose the battery to an open flame or electrical spark. Gas generated by the battery may catch fire or explode.
Remove any rings, watches, or other jewelry before working around the battery. Protect your eyes by wearing an approved set of goggles.
Never allow battery fluid to come in contact with your eyes or skin.
Never allow battery fluid to come in contact with fabrics or painted surfaces.
Battery fluid is a highly corrosive acid.
Should battery fluid come in contact with your eyes, skin, fabric, or a painted surface, immediately and thoroughly rinse the affected area with clean tap water.
Never allow metal tools or jumper cables to come in contact with the positive battery terminal, or any other metal surface of the vehicle. This will protect against a short circuit.
Always keep batteries out of reach of young children.

Jump Starting Procedure

1. Set the vehicle parking brake.
   If the vehicle is equipped with an automatic transmission, place the selector level in the “PARK” position.
   If the vehicle is equipped with a manual transmission, place the shift lever in the “NEUTRAL” position.
   Turn “OFF” the ignition.
   Turn “OFF” all lights and any other accessory requiring electrical power.
2. Look at the built–in hydrometer.
   If the indication area of the built–in hydrometer is completely clear, do not try to jump start.
3. Attach the end of one jumper cable to the positive terminal of the booster battery.
   Attach the other end of the same cable to the positive terminal of the discharged battery.
   Do not allow the vehicles to touch each other. This will cause a ground connection, effectively neutralizing the charging procedure.
   Be sure that the booster battery has a 12 volt rating.
4. Attach one end of the remaining cable to the negative terminal of the booster battery.
   Attach the other end of the same cable to a solid engine ground (such as the air conditioning compressor bracket or the generator mounting bracket) of the vehicle with the discharged battery.
   The ground connection must be at least 450 mm (18 in.) from the battery of the vehicle whose battery is being charged.

WARNING: NEVER ATTACH THE END OF THE JUMPER CABLE DIRECTLY TO THE NEGATIVE TERMINAL OF THE DEAD BATTERY.

5. Start the engine of the vehicle with the good battery.
   Make sure that all unnecessary electrical accessories have been turned “OFF”.
6. Start the engine of the vehicle with the dead battery.
7. To remove the jumper cables, follow the above directions in reverse order.
   Be sure to first disconnect the negative cable from the vehicle with the discharged battery.

Battery Removal

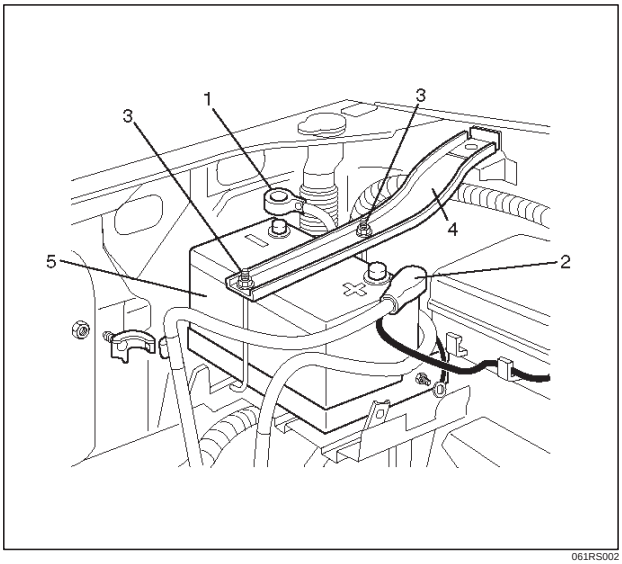

061RS002

1. Remove negative cable (1).
2. Remove positive cable (2).
3. Remove retainer screw and rods (3).
4. Remove retainer (4).
5. Remove battery (5).

Battery Installation

1. Install battery (5).
2. Install retainer (4).
3. Instal retainer screw and rods (3).

NOTE: Make sure that the rod is hooked on the body side.

4. Install positive cable (2).
5. Install negative cable (1).

Downloaded from www.Manualslib.com manuals search engine

Main Data and Specifications

General Specifications

Model (JIS)	95D31R–MF	80D26R–MF	75D26R–MF
Voltage (V)	12	12	12
Cold Cranking Performance (Amp)	622	582	490
Reserve Capacity (Min)	159	133	123
Load Test (Amp)	310	290	245
Fast Charge Maximum Amperage (Amp)	20	20	20
BCI Group No.	27	24	24

Downloaded from www.Manualslib.com manuals search engine

TROOPER

ENGINE

IGNITION SYSTEM

CONTENTS

Service Precaution 6D2–1
General Description 6D2–2
Diagnosis 6D2–2
Ignition Coil 6D2–3
Removal 6D2–3
Inspection and Repair 6D2–3
Installation 6D2–3
Spark Plug 6D2–5
Removal 6D2–5
Inspection and Repair 6D2–5
Installation 6D2–5
Crankshaft Position Sensor 6D2–6
Removal 6D2–6
Installation 6D2–6
Main Data and Specifications 6D2–7

Service Precaution

WARNING: THIS VEHICLE HAS A SUPPLEMENTAL RESTRAINT SYSTEM (SRS). REFER TO THE SRS COMPONENT AND WIRING LOCATION VIEW IN ORDER TO DETERMINE WHETHER YOU ARE PERFORMING SERVICE ON OR NEAR THE SRS COMPONENTS OR THE SRS WIRING. WHEN YOU ARE PERFORMING SERVICE ON OR NEAR THE SRS COMPONENTS OR THE SRS WIRING, REFER TO THE SRS SERVICE INFORMATION. FAILURE TO FOLLOW WARNINGS COULD RESULT IN POSSIBLE AIR BAG DEPLOYMENT, PERSONAL INJURY, OR OTHERWISE UNNEEDED SRS SYSTEM REPAIRS.

CAUTION: Always use the correct fastener in the proper location. When you replace a fastener, use ONLY the exact part number for that application. ISUZU will call out those fasteners that require a replacement after removal. ISUZU will also call out the fasteners that require thread lockers or thread sealant. UNLESS OTHERWISE SPECIFIED, do not use supplemental coatings (Paints, greases, or other corrosion inhibitors) on threaded fasteners or fastener joint interfaces. Generally, such coatings adversely affect the fastener torque and the joint clamping force, and may damage the fastener. When you install fasteners, use the correct tightening sequence and specifications. Following these instructions can help you avoid damage to parts and systems.

Downloaded from www.Manualslib.com manuals search engine

General Description

Ignition is done by the electronic ignition (EI) that directly fires the spark plugs from ignition coils through spark plug wires without using a distributor. A pair of ignition coils for the cylinders having different phases by 360˚ (No.1 and No.4,No.2 and No.5,No.3 and No.6) are fired simultaneously.

Since the cylinder on exhaust stroke requires less energy to fire its ignition plug, energy from the ignition coils can be utilized to fire the mating cylinder on compression stroke. After additional 360˚ rotation, respective cylinder strokes are reversed.

The EI consists of six ignition coils,ignition control module, position angle sensor, powertrain control module (PCM) and other components.

The ignition coils are connected with the PCM by means of a 80 pin connector.

The ignition control module turns on/off the primary circuit of ignition coils, and also it controls the ignition timing at the engine speed below 538 rpm.

A notch in the timing disc on the crankshaft activates the crank position sensor which then sends information such as firing order and starting timing of each ignition coil to the PCM.

Further, the EI employs ignition control (IC) to control similar to a distributor system.

By receiving signals such as crank position,engine speed, water temperature and Manifold Absolute Pressure (MAP), the PCM controls the ignition timing.

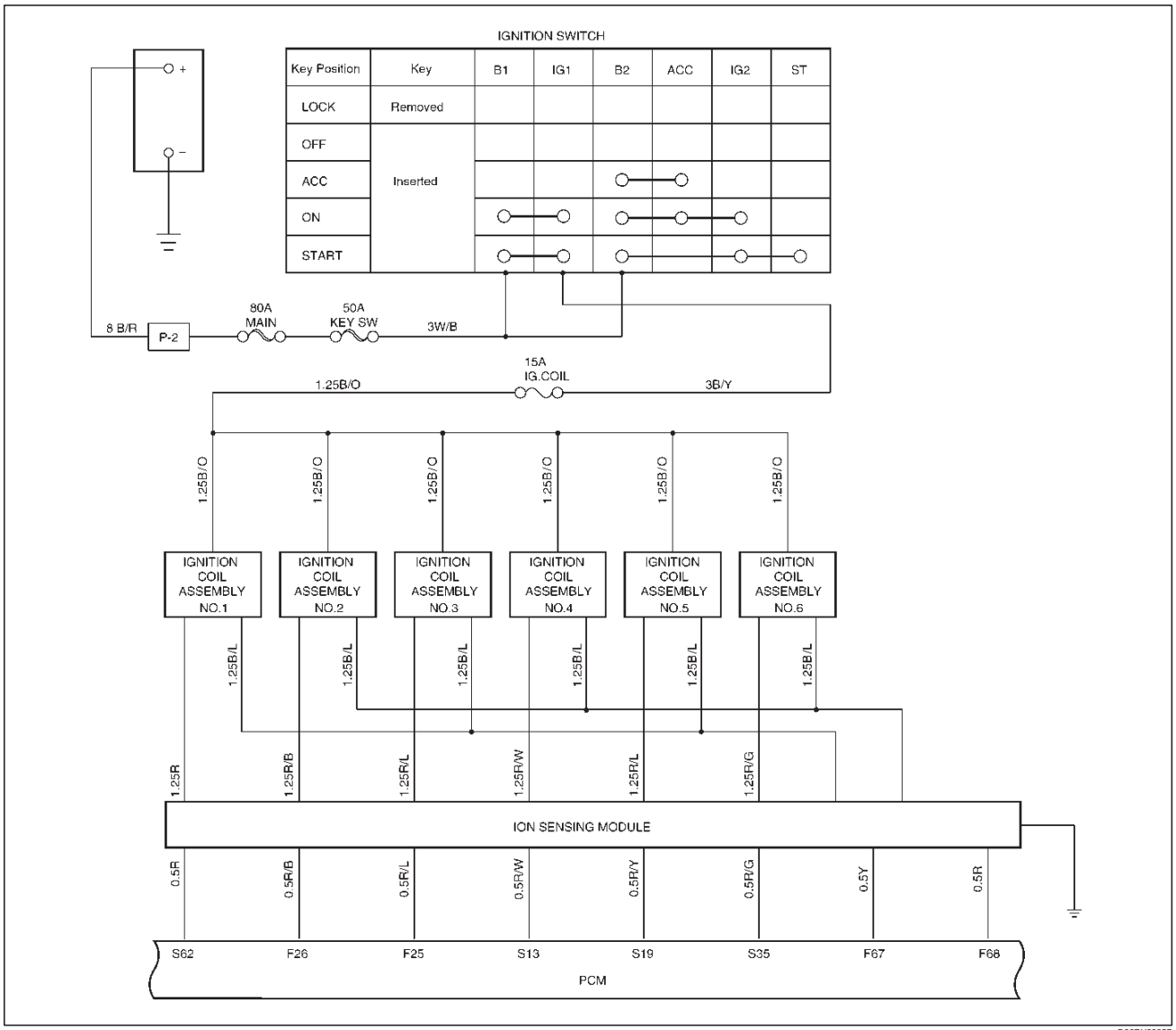

D06RY00037

Diagnosis

Refer to Section Drivability and Emissions for the diagnosis to electronic ignition system (EI system).

Downloaded from www.Manualslib.com manuals search engine

Ignition Coil

Removal

1. Disconnect battery ground cable.
2. Ignition coil connector and ignition coil.
   - Disconnect three connector from ignition coil.
   - Remove harness bracket bolt on cylinder head cover.
   - Remove fixing bolts on ignition coil.

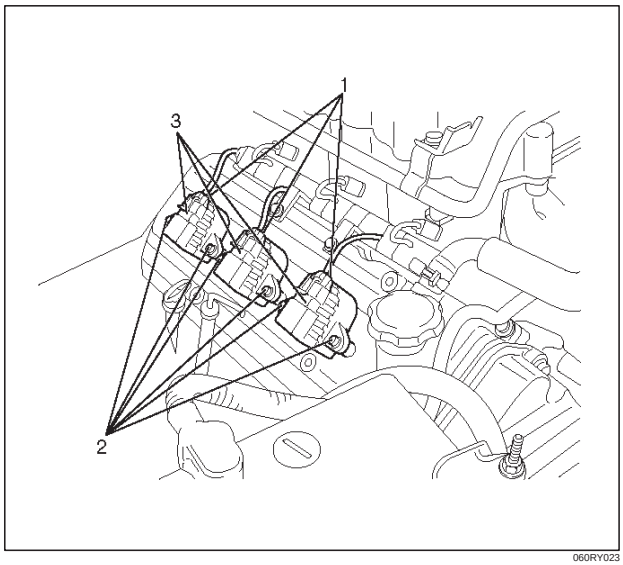

060RY023

Legend

(1) Ignition Coil Connector
(2) Bolt
(3) Ignition Coil Assembly

Inspection and Repair

Check the ignition coil assembly for insulation. Check terminals for corrosion or damage, and replace as necessary.
Measuring resistance of ignition coil assembly.

Terminal No.	Limit
1 to 2	Resistance cannot be 0 ohm (short) or infinity (open circuit).
1 to 3	Same as above
2 to 3	Same as above

Measure resistance of ignition coil assembly, and replace the ignition coil assembly if its value exceeds the standard.

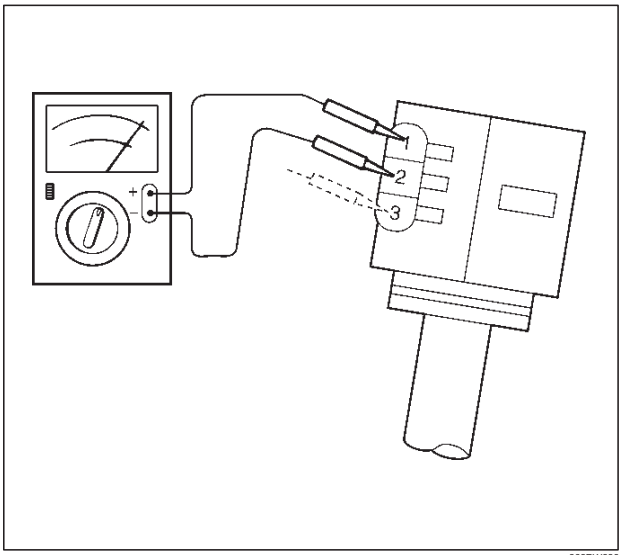

060RW006

Installation

1. Install the ignition coil assembly (3).
   Connect ignition coil connector (1) and ignition coil (3), then tighten bolt (2) to the specified torque.

   Torque: 4 N·m (35.4 lb in)

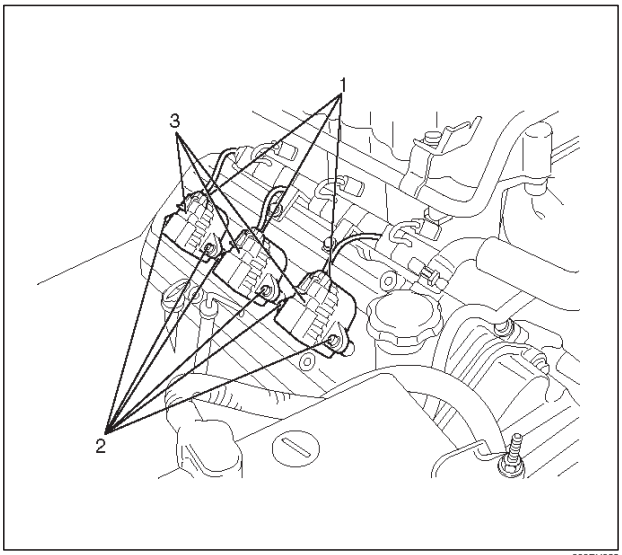

060RY023

Downloaded from www.Manualslib.com manuals search engine

CAUTION: Ignition coil assembly # 6 is different from ignition coil assembly from # 1 to # 5. Ignition coil assembly # 6 is short type. So, note it when installing ignition coil assembly of # 6.

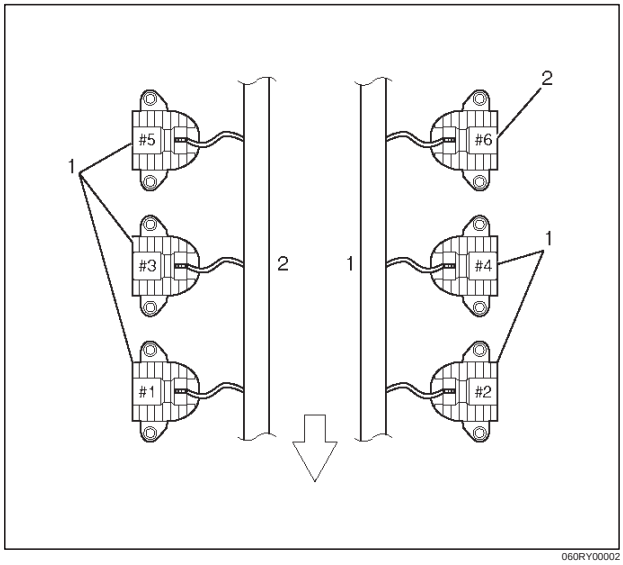

Legend

(1) Long Type Ignition Coil Assemblies (# 1 ~ # 5)
(2) Short Type Ignition Coil Assembly (# 6)

2. Connect battery ground cable.

Downloaded from www.Manualslib.com manuals search engine

Spark Plug

Removal

1. Remove spark plugs.

Inspection and Repair

The spark plug affects entire engine performance and therefore its inspection is very important.

- Check electrode and insulator for presence of cracks, and replace if any.
- Check electrode for wear, and replace if necessary.
- Check gasket for damage, and replace if necessary.
- Measure insulation resistance with an ohmmeter, and replace if faulty.
- Adjust spark plug gap to 1.0 mm (0.04 in) ~ 1.1 mm (0.043 in).
- Check fuel and electrical systems if spark plug is extremely dirty.
- Use spark plugs having low heat value (hot type plug) if fuel and electrical systems are normal.
- Use spark plugs having high heat value (cold type plug) if insulator and electrode are extremely burned.

Sooty Spark Plugs

Much deposit of carbon or oil on the electrode and insulator of spark plug reduces the engine performance.

Possible causes:

- Too rich mixture
- Presence of oil in combustion chamber
- Incorrectly adjusted spark plug gap

Burning Electrodes

This fault is characterized by scorched or heavily oxidized electrode or blistered insulator nose.

Possible causes:

- Too lean mixture
- Improper heat value

Measuring Insulation Resistance

- Measure insulation resistance using a 500 volt megaohm meter.
- Replace spark plugs if measured value is out of standard.

Insulation resistance: 50 MΩ or more

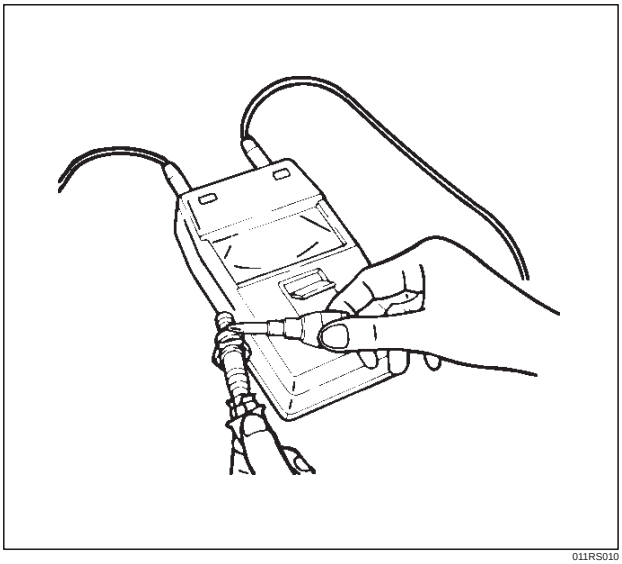

011RS010

Cleaning Spark Plugs

- Clean spark plugs with a spark plug cleaner.
- Raise the ground electrode to an angle of 45 to 60 degrees. If electrode is wet, dry it before cleaning.
- After spark plug is thoroughly cleaned, check insulator for presence of cracks.
- Clean threads and metal body with a wire brush.
- File the electrode tip if electrode is extremely worn.
- Bend the ground electrode to adjust the spark plug gap.

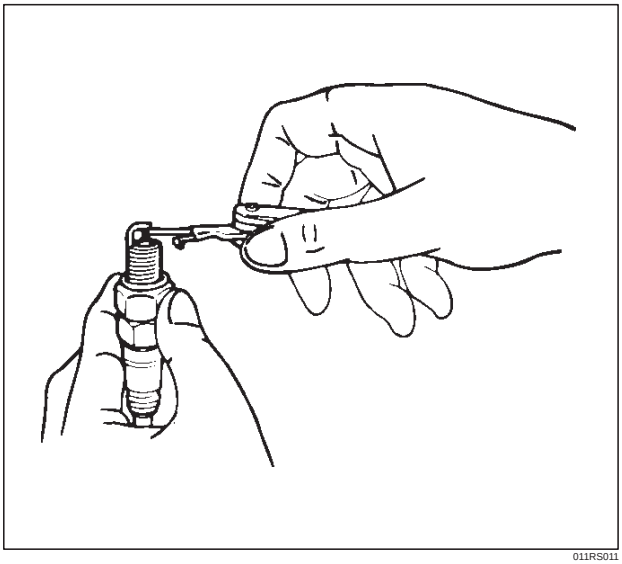

011RS011

Installation

1. Spark plugs
   - Tighten spark plugs to the specified torque.

   Torque: 18 N·m (13 lb ft)

Downloaded from www.Manualslib.com manuals search engine

Crankshaft Position Sensor

Removal

1. Disconnect battery ground cable
2. Wiring connector from crankshaft position sensor.
3. Remove crankshaft position sensor from cylinder block.

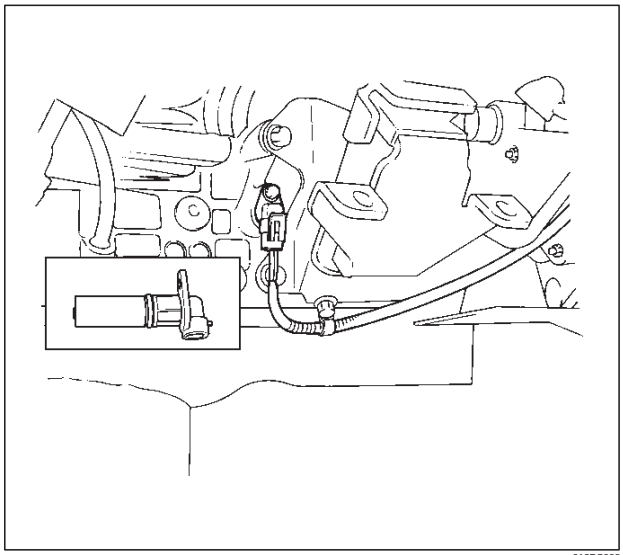

012RS008

Installation

1. Install crankshaft position sensor into the cylinder block.
   Before installation,apply small amount of engine oil to the O–ring.

   Torque: 10 N·m (89 lb in)
2. Reconnect wiring connector to crankshaft position sensor.

Downloaded from www.Manualslib.com manuals search engine

Main Data and Specifications

General Specifications

Ignition System	
Ignition Form	Electronic Ignition System (EI system) with Crankshaft position Sensor
Spark Plug	
Type	K16PR–P11 RC10PYP4 PK16PR11
Plug gap	1.0 mm (0.04 in) – 1.1 mm (0.043 in)
Torque	18 N·m (13 lb ft)

Torque Specifications

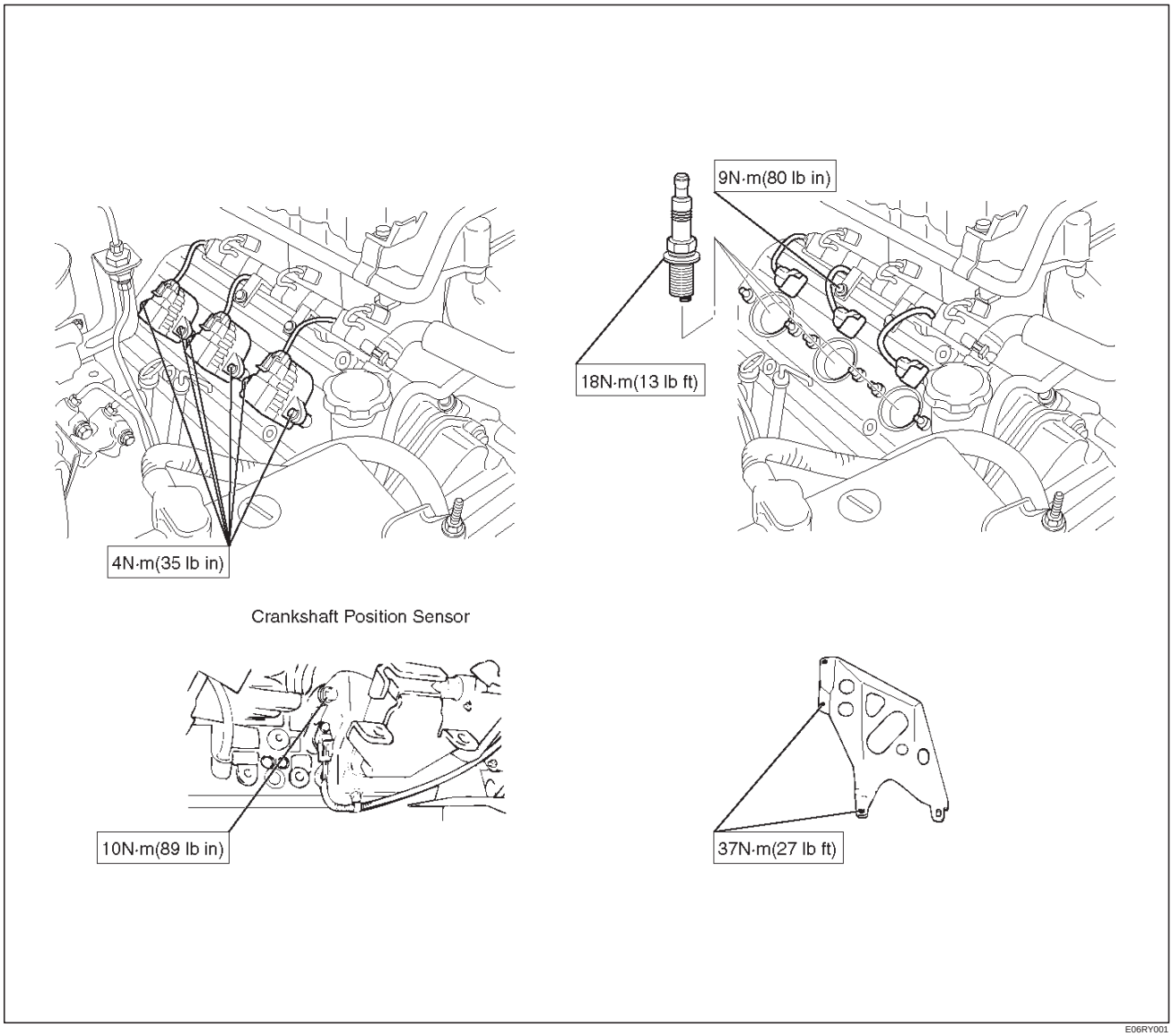

E06RY001

Downloaded from www.Manualslib.com manuals search engine

TROOPER

ENGINE

STARTING AND CHARGING SYSTEM

CONTENTS

Service Precaution 6D3–1
Starting System 6D3–2
General Description 6D3–2
Diagnosis 6D3–4
Starter 6D3–5
Removal 6D3–5
Installation 6D3–5
Disassembled View 6D3–6
Disassembly 6D3–7
Inspection and Repair 6D3–9
Reassembly 6D3–13
Main Data and Specifications 6D3–15
Charging System 6D3–18
General Description 6D3–18
General On–Vehicle Inspection 6D3–18
Generator 6D3–19
Removal 6D3–19
Inspection 6D3–19
Installation 6D3–19
Disassembled View 6D3–20
Disassembly 6D3–21
Inspection and Repair 6D3–23
Reassembly 6D3–25
Bench Test 6D3–25
Main Data and Specifications 6D3–26

Service Precaution

WARNING: THIS VEHICLE HAS A SUPPLEMENTAL RESTRAINT SYSTEM (SRS). REFER TO THE SRS COMPONENT AND WIRING LOCATION VIEW IN ORDER TO DETERMINE WHETHER YOU ARE PERFORMING SERVICE ON OR NEAR THE SRS COMPONENTS OR THE SRS WIRING. WHEN YOU ARE PERFORMING SERVICE ON OR NEAR THE SRS COMPONENTS OR THE SRS WIRING, REFER TO THE SRS SERVICE INFORMATION. FAILURE TO FOLLOW WARNINGS COULD RESULT IN POSSIBLE AIR BAG DEPLOYMENT, PERSONAL INJURY, OR OTHERWISE UNNEEDED SRS SYSTEM REPAIRS.

CAUTION: Always use the correct fastener in the proper location. When you replace a fastener, use ONLY the exact part number for that application. ISUZU will call out those fasteners that require a replacement after removal. ISUZU will also call out the fasteners that require thread lockers or thread sealant. UNLESS OTHERWISE SPECIFIED, do not use supplemental coatings (Paints, greases, or other corrosion inhibitors) on threaded fasteners or fastener joint interfaces. Generally, such coatings adversely affect the fastener torque and the joint clamping force, and may damage the fastener. When you install fasteners, use the correct tightening sequence and specifications. Following these instructions can help you avoid damage to parts and systems.

Downloaded from www.Manualslib.com manuals search engine

Starting System

General Description

Cranking Circuit

The cranking system consists of a battery, starter, starter switch, starter relay, etc. These main components are connected.

Starter

The cranking system employs a magnetic type reduction starter in which the motor shaft is also used as a pinion shaft. When the starter switch is turned on, the contacts of magnetic switch are closed, and the armature rotates. At the same time, the plunger is attracted, and the pinion is pushed forward by the shift lever to mesh with the ring gear.

Then, the ring gear runs to start the engine. When the engine starts and the starter switch is turned off, the plunger returns, the pinion is disengaged from the ring gear, and the armature stops rotation. When the engine speed is higher than the pinion, the pinion idles, so that the armature is not driven.

Downloaded from www.Manualslib.com manuals search engine

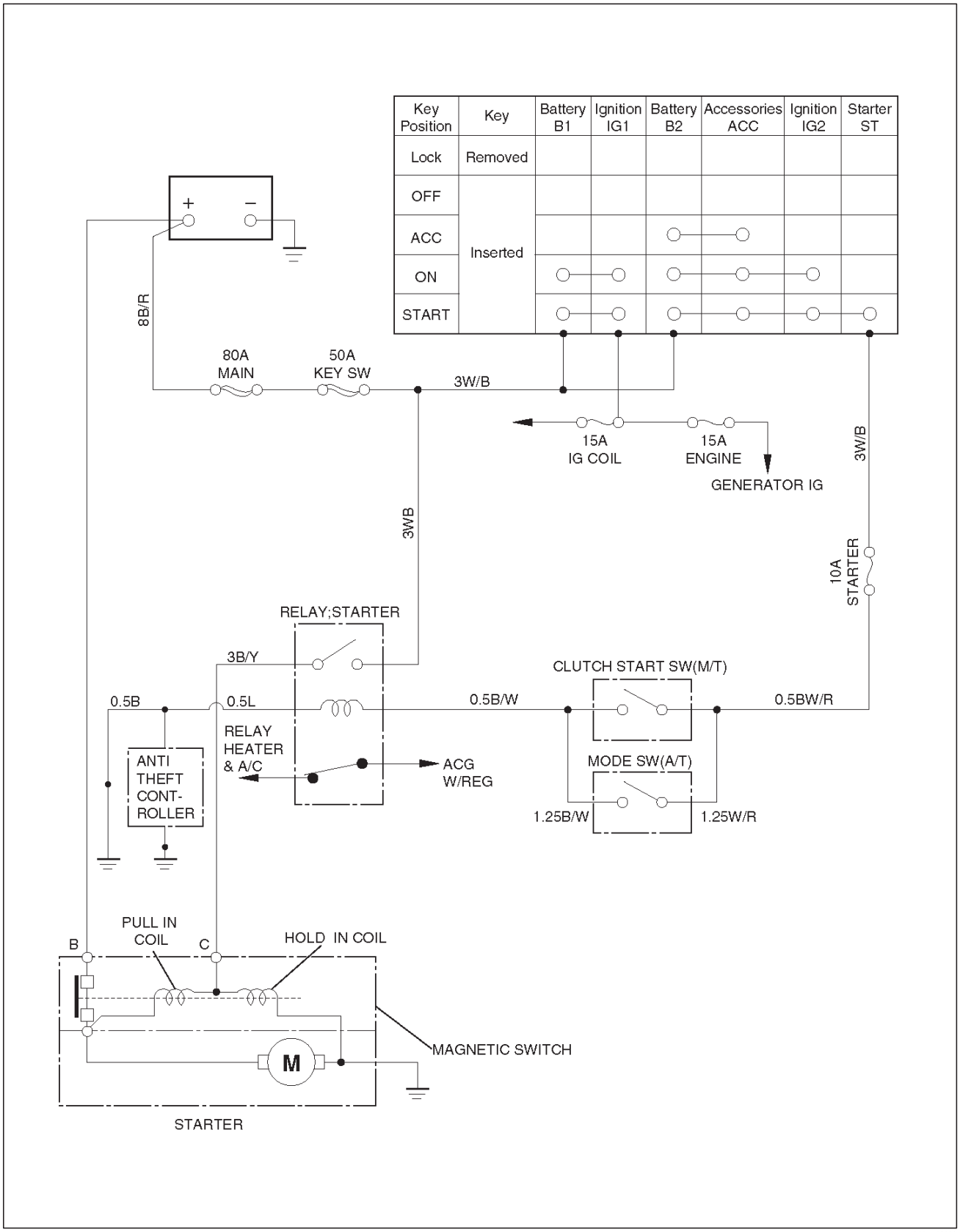

C06RY00002

Downloaded from www.Manualslib.com manuals search engine

Diagnosis

Condition	Possible cause	Correction
Starter does not run	Charging failure	Repair charging system
	Battery Failure	Replace Battery
	Terminal connection failure	Repair or replace terminal connector and/or wiring harness
	Starter switch failure	Repair or replace starter switch
	Starter failure	Repair or replace starter

Downloaded from www.Manualslib.com manuals search engine

Starter

Removal

1. Battery ground cable.
2. Disconnect Heated O_2 Sensor connector (1).
3. Remove exhaust front left pipe(2).

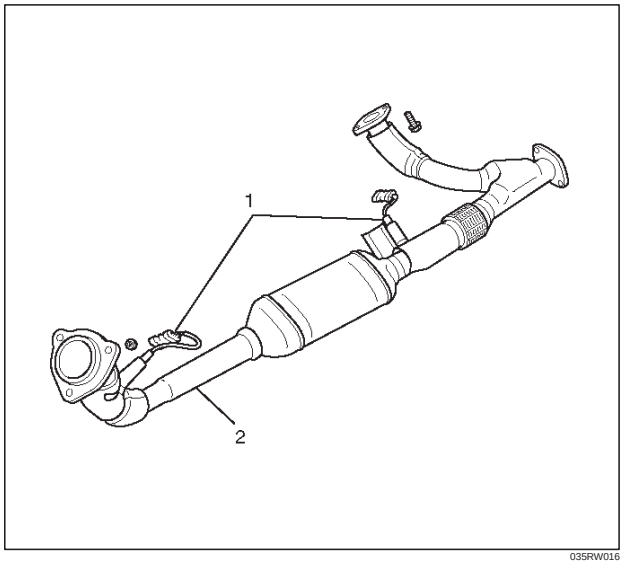

035RW016

4. Remove heat protector(3).
5. Disconnect starter wiring connector from terminals “B” and “S”(4).
6. Remove starter assembly mounting bolts on inside and outside(5).
7. Remove starter assembly toward the bottom of engine(6).

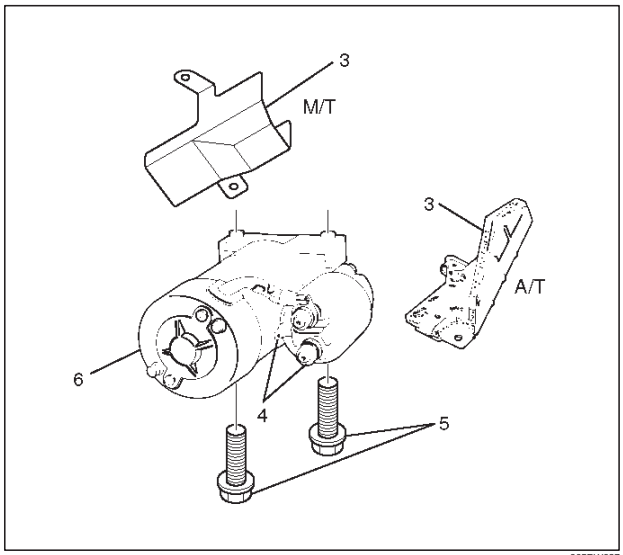

065RW027

Installation

1. Install starter assembly(6).
2. Install mounting bolts and tighten bolts to specified torque(5).

   Torque: 40 N·m (30 lb ft)
3. Reconnect the connectors to terminals “B” and “S” and tighten Terminals “B” to specified torque.

   Torque: 9 N·m (80 lb in)
4. Install heat protector(3).

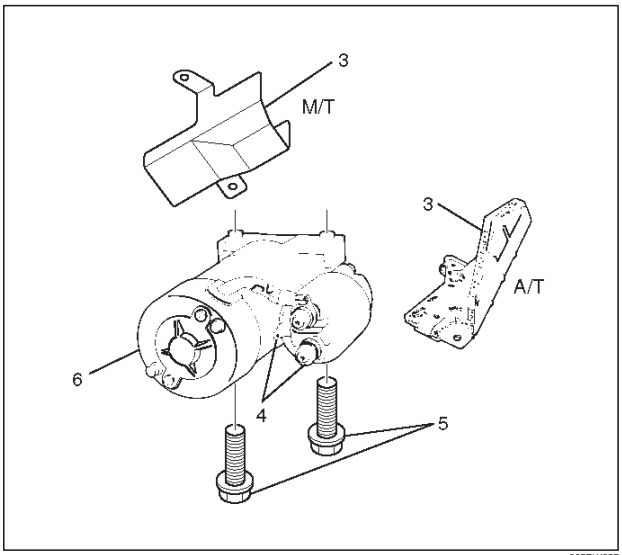

065RW027

5. Install exhaust front left pipe and tighten bolts and nuts to specified torque(2).

   Stud Nuts

   Torque: 67 N·m (49 lb ft)

   Nuts

   Torque: 43 N·m (32 lb ft)
6. Connect Heated O_2 Sensor connector (1).

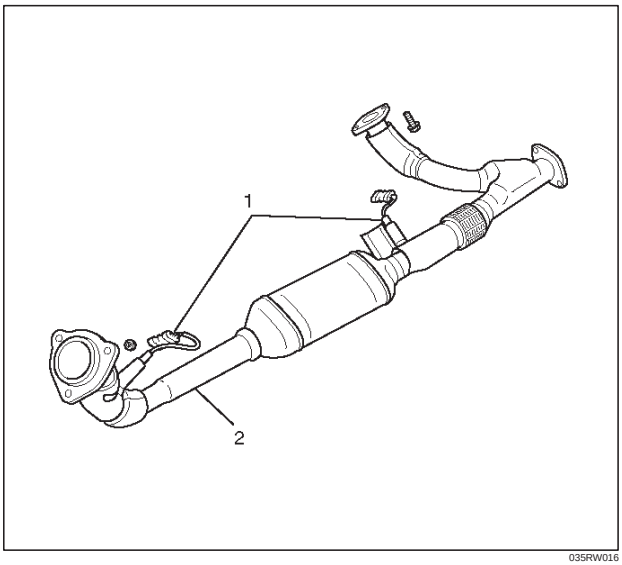

035RW016

7. Reconnect the battery ground cable.

Downloaded from www.Manualslib.com manuals search engine

Disassembled View

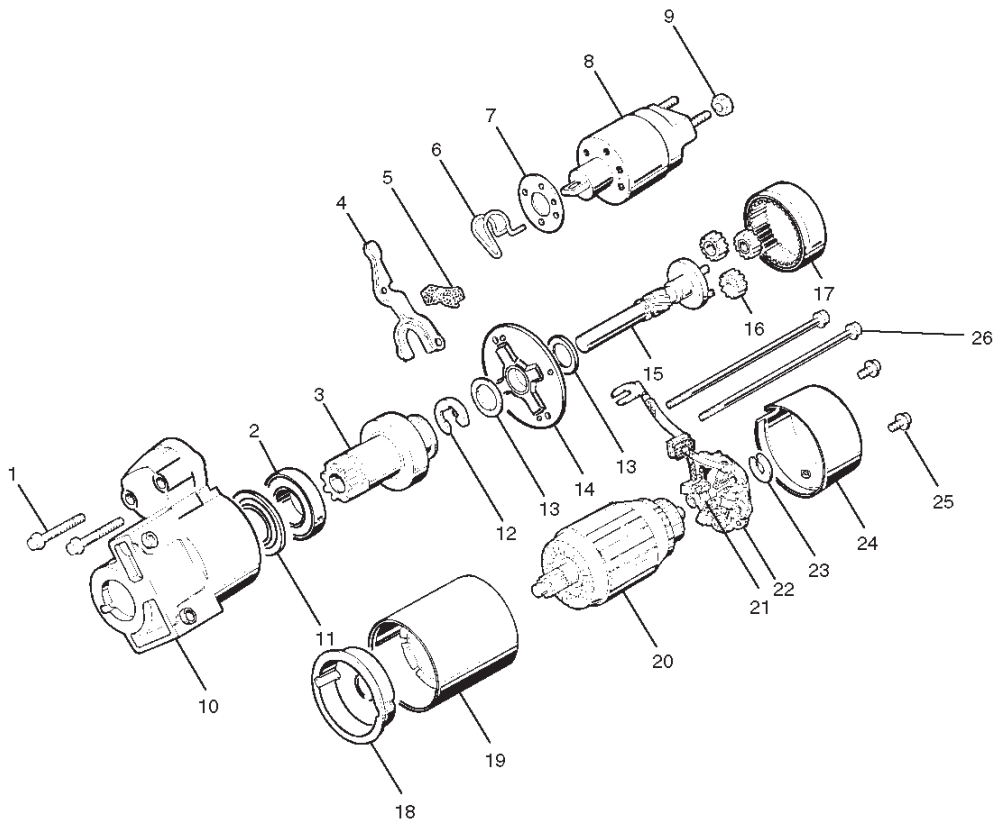

065RW002

Legend

(1) Bolt (2 pcs)
(2) Ball Bearing
(3) Pinion
(4) Shift Lever
(5) Dust Cover
(6) Torsion Spring
(7) Dust Cover
(8) Magnetic Switch
(9) Nut
(10) Gear Case
(11) Bearing Cover
(12) E–Ring
(13) Thrust Washer (2)
(14) Center Bracket
(15) Pinion Shaft
(16) Planet Gear (3)
(17) Internal Gear
(18) Center Bracket (A)
(19) Yoke Assembly
(20) Armature
(21) Brush
(22) Brush Holder
(23) Thrust Washer
(24) Rear Cover
(25) Screw (2 pcs)
(26) Through Bolt (2 pcs)

Downloaded from www.Manualslib.com manuals search engine

Disassembly

1. Loosen the nut(1) on terminal “M” of magnetic switch and disconnect the connector cable.
2. Remove bolt (2 pcs) (2).

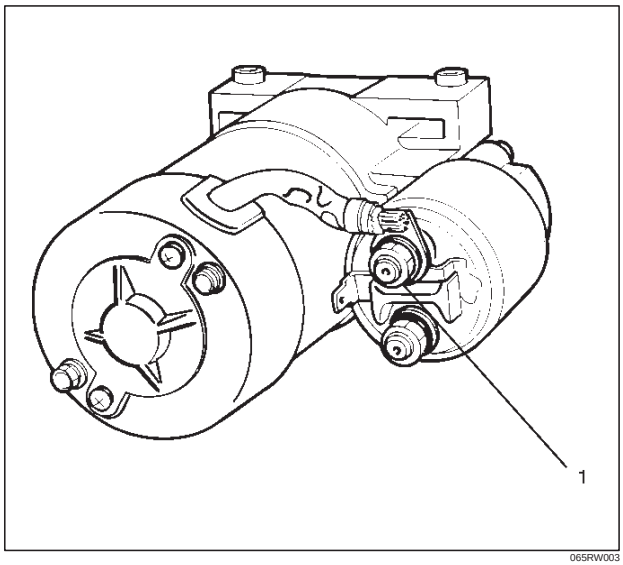

065RW003

3. Remove magnetic switch(5).
4. Remove dust cover(4).
5. Remove torsion spring bolts, then the magnetic switch assembly.
6. Remove torsion spring(3) from magnetic switch assembly(5).

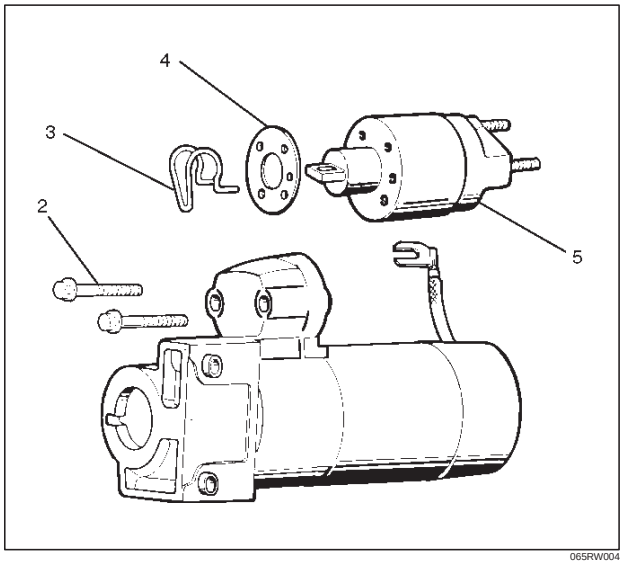

065RW004

7. Remove screw (2 pcs) (8).
8. Remove through bolt (2 pcs) (7).
9. Remove screws and through bolts, then the rear cover(9) then remove thrust washer(10).
10. Remove brush holder(6).

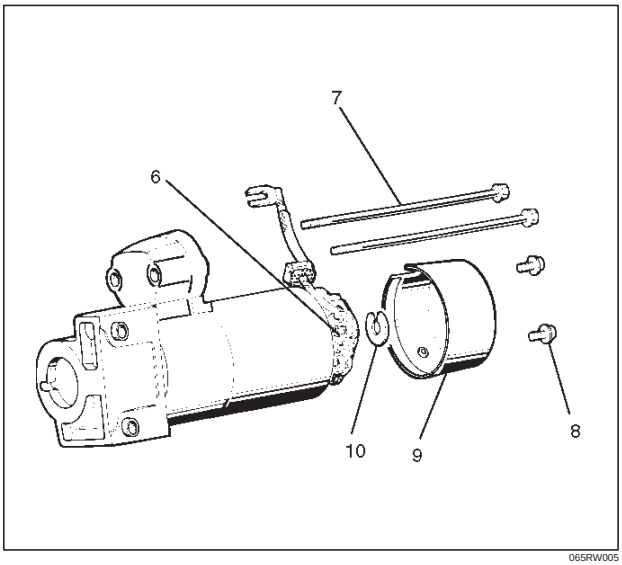

065RW005

11. Raise a brush spring to detach brushes (4 pcs) from the commutator face and pull off the brush holder(12) and brush(11).

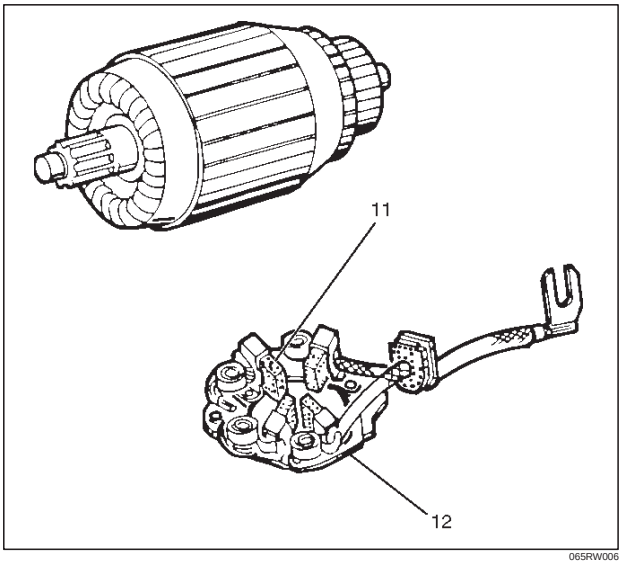

065RW006

Downloaded from www.Manualslib.com manuals search engine

12. Remove yoke assembly(14).
13. Remove armature(15).
14. Pull off the yoke assembly, then remove armature, washer and center bracket.(A) (13).

NOTE: In disassembling the yoke assembly, hold the armature and pull off slowly the yoke assembly. Because of strong magnetic force, avoid placing a metallic part near armature.

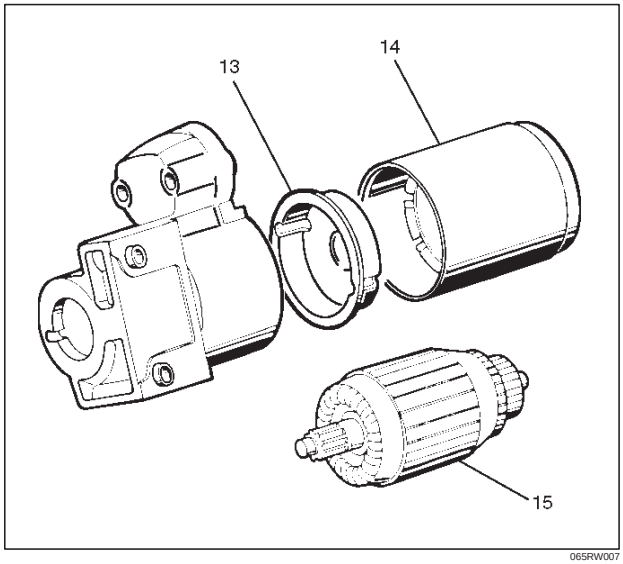

065RW007

15. Remove dust cover(17).
16. Remove a dust cover and shift lever(16) from the gear case.

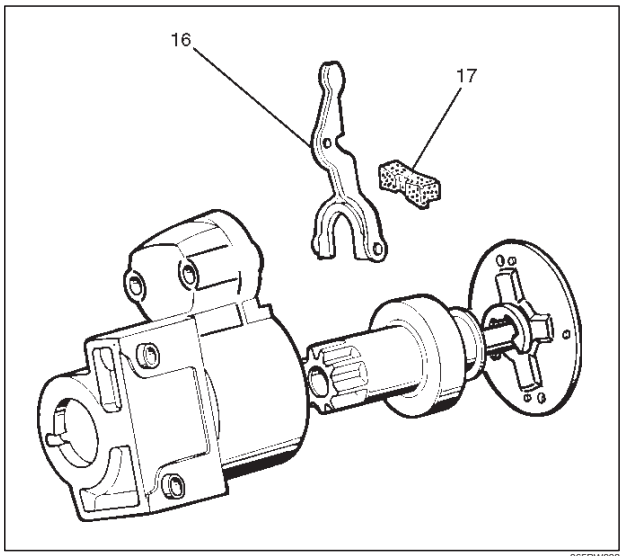

065RW008

17. Remove ball bearing(19).
18. Remove bearing cover(20).
19. Remove a ball bearing and bearing cover from the gear case(18).

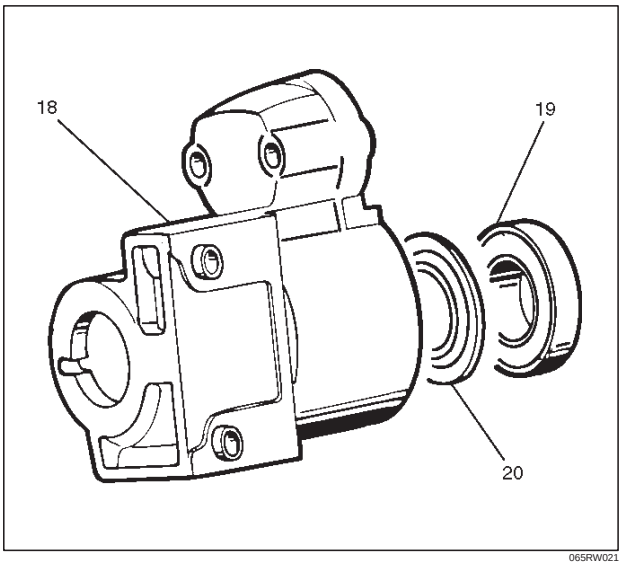

065RW021

20. Internal gear(21).
21. Remove internal gear and planet gear(3) (22).

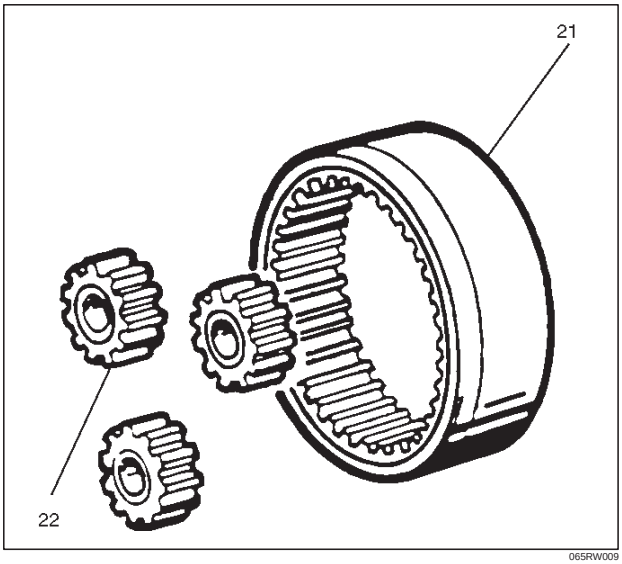

065RW009

Downloaded from www.Manualslib.com manuals search engine

22. Remove an E–ring(23) from the pinion shaft using a flat blade screwdriver.

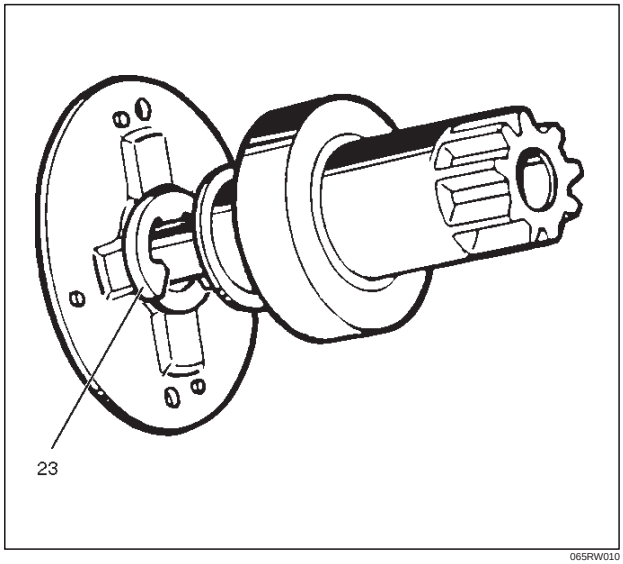

065RW010

23. Holding the pinion shaft, push pinion toward the center bracket. and turn the pinion clockwise or counterclockwise by one tooth of spline, then pull off the pinion.
24. Remove thrust washer(24).
25. Remove center bracket
26. Remove pinion shaft.

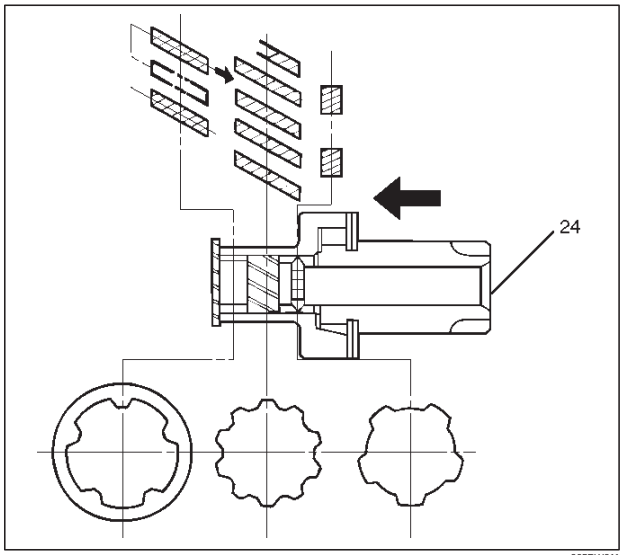

065RW011

Inspection and Repair

Repair or replace necessary parts if extreme wear or damage is found during inspection.

Armature

Measure the outer diameter of commutator, and replace with a new one if it is out of the limit.

Standard: 33.0 mm (1.30 in)

Limit: 32.0 mm (1.26 in)

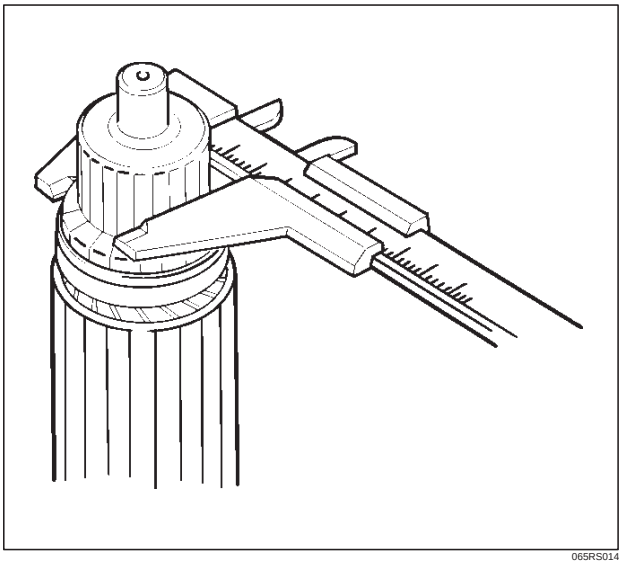

065RS014

Check for continuity between commutator and segment. Replace commutator if there is no continuity (i.e., disconnected).

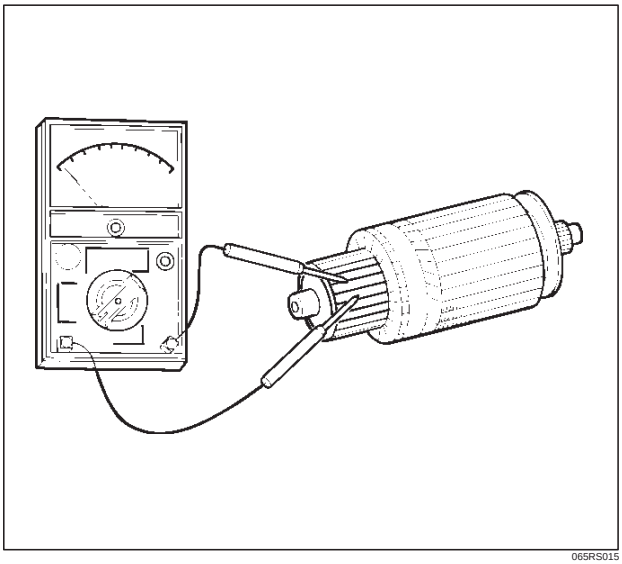

065RS015

Downloaded from www.Manualslib.com manuals search engine

Check for continuity between commutator and shaft. Also, check for continuity between commutator and armature core,armature core and shaft. Replace commutator if there is continuity (i.e., internally grounded).

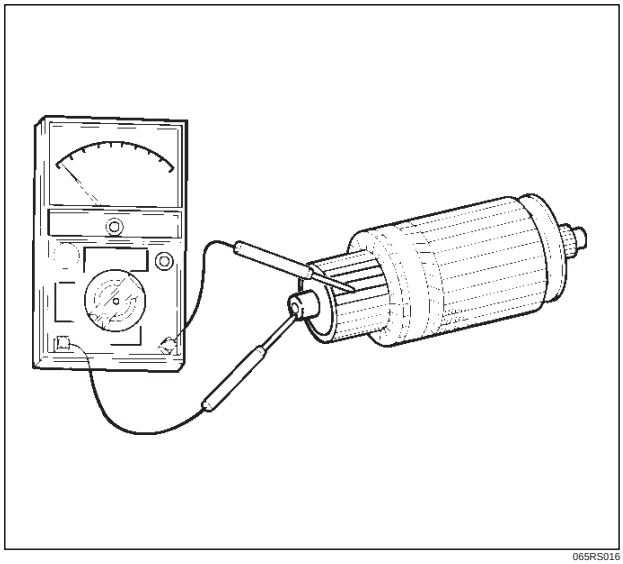

065RS016

Measure runout of armature core and commutator with a dial gauge. Repair or replace, if it exceeds the limit.

Armature

Standard: 0.05 mm (0.002 in) Max.

Limit: 0.10 mm (0.004 in)

Commutator

Standard: 0.05 mm (0.002 in) Max.

Limit: 0.10 mm (0.004 in)

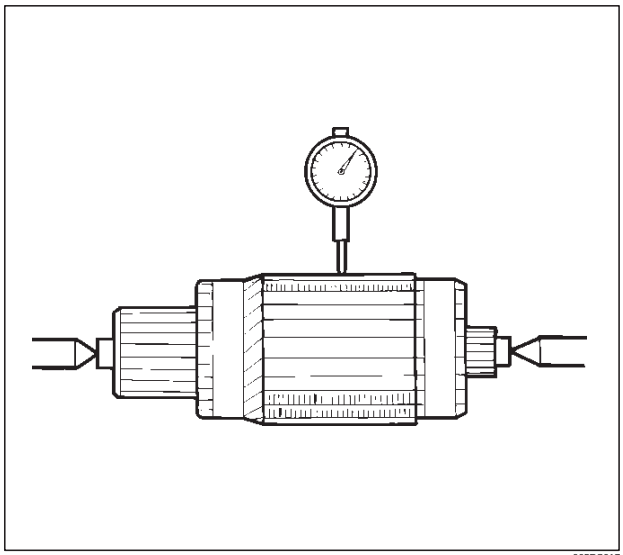

065RS017

Polish the commutator surface with sandpaper #500 to #600 if it is rough.

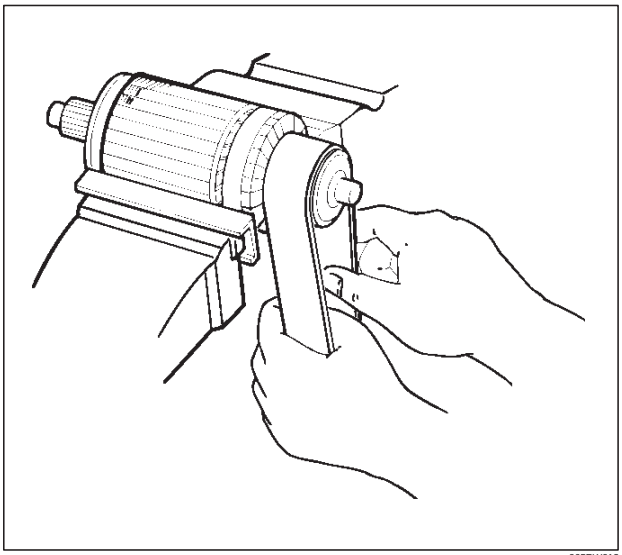

065RW012

Measure the depth of insulator in commutator. Repair, if it is below the limit.

Standard: 0.5 mm to 0.8 mm (0.02 in to 0.03 in)

Limit: 0.2 mm (0.008 in)

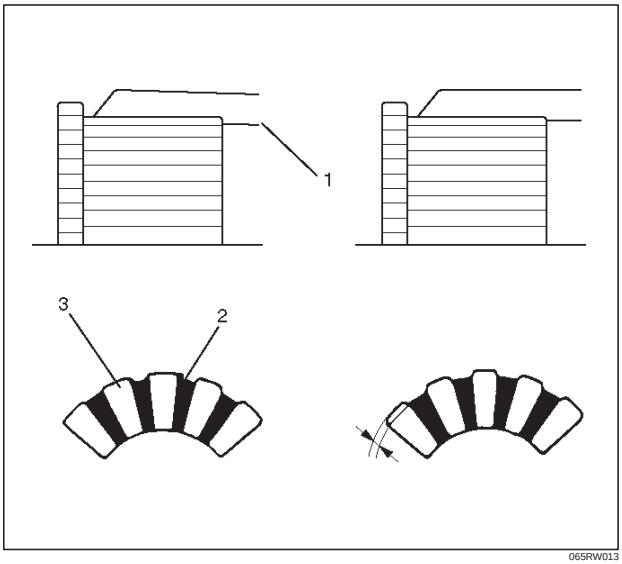

065RW013

Legend

(1) Steel Saw
(2) Insulator
(3) Commutator Segments

Downloaded from www.Manualslib.com manuals search engine

Brush

Measure the length of brush.
Replace with a new one, if it is below the limit.

Standard: 16 mm (0.63 in)

Limit: 11 mm (0.43 in)

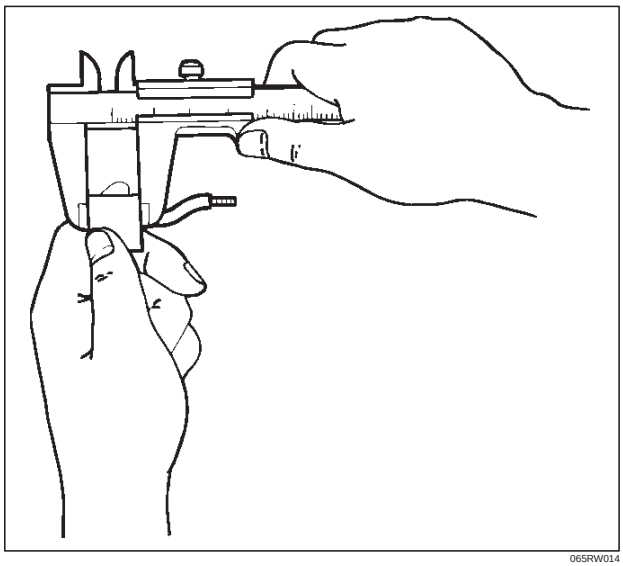

065RW014

Brush Holder

Check for continuity between brush holder (+) (4) and base (–). Replace, if there is continuity (i.e., insulation is broken).

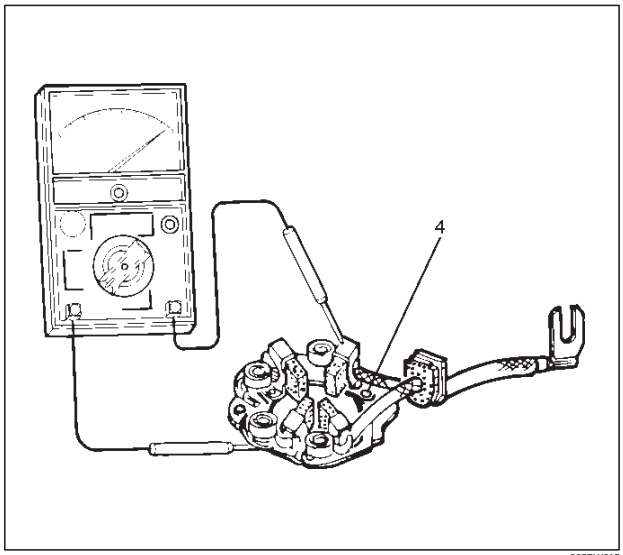

065RW015

Magnetic Switch

Check for continuity of shunt coil between terminals S and M.
Replace, if there is no continuity (i.e., coil is disconnected).

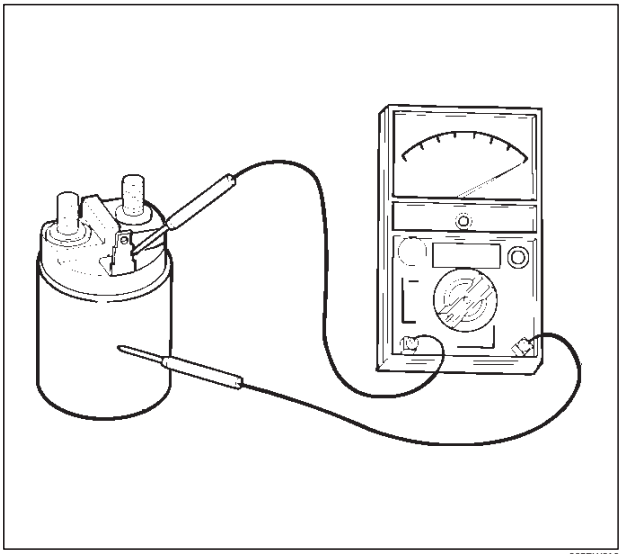

065RW016

Continuity of Series Coil

Check for continuity between terminals S and M.
Replace, if there is no continuity (i.e., coil is disconnected).

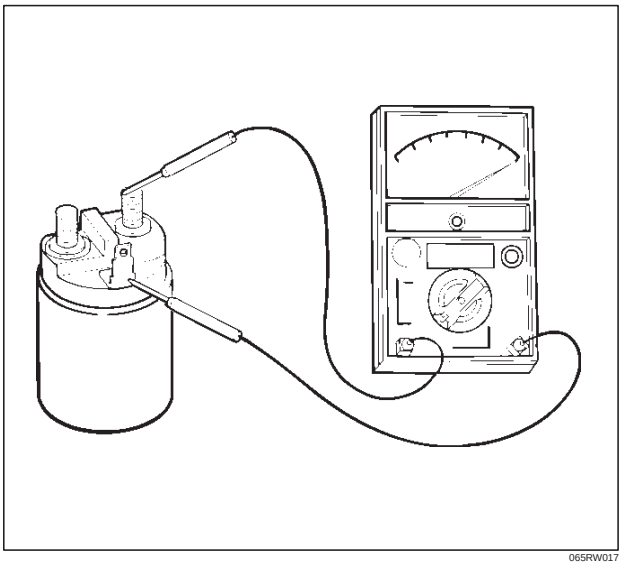

065RW017

Downloaded from www.Manualslib.com manuals search engine

Continuity of Contacts

With the plunger faced downward, push down the magnetic switch. In this state, check for continuity between terminals B and M. Replace, if there is no continuity (i.e., contacts are faulty).

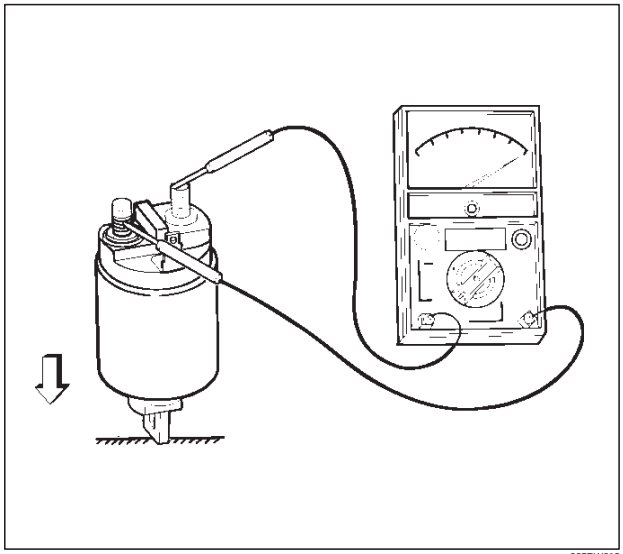

065RW018

Pinion

Check if the pinion rotates smoothly in drive direction by hand, or if it is locked when it is rotated in reverse. If not, replace the pinion.

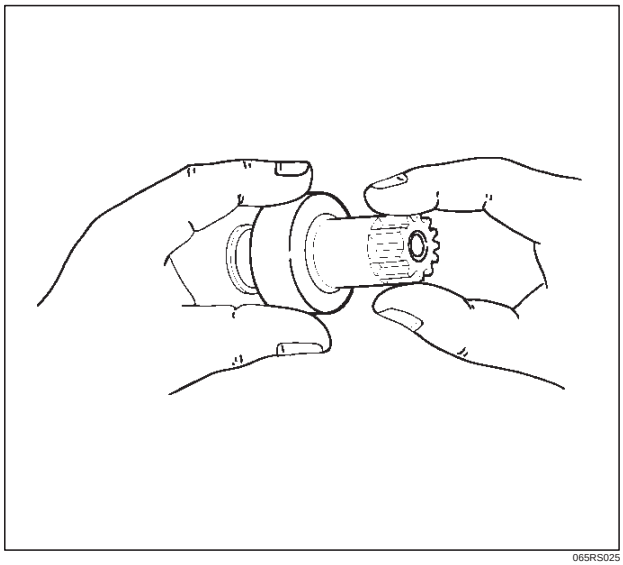

065RS025

Yoke Assembly

Check a magnet inside the yoke.
Replace the yoke assembly if it is broken.

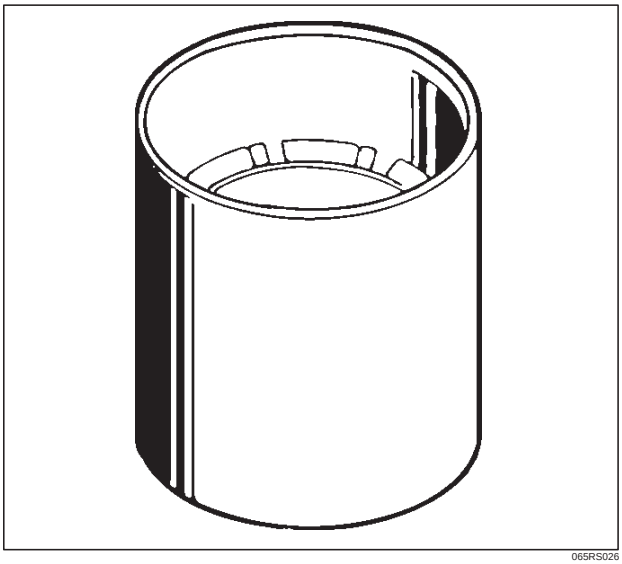

065RS026

Ball Bearing

Clamp the inner race of the ball bearing with your finger, and check for sticking or play when rotating the outer race.
Replace, if abnormality is found.

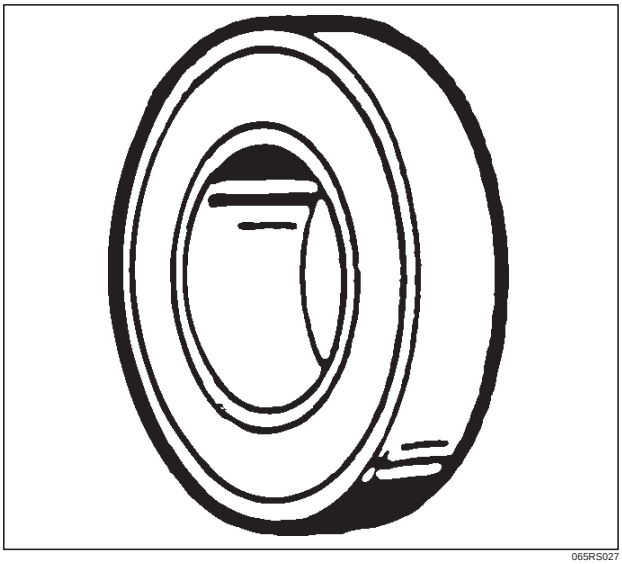

065RS027

Downloaded from www.Manualslib.com manuals search engine

Measure inner diameter of bushing in the rear cover, and replace if it exceeds the limit.

Standard: 12.50 mm to 12.527 mm (0.492 in to 0.4932 in)

Limit: 12.60 mm (0.4961 in)

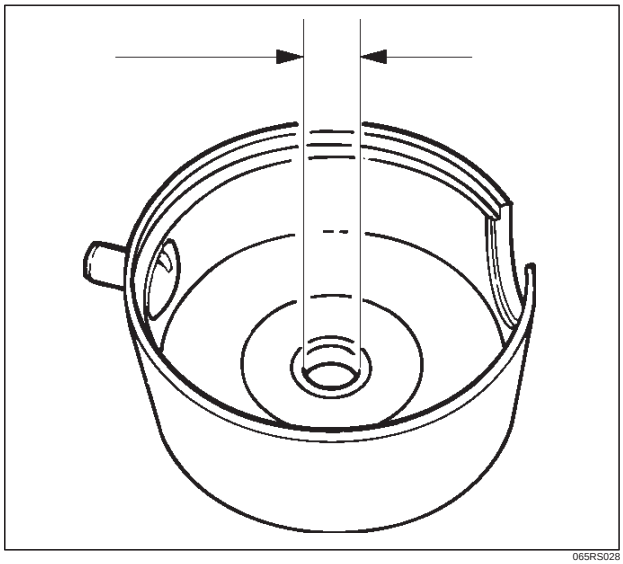

065RS028

Measure inner diameter of bushing in the center bracket (P), and replace if it exceeds the limit.

Standard: 18.01 mm to 18.127 mm (0.7091 in to 0.7137 in)

Limit: 18.15 mm (0.7146 in)

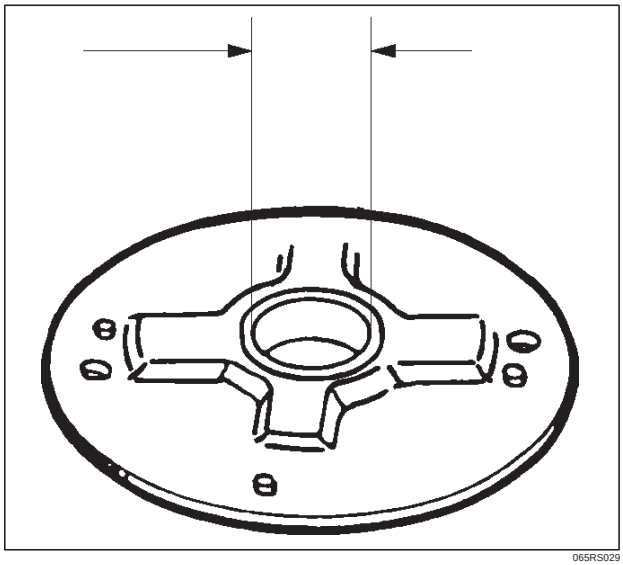

065RS029

Reassembly

To install, follow the removal steps in the reverse order, noting the following points:

Grease application places

- Bushing in rear cover and center bracket
- Gears in reduction gear
- Shift lever operating portion
- Sliding portion of pinion
- Plunger sliding portion of magnetic switch

Reassembling Yoke Assembly

Before reassembly, make sure that no metallic parts attach to the yoke assembly. Because of strong magnetic force, hold the yoke assembly and insert it slowly into the armature.

Torque

Torque for each part (See Torque Specifications in this section)

Pinion Jump–out Dimension

Connect the “+” cable of battery to terminal S and the “–” cable to terminal M. Turn the switch on, and measure pinion travel dimension in thrust direction from the jump–out position.

In measuring the dimension, pull the pinion out a little in the arrow direction.

Dimension(L): 0.05 mm to 1.5 mm (0.002 in to 0.06 in)

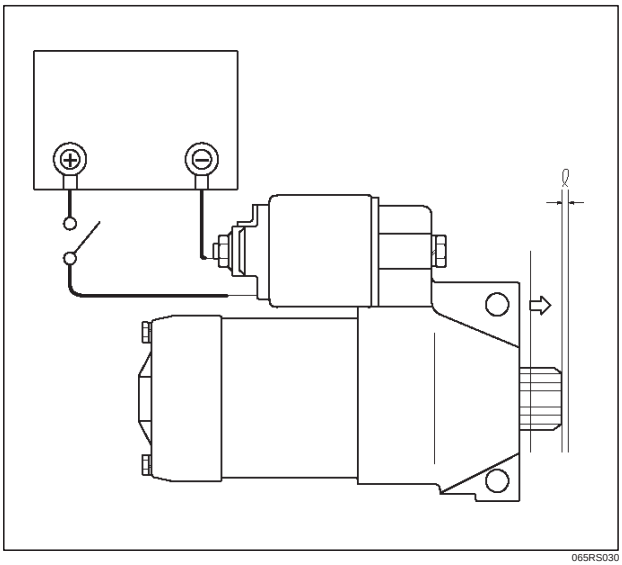

065RS030

Downloaded from www.Manualslib.com manuals search engine

If the measured value is out of standard, insert dust cover, or disassemble and adjust.

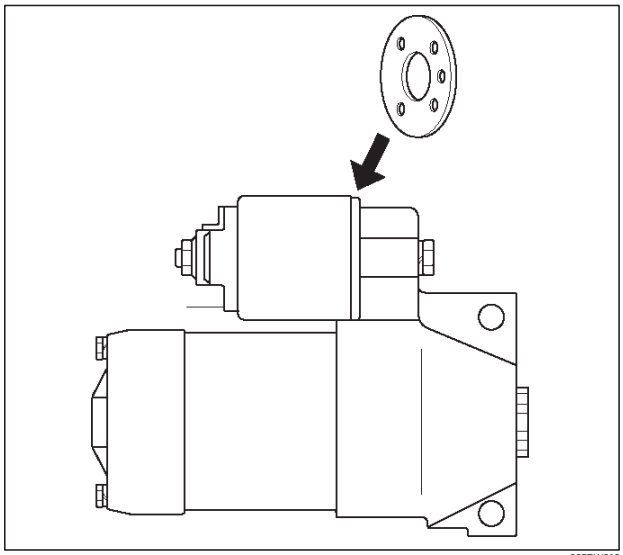

065RW019

Characteristic Test

For easily confirming the characteristics, conduct the no load test as follows:
Rating as short as 30 seconds requires rapid testing.
Fix the starter on the test bench, and wire as shown in illustration. When the switch is closed, the current flows and the starter runs under no load. At this time, measure current, voltage and speed to check if they satisfy the standard.

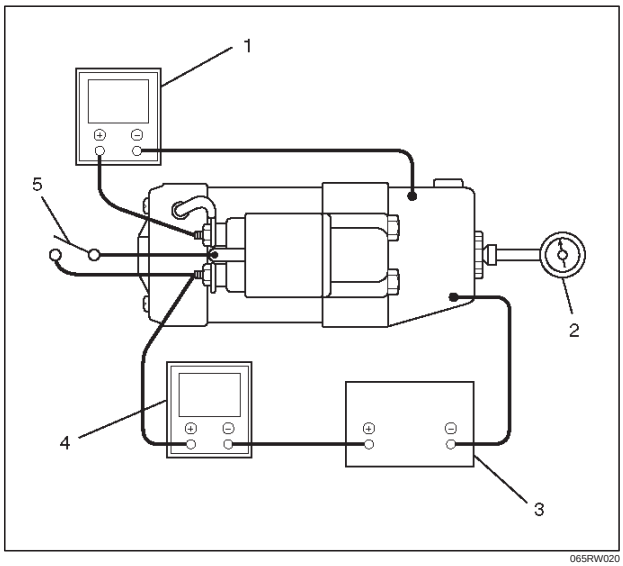

065RW020

Legend

(1) Volt Meter
(2) Tachometer
(3) Battery
(4) Ammeter
(5) Switch

Downloaded from www.Manualslib.com manuals search engine

Main Data and Specifications

General Specifications

Model	HITACHI GD003138
Rating	
Voltage	12 V
Output	1.4 Kw
Time	30 sec
Number of teeth of pinion	9
Rotating direction(as viewed from pinion)	Clockwise
Weight(approx.)	34 N
No load characteristics	
Voltage /Current	11V/90A or less
Speed	2700rpm or more
Load characteristics	
Voltage/current	8.4V/250A
Torque	7.3N·m(64lb·in.) or more
Speed	1200rpm or more
Locking characteristics	
Voltage/current	3V/750A or less
Torque	19N·m(14lb·in) or more

Downloaded from www.Manualslib.com manuals search engine

Torque Specifications

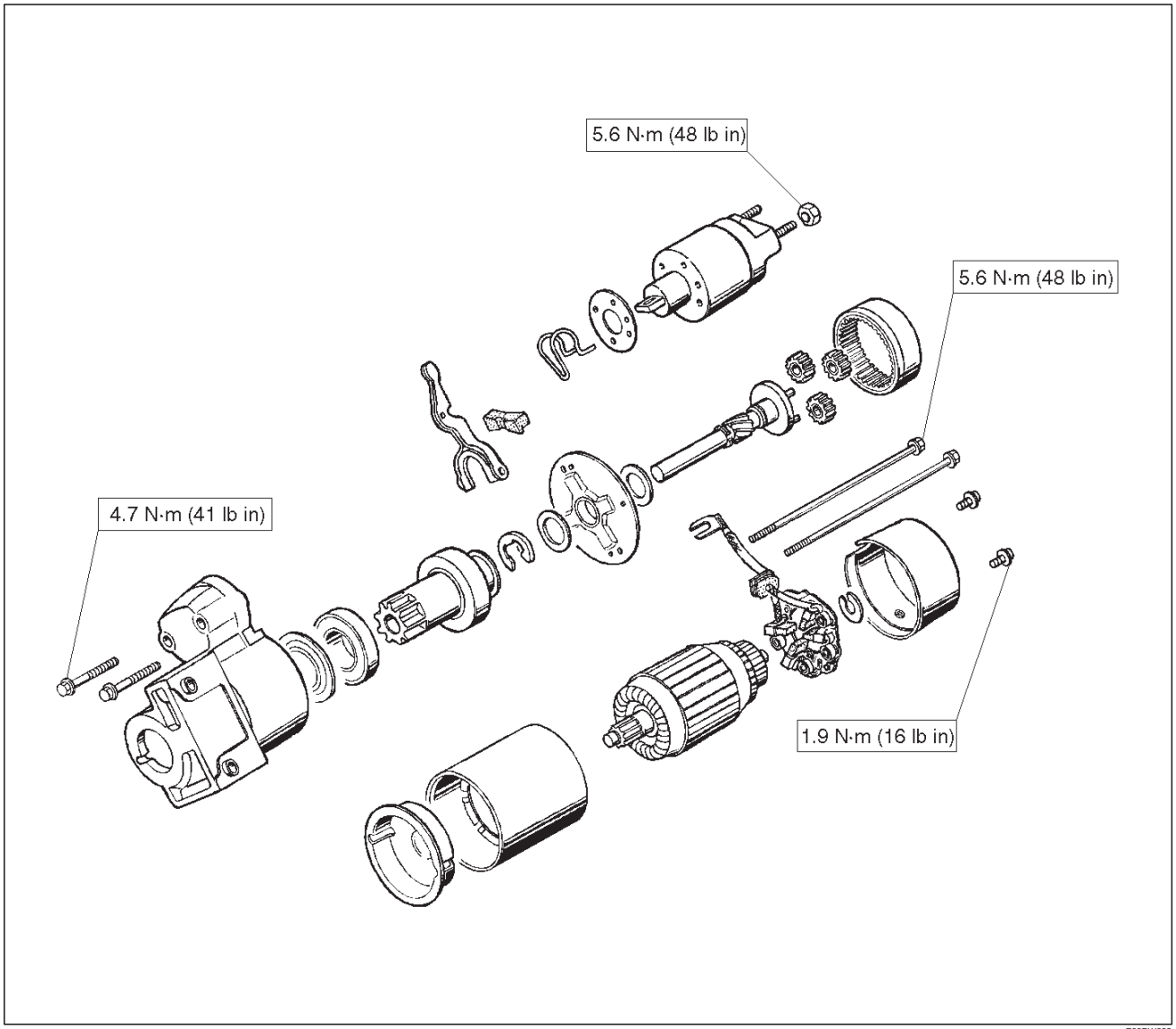

E06RW023

Downloaded from www.Manualslib.com manuals search engine

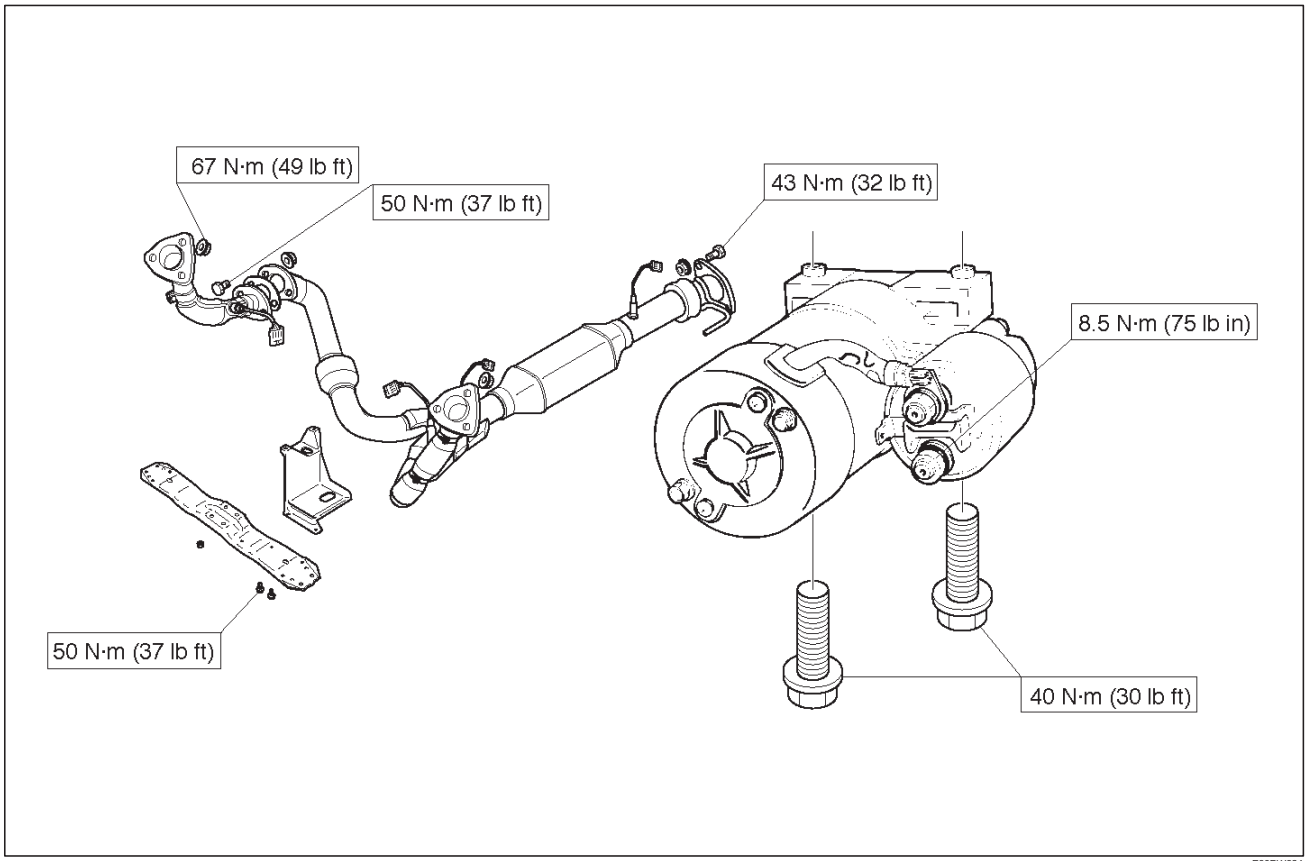

E06RW024

Downloaded from www.Manualslib.com manuals search engine

Charging System

General Description

The IC integral regulator charging system and its main components are connected as shown in the illustration.
The regulator is a solid state type and it is mounted along with the brush holder assembly inside the generator installed on the rear end cover.
The generator does not require particular maintenance such as voltage adjustment.
The rectifier connected to the stator coil has eight diodes to transform AC voltage into DC voltage.
This DC voltage is connected to the output terminal of generator.

General On–Vehicle Inspection

The operating condition of charging system is indicated by the charge warning lamp. The warning lamp comes on when the starter switch is turned to “ON” position. The charging system operates normally if the lamp goes off when the engine starts.
If the warning lamp shows abnormality or if undercharged or overcharged battery condition is suspected, perform diagnosis by checking the charging system as follows:

1. Check visually the belt and wiring connector.
2. With the engine stopped, turn the stator switch to “ON” position and observe the warning lamp.

   If lamp does not come on:

   Disconnect wiring connector from generator, and ground the terminal “L” on connector side.

   If lamp comes on:

   Repair or replace the generator.

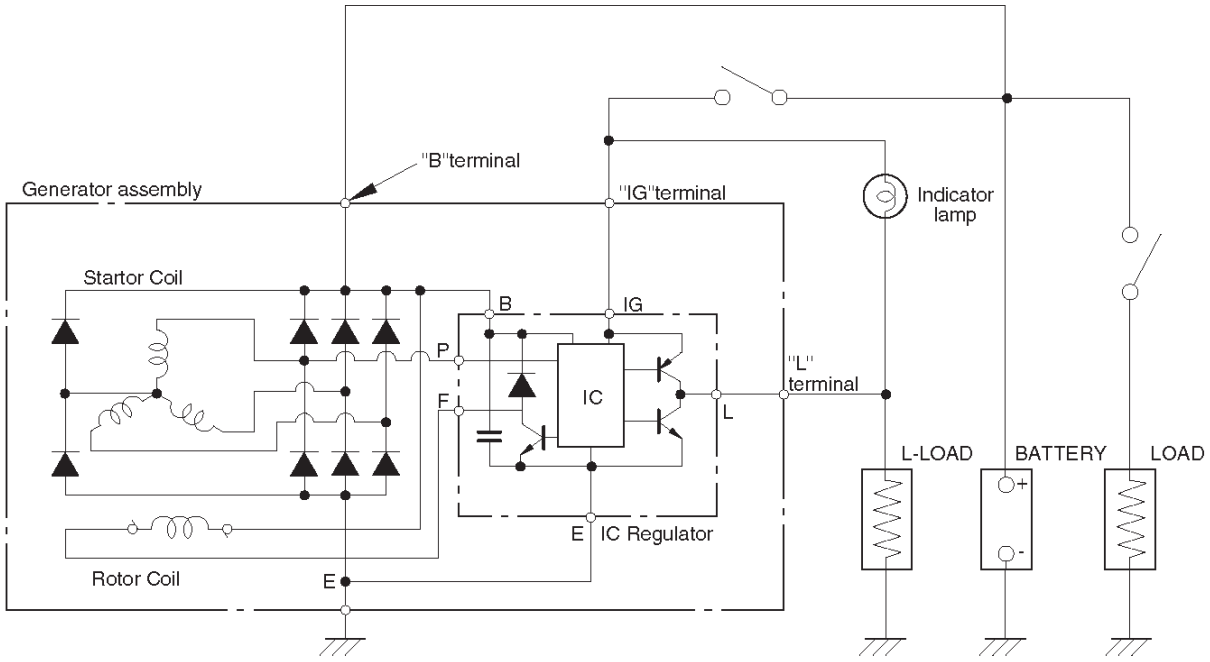

F06RY00002

Downloaded from www.Manualslib.com manuals search engine

Generator

Removal

1. Disconnect battery ground cable.
2. Move drive belt tensioner to loose side using wrench then remove drive belt (1).
3. Disconnect the wire from terminal “B” and disconnect the connector (4).
4. Remove generator fixing bolt (3).
5. Remove generator assembly (2).

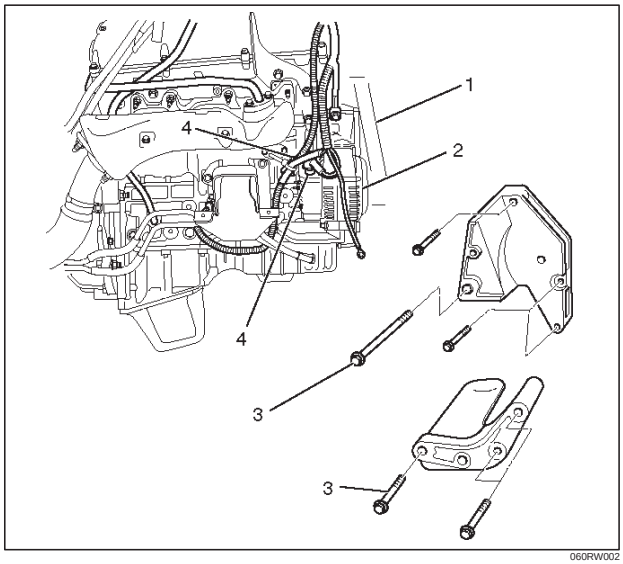

060RW002

Inspection

1. Disconnect the wiring connector from generator.
2. With the engine stopped, turn starter switch to “ON” and connect a voltmeter between connector terminal L (2) and ground or between terminal IG (1) and ground.

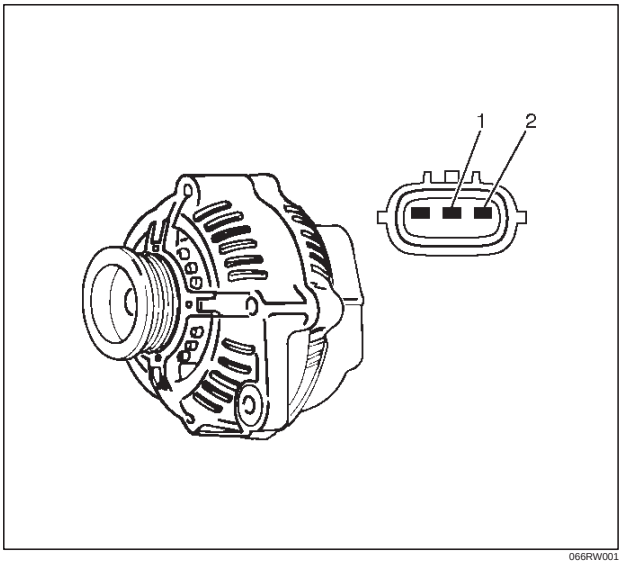

066RW001

If voltage is not present, the line between battery and connector is disconnected and so requires repair.

3. Reconnect the wiring connector to the generator, run the engine at middle speed, and turn off all electrical devices other than engine.
4. Measure battery voltage. If it exceeds 16V, repair or replace the generator.
5. Connect an ammeter to output terminal of generator, and measure output current under load by turning on the other electrical devices (eg., head lights). At this time, the voltage must not be less than 13V.

Installation

1. Install generator assembly to the position to be installed.
2. Install generator assembly and tighten the fixing bolts to the specified torque.

   Torque:

   M10 bolt: 41 N·m (30 lb ft)

   M8 bolt: 21 N·m (15 lb ft)
3. Connect wiring harness connector and direct terminal “B”.
4. Move drive belt tensioner to loose side using wrench, then install drive belt to normal position.
5. Reconnect battery ground cable.

Downloaded from www.Manualslib.com manuals search engine

Disassembled View

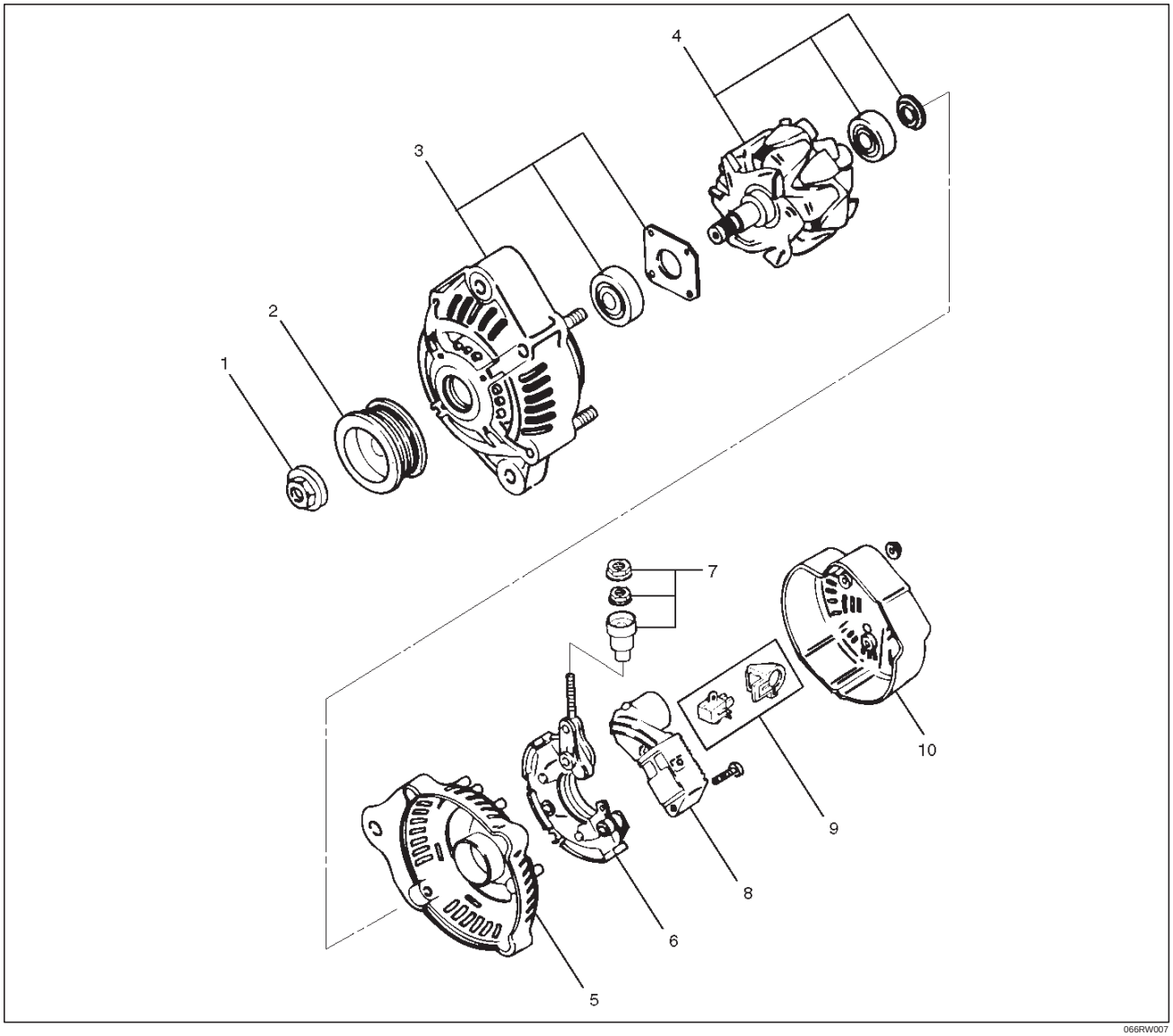

066RW007

Legend

(1) Pulley Nut
(2) Pulley
(3) Front Cover Assembly
(4) Rotor Assembly
(5) Rear End Cover
(6) Rectifier
(7) Terminal Insulator and Nut
(8) Regulator Assembly
(9) Brush Holder Assembly
(10) Rear Cover

Downloaded from www.Manualslib.com manuals search engine

Disassembly

1. Terminal insulator and nut(2).
2. Remove three nuts(1) on the rear cover and a nut on terminal B and insulator, then remove the rear cover(3).

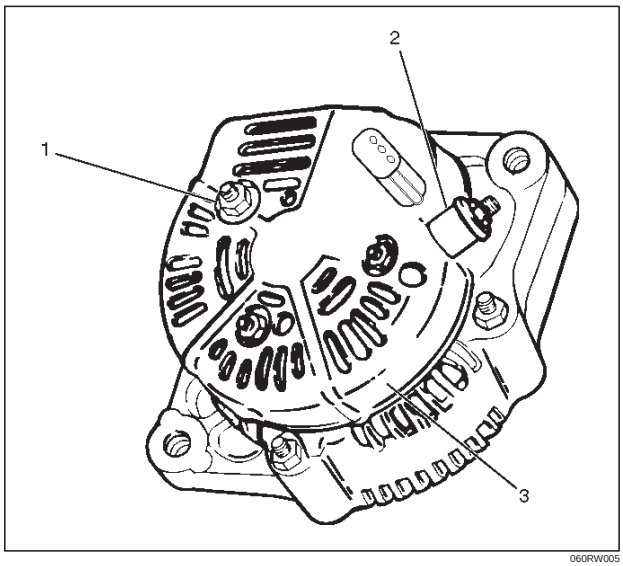

060RW005

3. Remove two screws that fix the brush holder(5) and rectifier, then remove the brush holder assembly(4).

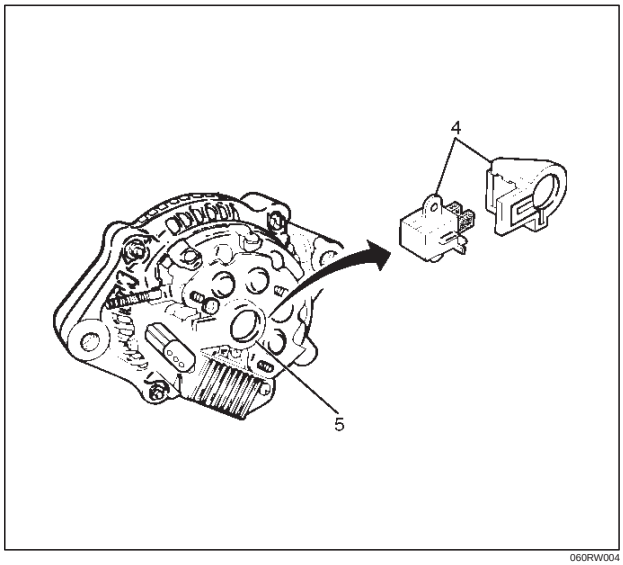

060RW004

4. Remove three screws on the IC regulator, then the IC regulator assembly(6).

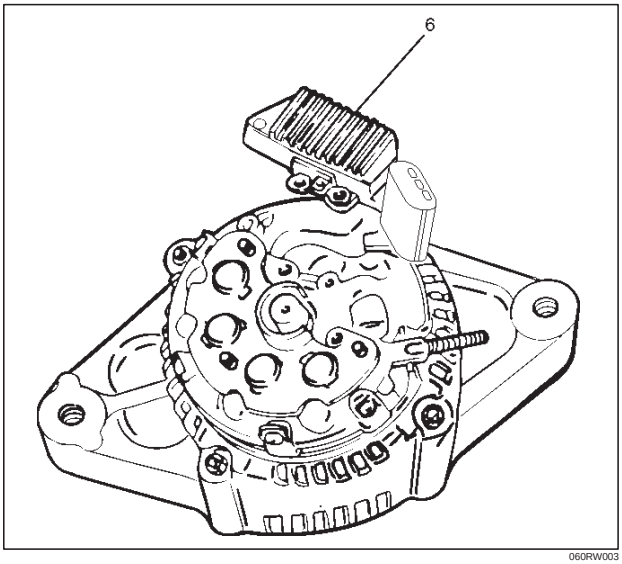

060RW003

5. Remove four screws that fix rectifier(7) and stator lead wires.

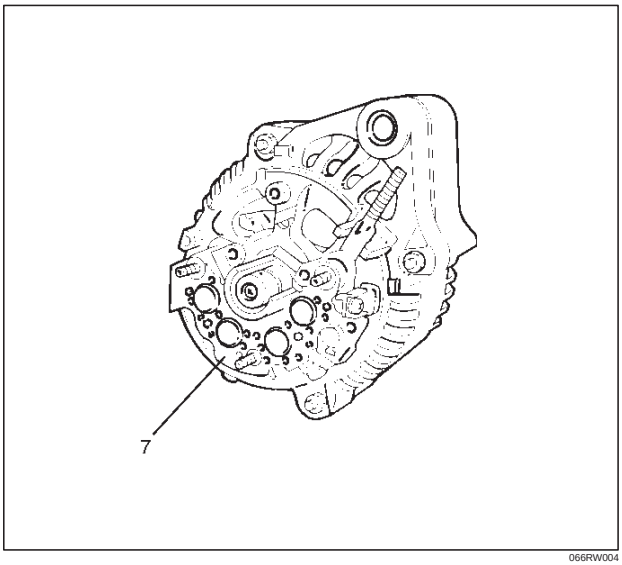

066RW004

Downloaded from www.Manualslib.com manuals search engine

6. Secure the pulley directly in the vise between two copper plates, and remove the nut and pulley.

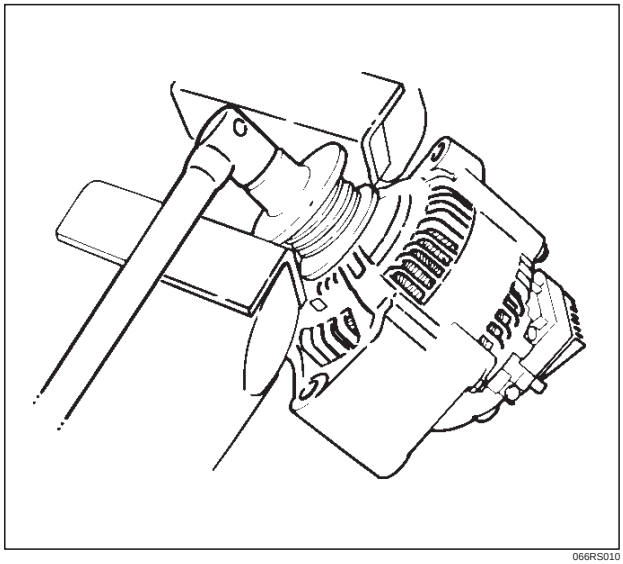

066RS010

7. Remove four nuts(8) that secure the front cover assembly and rear end cover, and an insulator(9).

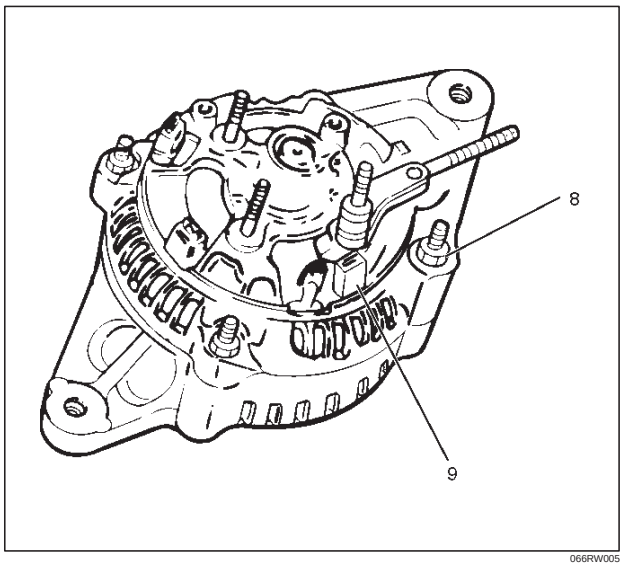

066RW005

8. Use the puller to remove the rear end cover.
9. Rotor assembly

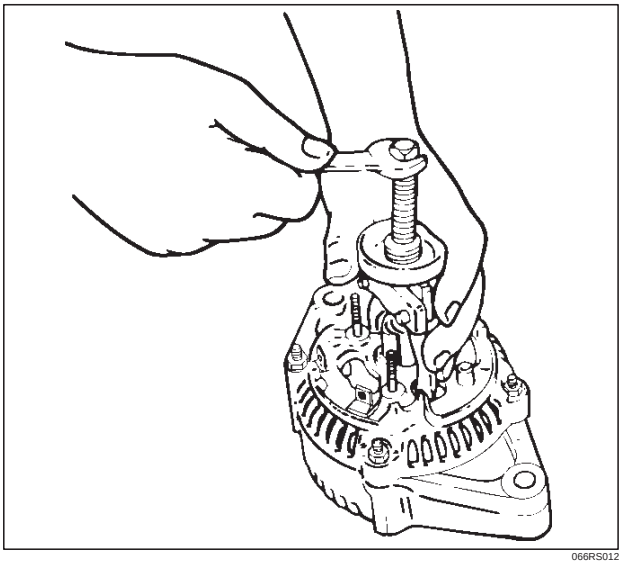

066RS012

10. Pull the rotor assembly(10) off the front cover assembly(12) using a bench press(11).

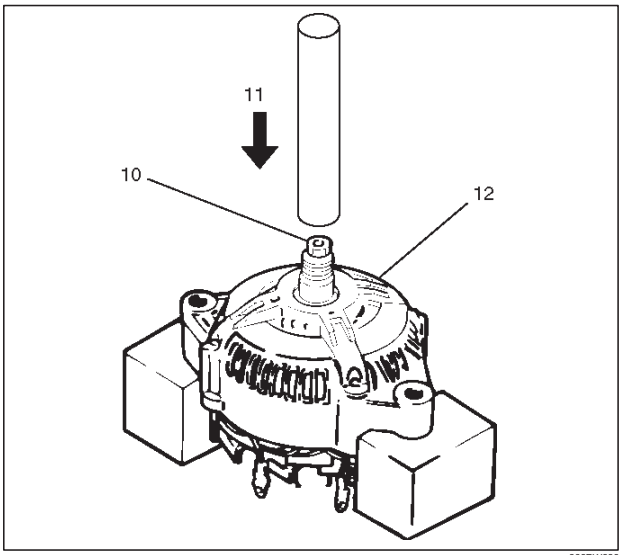

066RW006

Downloaded from www.Manualslib.com manuals search engine

Inspection and Repair

Repair or replace necessary parts if extreme wear or damage is found during inspection.

Rotor Assembly

1. Check the rotor slip ring surfaces for contamination and roughness. If rough, polish with #500—600 sandpaper.

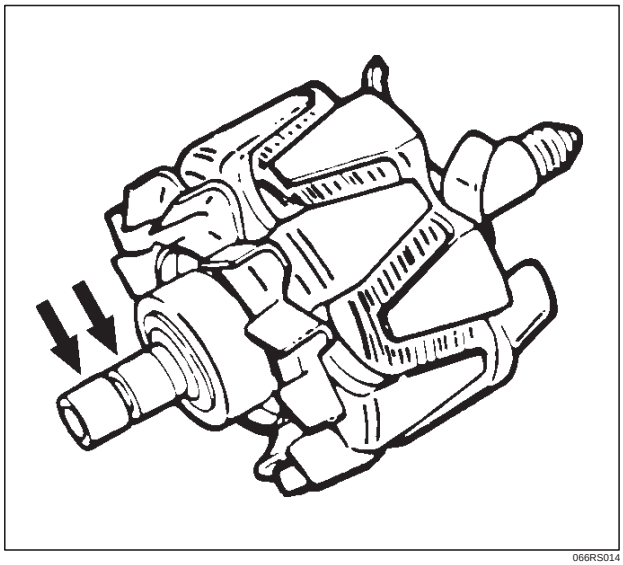

066RS014

2. Measure the slip ring diameter, and replace if it exceeds the limit.

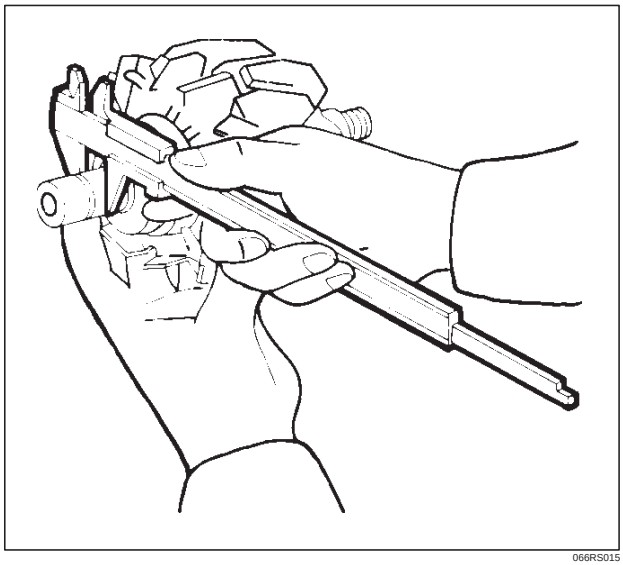

066RS015

3. Check resistance between slip rings, and replace if there is no continuity.

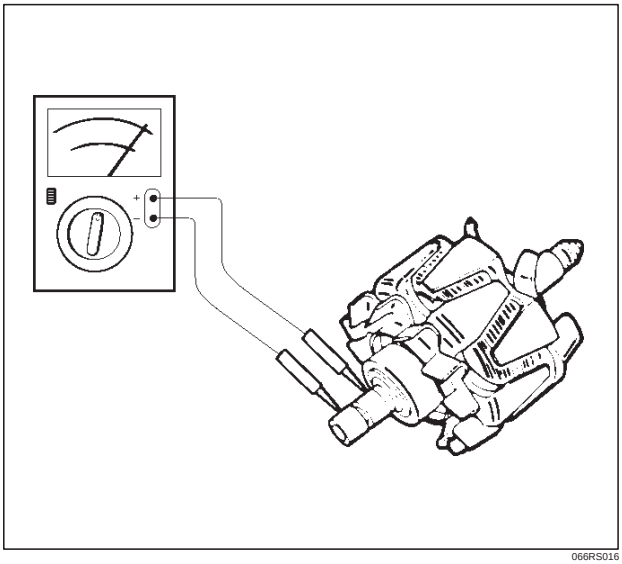

066RS016

4. Check for continuity between slip ring and rotor core. In case of continuity, replace the rotor assembly.

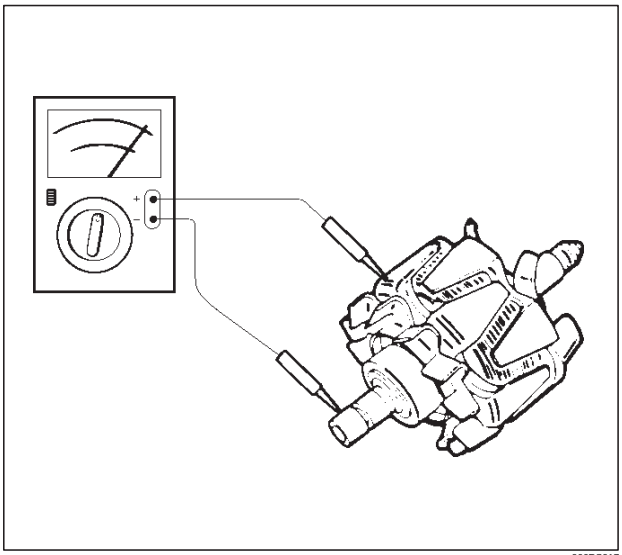

066RS017

Downloaded from www.Manualslib.com manuals search engine

Stator Coil

1. Measure resistance between respective phases.
2. Measure insulation resistance between stator coil and core with a mega–ohmmeter.
   If less than standard, replace the coil.

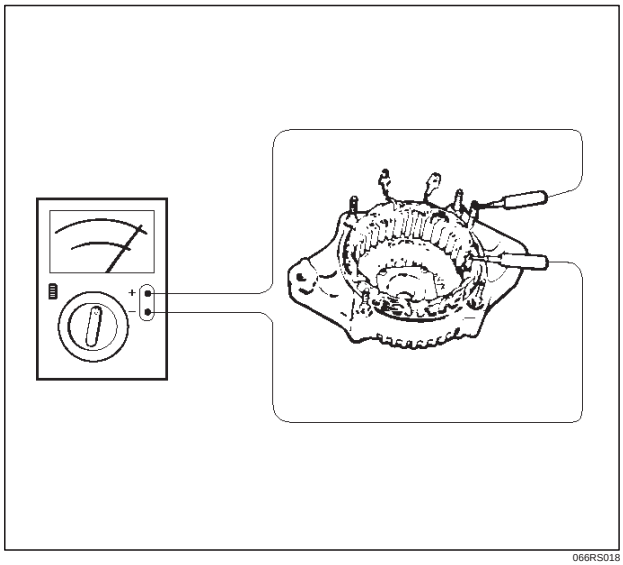

066RS018

Brush

Measure the brush length.
If more than limit, replace the brush.

Standard: 10.mm (0.4134 in)

Limit: 8.4.mm (0.3307 in)

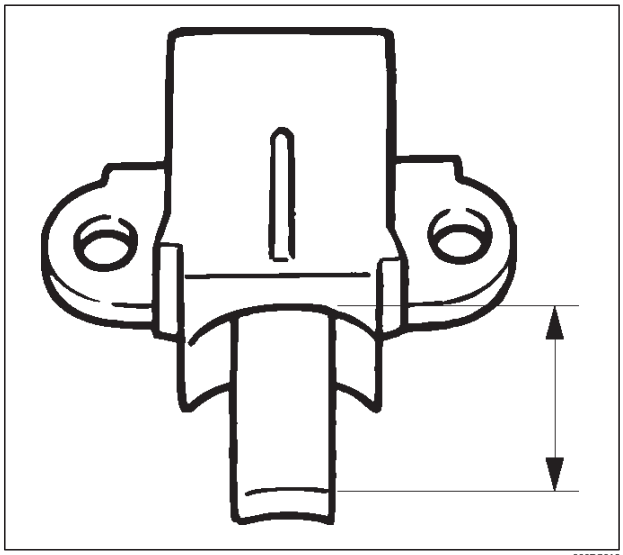

066RS019

Rectifier Assembly

Check for continuity across “P” and “E” in the × 100W range of multimeter.

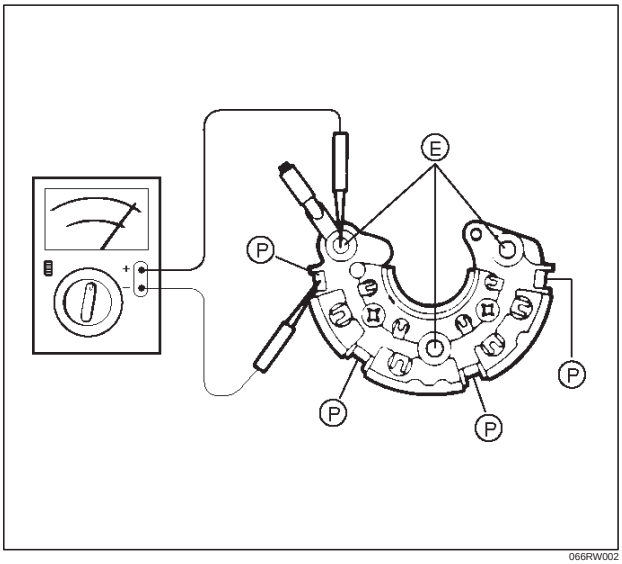

066RW002

Change polarity, and make sure that there is continuity in one direction, and not in the reverse direction. In case of continuity in both directions, replace the rectifier assembly.

IC Regulator Assembly

Check for continuity across “B” and “F” in the × 100W range of multimeter.

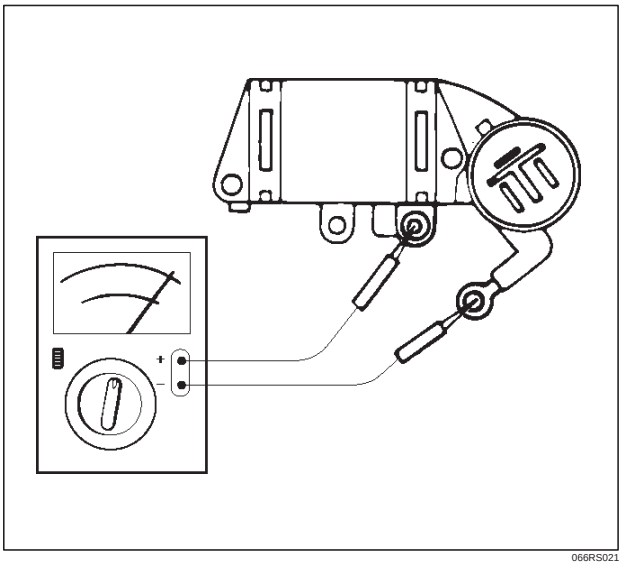

066RS021

Change polarity, and make sure that there is continuity in one direction, and not in the reverse direction. In case of continuity in both directions, replace the IC regulator assembly.

Downloaded from www.Manualslib.com manuals search engine

Reassembly

To reassemble, follow the disassembly steps in the reverse order, noting the following points:

1. Using a press with a socket wrench attached, reassemble rotor and rear end cover assembly in the front cover.

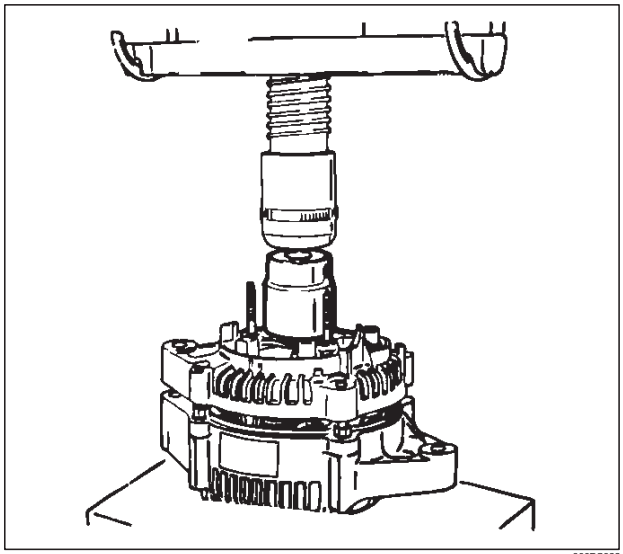

066RS022

2. Install pulley on the rotor.
   Secure the pulley directly in the vise between two copper plates, and tighten nut to the specified torque.

   Torque: 111 N·m (82 lb ft)

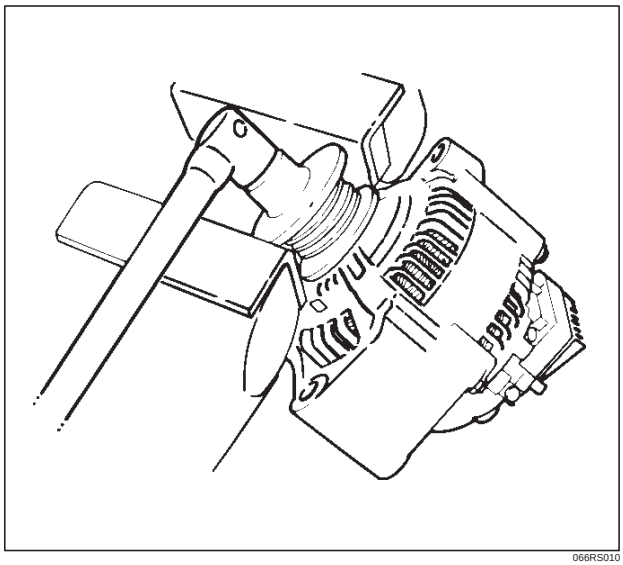

066RS010

Bench Test

Conduct a bench test of the generator.

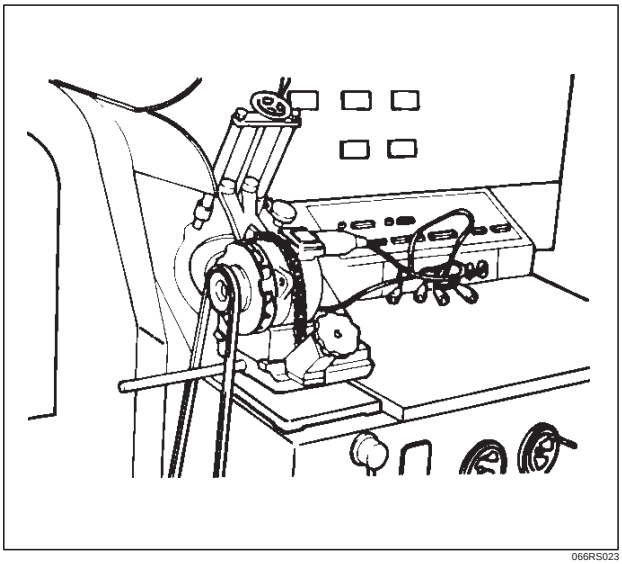

066RS023

Preparation

Remove generator from the vehicle (see “Generator removal”).

1. Secure generator to the bench test equipment and connect wires.
   Terminal “IG” for energization
   Terminal “L” for neutral (warning lamp)
   Terminal “B” for output
2. Conduct the generator characteristic test.
   Characteristics of generator are shown in illustration.
   Repair or replace the generator if its outputs are abnormal.

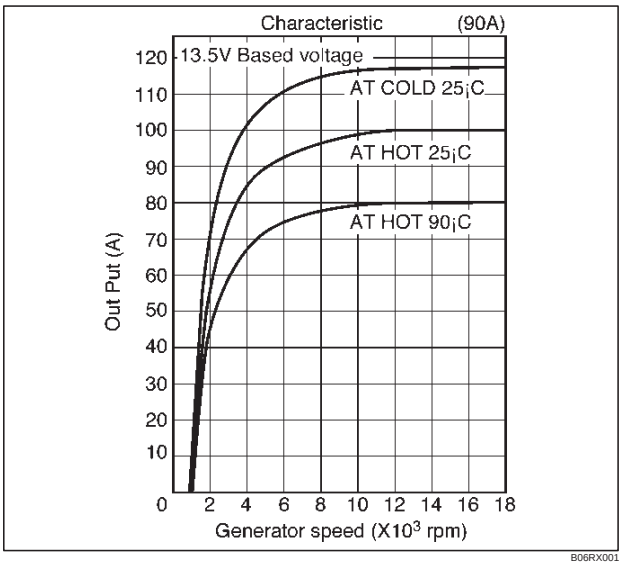

B06RX001

Downloaded from www.Manualslib.com manuals search engine

Main Data and Specifications

General Specifications

Parts Number (Nippon denso)	102211—1740
Model	ACJV74
Rated voltage	12 V
Rated output	90 A
Rotating direction (As viewed from pulled)	Clockwise
Pulley effective diameter	57.5 mm (2.26 in)
Weight	49.7 N (11.2 lb)

Downloaded from www.Manualslib.com manuals search engine

TROOPER

ENGINE

TROOPER 3.5L ENGINE DRIVEABILITY AND EMISSIONS

CONTENTS

Specifications 6E–6
Tightening Specifications 6E–6
Diagrams and Schematics 6E–7
PCM Wiring Diagram (1 of 7) 6E–7
PCM Wiring Diagram (2 of 7) 6E–8
PCM Wiring Diagram (3 of 7) 6E–9
PCM Wiring Diagram (4 of 7) 6E–10
PCM Wiring Diagram (5 of 7) 6E–11
PCM Wiring Diagram (6 of 7) 6E–12
PCM Wiring Diagram (7 of 7) 6E–13
PCM Pinouts 6E–14
PCM Pinout Table, 80-Way Blue Connector – Row “F1 ~ 20” 6E–14
PCM Pinout Table, 80-Way Blue Connector – Row “F20 ~ 40” 6E–16
PCM Pinout Table, 80-Way Blue Connector – Row “F41 ~ 60” 6E–18
PCM Pinout Table, 80-Way Blue Connector – Row “F61 ~ 80” 6E–20
PCM Pinout Table, 80-Way Red Connector – Row “S1 ~ 20” 6E–22
PCM Pinout Table, 80-Way Red Connector – Row “S21 ~ 40” 6E–24
PCM Pinout Table, 80-Way Red Connector – Row “S41 ~ 60” 6E–26
PCM Pinout Table, 80-Way Red Connector – Row “S61 ~ 80” 6E–28
Component Locators 6E–30
Engine Component Locator Table 6E–31
Undercarriage Component Locator 6E–32
Undercarriage Component Locator Table . 6E–32
Fuse and Relay Panel (Underhood Electrical Center) 6E–33
Sensors and Miscellaneous Component Locators 6E–34
Diagnosis 6E–37
Strategy-Based Diagnostics 6E–37
Strategy-Based Diagnostics 6E–37
DTC Stored 6E–37
No DTC 6E–37
No Matching Symptom 6E–37
Intermittents 6E–37
No Trouble Found 6E–37
Verifying Vehicle Repair 6E–37
General Service Information 6E–38
OBD II Serviceablity Issues 6E–38
Emissions Control Information Label 6E–38
Visual / Physical Engine Compartment Inspection 6E–38
Basic Knowledge of Tools Required 6E–39
Serial Data Communications 6E–39
Class II Serial Data Communications 6E–39
On-Board Diagnostic (OBD II) 6E–39
On-Board Diagnostic Tests 6E–39
Comprehensive Component Monitor Diagnostic Operation 6E–39
System Status and Drive Cycle for Satisfying Federal Inspection/Maintenance (I/M 240) Regulations 6E–40
Common OBD II Terms 6E–40
The Diagnostic Executive 6E–40
DTC Types 6E–41
Decimal/Binary/Hexadecimal Conversions 6E–43
Verifying Vehicle Repair 6E–43
Reading Diagnostic Trouble Codes Using The Tech 2 Scan Tool 6E–43
Tech 2 . . . . . 6E–44
Tech 2 Features 6E–45
Getting Started 6E–45
Operating Procedure (For Example) 6E–46
DTC Modes 6E–47
DTC Information Mode 6E–47
Miscellaneous Test 6E–48
Lamps Test 6E–48
Relays Test 6E–50
EVAP Test 6E–51
Fuel System Test 6E–52
Instruments Test 6E–54
EGR Control Test 6E–56
Variable Intake Manifold Solenoid Test . . . 6E–56
Injector Balance Test 6E–58
Plottong Snapshot Graph 6E–58
Plotting Graph Flow Chart (Plotting graph after obtaining vehicle information) 6E–59
Flow Chart for Snapshot Replay (Plotting Graph) 6E–60
Primary System-Based Diagnostic 6E–61
Primary System-Based Diagnostic 6E–61
Fuel Control Heated Oxygen Sensor 6E–61
HO2S Heater 6E–61
Catalyst Monitor Heated Oxygen Sensors and Diagnostic Operation 6E–61
Evaporative Emission (EVAP) Purge System Vacuum Switch 6E–62
Misfire Monitor Diagnostic Operation 6E–62
Misfire Monitor Diagnostic Operation 6E–62
Misfire Counters 6E–62

Downloaded from www.Manualslib.com manuals search engine

Fuel Trim System Monitor Diagnostic Operation 6E–63
Fuel Trim System Monitor Diagnostic Operation 6E–63
Fuel Trim Cell Diagnostic Weights 6E–63
On-Board Diagnostic (OBD II) System Check 6E–64
Circuit Description 6E–64
Diagnostic Aids 6E–64
Test Description 6E–64
A/C Clutch Control Circuit Diagnosis 6E–67
Circuit Description 6E–67
Diagnostic Aids 6E–67
A/C Clutch Diagnosis 6E–68
Electronic Ignition System Diagnosis 6E–72
EVAP Canister Purge Solenoid and EVAP Vacuum Switch 6E–72
Visual Check of The Evaporative Emission Canister 6E–72
Fuel Metering System Check 6E–72
Fuel System Pressure Test 6E–72
Fuel Injector Coil Test Procedure and Fuel Injector Balance Test Procedure 6E–72
Test Description 6E–72
Injector Coil Test Procedure (Steps 1-6) and Injector Balance Test Procedure (Steps 7-11) 6E–73
Powertrain Control Module (PCM) Diagnosis 6E–77
Multiple PCM Information Sensor DTCs Set 6E–77
Circuit Description 6E–77
Diagnostic Aids 6E–77
Exhaust Gas Recirculation (EGR) Diagnosis 6E–81
Engine Tech 2 Data Definitions and Ranges 6E–81
Typical Scan Data Values 6E–83
Test Conditions 6E–83
3.5L V-6 Engine (Automatic and Manual Transmission) 6E–84
No Malfunction Indicator Lamp (MIL) 6E–89
Circuit Description 6E–89
Diagnostic Aids 6E–89
Malfunction Indicator Lamp (MIL) “ON” Steady 6E–92
Circuit description 6E–92
Diagnostic Aids 6E–92
No Reduced Power Lamp (RPL) 6E–94
Circuit Description 6E–94
Diagnostic Aids 6E–94
Test Description 6E–94
Reduced Power Lamp (RPL) “ON” Steady . . 6E–97
Circuit Description 6E–97
Diagnostic Aids 6E–97
Test Description 6E–97
Engine Cranks But Will Not Run 6E–99
Circuit Description 6E–101
Diagnostic Aids 6E–101
Test Description 6E–101
Fuel System Electrical Test 6E–106
Circuit Description 6E–107
Diagnostic Aids 6E–107
Test Description 6E–107
Fuel Pressure Relief Procedure 6E–107
Electric Throttle Control (ETC) System Check 6E–110
Circuit Description 6E–111
Diagnostic Aids 6E–111
Test Description 6E–111
Fuel System Diagnosis 6E–114
Circuit Description 6E–114
Test Description 6E–114
Fuel Pressure Relief Procedure 6E–115
Exhaust Gas Recirculation (EGR) System Check 6E–119
Circuit Description 6E–119
Manifold Absolute Pressure (MAP) Output Check 6E–121
Circuit Description 6E–121
Evaporative (EVAP) Emissions Canister Purge Valve Check 6E–123
Circuit Description 6E–123
Diagnostic Aids 6E–123
Upshift Lamp System Check (Manual Transmission Only) 6E–126
Circuit Description 6E–127
Diagnostic Aids 6E–127
PCM Diagnostic Trouble Codes 6E–129
PCM Diagnostic Trouble Codes 6E–129
P0101 MAF System Performance 6E–133
P0102 MAF Sensor Circuit Low Frequency 6E–136
P0103 MAF Sensor Circuit High Frequency . 6E–139
P0106 MAP System Performance 6E–142
P0107 MAP Sensor Circuit Low Voltage 6E–145
P0108 MAP Sensor Circuit High Voltage . . . 6E–148
P0112 IAT Sensor Circuit Low Voltage 6E–151
P0113 IAT Sensor Circuit High Voltage 6E–154
P0117 ECT Sensor Circuit Low Voltage 6E–157
P0118 ECT Sensor Circuit High Voltage 6E–160
P0125 ECT Excessive Time to Closed Loop Fuel Control 6E–163
P0128 Thermostat Insufficient temperrature for Stable Opreation 6E–166
P0131 HO2S Circuit Low Voltage Bank 1 Sensor 1 . . . . . 6E–169
P0132 HO2S Circuit High Voltage Bank 1 Sensor 1 . . . . . 6E–172
P0133 HO2S Slow Response Bank 1 Sensor 1 . . . . . 6E–175
P0134 HO2S Circuit Insufficient Activity Bank 1 Sensor 1 . . . . . 6E–179
P0135 HO2S Heater Circuit Bank 1 Sensor 1 6E–182

Downloaded from www.Manualslib.com manuals search engine

P0137 HO2S Circuit Low Voltage Bank 1 Sensor 2 . . . . . 6E–185
P0138 HO2S Circuit High Voltage Bank 1 Sensor 2 . . . . . 6E–188
P0140 HO2S Circuit Insufficient Activity Bank 1 Sensor 2 . . . . . 6E–191
P0141 HO2S Heater Circuit Bank 1 Sensor 2 . . . . . 6E–194
P0151 HO2S Circuit Low Voltage Bank 2 Sensor 1 . . . . . 6E–197
P0152 HO2S Circuit HIGH Voltage Bank 2 Sensor 1 . . . . . 6E–200
P0153 HO2S Slow Response Bank 2 Sensor 1 . . . . . 6E–203
P0154 HO2S Circuit Insufficient Activity Bank 2 Sensor 1 . . . . . 6E–207
P0155 HO2S Heater Circuit Bank 2 Sensor 1 . . . . . 6E–210
P0157 HO2S Circuit Low Voltage Bank 2 Sensor 2 . . . . . 6E–213
P0158 HO2S Circuit High Voltage Bank 2 Sensor 2 . . . . . 6E–216
P0160 HO2S Circuit Insufficient Activity Bank 2 Sensor 2 . . . . . 6E–219
P0161 HO2S Heater Circuit Bank 2 Sensor 2 . . . . . 6E–222
P0171 Fuel Trim System Lean Bank 1 . . . . . 6E–225
P0172 Fuel Trim System Rich Bank 1 . . . . . 6E–229
P0174 Fuel Trim System Lean Bank 2 . . . . . 6E–233
P0175 Fuel Trim System Rich Bank 2 . . . . . 6E–237
P0201 Injector 1 Control Circuit 6E–241
P0202 Injector 2 Control Circuit 6E–244
P0203 Injector 3 Control Circuit 6E–247
P0204 Injector 4 Control Circuit 6E–250
P0205 Injector 5 Control Circuit 6E–253
P0206 Injector 6 Control Circuit 6E–256
P0300 Engine Misfire Detected 6E–259
P0301 Cylinder Misfire Detected 6E–263
P0302 Cylinder Misfire Detected 6E–265
P0303 Cylinder Misfire Detected 6E–267
P0304 Cylinder Misfire Detected 6E–269
P0305 Cylinder Misfire Detected 6E–271
P0306 Cylinder Misfire Detected 6E–273
P0325 ION Sensing Module/ION Sensing Knock Intensity Circuit Fault 6E–275
P0336 58X Reference Signal Circuit 6E–278
P0337 CKP Sensor Circuit Low Frequency . 6E–281
P0341 CMP Sensor Circuit Performance . . . 6E–284
P0342 CMP Sensor Circuit Low 6E–288
P0351 Ignition 1 Control Circuit 6E–292
P0352 Ignition 2 Control Circuit 6E–295
P0353 Ignition 3 Control Circuit 6E–298
P0354 Ignition 4 Control Circuit 6E–301
P0355 Ignition 5 Control Circuit 6E–304
P0356 Ignition 6 Control Circuit 6E–307
P0401 EGR Flow Insufficient 6E–310
P0402 EGR Pintle Crank Error 6E–313
P0404 EGR Open Stuck 6E–315
P0405 EGR Low Voltage 6E–317
P0406 EGR High Voltage 6E–320
P0420 TWC System Low Efficiency Bank 1 . 6E–323
P0430 TWC System Low Efficiency Bank 2 . 6E–326
P0440 EVAP System 6E–329
P0442 EVAP System Small Leak Detected . 6E–332
P0446 EVAP Canister Vent Blocked 6E–335
P0452 Fuel Tank Pressure Sensor (Vapor Pressure Sensor) Low Voltage 6E–338
P0453 Fuel Tank Pressure Sensor (Vapor Pressure Sensor) High Voltage 6E–341
P0456 EVAP Very Small Leak 6E–344
P0462 Fuel Level Sensor Circuit–Low Voltage 6E–347
P0463 Fuel Level Sensor Circuit–High Voktage 6E–350
P0502 VSS Circuit Low Input 6E–352
P0506 Idle Air Control System Low RPM . . . 6E–355
P0507 Idle Air Control System High RPM . . . 6E–358
P0562 System Voltage Low 6E–361
P0563 System Voltage High 6E–363
P0601 PCM Memory 6E–365
P0602 PCM Programming Error 6E–367
P0604 PCM RAM Error 6E–369
P0606 PCM Internal Performance 6E–371
P1106 MAP Sensor Circuit Intermittent High Voltage 6E–373
P1107 MAP Circuit Intermittent Low Voltage 6E–375
P1111 IAT Sensor Circuit Intermittent High Voltage 6E–377
P1112 IAT Sensor Circuit Intermittent Low Voltage 6E–380
P1114 ECT Sensor Circuit Intermittent Low Voltage 6E–382
P1115 ECT Sensor Circuit Intermittent High Voltage 6E–384
P1120-TPS 1 Throttle Position Sensor (TPS1) Circuit Fault 6E–387
P1125 ETC (Electric Throttle Control) Limit Performance Mode 6E–390
P1133 HO2S Insufficient Switching Bank 1 Sensor 1 . . . . . 6E–393
P1134 HO2S Transition Time Ratio Bank 1 Sensor 1 . . . . . 6E–397
P1153 HO2S Insufficient Switching Bank 2 Sensor 1 . . . . . 6E–401
P1154 HO2S Circuit Transition Time Ratio Bank 2 Sensor 1 . . . . . 6E–405
P1167 Fuel System Rich During Decel Fuel Cut Off (Bank 1) 6E–409

Downloaded from www.Manualslib.com manuals search engine

P1169 Fuel System Rich During Decel Fuel Cut Off (Bank 2) 6E–411
P1171 Fuel System Lean During Acceleration 6E–413
P1220 Throttle Position Senser2 (TPS2) Circuit Fault 6E–416
P1221 TPS1 – TPS2 correlation (Circuit Performance) 6E–419
P1271 APS 1– 2 Correlation Error 6E–422
P1272 APS 2 – 3 Correlation Error 6E–425
P1273 APS 1 – 3 Correlation Error 6E–428
P1275 APS 1 Circuit Fault 6E–431
P1280 APS 2 Circuit Fault 6E–433
P1285 APS 3 Circuit Fault 6E–435
P1290 ETC Forced Idle Mode 6E–437
P1295 Power Management Mode 6E–440
P1299 ETC Forced Engine Shutdown Mode 6E–444
P1310 ION Sensing Module Diagnosis 6E–448
P1311 ION Sensing Module SEC line 1 Circuit Fault 6E–452
P1312 ION Sensing Module SEC line 2 Circuit Fault 6E–455
P1326 ION Sensing Module Combustion Quality Input Circuit Fault 6E–458
P1340 ION Sensing Module Cylinder ID Fault (Cylinder Synchronization Fail) 6E–461
P1404 EGR Stuck Closed 6E–464
P1441 EVAP System Flow During Non-Purge 6E–467
P1514 TPS - MAF Correlation Error 6E–470
P1515 Command - Actual TPS Correlation Error 6E–474
P1516 Command - Actual TPS Correlation Error 6E–477
P1523 Actuator Control Return Performance 6E–480
P1625 PCM Unexpected Reset 6E–483
P1635 Reference Voltage # 1 Circuit Fault . . 6E–484
P1639 Reference Voltage # 2 Circuit Fault . . 6E–486
P1640 Driver-1-Output Circuit Fault (ODM) . 6E–488
P1650 Quad Driver Module “A” Fault 6E–491
Symptom Diagnosis 6E–494
Default Matrix Table 6E–523
Default Matrix Table 6E–523
On-Vehicle ServiceCamshaft Position (CMP) Sensor 6E–526
Crankshaft Position (CKP) Sensor 6E–527
Engine Coolant Temperature (ECT) Sensor . 6E–527
Heated Oxygen Sensor (HO2S) 6E–528
Intake Air Temperature (IAT) Sensor 6E–531
ION Sensing Module 6E–531
Mass Air Flow (MAF) Sensor 6E–532
Manifold Absolute Pressure (MAP) Sensor . 6E–533
Malfunction Indicator Lamp (MIL) 6E–534
Reduced Power Lamp 6E–534
Powertrain Control Module (PCM) 6E–534
Service Precaution 6E–534
Removal Procedure 6E–534
Installation Procedure 6E–535
EEPROM 6E–535
Throttle Position (TP) Sensor 6E–536
Vehicle Speed Sensor (VSS) 6E–536
Air Cleaner/Air Filter 6E–538
Common Chamber 6E–538
Accelerator Pedal Replacement 6E–539
Fuel Filler Cap 6E–540
Fuel Filter 6E–540
Fuel Gauge Unit 6E–542
Fuel Injectors 6E–543
Fuel Metering System 6E–544
Fuel Pump Assembly 6E–545
Fuel Pump Relay 6E–545
Fuel Rail Assembly 6E–546
Fuel Tank 6E–547
Throttle Body (TB) 6E–549
Electronic Ignition System 6E–551
Catalytic Converter 6E–552
Air Conditioning Thermo Relay 6E–552
EVAP Canister Hoses 6E–552
EVAP Canister 6E–553
EVAP Canister Vent Solenoid 6E–554
Fuel Tank Pressure Sensor 6E–555
EVAP Canister Purge Solenoid 6E–555
Fuel Tank Vent Valve 6E–556
Linear Exhaust Gas Recirculation (EGR) Valve 6E–556
Positive Crankcase Ventilation (PCV) Valve . 6E–557
PCV Valve 6E–557
Wiring and Connectors 6E–558
PCM Connectors and Terminals 6E–558
Wire Harness Repair: Twisted Shielded Cable 6E–558
Twisted Leads 6E–559
Weather-Pack Connector 6E–561
Com-Pack III 6E–562
Metri-Pack 6E–562
General Description (PCM and Sensors) . . . 6E–563
58X Reference PCM Input 6E–563
A/C Request Signal 6E–563
Crankshaft Position (CKP) Sensor 6E–563
Camshaft Position (CMP) Sensor and Signal 6E–563
Engine Coolant Temperature (ECT) Sensor 6E–563
Electrically Erasable Programmable Read Only Memory (EEPROM) 6E–564
Fuel Control Heated Oxygen Sensors 6E–564
Catalyst Monitor Heated Oxygen Sensors 6E–564
Intake Air Temperature (IAT) Sensor 6E–565
Linear Exhaust Gas Recirculation (EGR) Control 6E–565

Downloaded from www.Manualslib.com manuals search engine

Mass Air Flow (MAF) Sensor 6E–565
Manifold Absolute Pressure (MAP) Sensor 6E–565
Powertrain Control Module (PCM) 6E–566
PCM Function 6E–566
PCM Components 6E–566
PCM Voltage Description 6E–566
PCM Input/Outputs 6E–567
PCM Service Precautions 6E–567
Reprogramming The PCM 6E–567
Throttle Position (TP) Sensor 6E–567
Transmission Fluid Temperature (TFT) Sensor 6E–567
Transmission Range Switch 6E–567
Vehicle Speed Sensor (VSS) 6E–568
Use of Circuit Testing Tools 6E–568
Aftermarket Electrical and Vacuum Equipment 6E–568
Electrostatic Discharge Damage 6E–568
Upshift Lamp 6E–568
General Description (Air Induction) 6E–568
Air Induction System 6E–568
General Description (Fuel Metering) 6E–569
Acceleration Mode 6E–569
Battery Voltage Correction Mode 6E–569
CMP Signal 6E–569
Clear Flood Mode 6E–569
Deceleration Mode 6E–569
Engine Speed/Vehicle Speed/Fuel Disable Mode 6E–569
Fuel Cutoff Mode 6E–569
Fuel Injector 6E–569
Fuel Metering System Components 6E–569
Fuel Metering System Purpose 6E–570
Fuel Pressure Regulator 6E–570
Fuel Pump Electrical Circuit 6E–570
Fuel Rail 6E–570
Run Mode 6E–571
Starting Mode 6E–571
Throttle Body Unit 6E–571
General Description (Electronic Ignition System) 6E–571
Camshaft Position (CMP) Sensor 6E–571
Crankshaft Position (CKP) Sensor 6E–571
Electronic Ignition 6E–572
Ignition Coils 6E–572
Ignition Control 6E–572
Ignition Control PCM Output 6E–573
Powertrain Control Module (PCM) 6E–573
Spark Plug 6E–574
A/C Clutch Diagnosis 6E–575
A/C Clutch Circuit Operation 6E–575
A/C Clutch Circuit Purpose 6E–575
A/C Request Signal 6E–575
General Description (Evaporative (EVAP) Emission System) 6E–576
EVAP Emission Control System Purpose . 6E–576
EVAP Emission Control System Operation 6E–576
Enhanced Evaporative Emission Control System 6E–576
General Description (Exhaust Gas Recirculation (EGR) System) 6E–579
EGR Purpose 6E–579
Linear EGR Valve 6E–580
Linear EGR Control 6E–580
Linear EGR Valve Operation and Results of Incorrect Operation 6E–580
EGR Pintle Position Sensor 6E–580
General Description (Positive Crankcase Ventilation (PCV) System) 6E–580
Crankcase Ventilation System Purpose . . . 6E–580
Crankcase Ventilation System Operation . 6E–580
Special Tools 6E–582

Downloaded from www.Manualslib.com manuals search engine

Specifications

Tightening Specifications

Application	N·m	Lb Ft.	Lb In.
Camshaft Position Sensor Retaining Screw	9	—	78
Crankshaft Position Sensor Mounting Bolt	9	—	78
EGR Bolt	25	18	—
Engine Coolant Temperature Sensor	30	22	—
Fuel Drain Plug	20	14	—
Fuel Pressure Regulator Attaching Screw	3	—	26
Fuel Rail Bolts	25	18	—
Fuel Tank Undercover Retaining Bolts	36	27	—
Heated Oxygen Sensor	55	40	—
Lower Intake Manifold to Engine Block Bolts	25	18	—
Lower Intake Manifold to Engine Block Nuts	25	18	—
Spark Plugs	18	13	—
Throttle Body Mounting Bolts	10	—	87
Common Chamber to Lower Intake Manifold Bolts	25	18	—
VSS Retaining Bolt	16	12	—

Downloaded from www.Manualslib.com manuals search engine

Diagrams and Schematics

PCM Wiring Diagram (1 of 7)

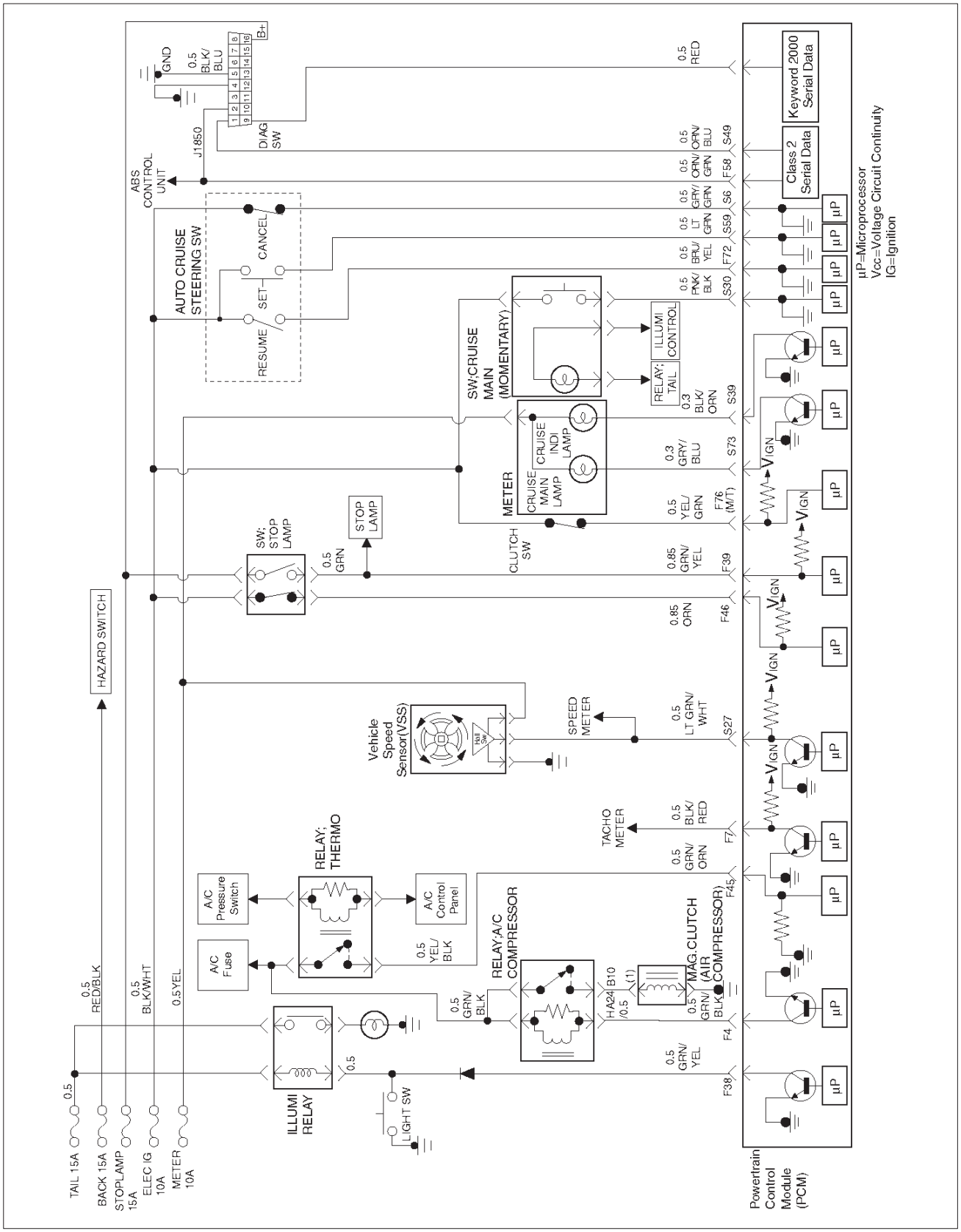

Downloaded from www.Manualslib.com manuals search engine

PCM Wiring Diagram (2 of 7)

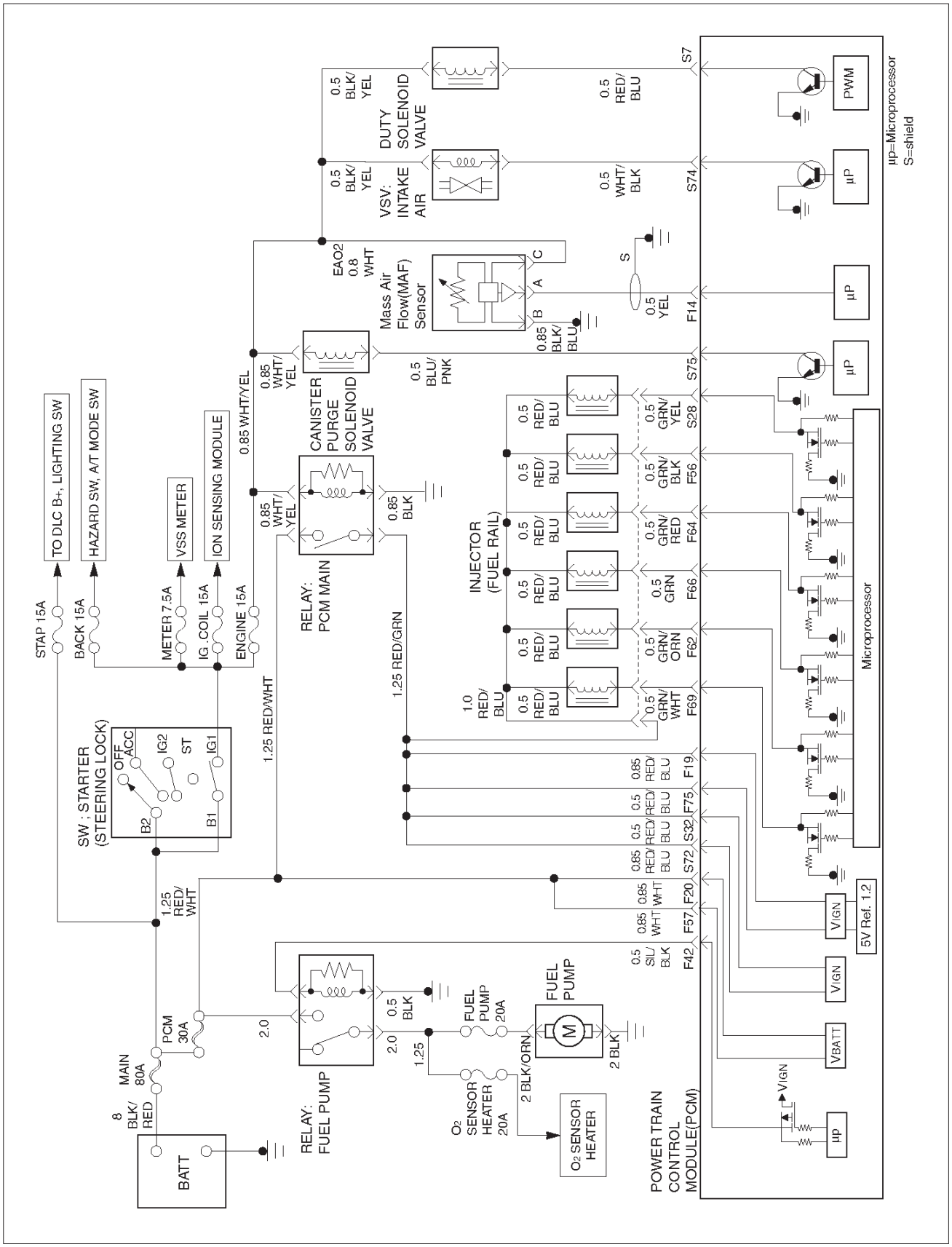

D06RY00150

Downloaded from www.Manualslib.com manuals search engine

PCM Wiring Diagram (3 of 7)

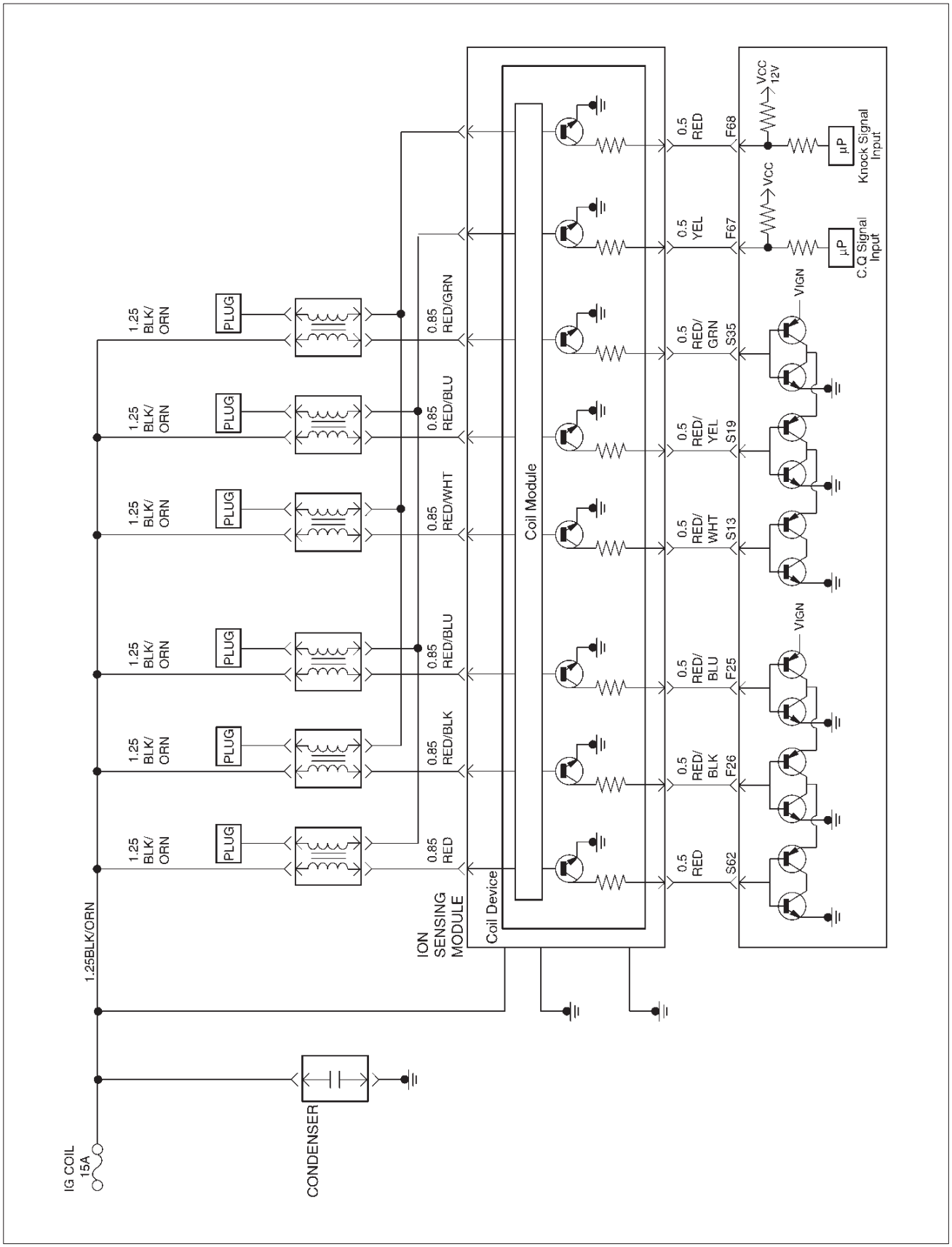

D06RY00042

Downloaded from www.Manualslib.com manuals search engine

PCM Wiring Diagram (4 of 7)

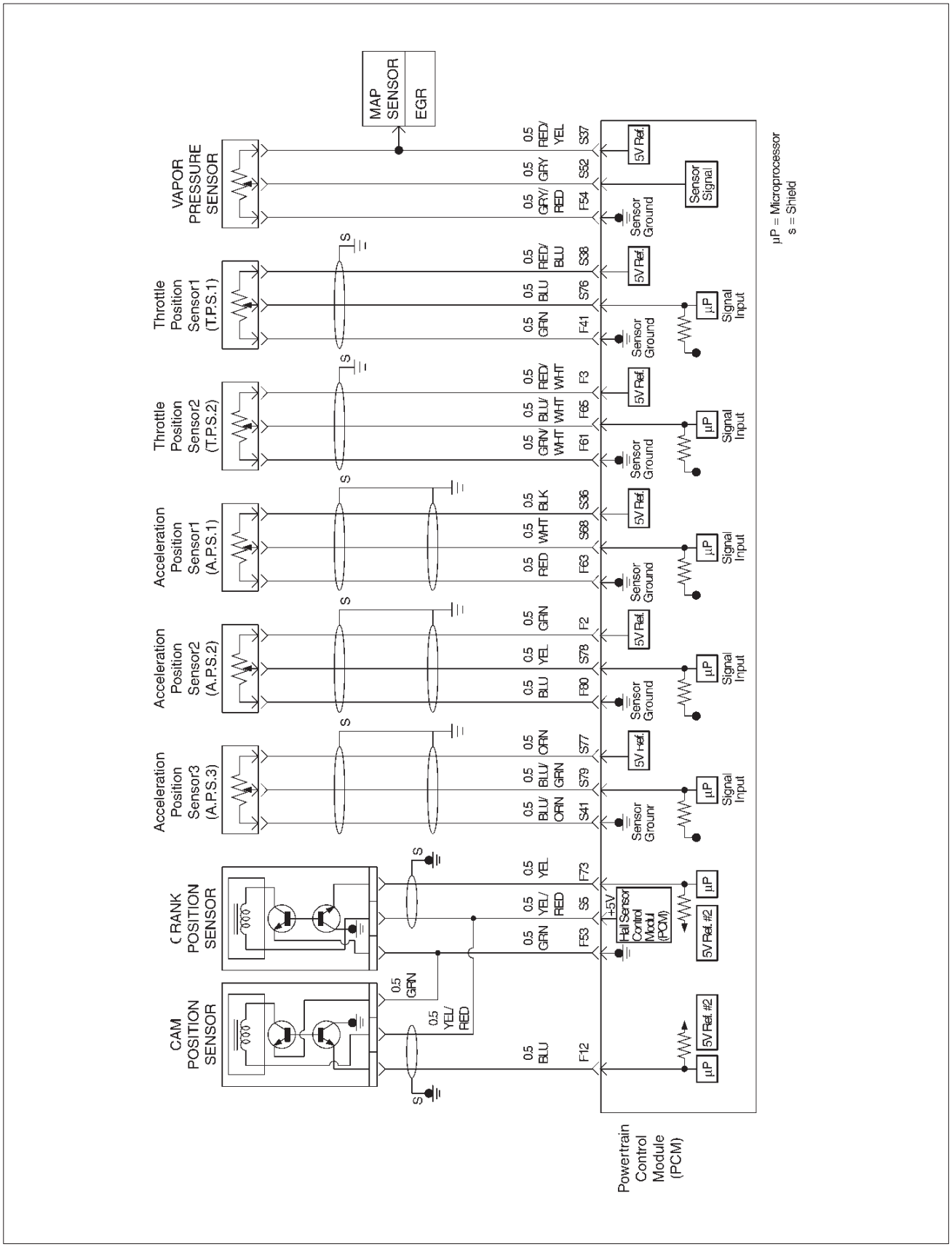

D06RY00044

Downloaded from www.Manualslib.com manuals search engine

PCM Wiring Diagram (5 of 7)

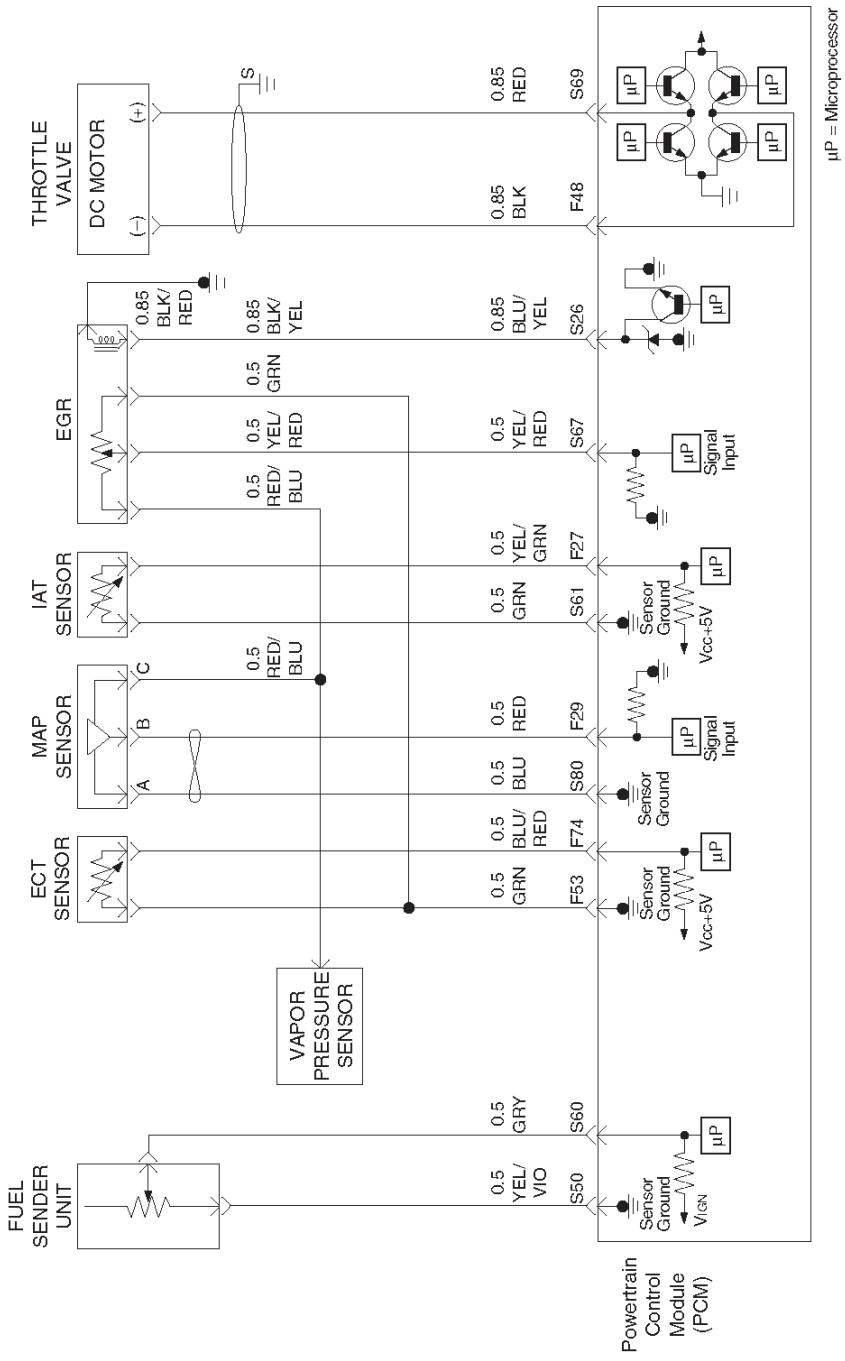

D06RY00149

Downloaded from www.Manualslib.com manuals search engine

PCM Wiring Diagram (6 of 7)

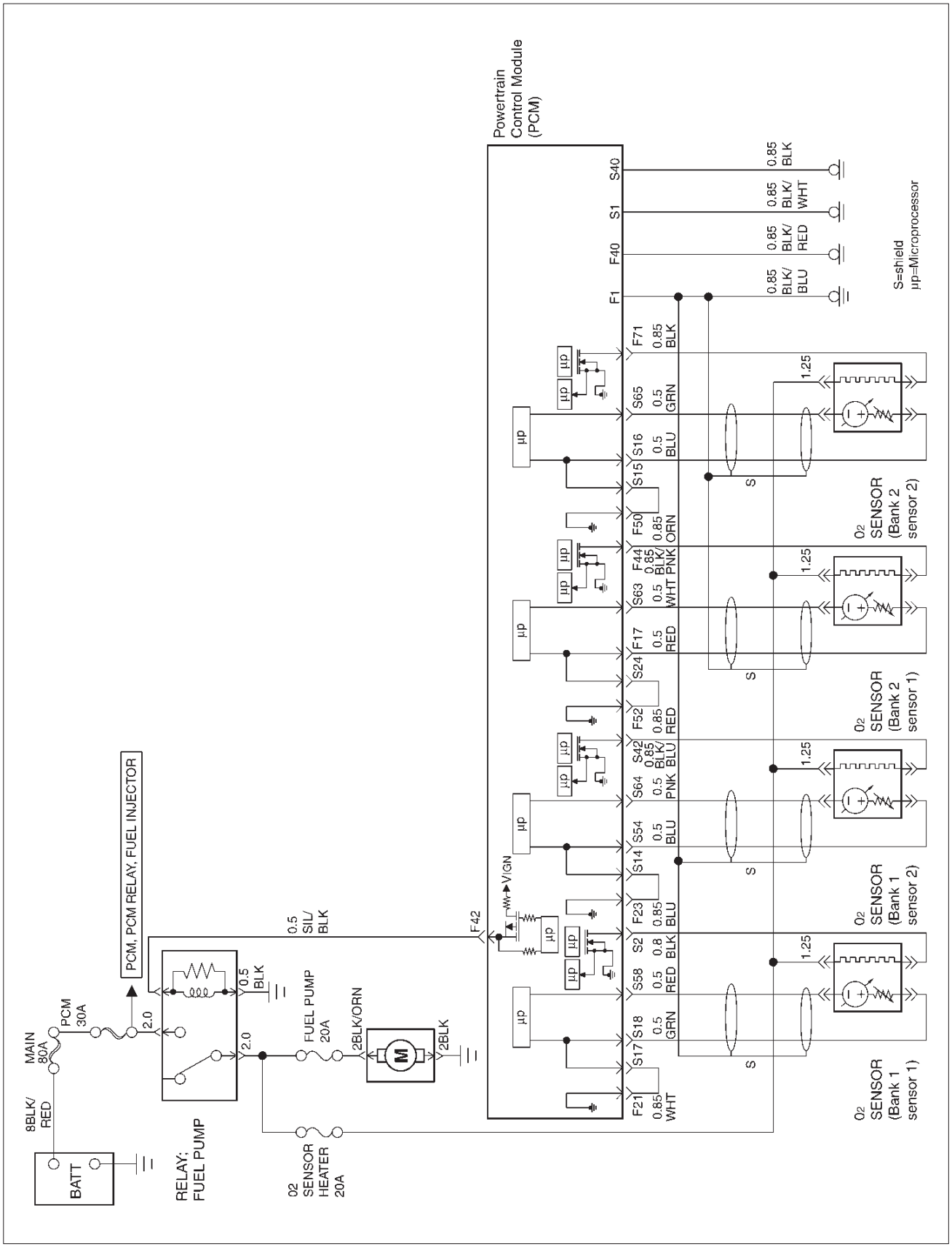

D06RY00115

Downloaded from www.Manualslib.com manuals search engine

PCM Wiring Diagram (7 of 7)

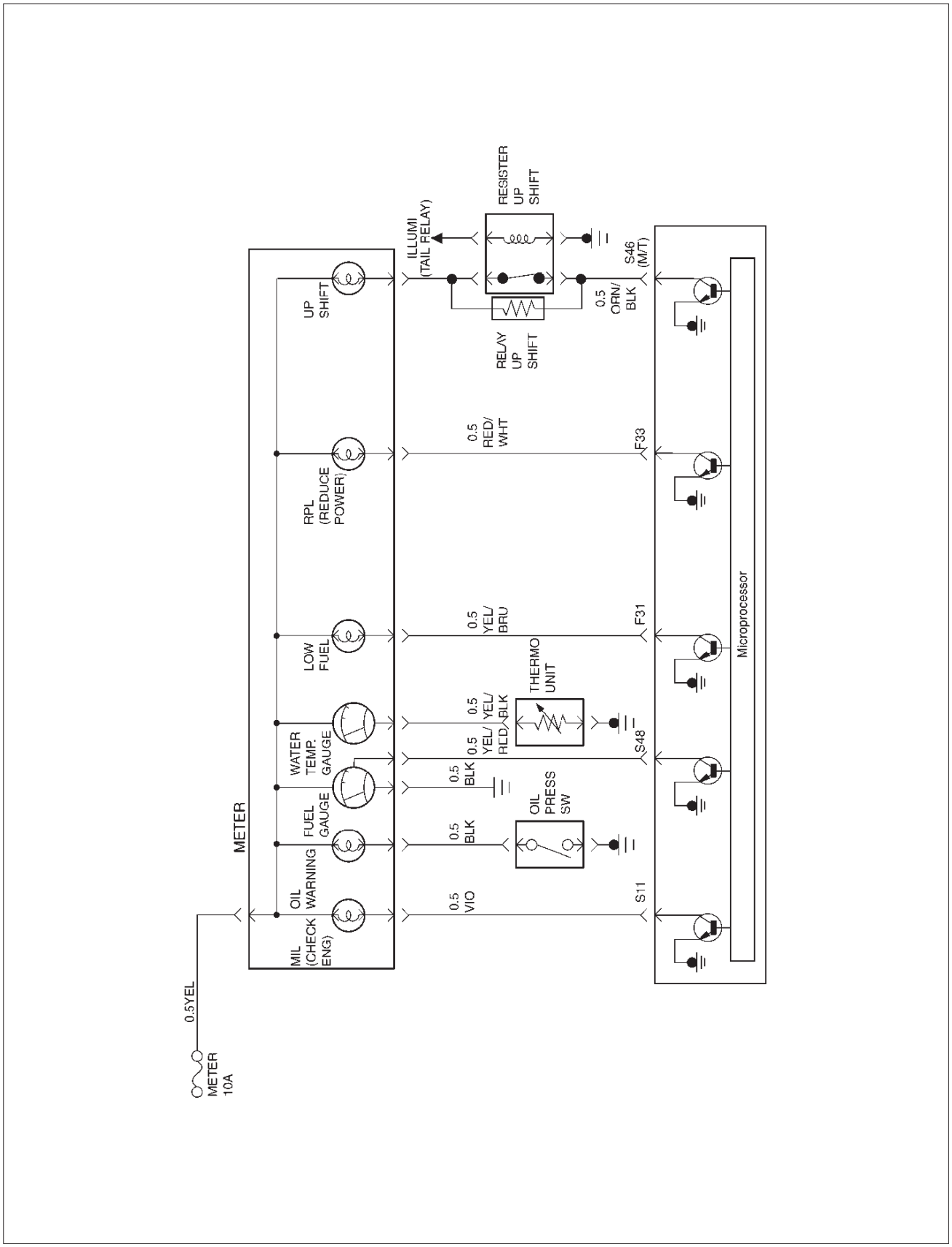

D06RY00127

Downloaded from www.Manualslib.com manuals search engine

PCM Pinouts

PCM Pinout Table, 80-Way Blue Connector – Row “F1 ~ 20”

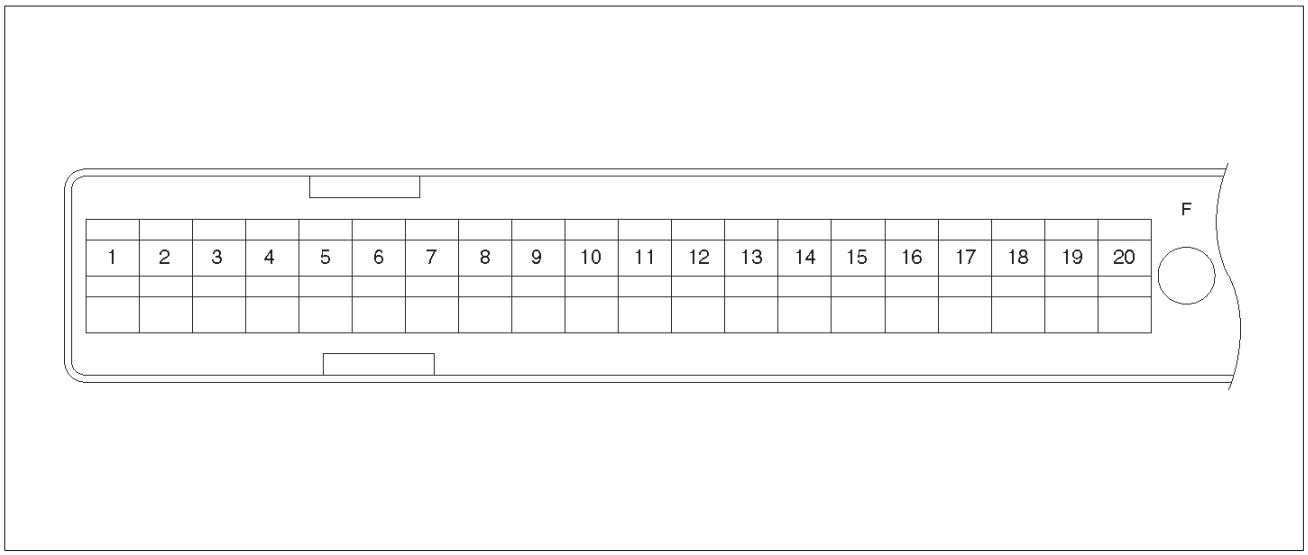

060RY00045

PIN	PIN Function	Wire Color	IGN ON	ENG RUN	Refer To
F1	PCM Ground	BLK/BLU	0.0V	0.0V	Chassis Electrical
F2	5Volt Referrence“2” (AP Sensor 2)	GRN	5.0V	5.0V	AP Sensor
F3	5Volt Referrence“2” (TP Sensor 2)	RED/WHT	5.0V	5.0V	AP Sensor
F4	A/C Clutch	GRN/BLK	B+(A/C off)	B+(A/C off)	General Description and Operation,A/C Cluch Circuit Opreation
F5	Mission Main Case	GRN/RED	0.0V	0.0V	4L30E T/Mission
F6	Not Used	—	—	—	—
F7	Tachometer	BLK/RED	8.8V	10.0V(at idle)	Chassis Electrical
F8	Not Used	—	—	—	—
F9	Not Used	—	—	—	—
F10	Not Used	—	—	—	—
F11	Not Used	—	—	—	—
F12	Camshaft Position Sensor	WHT/RED	5.0V or less than 1.0V	4.6V	General Description and Operation,Camshaft Position Sensor
F13	Not Used	—	—	—	—
F14	Mass Air Flow(MAF)	BLK/BLU	4.9V	4.2V	General Description, Mass Air Flow Sensor
F15	Not Used	—	—	—	—
F16	Not Used	—	—	—	—
F17	Bank 1 HO2S Low	RED	0.0V	0.1V	General Description and Operation, Catalyst Monitor HO2S 2
F18	Not Used	—	—	—	—

Downloaded from www.Manualslib.com manuals search engine

PIN	PIN Function	Wire Color	IGN ON	ENG RUN	Refer To
F19	Ignition Feed	RED/GRN	B+	B+	6D Section
F20	Ignition Feed	RED/WHT	B+	B+	6D Section

Downloaded from www.Manualslib.com manuals search engine

PCM Pinout Table, 80-Way Blue Connector – Row “F20 ~ 40”

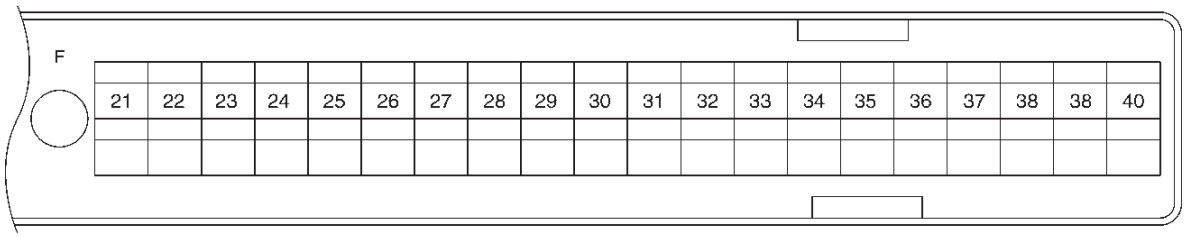

060RY00156

PIN	PIN Function	Wire Color	IGN ON	ENG RUN	Refer To
F21	Bank 1 HO2S 1 Ground	WHT	0.0V	0.0V	General Description and Operation, Catalyst Monitor HO2S 1
F22	Not Used	—	—	—	—
F23	Bank 2 HO2S 1 Ground	BLU	0.0V	0.0V	General Description and Operation, Catalyst Monitor HO2S 1
F24	Not Used	—	—	—	—
F25	ION Sensing Module	RED/BLU	1.555V	1.555V	General Description and Operation,ION Sensing Module
F26	ION Sensing Module	RED/BLK	1.555V	1.555V	General Description and Operation,ION Sensing Module
F27	Intake Air Temperature (IAT)Sensor	YEL/GRN	0.5–4.9V	0.5–4.9V	General Description and Operation, IAT
F28	Not Used	—	—	—	—
F29	Manifold Absolute Pressure(MAP)	RED	3.5V–4.9V (depends on altitude and barometric pressure)	0.6-1.3V	General Description and Operation, Manifold Absolute Pressure
F30	Not Used	—	—	—	—
F31	Low Fuel Lamp	YEL/BRN	B+	B+	Chassis Electrical
F32	Power Lamp	GRN/WHT	B+	B+	4L30E T/Mission
F33	Reduse Power Lamp	RED/WHT	B+	B+	Chassis Electrical
F34	Not Used	—	—	—	—
F35	Not Used	—	—	—	—
F36	Not Used	—	—	—	—
F37	Power Steering Pressure (PSP)	GRN/YEL	B+	B+	Power Steering
F38	Illuminated Switch	GRN/YEL	B+	B+	Chassis Electrical

Downloaded from www.Manualslib.com manuals search engine

PIN	PIN Function	Wire Color	IGN ON	ENG RUN	Refer To
F39	Brake Swich	GRN/YEL	0.0V	0.0V	4L30E T/Mission
F40	PCM Ground	BLK/RED	0.0V	0.0V	Chassis Electrical

Downloaded from www.Manualslib.com manuals search engine

PCM Pinout Table, 80-Way Blue Connector – Row “F41 ~ 60”

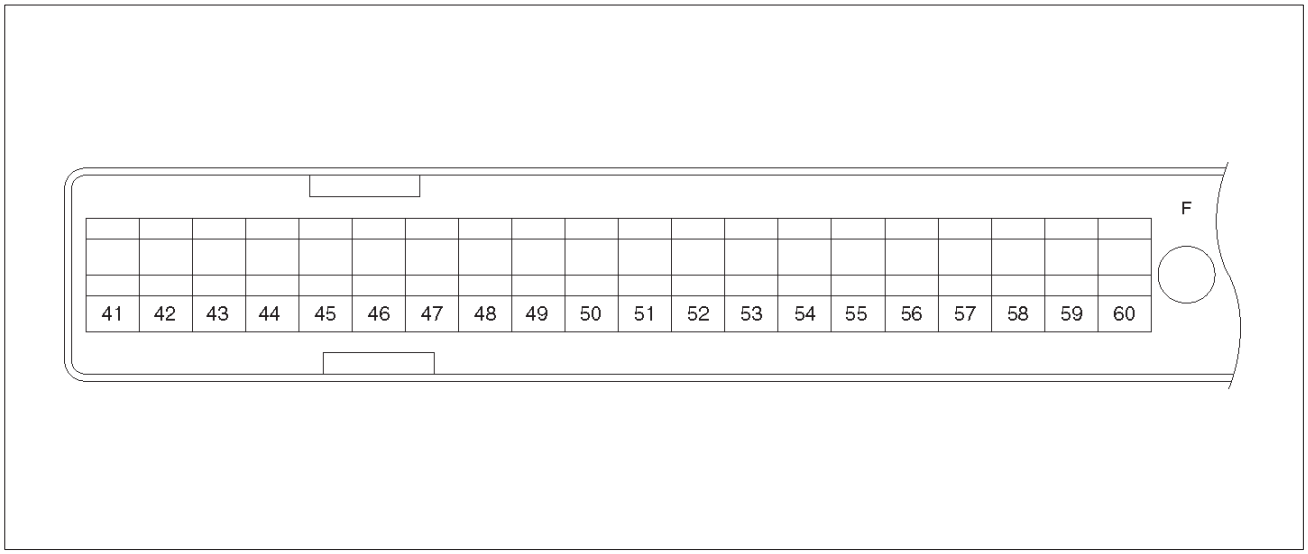

060RY00046

PIN	PIN Function	Wire Color	IGN ON	ENG RUN	Refer To
F41	Throttle Position(TP) 1 Sensor Ground	GRN	0.0V	0.0V	General Description and Operation,TPS
F42	Fuel Pump Relay	SIL/BLK	0.0V	B+	On Vehicle Service, Fuel Pump Relay
F43	Adaptor Case	RED/WHT	0.0V	0.0V	4L30E T/Mission
F44	Bank 1 HO2S 2 Heater Ground	BLK/PNK	0.0V	0.0V	General Description and Operation, Catalyst Monitor HO2S 2
F45	A/C Request	GRN/ORN	0.0V	0.0V	Chassis Electrical
F46	Auto Cruise Brake Switch	ORN	0.0V	0.0V	Chassis Electrical
F47	Adaptor Case	VIO/RED	B+	B+	4L30E T/Mission
F48	Throttle Valve DC Motor(–)	BLK	Duty Cycle	Duty Cycle	General Description and Operation, ETC
F49	Shielded Wire (ION Sensing Module)	SIL	0.0V	0.0V	Chassis Electrical
F50	Bank 2 HO2S 2 Ground	ORN	0.0V	0.0V	General Description and Operation, Catalyst Monitor HO2S 2
F51	DLC Serial Data	ORN	5.0V	5.0V	Chassis Electrical
F52	Bank 1 HO2S 2 Ground	RED	0.0V	0.0V	General Description and Operation, Catalyst Monitor HO2S 2
F53	ECT Ground	GRN	0.0V	0.0V	General Description and Operation,ECT Sensor
F54	Vapor Pressure Sensor Ground	GRY/RED	0.0V	0.0V	General Description and Operation,VP Sensor
F55	Not Used	—	—	—	—
F56	Injector Cylinder #5	GRN/BLK	B+	B+	General Description and Operation,Fuel Injector
F57	Ignition Feed	WHT	B+	B+	Chassis Electrical
F58	Class 2 Data	ORN/GRN	0.0V	0.0V	General Description

Downloaded from www.Manualslib.com manuals search engine

PIN	PIN Function	Wire Color	IGN ON	ENG RUN	Refer To
F59	Not Used	—	—	—	—
F60	Shielded Wire	SIL	0.0V	0.0V	Chassis Electrical

Downloaded from www.Manualslib.com manuals search engine

PCM Pinout Table, 80-Way Blue Connector – Row “F61 ~ 80”

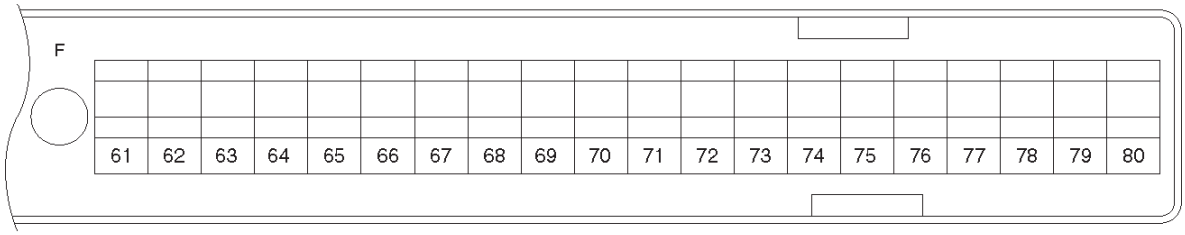

060RY00047

PIN	PIN Function	Wire Color	IGN ON	ENG RUN	Refer To
F61	Throttle Position(TP) 2 Sensor Ground	GRN/WHT	0.0V	0.0V	General Description and Operation,TPS
F62	Injector Cylinder #2	GRN/ORN	B+	B+	General Description and Operation,Fuel Injector
F63	AP Sensor 1 Sensor Ground	RED	0.0V	0.0V	General Description and Operation,APS
F64	Injector Cylinder #4	GRN/RED	B+	B+	General Description and Operation,Fuel Injector
F65	Throttle Psition(TP) 2 Sensor Signal	BLU/WHT	0.5–0.8V	0.8–0.8V (at idle)	General Description and Operation,TPS
F66	Injector Cylinder #3	GRN	B+	B+	General Description and Operation,Fuel Injector
F67	ION Sensing Module	YEL	1.555V	1.555V	General Description and Operation, ION Sensing Module
F68	ION Sensing Module	RED	1.555V	1.555V	General Description and Operation, ION Sensing Module
F69	Injector Cylinder #1	GRN/WHT	B+	B+	General Description and Operation,Fuel Injector
F70	Not Used	—	—	—	—
F71	Bank 2 HO2S 2 Heater Ground	BLK	0.0V	0.0V	General Description and Operation, Catalyst Monitor HO2S 2
F72	Auto Cruise Switch Resume	BRN/YEL	0.0V	0.0V	Chassis Electrical
F73	Cranshaft Position Sensor	YEL	0.3V	2.2V	General Description and Operation, CKP sensor
F74	ECT Sensor	BLU/RED	0.5–4.9V	0.5–4.9V	General Description and Operation, ECT Sensor
F75	Ignition Feed	RED/BLU	B+	B+	Chassis Electrical
F76	Clutch Switch(M/T only)	YEL/GRN	B+	B+	Manual T/Mission
	Mode Switch(A/T only)	YEL/GRN	B+	B+	4L30E T/Mission

Downloaded from www.Manualslib.com manuals search engine

PIN	PIN Function	Wire Color	IGN ON	ENG RUN	Refer To
F77	Mode Switch	BLU/WHT	B+	B+	4L30E T/Mission
F78	Mode Switch	BLU/BLK	B+	B+	4L30E T/Mission
F79	Mode Switch	BLU/YEL	B+	B+	4L30E T/Mission
F80	AP Sensor 2 Sensor Ground	BLU	0.0V	0.0V	General Description and Operation, APS

Downloaded from www.Manualslib.com manuals search engine

PCM Pinout Table, 80-Way Red Connector – Row “S1 ~ 20”

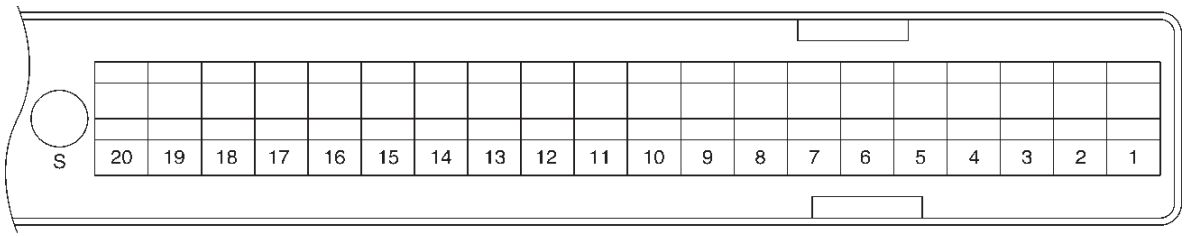

060RY00069

PIN	PIN Function	Wire Color	IGN ON	ENG RUN	Refer To
S1	PCM Ground	BLK/WHT	0.0V	0.0V	Chassis Electrical
S2	Bank 1 HO2S 1 Heater Ground	BLK	0.0V	0.0V	General Description and Operation, Catalyst Monitor HO2S
S3	Not Used	—	—	—	—
S4	ATF Warning Lamp	ORN/BLU	B+	B+	4L30E T/Mission
S5	5Volt Referrence“2” (CKP Sensor/CMP Sensor)	YEL/RED	5.0V	5.0V	Appropriate Sensor (CKP Sensor, CMP Sensor ,AP2 Sensor)
S6	Auto Cruise Switch Cancel	GRY/GRN	0.0V	0.0V	Chassis Electrical
S7	Fuel Gauge	YEL/RED	B+	B+	Chassis Electrical
S8	Not Used	—	—	—	—
S9	Not Used	—	—	—	—
S10	Shift High(Band Apply)	BRN/YEL	B+	B+	4L30E T/Mission
S11	Malfunction Indicator (Check Engine) Lamp	VIO	0.0V	B+	Chassis Electrical
S12	Not Used	—	—	—	—
S13	ION Sensing Module	RED/WHT	1.555V	1.555V	General Description and Operation, ION Sensing Module
S14	Bank 2 HO2S 1 Ground Jump	BLU	0.0V	0.0V	General Description and Operation, Catalyst Monitor HO2S 1
S15	Bank 2 HO2S 2 Ground Jump	ORN	0.0V	0.0V	General Description and Operation, Catalyst Monitor HO2S 2
S16	Bank 2 HO2S 2 Low	BLU	0.0V	0.1V	General Description and Operation, Catalyst Monitor HO2S
S17	Bank 1 HO2S 1 Ground Jump	WHT	0.0V	0.0V	General Description and Operation, Catalyst Monitor HO2S 1

Downloaded from www.Manualslib.com manuals search engine

PIN	PIN Function	Wire Color	IGN ON	ENG RUN	Refer To
S18	Bank 1 HO2S 1 Low	GRN	0.0V	0.1V	General Description and Operation, Catalyst Monitor HO2S
S19	ION Sensing Module	RED/YEL	1.555V	1.555V	General Description and Operation, ION Sensing Module
S20	Transmission Fluid Temperature Sensor Ground		0.0V	0.0V	4L30E T/Mission

Downloaded from www.Manualslib.com manuals search engine

PCM Pinout Table, 80-Way Red Connector – Row “S21 ~ 40”

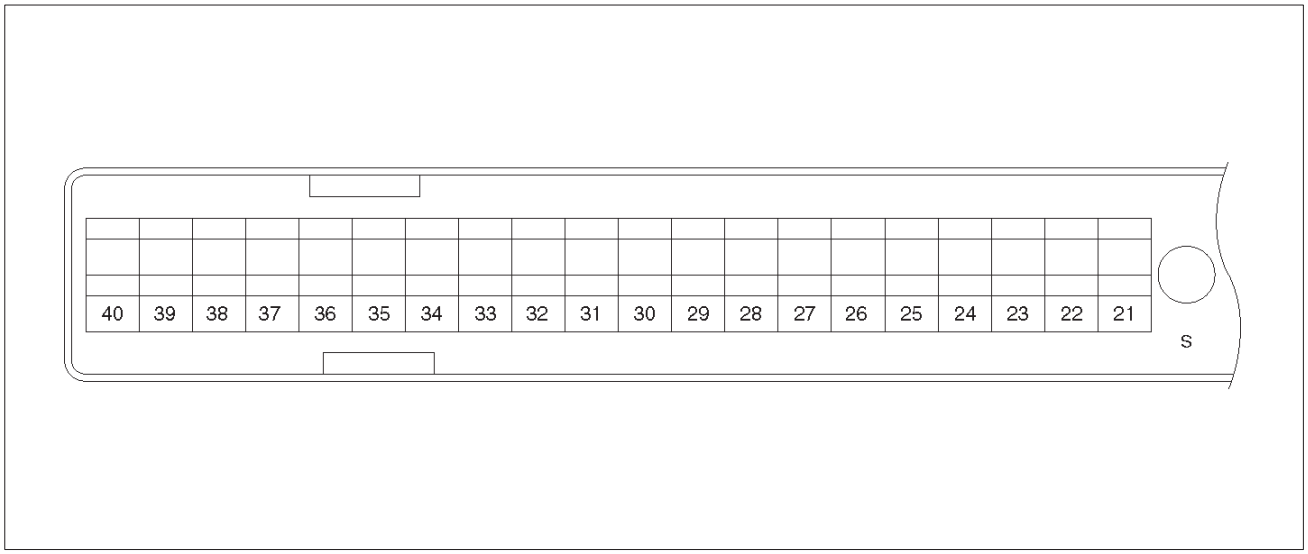

060RY00049

PIN	PIN Function	Wire Color	IGN ON	ENG RUN	Refer To
S21	Not Used	—	—	—	—
S22	Transmissin Output Speed Sensor	RED	0.0V	0.0V	4L30E T/Mission
S23	PCM Ground	BLK/RED	0.0V	0.0V	Chassis Electrical
S24	Bank 1 HO2S 2 Ground Jump	RED	0.0V	0.0V	General Description and Operation, Catalyst Monitor HO2S 2
S25	Not Used	—	—	—	—
S26	EGR Control Low	BLK/YEL	B+	B+	General Description and Operation, EGR Control
S27	VSS Input	Light GRN/WHT	0.0V	0.1V (at rest)	Chassis Electrical
S28	Injector Cylinder #6	GRN/YEL	B+	B+	General Description and Operation, Fuel Injector
S29	Winter Switch	VIO/GRN	B+	B+	4L30E T/Mission
S30	Auto Cruise Main Switch	PNK/BLK	0.0V	0.0V	Chassis Electrical
S31	Transmissin Range Signal“2–3”	GRN	0.0V	0.0V	4L30E T/Mission
S32	Ignition Feed	RED/BLU	B+	B+	Chassis Electrical
S33	TCC Solenoid	RED/BRN	0.0V	0.0V	T/Mission
S34	Not Used	—	—	—	—
S35	ION Sensing Module	RED/GRN	1.555V	1.555V	General Description and Operation, ION Sensing Module
S36	5Volt Referrence (AP Sensor 1)	BLK	5.0V	5.0V	AP Sensor
S37	5Volt Referrence (Fuel Tank Pressure Sensor/MAP Sensor/EGR Posistion Sensor)	RED/YEL	5.0V	5.0V	(Fuel Tank Pressure Sensor/MAP Sensor/EGR Posistion Sensor) Sensor
S38	5Volt Referrence (TP Sensor 1)	RED/YEL	5.0V	5.0V	TP Sensor

Downloaded from www.Manualslib.com manuals search engine

PIN	PIN Function	Wire Color	IGN ON	ENG RUN	Refer To
S39	Auto Cruise Lamp	BLK/ORN	0.0V	0.0V	Chassis Electrical
S40	PCM Ground	BLK	0.0V	0.0V	Chassis Electrical

Downloaded from www.Manualslib.com manuals search engine

PCM Pinout Table, 80-Way Red Connector – Row “S41 ~ 60”

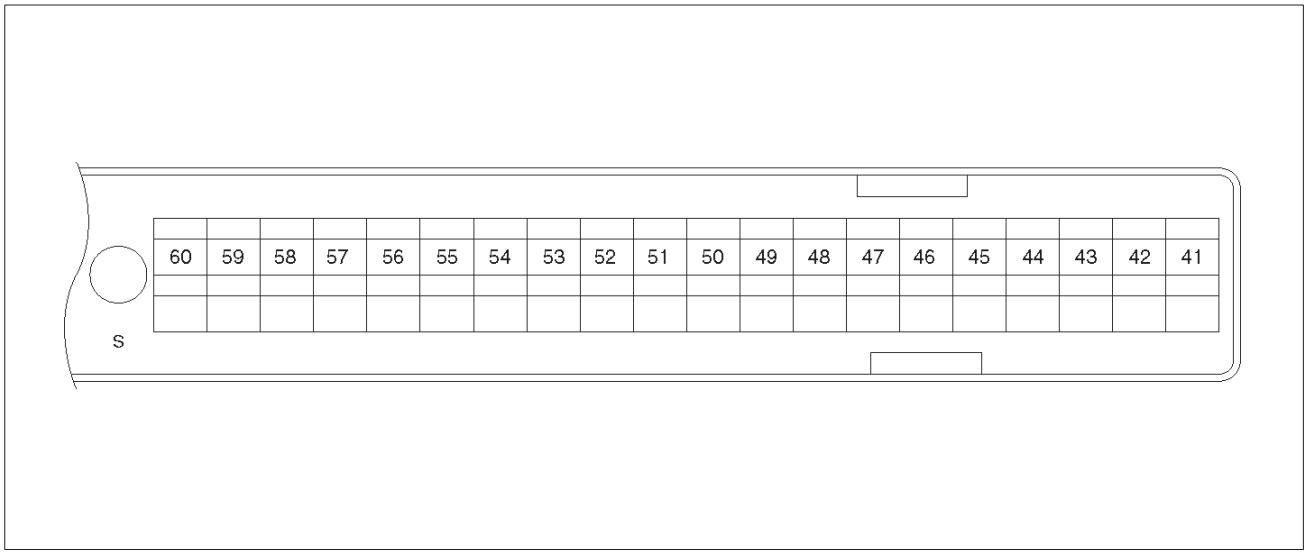

060RY00050

PIN	PIN Function	Wire Color	IGN ON	ENG RUN	Refer To
S41	AP Sensor 3 Sensor Ground	BLU/ORN	0.0V	0.0V	General Description and Operation, APS
S42	Bank 2 HO2S 1 Heater Ground	BLK	0.0V	0.0V	General Description and Operation, Catalyst Monitor HO2S
S43	Transmissin Range Signal“1–2” “3–4”	GRY/WHT	0.0V	0.0V	4L30E T/Mission
S44	Not Used	—	—	—	—
S45	Antilock Brake System (ABS) Off Switch	VIO/WHT	B+	B+	Antilock Brake System
S46	A/T Check Transmission Lamp	ORN/BLK	B+	B+	Chassis Electrical
	M/T Up Shift Lamp	ORN/BLK	B+	B+	Chassis Electrical
S47	Winter Lamp	PNK/GRN	B+	B+	4L30E T/Mission
S48	EVAP Duty Solenoid Valve	RED/BLU	B+	5.7V	General Description and Operation, EVAP Emission Control System
S49	DLC	ORN/BLU	B+	B+	General Description
S50	Fuel Sender Unit	YEL/VIO	0.0V	0.0V	—
S51	TCC Solenoid	BRN/BLU	B+	B+	T/Mission
S52	Vapor Pressure Sensor Signal	GRY	0.2–4.8V	0.2–4.8V	General Description and Operation,VP Sensor
S53	Power Switch	VIO/RED	B+	B+	4L30E T/Mission
S54	Bank 2 HO2S 1 Low	BLU	0.0V	0.1V	General Description and Operation, Catalyst Monitor HO2S
S55	Transmissin Output Speed Sensor	WHT	0.0V	0.0V	4L30E T/Mission
S56	Not Used	—	—	—	—
S57	Not Used	—	—	—	—

Downloaded from www.Manualslib.com manuals search engine

PIN	PIN Function	Wire Color	IGN ON	ENG RUN	Refer To
S58	Bank 2 HO2S 1 High	RED	0.3V	0.1–0.9V	General Description and Operation, Catalyst Monitor HO2S
S59	Auto Cruise Steering Set Switch	Light GRN	0.0V	0.0V	Chassis Electrical
S60	Fuel Sender Unit	GRY	0.5–4.9V	0.5–4.9V	ON-Vehicle Service PCM and Sensors

Downloaded from www.Manualslib.com manuals search engine

PCM Pinout Table, 80-Way Red Connector – Row “S61 ~ 80”

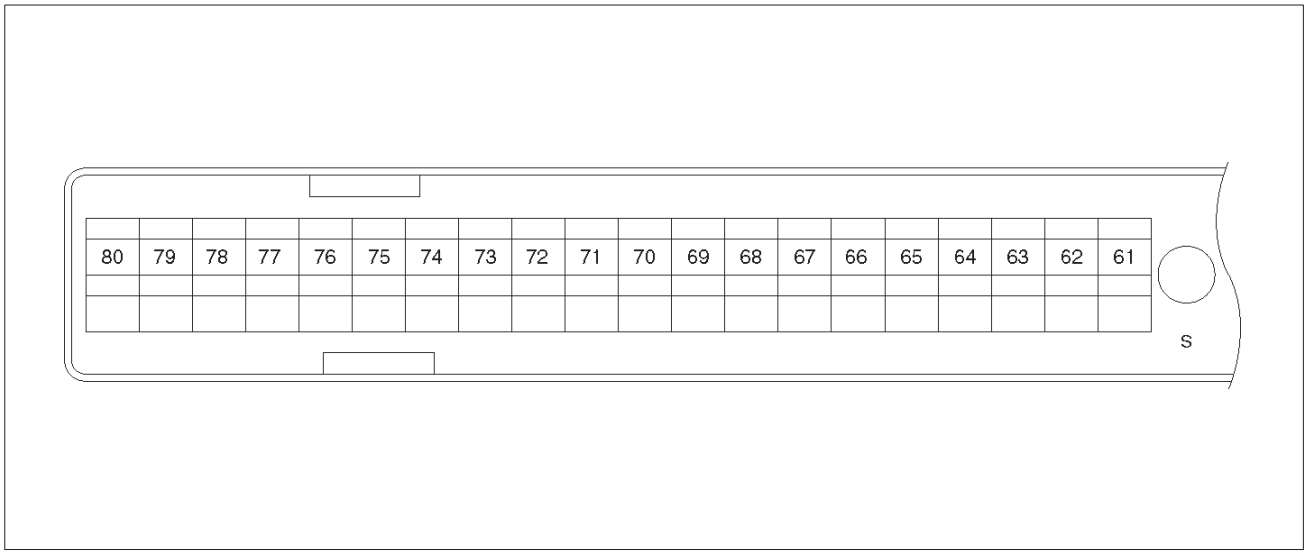

060RY00051

PIN	PIN Function	Wire Color	IGN ON	ENG RUN	Refer To
S61	Intake Air Temperature (IAT)Sensor Ground	GRN	0.0V	0.0V	General Description and Operation, IAT
S62	ION Sensing Module	RED	1.555V	1.555V	General Description and Operation, ION Sensing Module
S63	Bank 1 HO2S 2 High	WHT	0.3V	0.1–0.9V	General Description and Operation, Catalyst Monitor HO2S
S64	Bank 2 HO2S 1 High	PNK	0.3V	0.1–0.9V	General Description and Operation, Catalyst Monitor HO2S
S65	Bank 2 HO2S 2 High	GRN	0.3V	0.1–0.9V	General Description and Operation, Catalyst Monitor HO2S
S66	Transmission Fluid Temperature Sensor	RED/WHT	0.5–4.9V (depends on temperature)	0.5–4.9V (depends on temperature)	4L30E T/Mission
S67	Exhaust Gas Recirculation (EGR)	YEL/RED	0.6V	0.6V	General Description and Operation,EGR Control
S68	Accelerator Position(AP) Sensor 1	WHT	0.41–0.45V	0.41–0.45V	General Description and Operation,AP Sensor
S69	Throttle Valve DC Motor(+)	BLK	Duty Cycle	Duty Cycle	General Description and Operation,ETC
S70	Not Used	—	—	—	—
S71	Not Used	—	—	—	—
S72	Ignition Feed for ETC	RED/BLU	B+	B+	Chassis Electrical
S73	Auto Cruise Main Lamp	GRY/BLU	B+	B+	Chassis Electrical
S74	Variable Intake Manifold	WHT/BLU	0.0V	B+(rpm 3600 over)	General Description
S75	Canister Vent Valve	BLU/PNK	6.0V Tank empty	5.7V Tank empty	General Description and Operation, EVAP
S76	Throttle Position(TP) 1 Sensor Signal	BLU/PNK	0.5–0.8V	0.5–0.8V (at idle)	General Description and Operation,TPS

Downloaded from www.Manualslib.com manuals search engine

PIN	PIN Function	Wire Color	IGN ON	ENG RUN	Refer To
S77	5Volt Referrence (AP Sensor 3)	ORN	5.0V	5.0V	Appropriate Sensor
S78	Accelerate Position(AP) Sensor 2	YEL	0.41–0.45V	0.41–0.45V	General Description and Operation,AP Sensor
S79	Accelerate Position(AP) Sensor 3	BLU/GRN	4.55–4.99V	0.41–0.45V	General Description and Operation,AP Sensor
S80	Manifold Absolute Pressure(MAP)	BLU	0V	0V	General Description and Operation, Manifold Absolute Pressure

Downloaded from www.Manualslib.com manuals search engine

Component Locators

Engine Component Locator

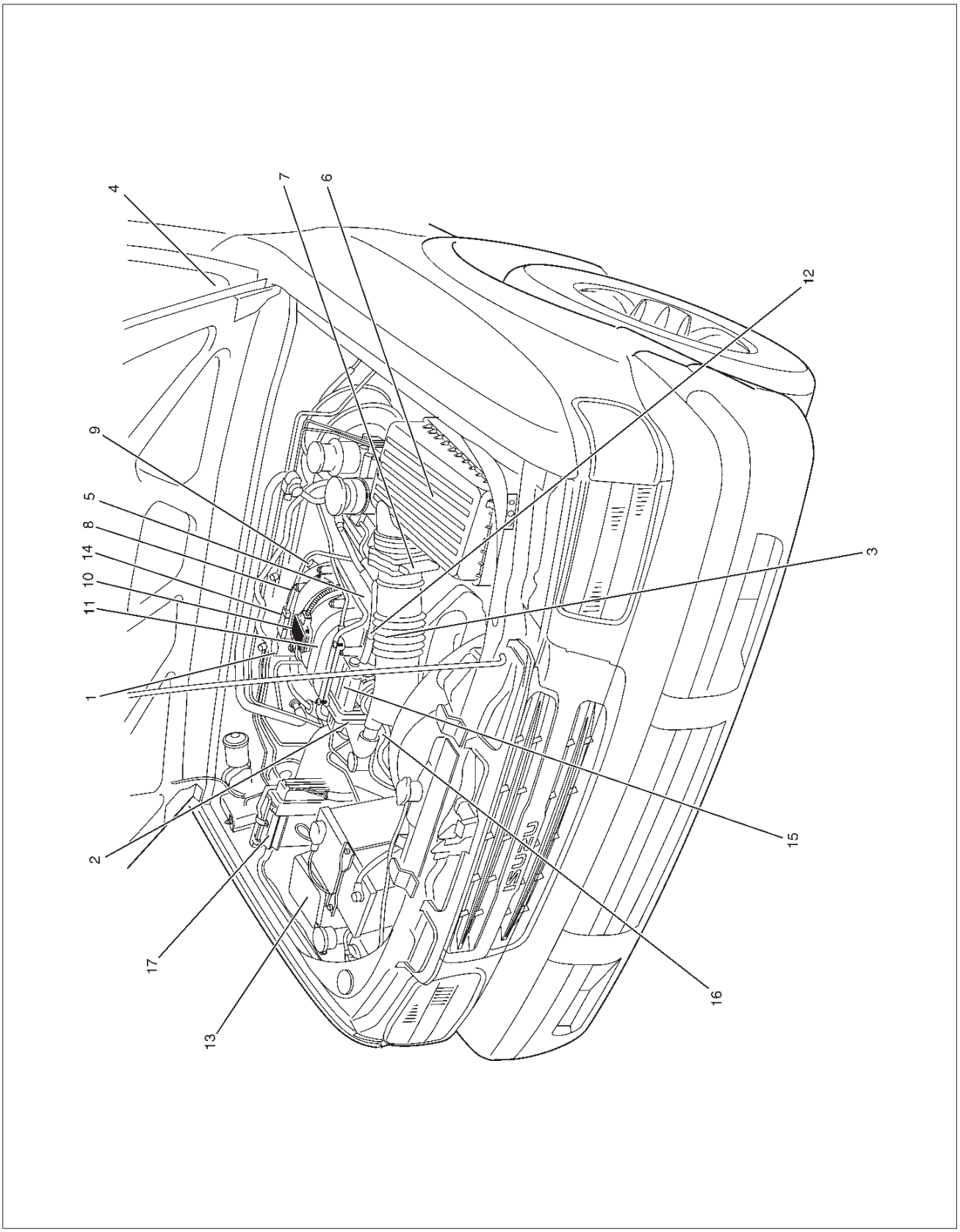

060RY00070

Downloaded from www.Manualslib.com manuals search engine

Engine Component Locator Table

Number	Name	Location
1	Linear Exhaust Gas Recirculation (EGR) Valve	Rear right side of the engine
2	Throttle Position (TP) Sensor	On the throttle body
3	Intake Air Temperature (IAT) Sensor	On the intake air duct near the throttle body
4	Check Engine (MIL) Light	On the instrument panel beneath the tachometer
5	Positive Crankcase Ventilation (PCV) Valve	On the left of the cylinder head cover
6	Air Cleaner	Left front of the engine bay
7	Mass Air Flow (MAF) Sensor	Attached to the air filter box
8	Camshaft Position (CMP) Sensor	On the rear right side of the left cylinder head
9	Fuel Pressure Regulator	Rear side of the engine
10	ION Sensing module	Bolted to the top of the Common Chamber
11	Common Chamber	Top of the engine
12	EVAP Canister Purge Valve	Bolted to the front of the coolant pipe
13	Fuse/Relay Box	Along the inside of the right fender
14	Manifold Absolute Pressure (MAP) Sensor	Bolted to the top of the Common Chamber
15	Throttle Body	Between the intake air duct and the Common Chamber
16	Engine Coolant Temperature Sensor	On the coolant crossover pipe at the front of the engine, near the throttle body
17	Power Train Control Module (PCM)	Along the inside of the right fender

Downloaded from www.Manualslib.com manuals search engine

Undercarriage Component Locator

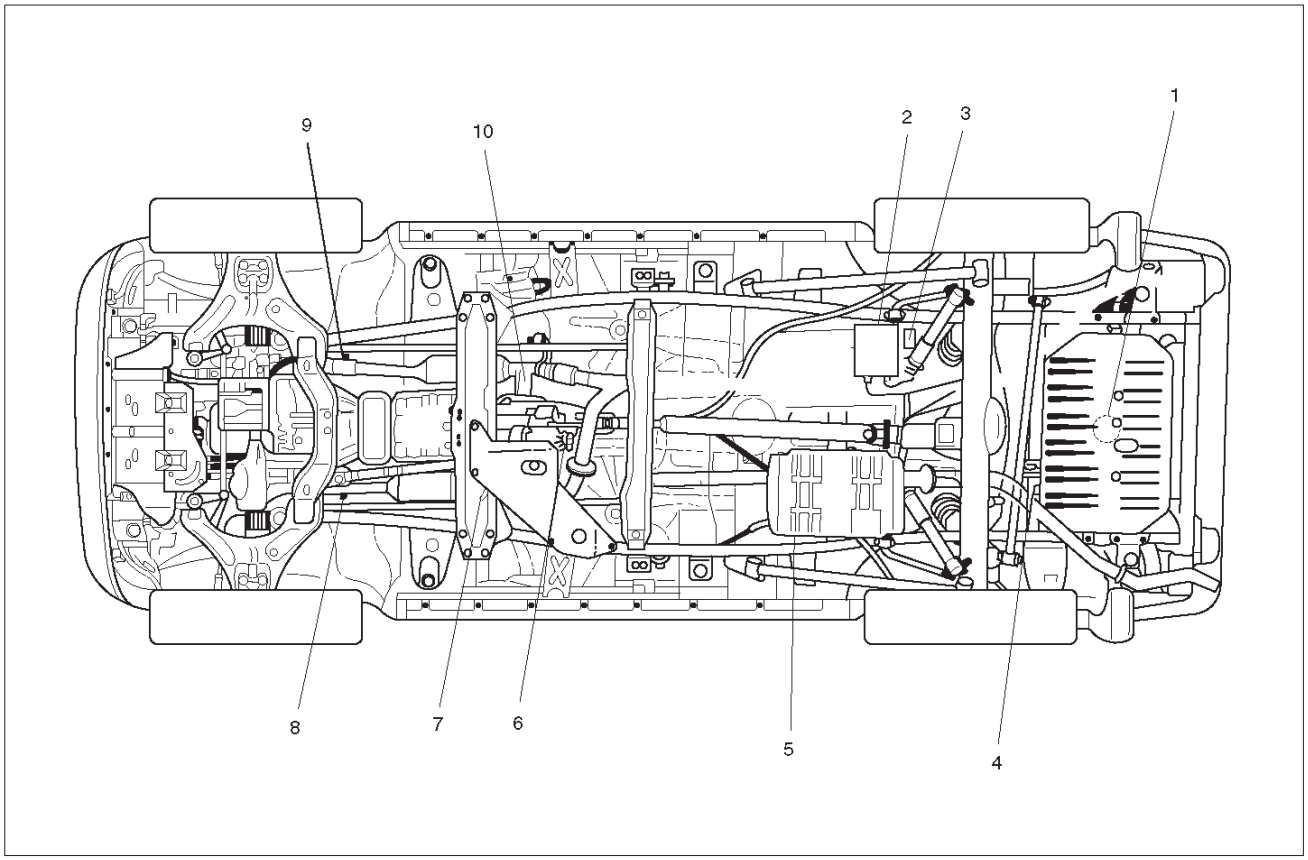

F00RW032

Undercarriage Component Locator Table

Number	Name	Location
1	Fuel Pump Assembly	Installed in the top of the fuel tank
2	EVAP Canister	On the top of the bracket that is located behind of the cross member
3	EVAP Canister Cut Valve	On the top of the bracket that is located behind of the cross member
4	Fuel Gauge Unit	Installed in the front edge of the fuel tank, on the right side
5	Fuel Filter	Located along the inside of the right frame rail, ahead of the rear axle
6	Vehicle Speed Sensor (VSS)	2WD: Protrudes from the transmission housing, just ahead of the propeller shaft. 4WD: Protrudes from the rear output shaft housing of the transfer case.
7	Heated Oxygen Sensor (Bank 1, HO2S 1)	Threaded into the exhaust pipe behind the right-hand catalytic converter
8	Heated Oxygen Sensor (Bank 1, HO2S 2)	Threaded into the exhaust pipe ahead of the right-hand catalytic converter
9	Heated Oxygen Sensor (Bank 2, HO2S 1)	Threaded into the exhaust pipe ahead the left-hand catalytic converter
10	Heated Oxygen Sensor (Bank 2, HO2S 2)	Threaded into the exhaust pipe behind the left-hand catalytic converter

Downloaded from www.Manualslib.com manuals search engine

Fuse and Relay Panel (Underhood Electrical Center)

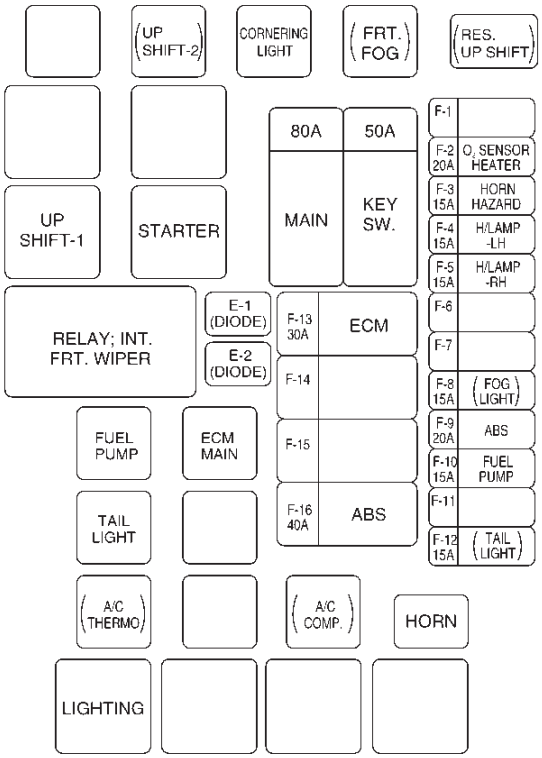

065RY00003

Downloaded from www.Manualslib.com manuals search engine

Sensors and Miscellaneous Component Locators

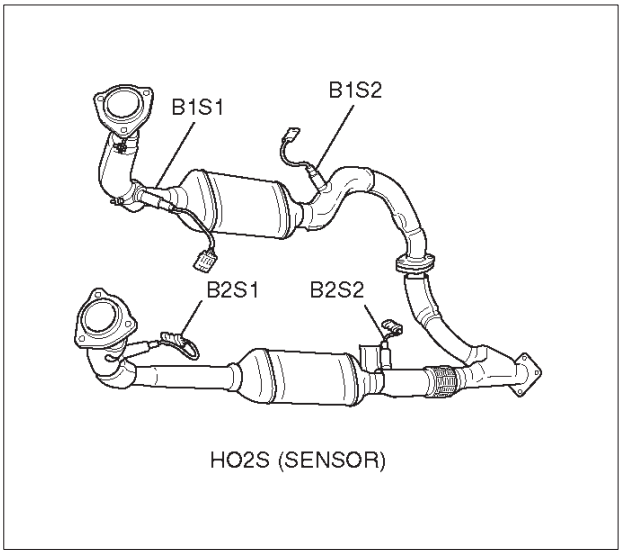

060RY00013

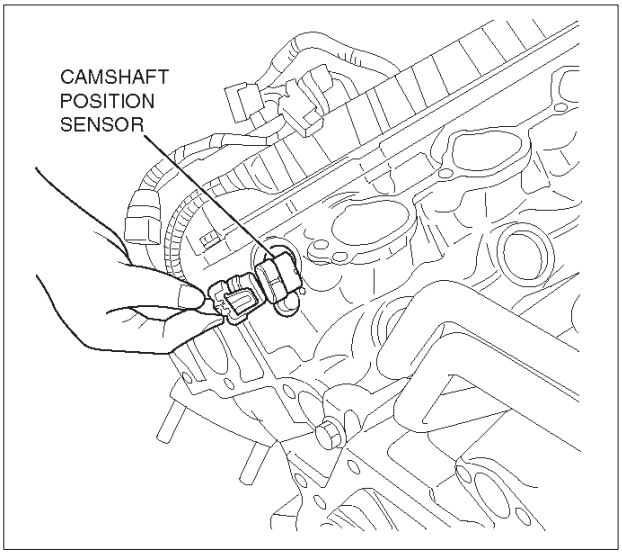

060RX00005

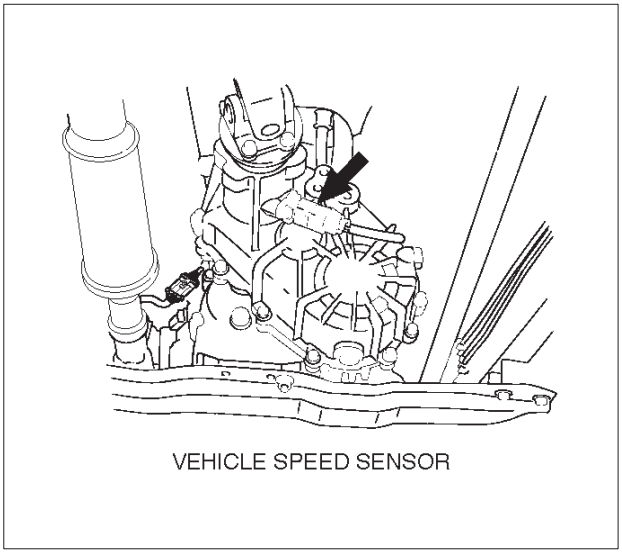

T321067

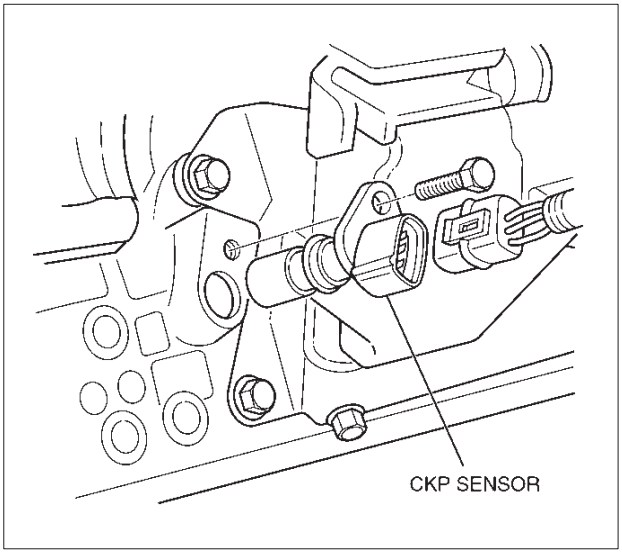

060RW111

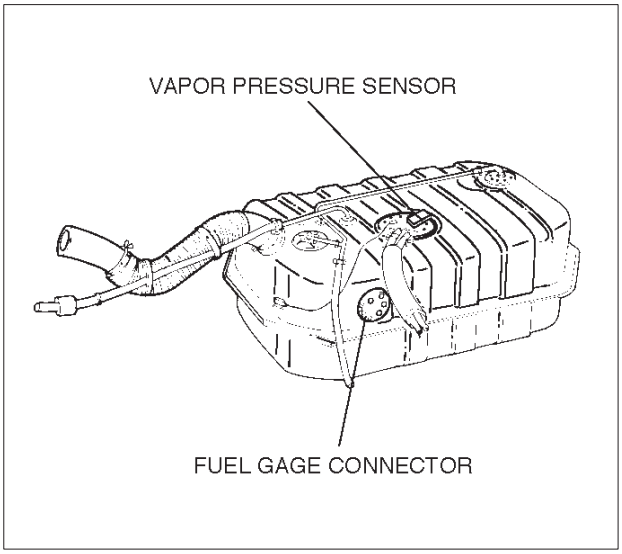

T321068

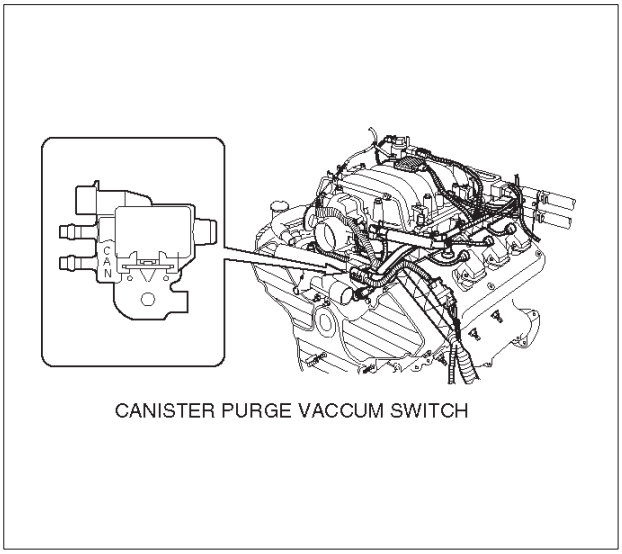

141RY00001

Downloaded from www.Manualslib.com manuals search engine

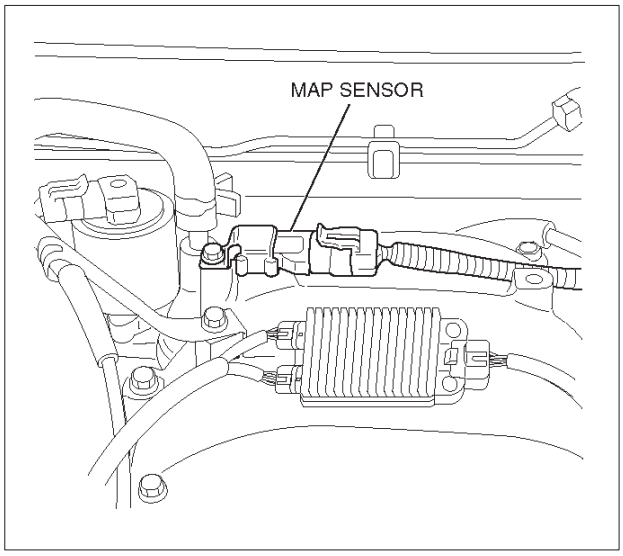

055RY00002

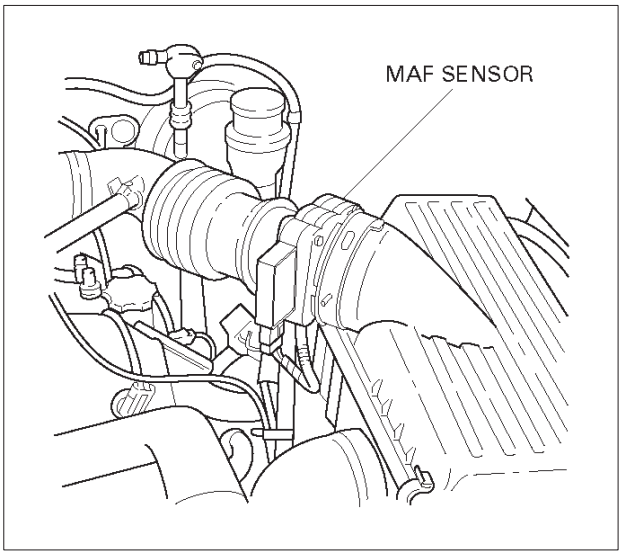

T321078

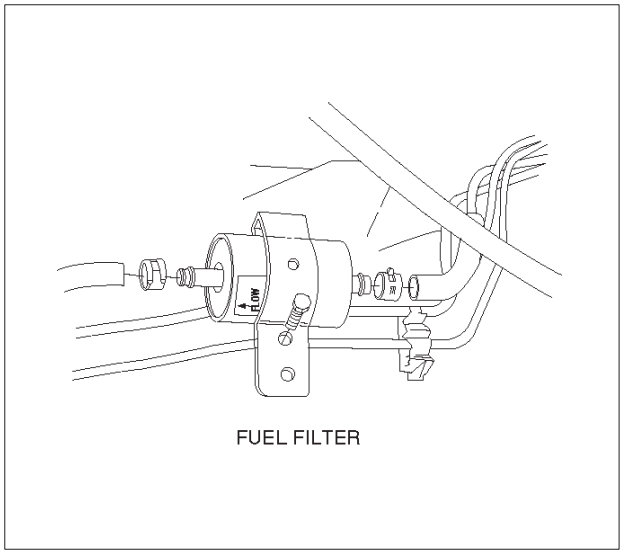

041RW004

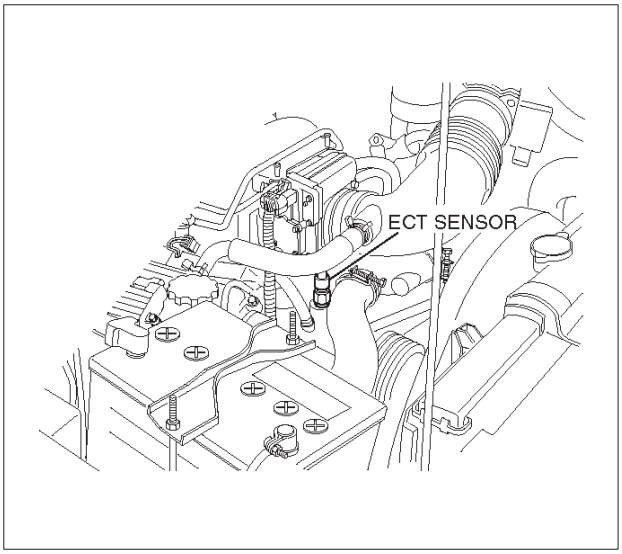

060RY00014

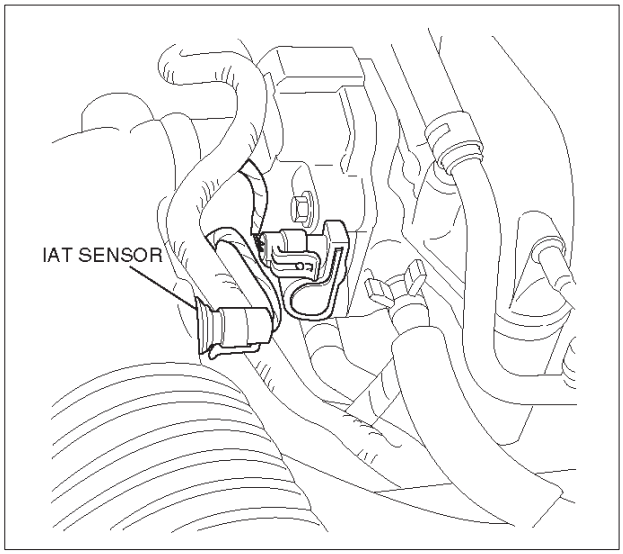

025RW005

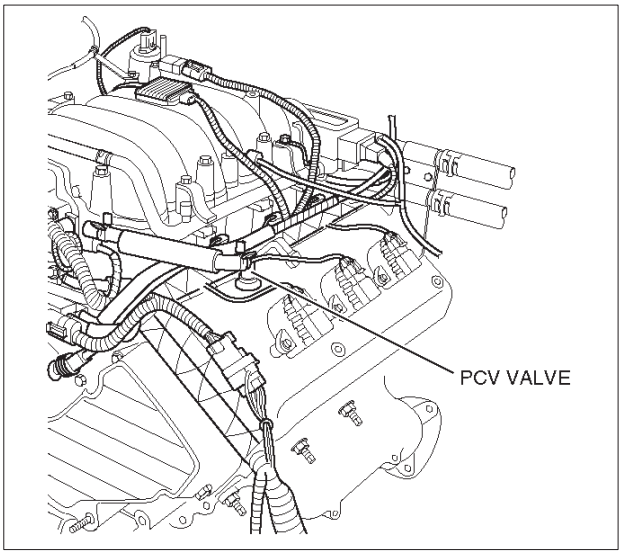

060RY00016

Downloaded from www.Manualslib.com manuals search engine

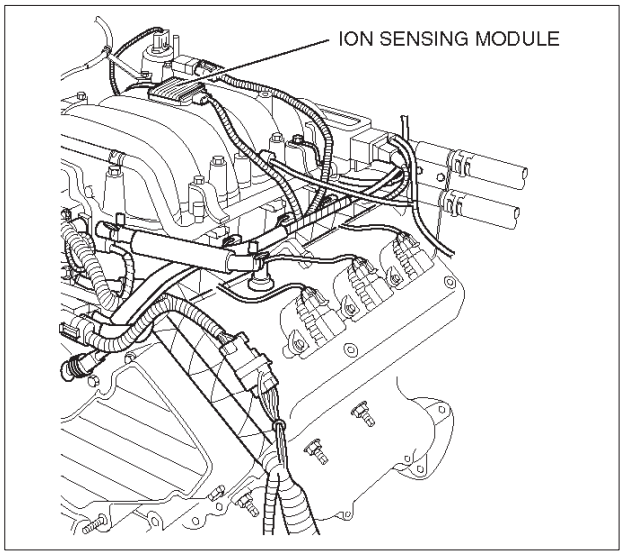

060RY00023

Downloaded from www.Manualslib.com manuals search engine

Diagnosis

Strategy-Based Diagnostics

Strategy-Based Diagnostics

The strategy-based diagnostic is a uniform approach to repair all Electrical/Electronic (E/E) systems. The diagnostic flow can always be used to resolve an E/E system problem and is a starting point when repairs are necessary. The following steps will instruct the technician how to proceed with a diagnosis:

1. Verify the customer complaint.
   - To verify the customer complaint, the technician should know the normal operation of the system.
2. Perform preliminary checks.
   - Conduct a thorough visual inspection.
   - Review the service history.
   - Detect unusual sounds or odors.
   - Gather diagnostic trouble code information to achieve an effective repair.
3. Check bulletins and other service information.
   - This includes videos, newsletters, etc.
4. Refer to service information (manual) system check(s).
   - "System checks" contain information on a system that may not be supported by one or more DTCs. System checks verify proper operation of the system. This will lead the technician in an organized approach to diagnostics.
5. Refer to service diagnostics.

DTC Stored

Follow the designated DTC chart exactly to make an effective repair.

No DTC

Select the symptom from the symptom tables. Follow the diagnostic paths or suggestions to complete the repair. You may refer to the applicable component/system check in the system checks.

No Matching Symptom

1. Analyze the complaint.
2. Develop a plan for diagnostics.
3. Utilize the wiring diagrams and the theory of operation.

Combine technician knowledge with efficient use of the available service information.

Intermittents

Conditions that are not always present are called intermittents. To resolve intermittents, perform the following steps:

1. Observe history DTCs, DTC modes, and freeze frame data.
2. Evaluate the symptoms and the conditions described by the customer.
3. Use a check sheet or other method to identify the circuit or electrical system component.
4. Follow the suggestions for intermittent diagnosis found in the service documentation.

Most Scan Tools, such as the Tech 2, have data-capturing capabilities that can assist in detecting intermittents.

No Trouble Found

This condition exists when the vehicle is found to operate normally. The condition described by the customer may be normal. Verify the customer complaint against another vehicle that is operating normally. The condition may be intermittent. Verify the complaint under the conditions described by the customer before releasing the vehicle.

1. Re-examine the complaint.
   When the Complaint cannot be successfully found or isolated, a re-evaluation is necessary. The complaint should be re-verified and could be intermittent as defined in *Intermittents* section, or could be normal.
2. Repair and verify.
   After isolating the cause, the repairs should be made. Validate for proper operation and verify that the symptom has been corrected. This may involve road testing or other methods to verify that the complaint has been resolved under the following conditions:
   - Conditions noted by the customer.
   - If a DTC was diagnosed, verify a repair by duplicating conditions present when the DTC was set as noted in the Failure Records or Freeze Frame data.

Verifying Vehicle Repair

Verification of the vehicle repair will be more comprehensive for vehicles with OBD II system diagnostics. Following a repair, the technician should perform the following steps:

IMPORTANT: Follow the steps below when you verify repairs on OBD II systems. Failure to follow these steps could result in unnecessary repairs.

1. Review and record the Failure Records and the Freeze Frame data for the DTC which has been diagnosed (Freeze Frame data will only be stored for an A or B type diagnostic and only if the MIL("Check Engine" lamp) has been requested).
2. Clear the DTC(S).
3. Operate the vehicle within conditions noted in the Failure Records and Freeze Frame data.
4. Monitor the DTC status information for the DTC which has been diagnosed until the diagnostic test associated with that DTC runs.

Downloaded from www.Manualslib.com manuals search engine

General Service Information

OBD II Serviceablity Issues

With the introduction of OBD II diagnostics across the entire passenger car and light-duty truck market in 1996, illumination of the MIL ("Check Engine" lamp) due to a non-vehicle fault could lead to misdiagnosis of the vehicle, increased warranty expense and customer dissatisfaction. The following list of non-vehicle faults does not include every possible fault and may not apply equally to all product lines.

Fuel Quality

Fuel quality is not a new issue for the automotive industry, but its potential for turning on the MIL ("Check Engine" lamp) with OBD II systems is new.

Fuel additives such as "dry gas" and "octane enhancers" may affect the performance of the fuel. If this results in an incomplete combustion or a partial burn, it will show up as a Misfire DTC P0300. The Reid Vapor Pressure of the fuel can also create problems in the fuel system, especially during the spring and fall months when severe ambient temperature swings occur. A high Reid Vapor Pressure could show up as a Fuel Trim DTC due to excessive canister loading. High vapor pressures generated in the fuel tank can also affect the Evaporative Emission diagnostic as well.

Using fuel with the wrong octane rating for the vehicle may cause driveability problems. Many of the major fuel companies advertise that using "premium" gasoline will improve the performance of the vehicle. Most premium fuels use alcohol to increase the octane rating of the fuel. Although alcohol-enhanced fuels may raise the octane rating, the fuel's ability to turn into vapor in cold temperatures deteriorates. This may affect the starting ability and cold driveability of the engine.

Low fuel levels can lead to fuel starvation, lean engine operation, and eventually engine misfire.

Non-OEM Parts

All of the OBD II diagnostics have been calibrated to run with OEM parts. Something as simple as a high-performance exhaust system that affects exhaust system back pressure could potentially interfere with the operation of the EGR valve and thereby turn on the MIL ("Check Engine" lamp). Small leaks in the exhaust system near the post catalyst oxygen sensor can also cause the MIL ("Check Engine" lamp) to turn on.

Aftermarket electronics, such as transceivers, stereos, and anti-theft devices, may radiate EMI into the control system if they are improperly installed. This may cause a false sensor reading and turn on the MIL ("Check Engine" lamp).

Environment

Temporary environmental conditions, such as localized flooding, will have an effect on the vehicle ignition system. If the ignition system is rain-soaked, it can temporarily cause engine misfire and turn on the MIL ("Check Engine" lamp).

Refueling

A new OBD II diagnostic was introduced in 1996 on some vehicles. This diagnostic checks the integrity of the entire evaporative emission system. If the vehicle is restarted after refueling and the fuel cap is not secured correctly, the on-board diagnostic system will sense this as a system fault and turn on the MIL ("Check Engine" lamp) with a DTC P0440.

Vehicle Marshaling

The transportation of new vehicles from the assembly plant to the dealership can involve as many as 60 key cycles within 2 to 3 miles of driving. This type of operation contributes to the fuel fouling of the spark plugs and will turn on the MIL ("Check Engine" lamp) with a P0300 Misfire DTC.

Poor Vehicle Maintenance

The sensitivity of OBD II diagnostics will cause the MIL ("Check Engine" lamp) to turn on if the vehicle is not maintained properly. Restricted air filters, fuel filters, and crankcase deposits due to lack of oil changes or improper oil viscosity can trigger actual vehicle faults that were not previously monitored prior to OBD II. Poor vehicle maintenance can't be classified as a "non-vehicle fault", but with the sensitivity of OBD II diagnostics, vehicle maintenance schedules must be more closely followed.

Related System Faults

Many of the OBD II system diagnostics will not run if the PCM detects a fault on a related system or component. One example would be that if the PCM detected a Misfire fault, the diagnostics on the catalytic converter would be suspended until Misfire fault was repaired. If the Misfire fault was severe enough, the catalytic converter could be damaged due to overheating and would never set a Catalyst DTC until the Misfire fault was repaired and the Catalyst diagnostic was allowed to run to completion. If this happens, the customer may have to make two trips to the dealership in order to repair the vehicle.

Emissions Control Information Label

The engine compartment "Vehicle Emissions Control Information Label" contains important emission specifications and setting procedures. In the upper left corner is exhaust emission information. This identifies the emission standard (Federal, California, or Canada) of the engine, the displacement of the engine in liters, the class of the vehicle, and the type of fuel metering system. There is also an illustrated emission components and vacuum hose schematic.

This label is located in the engine compartment of every vehicle. If the label has been removed it should be replaced. It can be ordered from Isuzu Dealership.

Visual / Physical Engine Compartment Inspection

Perform a careful visual and physical engine compartment inspection when performing any diagnostic procedure or diagnosing the cause of an emission test failure. This can often lead to repairing a problem without further steps. Use the following guidelines when performing a visual/physical inspection:

Downloaded from www.Manualslib.com manuals search engine

- Inspect all vacuum hoses for pinches, cuts, disconnections, and proper routing.
- Inspect hoses that are difficult to see behind other components.
- Inspect all wires in the engine compartment for proper connections, burned or chafed spots, pinched wires, contact with sharp edges or contact with hot exhaust manifolds or pipes.

Basic Knowledge of Tools Required

NOTE: Lack of basic knowledge of this powertrain when performing diagnostic procedures could result in an incorrect diagnosis or damage to powertrain components. Do not attempt to diagnose a powertrain problem without this basic knowledge.

A basic understanding of hand tools is necessary to effectively use this section of the Service Manual.

Serial Data Communications

Class II Serial Data Communications

Government regulations require that all vehicle manufacturers establish a common communication system. This vehicle utilizes the "Class II" communication system. Each bit of information can have one of two lengths: long or short. This allows vehicle wiring to be reduced by transmitting and receiving multiple signals over a single wire. The messages carried on Class II data streams are also prioritized. If two messages attempt to establish communications on the data line at the same time, only the message with higher priority will continue. The device with the lower priority message must wait. The most significant result of this regulation is that it provides Scan tool manufacturers with the capability to access data from any make or model vehicle that is sold.

The data displayed on other Scan tools will appear the same, with some exceptions. Some Scan tools will only be able to display certain vehicle parameters as values that are a coded representation of the true or actual value. On this vehicle the Scan tool displays the actual values for vehicle parameters. It will not be necessary to perform any conversions from coded values to actual values.

On-Board Diagnostic (OBD II)

On-Board Diagnostic Tests

A diagnostic test is a series of steps, the result of which is a pass or fail reported to the diagnostic executive. When a diagnostic test reports a pass result, the diagnostic executive records the following data:

- The diagnostic test has been completed since the last ignition cycle.
- The diagnostic test has passed during the current ignition cycle.
- The fault identified by the diagnostic test is not currently active.

When a diagnostic test reports a fail result, the diagnostic executive records the following data:

- The diagnostic test has been completed since the last ignition cycle.
- The fault identified by the diagnostic test is currently active.
- The fault has been active during this ignition cycle.
- The operating conditions at the time of the failure.

Remember, a fuel trim DTC may be triggered by a list of vehicle faults. Make use of all information available (other DTCs stored, rich or lean condition, etc.) when diagnosing a fuel trim fault.

Comprehensive Component Monitor Diagnostic Operation

Comprehensive component monitoring diagnostics are required to monitor emissions-related input and output powertrain components. The *CARB OBD II Comprehensive Component Monitoring List Of Components Intended To illuminate MIL* is a list of components, features or functions that could fall under this requirement.

Input Components:

Input components are monitored for circuit continuity and out-of-range values. This includes rationality checking. Rationality checking refers to indicating a fault when the signal from a sensor does not seem reasonable, i.e. Throttle Position (TP) sensor that indicates high throttle position at low engine loads or MAP voltage. Input components may include, but are not limited to the following sensors:

- Vehicle Speed Sensor (VSS)
- Crankshaft Position (CKP) sensor
- Throttle Position (TP) sensor
- Engine Coolant Temperature (ECT) sensor
- Camshaft Position (CMP) sensor
- Manifold Absolute Pressure (MAP) sensor
- Mass Air Flow (MAF) sensor

In addition to the circuit continuity and rationality check, the ECT sensor is monitored for its ability to achieve a steady state temperature to enable closed loop fuel control.

Output Components:

Output components are diagnosed for proper response to control module commands. Components where functional monitoring is not feasible will be monitored for circuit continuity and out-of-range values if applicable.

Output components to be monitored include, but are not limited to, the following circuits:

- Control module controlled EVAP Canister Purge Valve
- Electronic Transmission controls
- A/C relays
- Cooling fan relay
- VSS output
- MIL control

Downloaded from www.Manualslib.com manuals search engine

- Cruise control inhibit

Refer to PCM and Sensors in General Descriptions.

Passive and Active Diagnostic Tests

A passive test is a diagnostic test which simply monitors a vehicle system or component. Conversely, an active test, actually takes some sort of action when performing diagnostic functions, often in response to a failed passive test. For example, the EGR diagnostic active test will force the EGR valve open during closed throttle decel and/or force the EGR valve closed during a steady state. Either action should result in a change in manifold pressure.

Intrusive Diagnostic Tests

This is any on-board test run by the Diagnostic Management System which may have an effect on vehicle performance or emission levels.

Warm-Up Cycle

A warm-up cycle means that engine at temperature must reach a minimum of 70˚C (160˚F) *and* rise at least 22˚C (40˚F) over the course of a trip.

Freeze Frame

Freeze Frame is an element of the Diagnostic Management System which stores various vehicle information at the moment an emissions-related fault is stored in memory and when the MIL is commanded on. These data can help to identify the cause of a fault. Refer to *Storing And Erasing Freeze Fame Data* in this section for more detailed information.

Failure Records

Failure Records data is an enhancement of the OBD II Freeze Frame feature. Failure Records store the same vehicle information as does Freeze Frame, but it will store that information for any fault which is stored in on-board memory, while Freeze Frame stores information only for emission-related faults that command the MIL on.

System Status and Drive Cycle for Satisfying Federal Inspection/Maintenance (I/M 240) Regulations

I/M Ready Status means a signal or flag for each emission system test that had been set in the PCM. I/M Ready Status indicates that the vehicle on-board emissions diagnostics have been run. I/M Ready Status is not concerned whether the emission system passed or failed the test, only that on-board diagnosis is complete. Not all vehicles use all possible I/M flags.

Common OBD II Terms

Diagnostic

When used as a noun, the word diagnostic refers to any on-board test run by the vehicle's Diagnostic Management System. A diagnostic is simply a test run on a system or component to determine if the system or component is operating according to specification. There are many diagnostics, shown in the following list:

- Misfire
- Oxygen sensors
- Oxygen sensor heaters
- EGR
- Catalyst monitoring

Enable Criteria

The term "enable criteria" is engineering language for the conditions necessary for a given diagnostic test to run. Each diagnostic has a specific list of conditions which must be met before the diagnostic will run. "Enable criteria" is another way of saying "conditions required".

The enable criteria for each diagnostic is listed on the first page of the DTC description in Section 6E under the heading "Conditions for Setting the DTC". Enable criteria varies with each diagnostic, and typically includes, but is not limited to the following items:

- engine speed
- vehicle speed
- ECT
- MAF/MAP
- barometric pressure
- IAT
- TP
- high canister purge
- fuel trim
- TCC enabled
- A/C on

Trip

Technically, a trip is a key on-run-key off cycle in which all the enable criteria for a given diagnostic are met, allowing the diagnostic to run. Unfortunately, this concept is not quite that simple. A trip is official when all the enable criteria for a given diagnostic are met. But because the enable criteria vary from one diagnostic to another, the definition of trip varies as well. Some diagnostics are run when the vehicle is at operating temperature, some when the vehicle first starts up; some require that the vehicle be cruising at a steady highway speed, some run only when the vehicle is idle; some diagnostics function with the TCC disable. Some run only immediately following a cold engine start-up.

A trip then, is defined as a key on-run-key off cycle in which the vehicle was operated in such a way as to satisfy the enabling criteria for a given diagnostic, and this diagnostic will consider this cycle to be one trip. However, another diagnostic with a different set of enable criteria (which were not met) during this driving event, would not consider it a trip. No trip will occur for that particular diagnostic until the vehicle is driven in such a way as to meet all the enable criteria.

The Diagnostic Executive

The Diagnostic Executive is a unique segment of software which is designed to coordinate and prioritize the diagnostic procedures as well as define the protocol for recording and displaying their results. The main responsibilities of the Diagnostic Executive are listed as the following:

- Commanding the MIL ("Check Engine" lamp) on and off
- DTC logging and clearing

Downloaded from www.Manualslib.com manuals search engine

- Freeze Frame data for the first emission related DTC recorded
- Non-emission related Service Lamp
- Operating conditions Failure Records buffer, (the number of records will vary)
- Current status information on each diagnostic
- System Status (I/M ready)

The Diagnostic Executive records DTCs and turns on the MIL when emission-related faults occur. It can also turn off the MIL if the conditions cease which caused the DTC to set.

Diagnostic Information

The diagnostic charts and functional checks are designed to locate a faulty circuit or component through a process of logical decisions. The charts are prepared with the requirement that the vehicle functioned correctly at the time of assembly and that there are no multiple faults present.

There is a continuous self-diagnosis on certain control functions. This diagnostic capability is complemented by the diagnostic procedures contained in this manual. The language of communicating the source of the malfunction is a system of diagnostic trouble codes. When a malfunction is detected by the control module, a diagnostic trouble code is set and the Malfunction Indicator Lamp (MIL) ("Check Engine" lamp) is illuminated.

Malfunction Indicator Lamp (MIL)

The Malfunction Indicator Lamp (MIL) looks the same as the MIL you are already familiar with ("Check Engine" lamp). However, OBD II requires that it illuminate under a strict set of guide lines.

Basically, the MIL is turned on when the PCM detects a DTC that will impact vehicle emissions.

The MIL is under the control of the Diagnostic Executive. The MIL will be turned on if an emissions-related diagnostic test indicates a malfunction has occurred. It will stay on until the system or component passes the same test, for three consecutive trips, with no emissions related faults.

If the vehicle is experiencing a misfire malfunction which may cause damage to the Three-Way Catalytic Converter (TWC), the MIL will flash once per second. This will continue until the vehicle is outside of speed and load conditions which could cause possible catalyst damage, and the MIL will stop flashing and remain on steady.

Extinguishing the MIL

When the MIL is on, the Diagnostic Executive will turn off the MIL after *three(3) consecutive* trips that a "test passed" has been reported for the diagnostic test that originally caused the MIL to illuminate.

Although the MIL has been turned off, the DTC will remain in the PCM memory (both Freeze Frame and Failure Records) until *forty(40) warm-up cycles after no faults* have been completed.

If the MIL was set by either a fuel trim or misfire-related DTC, additional requirements must be met. In addition to the requirements stated in the previous paragraph, these requirements are as follows:

- The diagnostic tests that are passed must occur within 375 RPM of the RPM data stored at the time the last test failed.
- Plus or minus ten (10) percent of the engine load that was stored at the time the last failed.
- Similar engine temperature conditions (warmed up or warming up) as those stored at the time the last test failed.

Meeting these requirements ensures that the fault which turned on the MIL has been corrected.

The MIL ("Check Engine" lamp) is on the instrument panel and has the following function:

- It informs the driver that a fault affects vehicle emission levels has occurred and that the vehicle should be taken for service as soon as possible.
- As a bulb and system check, the MIL will come "ON" with the key "ON" and the engine not running. When the engine is started, the MIL will turn "OFF."
- When the MIL remains "ON" while the engine is running, or when a malfunction is suspected due to a driveability or emissions problem, a Powertrain On-Board Diagnostic (OBD ll) System Check must be performed. The procedures for these checks are given in On-Board Diagnostic (OBD) System Check. These checks will expose faults which may not be detected if other diagnostics are performed first.

DTC Types

Each DTC is directly related to a diagnostic test. The Diagnostic Management System sets DTC based on the failure of the tests during a trip or trips. Certain tests must fail two (2) consecutive trips before the DTC is set. The following are the four (4) types of DTCs and the characteristics of those codes:

- Type A
  - Emissions related
  - Requests illumination of the MIL of the first trip with a fail
  - Stores a History DTC on the first trip with a fail
  - Stores a Freeze Frame (if empty)
  - Stores a Fail Record
  - Updates the Fail Record each time the diagnostic test fails
- Type B
  - Emissions related
  - "Armed" after one (1) trip with a fail
  - "Disarmed" after one (1) trip with a pass
  - Requests illumination of the MIL on the *second consecutive trip* with a fail
  - Stores a History DTC on the second consecutive trip with a fail (The DTC will be armed after the first fail)
  - Stores a Freeze Frame on the second consecutive trip with a fail (if empty)
  - Stores a Fail Record when the first test fails (not dependent on *consecutive trip* fails)
  - Updates the Fail Record each time the diagnostic test fails

Downloaded from www.Manualslib.com manuals search engine

(Some special conditions apply to misfire and fuel trim DTCs)

- Type C (if the vehicle is so equipped)
  - Non-Emissions related
  - Requests illumination of the Service Lamp or the service message on the Drive Information Center (DIC) on the *first trip* with a fail
  - Stores a History DTC on the *first trip* with a fail
  - *Does not* store a Freeze Frame
  - Stores Fail Record when test fails
  - Updates the Fail Record each time the diagnostic test fails
- Type D
  - Non-Emissions related
  - Not request illumination of any lamp
  - Stores a History DTC on the *first trip* with a fail
  - *Does not* store a Freeze Frame
  - Stores Fail Record when test fails
  - Updates the Fail Record each time the diagnostic test fails

IMPORTANT: Only four Fail Records can be stored. Each Fail Record is for a different DTC. It is possible that there will not be Fail Records for every DTC if multiple DTCs are set.

Special Cases of Type B Diagnostic Tests

Unique to the misfire diagnostic, the Diagnostic Executive has the capability of alerting the vehicle operator to potentially damaging levels of misfire. If a misfire condition exists that could potentially damage the catalytic converter as a result of high misfire levels, the Diagnostic Executive will command the MIL to “flash” at a rate of once per seconds during those the time that the catalyst damaging misfire condition is present.

Fuel trim and misfire are special cases of *Type B* diagnostics. Each time a fuel trim or misfire malfunction is detected, engine load, engine speed, and engine coolant temperature are recorded.

When the ignition is turned off, the last reported set of conditions remain stored. During subsequent ignition cycles, the stored conditions are used as reference for similar conditions. If a malfunction occurs during two consecutive trips, the Diagnostic Executive treats the failure as a normal *Type B* diagnostic, and not use the stored conditions. However, if a malfunction occurs on two non-consecutive trips, the stored conditions are compared with the current conditions. The MIL will then illuminate under the following conditions:

- When the engine load conditions are within 10% of the previous test that failed.
- Engine speed is within 375 rpm, of the previous test that failed.
- Engine coolant temperature is in the same range as the previous test that failed.

Storing and Erasing Freeze Frame Data and Failure Records

Government regulations require that engine operating conditions be captured whenever the MIL is illuminated. The data captured is called Freeze Frame data. The Freeze Frame data is very similar to a single record of operating conditions. Whenever the MIL is illuminated, the corresponding record of operating conditions is recorded to the Freeze Frame buffer.

Freeze Frame data can only be overwritten with data associated with a misfire or fuel trim malfunction. Data from these faults take precedence over data associated with any other fault. The Freeze Frame data will not be erased unless the associated history DTC is cleared.

Each time a diagnostic test reports a failure, the current engine operating conditions are recorded in the *Failure Records* buffer. A subsequent failure will update the recorded operating conditions. The following operating conditions for the diagnostic test which failed *typically* include the following parameters:

- Air Fuel Ratio
- Air Flow Rate
- Fuel Trim
- Engine Speed
- Engine Load
- Engine Coolant Temperature
- Vehicle Speed
- TP Angle
- MAP/BARO
- Injector Base Pulse Width
- Loop Status

Intermittent Malfunction Indicator Lamp

In the case of an “intermittent” fault, the MIL (“Check Engine” lamp) may illuminate and then (after three trips) go “OFF”. However, the corresponding diagnostic trouble code will be stored in the memory. When unexpected diagnostic trouble codes appear, check for an intermittent malfunction.

A diagnostic trouble code may reset. Consult the “Diagnostic Aids” associated with the diagnostic trouble code. A physical inspection of the applicable sub-system most often will resolve the problem.

Data Link Connector (DLC)

The provision for communication with the control module is the Data Link Connector (DLC). It is located at the lower left of the instrument panel behind a small square cover. The DLC is used to connect to the Tech 2 Scan Tool. Some common uses of the Tech 2 are listed below:

- Identifying stored Diagnostic Trouble Codes (DTCs).
- Clearing DTCs.
- Performing output control tests.
- Reading serial data.

Downloaded from www.Manualslib.com manuals search engine

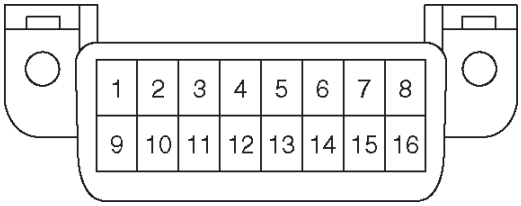

TS24064

Decimal/Binary/Hexadecimal Conversions

Beginning in 1996, Federal Regulations require that all auto manufacturers selling vehicles in the United States provide Scan Tool manufacturers with software information to display vehicle operating parameters. All Scan Tool manufacturers will display a variety of vehicle information which will aid in repairing the vehicle. Some Scan Tools will display encoded messages which will aid in determining the nature of the concern. The method of encoding involves the use of a two additional numbering systems: Binary and Hexadecimal.

The binary number system has a base of two numbers. Each digit is either a 0 or a 1. A binary number is an eight digit number and is read from right to left. Each digit has a position number with the farthest right being the 0 position and the farthest left being the 7 position. The 0 position, when displayed by a 1, indicates 1 in decimal. Each position to the left is double the previous position and added to any other position values marked as a 1.

A hexadecimal system is composed of 16 different alpha numeric characters. The alpha numeric characters used are numbers 0 through 9 and letters A through F. The hexadecimal system is the most natural and common approach for Scan Tool manufacturers to display data represented by binary numbers and digital code.

Verifying Vehicle Repair

Verification of vehicle repair will be more comprehensive for vehicles with OBD II system diagnostic. Following a repair, the technician should perform the following steps:

1. Review and record the Fail Records and/or Freeze Frame data for the DTC which has been diagnosed (Freeze Frame data will only be stored for an A or B type diagnostic and only if the MIL has been requested).
2. Clear DTC(s).
3. Operate the vehicle within conditions noted in the Fail Records and/or Freeze Frame data.
4. Monitor the DTC status information for the DTC which has been diagnosed until the diagnostic test associated with that DTC runs.

Following these steps are very important in verifying repairs on OBD II systems. Failure to follow these steps could result in unnecessary repairs.

Reading Diagnostic Trouble Codes Using The Tech 2 Scan Tool

The procedure for reading diagnostic trouble code(s) is to use a diagnostic Scan Tool. When reading DTC(s), follow instructions supplied by tool manufacturer.

Clearing Diagnostic Trouble Codes

IMPORTANT: Do not clear DTCs unless directed to do so by the service information provided for each diagnostic procedure. When DTCs are cleared, the Freeze Frame and Failure Record data which may help diagnose an intermittent fault will also be erased from memory.

If the fault that caused the DTC to be stored into memory has been corrected, the Diagnostic Executive will begin to count the “warm-up” cycles with no further faults detected, the DTC will automatically be cleared from the PCM memory.

To clear Diagnostic Trouble Codes (DTCs), use the diagnostic Scan Tool “clear DTCs” or “clear information” function. When clearing DTCs follow instructions supplied by the tool manufacturer.

When a Scan Tool is not available, DTCs can also be cleared by disconnecting *one* of the following sources for at least thirty (30) seconds.

NOTE: To prevent system damage, the ignition key must be “OFF” when disconnecting or reconnecting battery power.

- The power source to the control module. Examples: fuse, pigtail at battery PCM connectors etc.
- The negative battery cable. (Disconnecting the negative battery cable will result in the loss of other on-board memory data, such as preset radio tuning).

Downloaded from www.Manualslib.com manuals search engine

Tech 2

From 98 MY, Isuzu dealer service departments are recommended to use the Tech 2 Scan Tool. Please refer to the Tech 2 user guide.

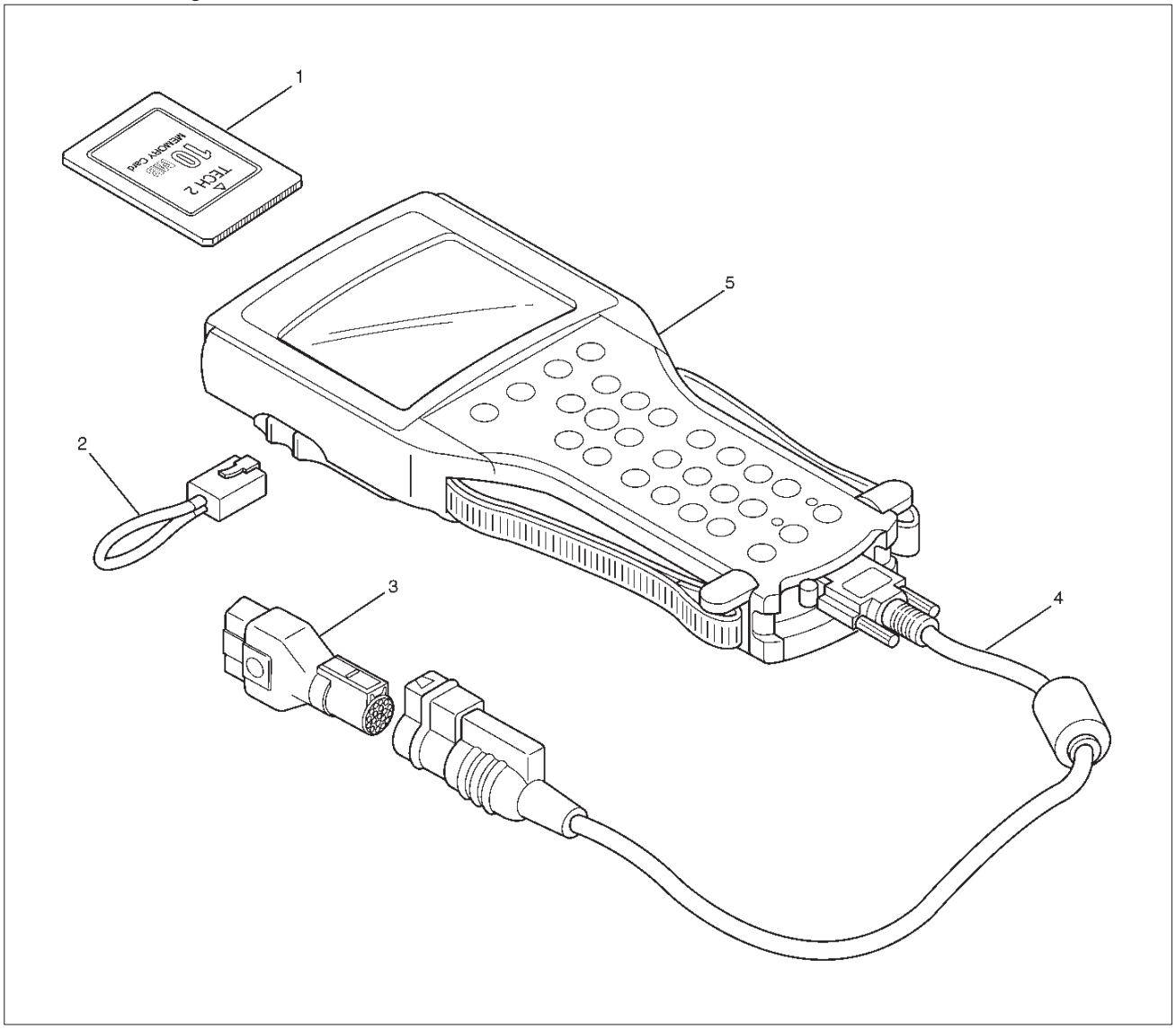

901RW180

Legend

(1) PCMCIA Card
(2) RS 232 Loop Back Connector
(3) SAE 16/19 Adaptor
(4) DLC Cable
(5) Tech–2

Downloaded from www.Manualslib.com manuals search engine

Tech 2 Features

1. Tech 2 is a 12 volt system. Do not apply 24 volts.
2. After connecting and/or installing the Vehicle Communications Interface (VCI) module, PCMCIA card and DLC connector to the Tech 2, connect the tool to the vehicle DLC.
3. Make sure the Tech 2 is powered OFF when removing or installing the PCMCIA card.
4. The PCMCIA card has a capacity of 10 Megabytes which is 10 times greater than the memory of the Tech 1 Mass Storage Cartridge.
5. The Tech 2 has the capability of two snapshots.
6. The PCMCIA card is sensitive to magnetism and static electricity, so care should be taken in the handling of the card.
7. The Tech 2 can plot a graph when replaying a snapshot.
8. Always return to the Main Menu by pressing the EXIT key several times before shutting down.
9. To clear Diagnostic Trouble Codes (DTCs), open Application Menu and press “F1: Clear DTC Info”.

Getting Started

- Before operating the Isuzu PCMCIA card with the Tech 2, the following steps must be performed:

1. The Isuzu 2000 System PCMCIA card (1) inserts into the Tech 2 (5).
2. Connect the SAE 16/19 adapter (3) to the DLC cable (4).
3. Connect the DLC cable to the Tech 2 (5)
4. Make sure the vehicle ignition is off.
5. Connect the Tech 2 SAE 16/19 adapter to the vehicle DLC.

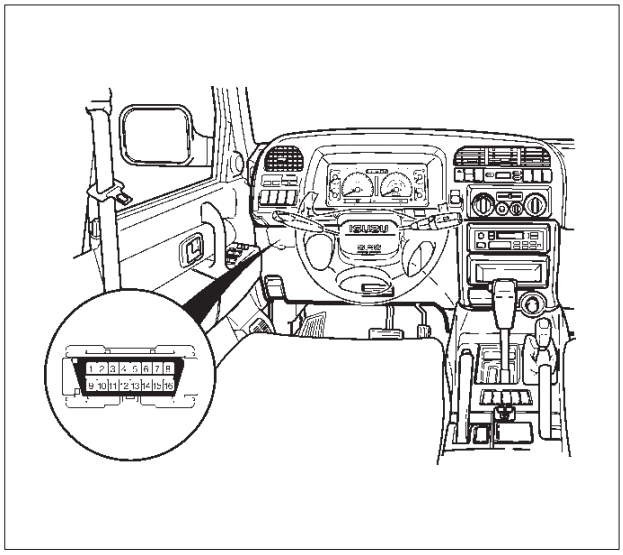

821RW021

6. Turn on the vehicle ignition.
7. Power the Tech 2 ON and verify the Tech 2 power up display.

060RW009

NOTE: The RS232 Loop back connector is only to use for diagnosis of Tech 2. Refer to user guide of the Tech 2.

Downloaded from www.Manualslib.com manuals search engine

Operating Procedure (For Example)

The power up screen is displayed when you power up the tester with the Isuzu systems PCMCIA card. Follow the operating procedure below.

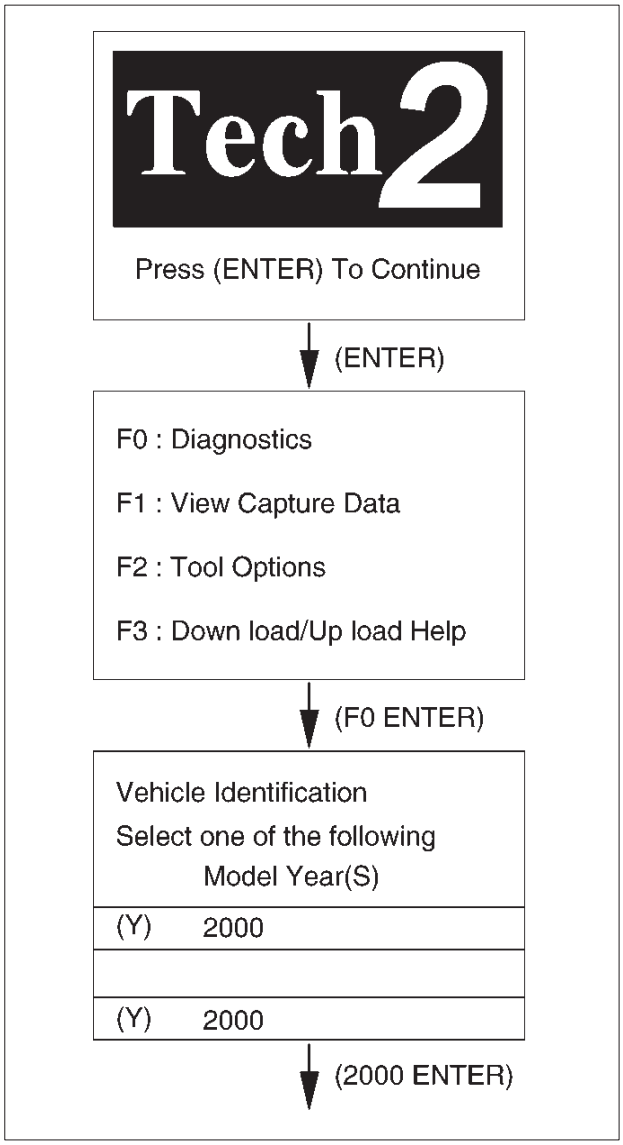

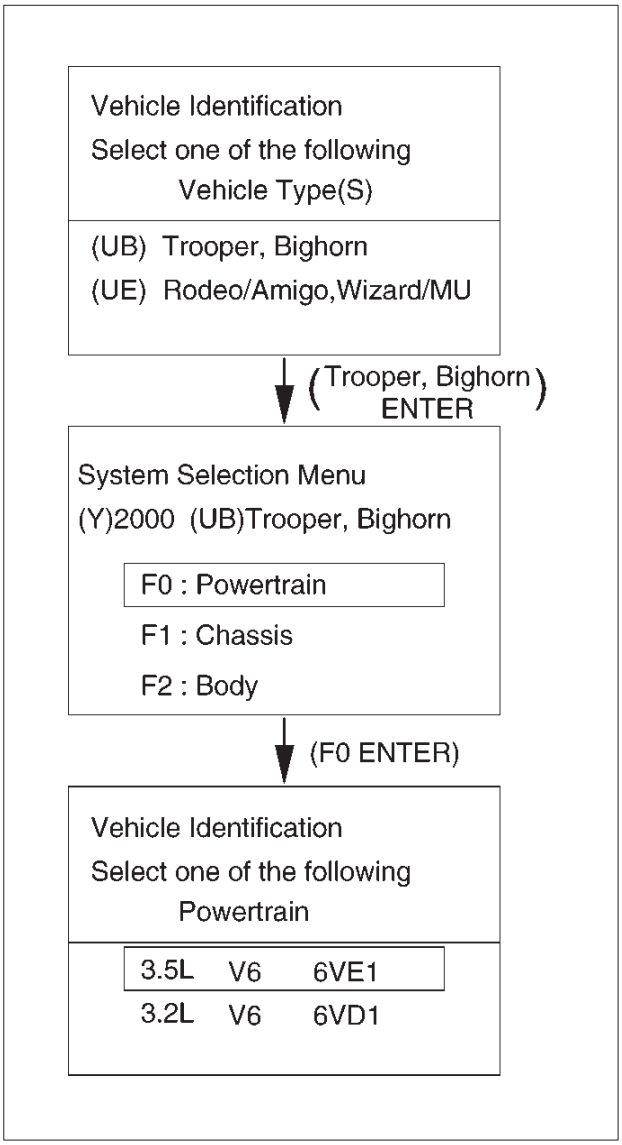

Downloaded from www.Manualslib.com manuals search engine

Menu

- The following table shows which functions are used for the available equipment versions.

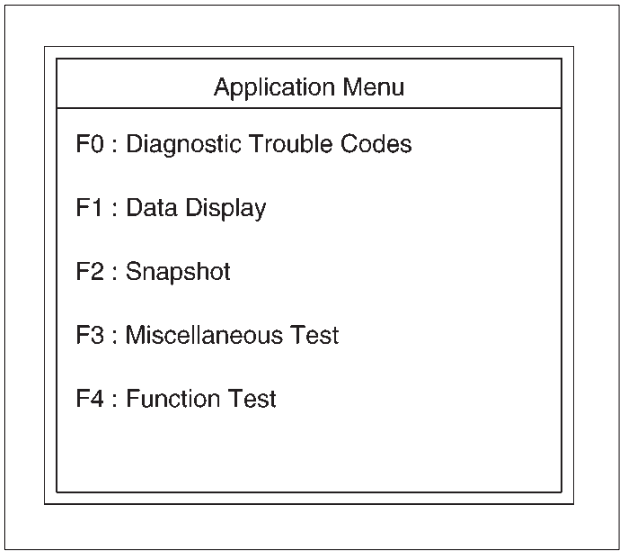

060RY00073

DTC Modes

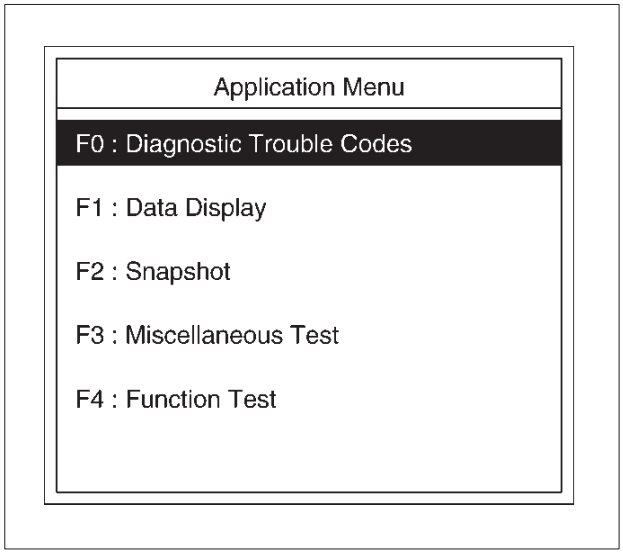

060RY00074

On OBD II vehiles there are options available in Tech 2 DTC mode to display the enhanced information available. After selecting DTC, the following menu appears:

1. Read DTC Info by Priority
2. Freeze Frame
3. Fail Records (not all applications)
4. DTC Info
5. Clear Info

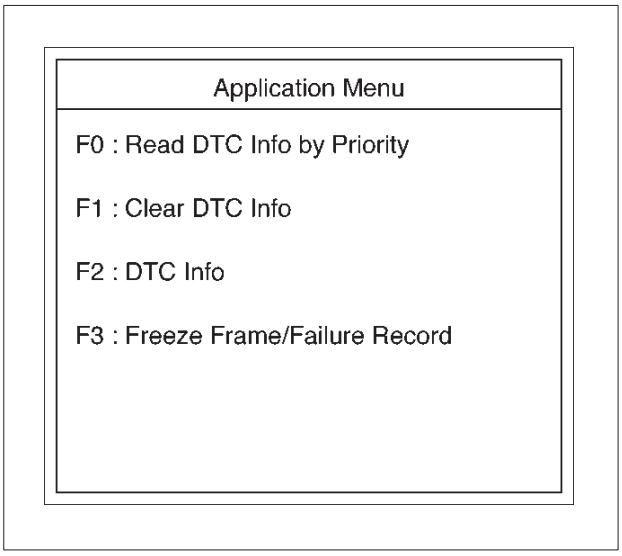

060RW223

The following is a brief description of each of the sub menus in DTC Info and DTC. The order in which they appear here is alphabetical and not necessarily the way they will appear on the Tech 2.

DTC Information Mode

Use the DTC info mode to search for a specific type of stored DTC information.

DTC Status

This selection will display any DTCs that have not run during the current ignition cycle or have reported a test failure during this ignition up to DTCs. DTC tests which run and pass will cause that DTC number to be removed from Tech 2 screen.

Fail This Ignition

This selection will display all DTCs that have failed during the present ignition cycle.

History

This selection will display only DTCs that are stored in the PCM's history memory. It will display all type A and B DTCs that have requested the MIL and have failed within the last 40 warm-up cycles. In addition, it will display all type C and type D DTCs that have failed within the last 40 warm-up cycles.

Last Test Failed

This selection will display only DTCs that have failed the last time the test run. The last test may have run during a previous ignition cycle if a type A or type B DTC is displayed. For type C and type D DTCs, the last failure must have occurred during the current ignition cycle to appear as Last Test Fail.

MILSVC or Message Request

This selection will display only DTCs that are requesting the MIL. Type C and type D DTCs cannot be displayed using this option. This selection will report type B DTCs only after the MIL has been requested.

Downloaded from www.Manualslib.com manuals search engine

Not Run Since Code Cleared

This option will display up to DTCs that have not run since the DTCs were last cleared. Since any displayed DTCs have not run, their condition (passing or failing) is unknown.

Test Failed Since Code Cleared

This selection will display all active and history DTCs that have reported a test failure since the last time DTCs were cleared. DTCs that last failed more than 40 warm-up cycles before this option is selected will not be displayed.

Miscellaneous Test

This test consists of eight menus-Lights, Relays, EVAP, Fuel System, Instruments, EGR Control, Variable Intake Manifold Solenoid, and Injector Balance Tests.
In these tests, Tech 2 sends operating signals to the systems to confirm their operations thereby to judge the normality of electric circuits.
To judge intermittent trouble,

1. Confirm DTC freeze frame data, and match the freeze frame data as test conditions with the data list displayed by Miscellaneous Test.
2. Confirm DTC setting conditions, and match the setting conditions as test conditions with the data list displayed by Miscellaneous Test.
3. Refer to the latest Service Bulletin.
   Check to see if the Latest software is released or not. And then Down Load the LATEST PROGRAMMED SOFTWARE to the replacement PCM.

Lamps Test

This test is conducted check MIL, Up Shift Lamp, Low Fuel Lamp, Reduced Power Lamp and Cruise Control Lamp for its working.
Tech2 must be used for this test.
Test Procedure:

1. Connect Tech 2 to the vehicle DLC.
2. Run the Engine at idle.
3. Select F3: Miscellaneous Test in the Application Menu.

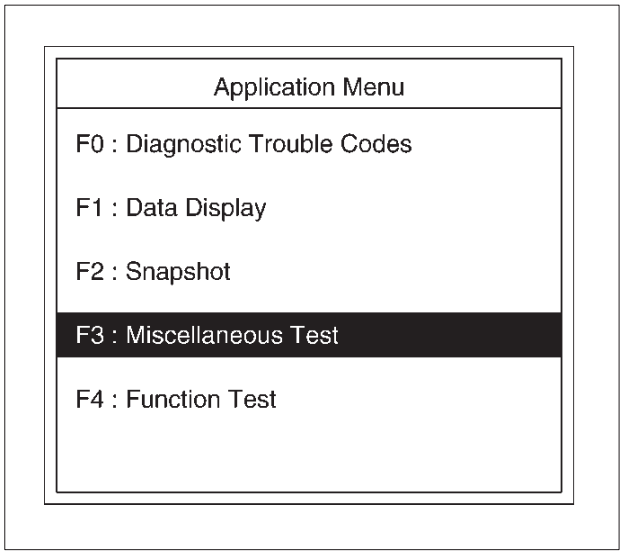

060RY00075

4. Select F0:Lamps Test in the Miscellaneous Test.

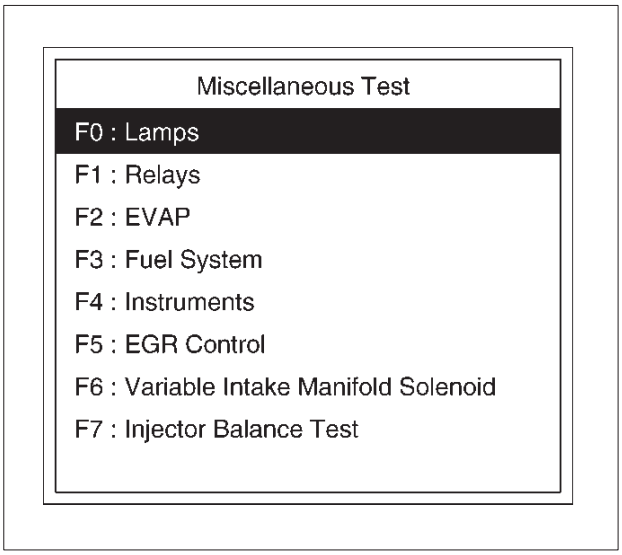

060RY00080

5. Select F0:Malfunction Indicator Lamp.

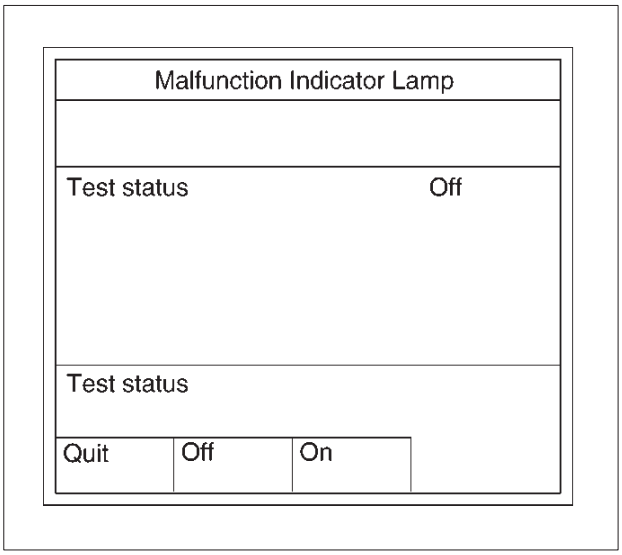

060RY00091

6. Push"On" soft key.
7. Make sure Lamp illuminates.
8. If lamp illuminates, the Lamp is operating correctly.

Downloaded from www.Manualslib.com manuals search engine

9. Select F2: Up Shift Lamp

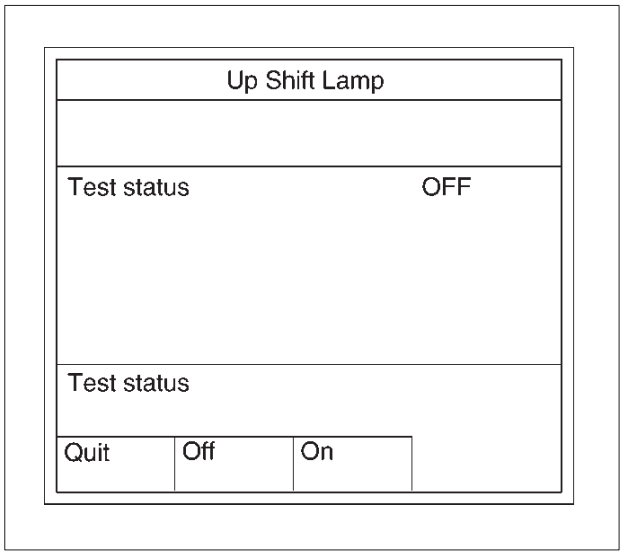

060RY00076

10. Push “On” of soft key.
11. Make sure Lamp illuminates.
12. If Lamp illuminates, the Lamp is operating correctly.
13. Select F2:Low Fuel Lamp

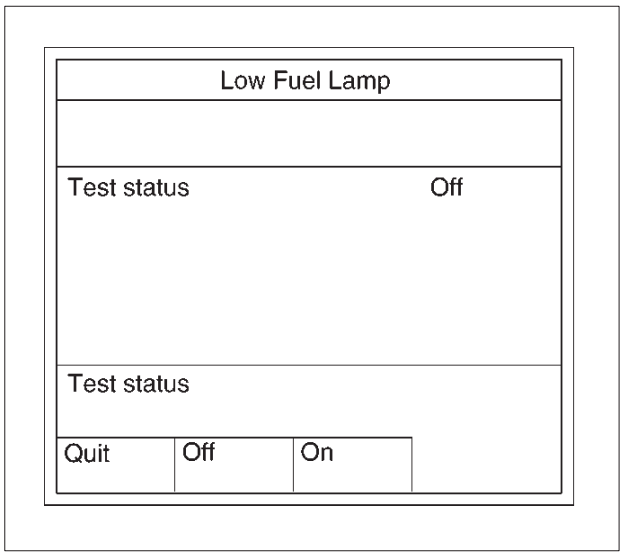

060RY00092

14. Push ”On” of soft key.
15. Make sure Lamp illuminates.
16. If Lamp illuminates, the Lamp is operating correctly.

17. Select F3:Reduced Power Lamp

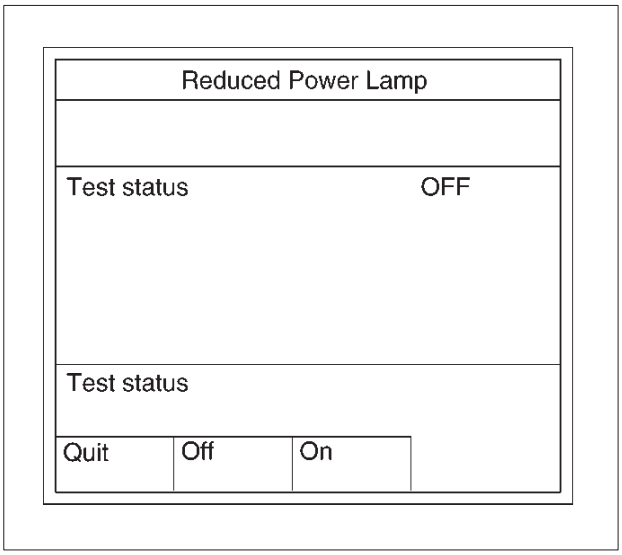

060RY00077

18. Push ”On” of soft key.
19. Make sure Lamp illuminates.
20. If Lamp illuminates, the Lamp is operating correctly.
21. Select F5:Cruise Control Lamp

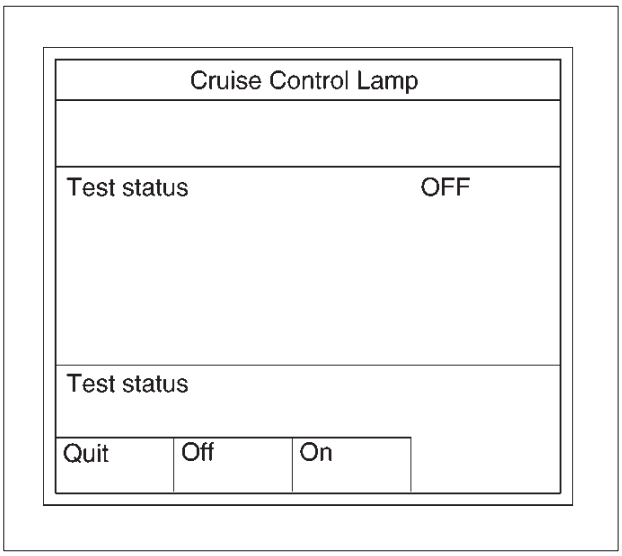

060RY00078

22. Push ”On” of soft key.
23. Make sure Lamp illuminates.
24. If Lamp illuminates, the Lamp is operating correctly.

Downloaded from www.Manualslib.com manuals search engine

Relays Test

This test is conducted to check Fuel Pump Relay and A/C Clutch for proper operation.
Tech 2 must be used for this test.
Test Procedure:

1. Connect Tech 2 to the vehicle DLC.
2. Ignition SW is “On”.
3. Select F3: Miscellaneous Test in the Application Menu.

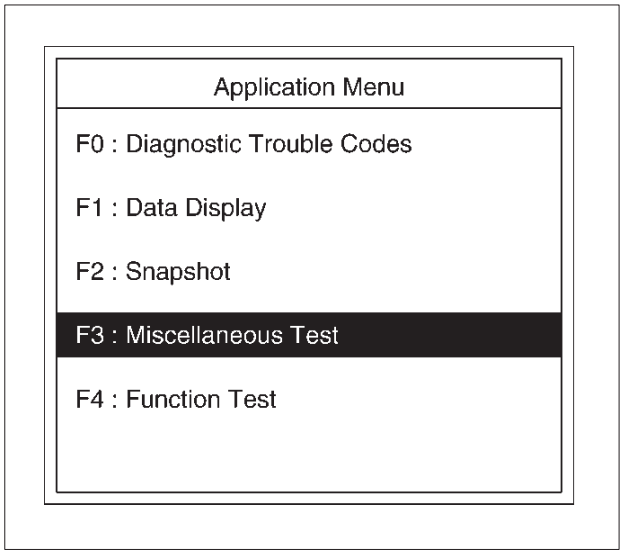

060RY00075

4. Select F1:Relay Test in the Miscellaneous Test.

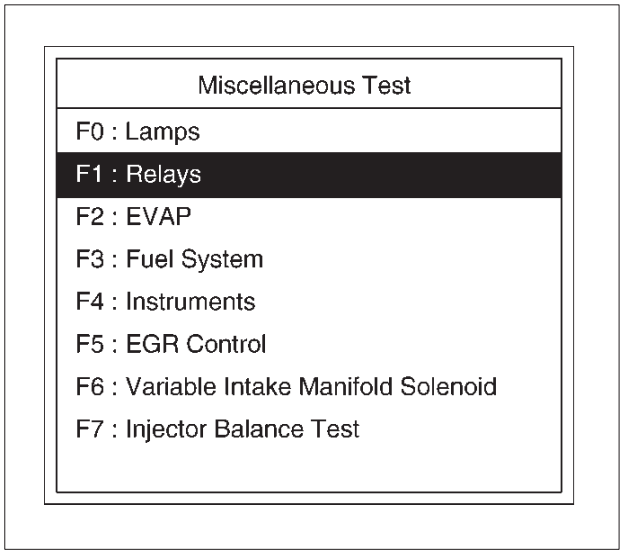

060RY00081

5. Select F0:Fuel Pump Relay.

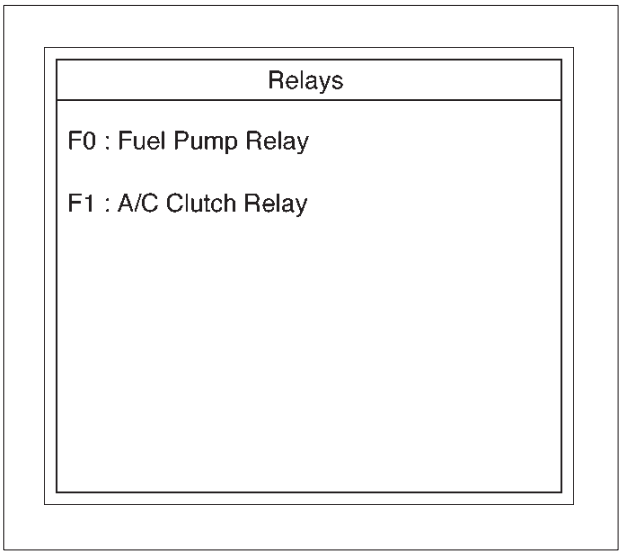

060RX021

6. Push “On” soft key.

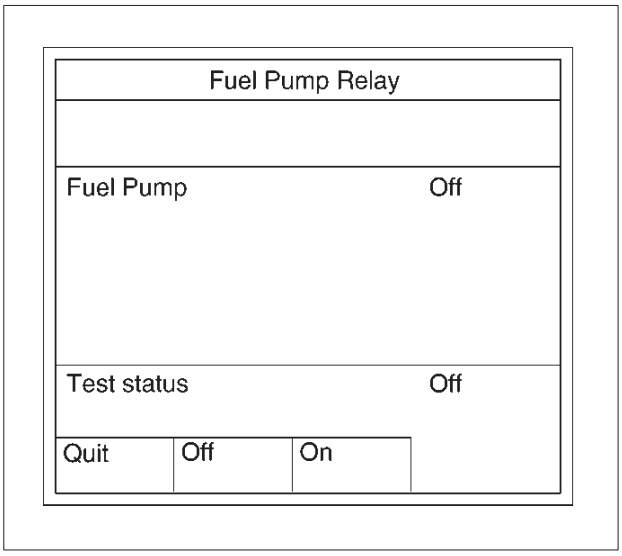

060RY00093

7. Control Fuel Pump Relay and check data list.
8. If the data list changes, the Fuel Pump Relay is normal.
9. Select F1:A/C Clutch Relay.
10. Run the Engine at idle.

Downloaded from www.Manualslib.com manuals search engine

11. Turn on Air Condtioning.

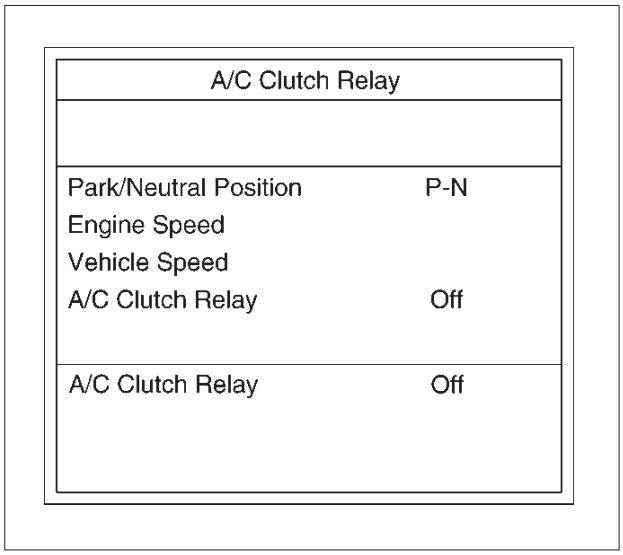

060RY00094

12. Turn “On” and “Off” A/C Switch.
13. Contol A/C Clutch Relay and check data list.
14. If the data list changes, the Fuel Pump Relay is normal.

EVAP Test

This test is conducted to check EVAP system for its power operation.
Tech 2 must be used for this test.
Test Procedure:

1. Connect Tech 2 to the vehicle DLC.
2. Run the Engine at idle.
3. Select F3: Miscellaneous Test in the Application Menu.

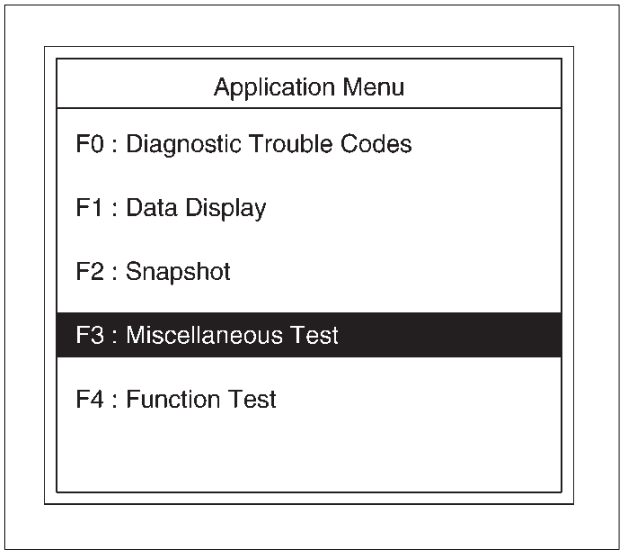

060RY00075

4. Select F2: EVAP Test in the Miscellaneous Test.

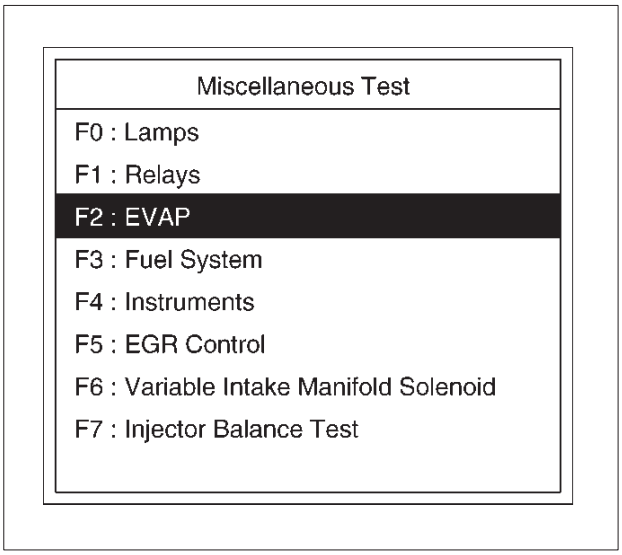

060RY00082

5. Select F0: Purge Solenoid.

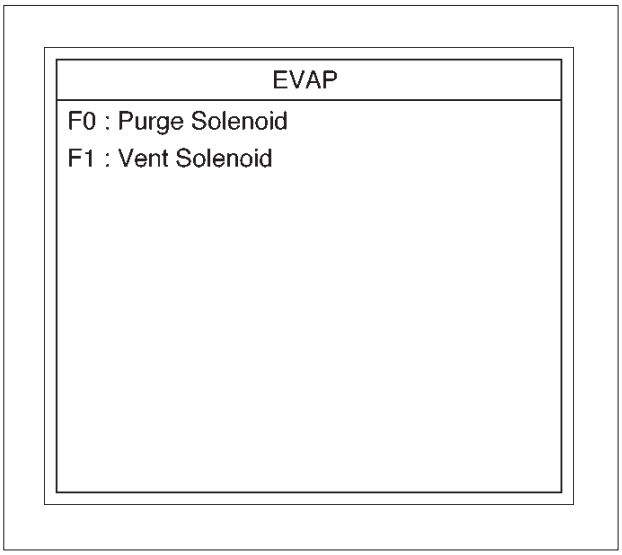

060RX025

Downloaded from www.Manualslib.com manuals search engine

6. Push “Decrease” or “Increase” soft key.

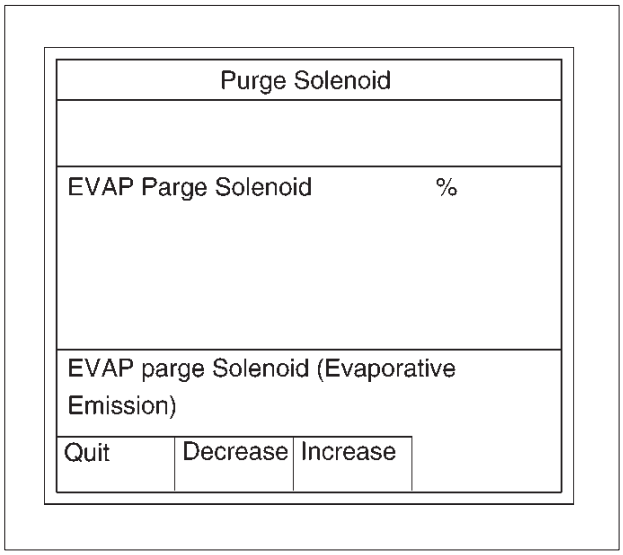

060RY00095

7. Control EVAP Purge Solenoid and check a data list.
8. If the data list changes, the Purge Solenoid is normal.
9. Turn engine off, turn ignition SW “On”.
10. Select F1:EVAP Vent Solenoid.

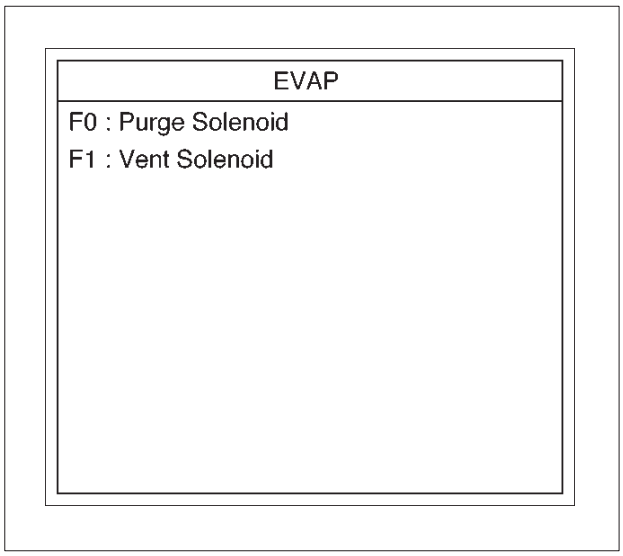

060RX025

11. Push “On” or “Off” soft key.

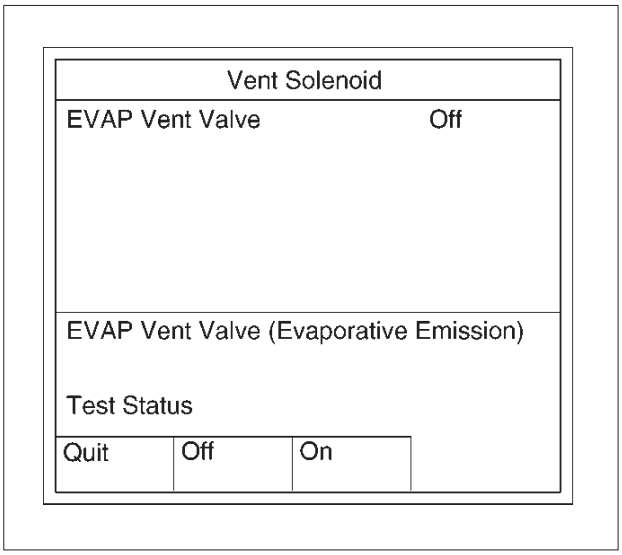

060RY00096

12. Control EVAP Vent Solenoid and check data list.
13. If the data list changes, the EVAP Vent Solenoid is normal.

Fuel System Test

This test is conducted check Fuel system for proper operation.
Tech 2 must be used for this test.
Test Procedure:

1. Connect Tech 2 to the vehicle DLC.
2. Ignition SW is “On”.
3. Select F3: Miscellaneous Test in the Application Menu.

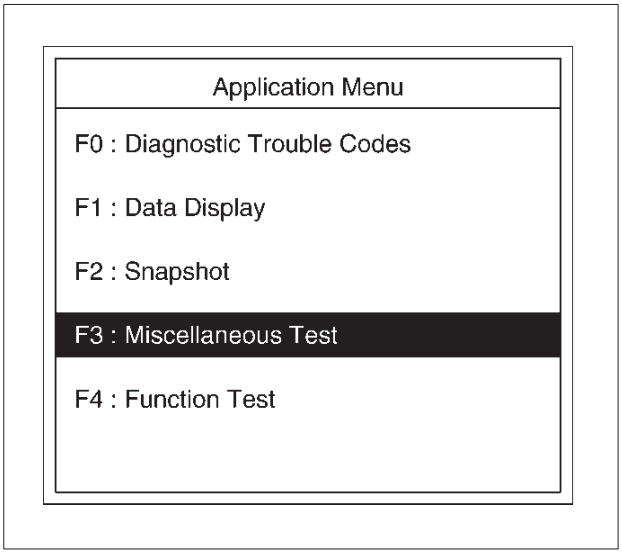

060RY00075

Downloaded from www.Manualslib.com manuals search engine

4. Select F3: Fuel System in the Miscellaneous Menu.

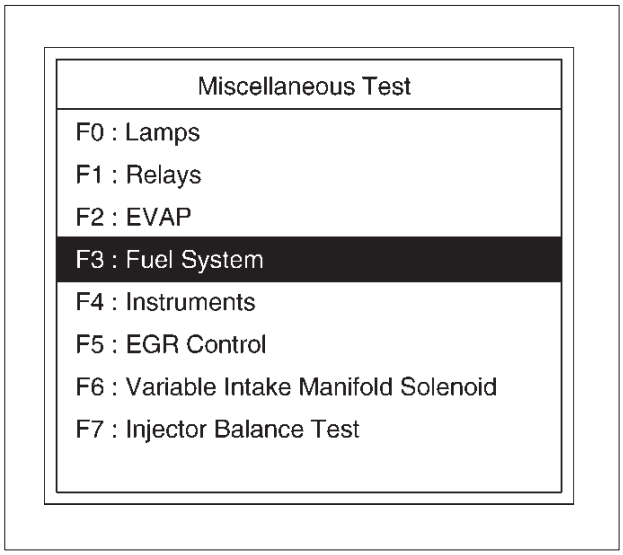

060RY00083

5. Select F0: Fuel Trim Enable.

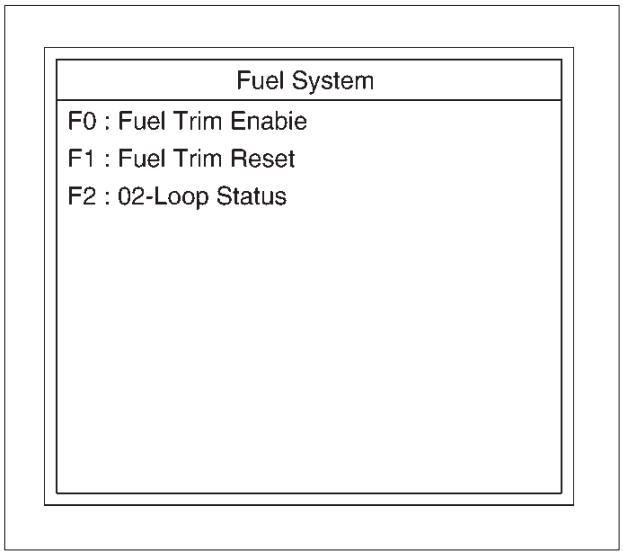

060RY00079

6. Push “Disable” or “Enable” soft key.

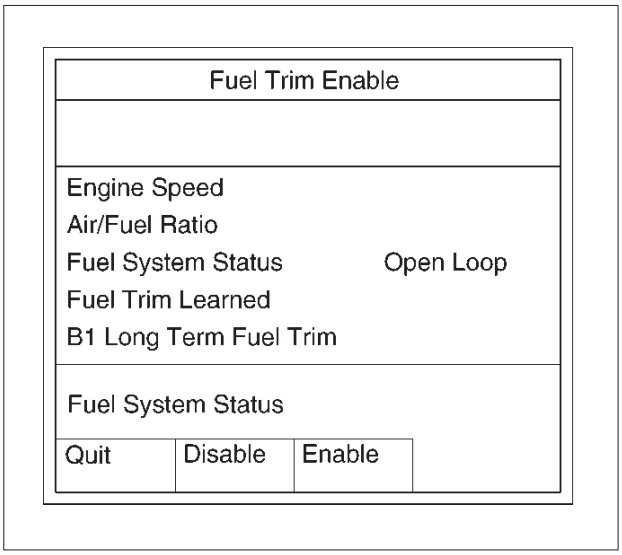

060RY00097

7. Control Fuel Trim and check data list.
8. If data list changes, the Fuel Trim is normal.
9. Select F1: Fuel Trim Reset.

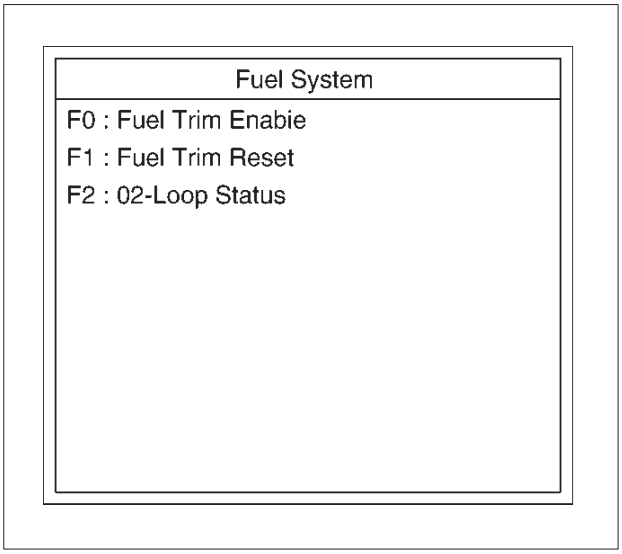

060RY00079

Downloaded from www.Manualslib.com manuals search engine

10. Push “Reset” of soft key.

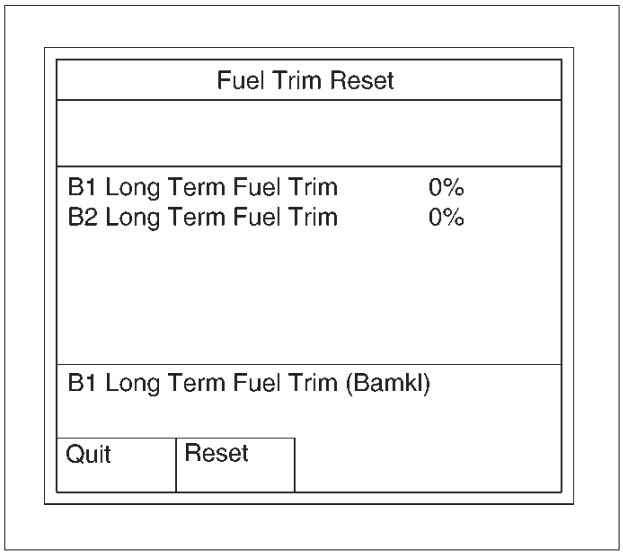

060RY00098

11. Select F2: O2-Loop status.

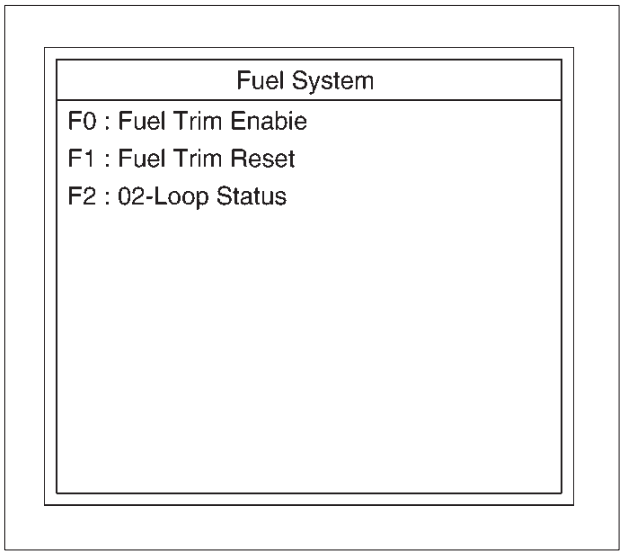

060RY00079

12. This test is check the “Closed Loop Status” performance.

13. Push “Open Loop” or “Closed Loop” soft key.

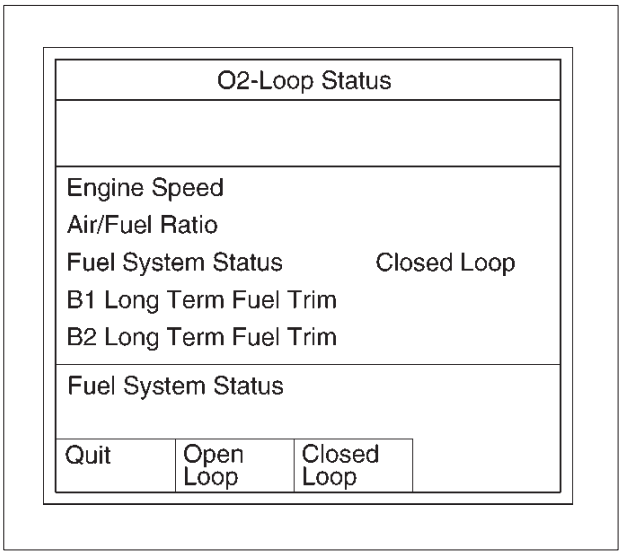

060RY00099

14. Control O2-Loop and check data list.
15. If data list changes, the O2-Loop is normal.

Instruments Test

This test is conducted check Instruments for proper operation.
Tech 2 must be used for this test.
Test Procedure:

1. Connect Tech 2 to the vehicle DLC.
2. Ignition SW is “On”.
3. Select F3: Miscellaneous Test in the Application Menu.

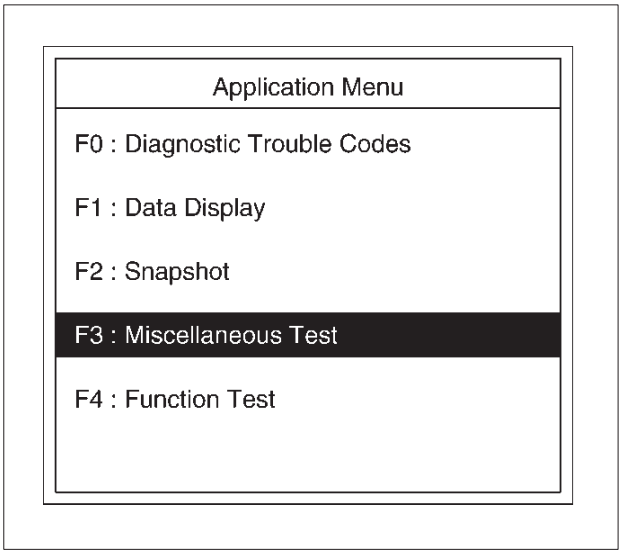

060RY00075

Downloaded from www.Manualslib.com manuals search engine

4. Select F4: Instruments in the Miscellaneous Menu.

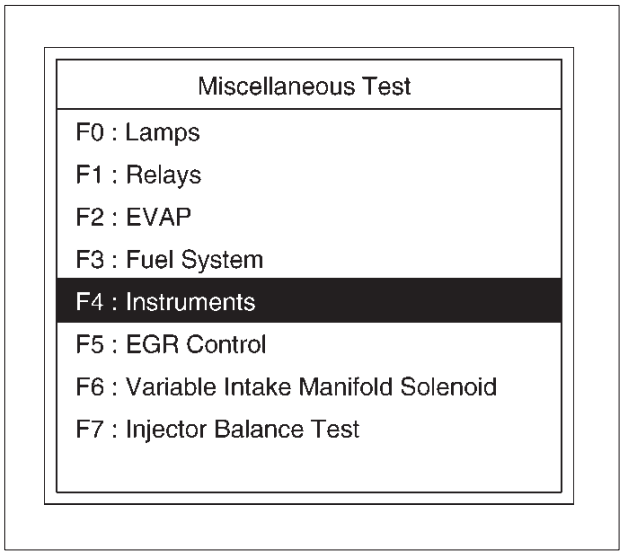

060RY00106

5. Select F0: Fuel Gauge level.

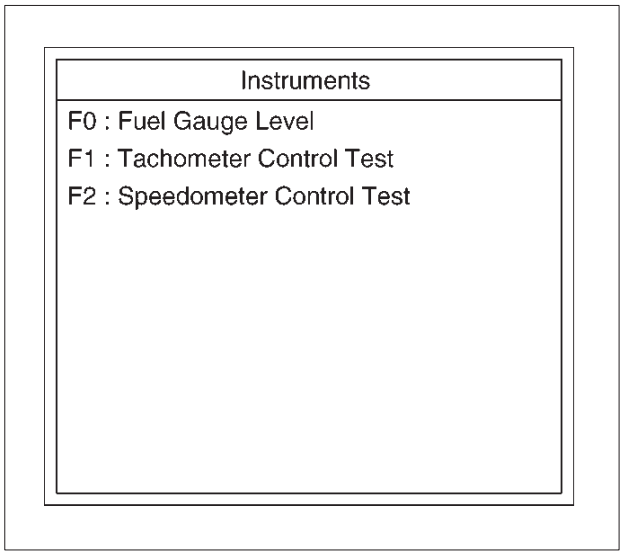

060RY00107

6. Push “Decrease” or “Increase” soft key.

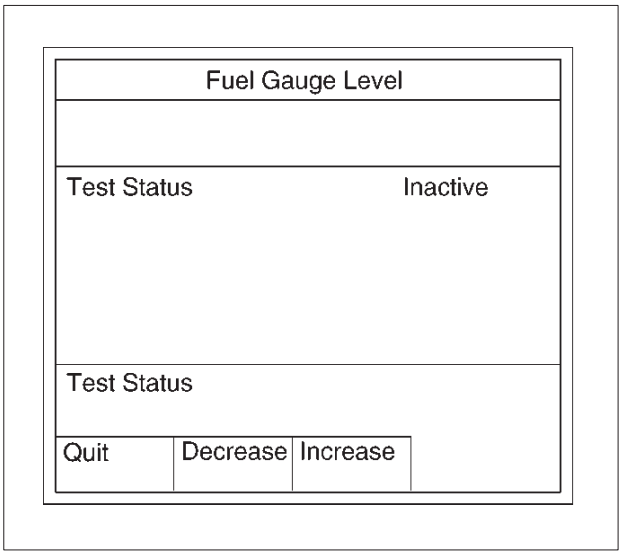

060RY00100

7. Control Fuel Level and check data list.
8. If data list and Fuel gauge meter changes, Fuel Gauge level is normal.
9. Select F1: Tachometer Control Test.

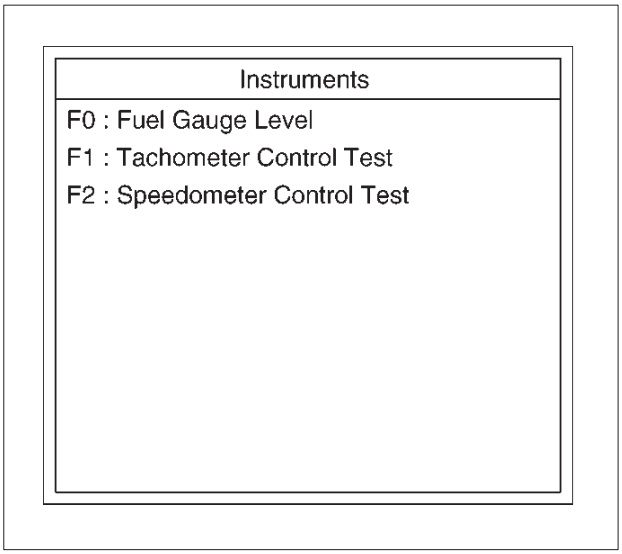

060RY00107

Downloaded from www.Manualslib.com manuals search engine

10. Push “Inactive” or “active” soft key.

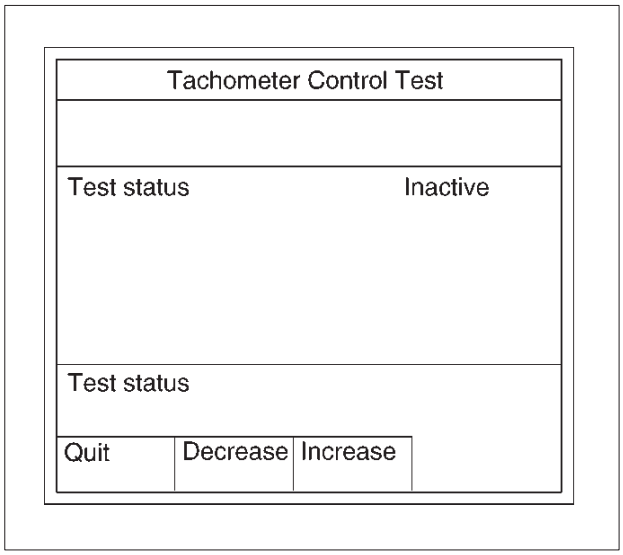

060RY00101

11. Control tachometer and data list.
12. If data list and meter changes, the tachometer control is normal.

EGR Control Test

This test is conducted check EGR valve for proper operation.
Tech 2 must be used for this test.
Test Procedure:

1. Connect Tech 2 to the vehicle DLC.
2. Run the Engine at idle.
3. Select F3: Miscellaneous Test in the Application Menu.

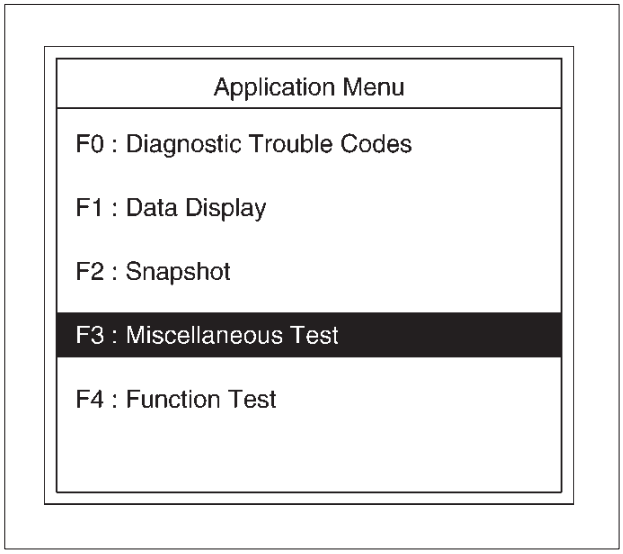

060RY00075

4. Select F5: EGR Control Test in the Miscellaneous Test.

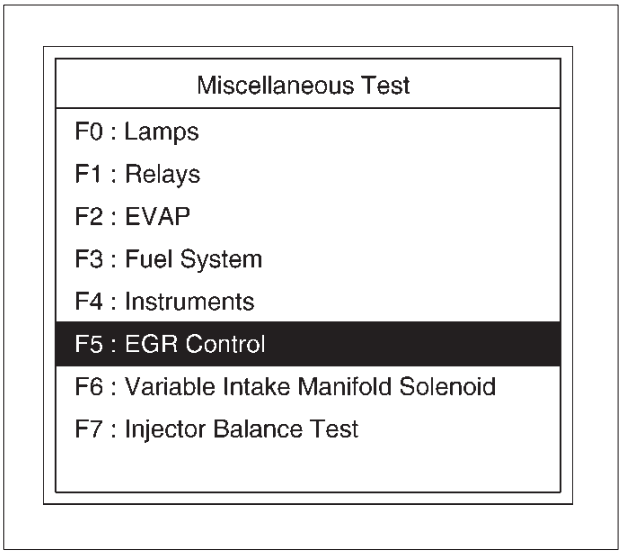

060RY00084

5. Control EGR Valve and check data list.

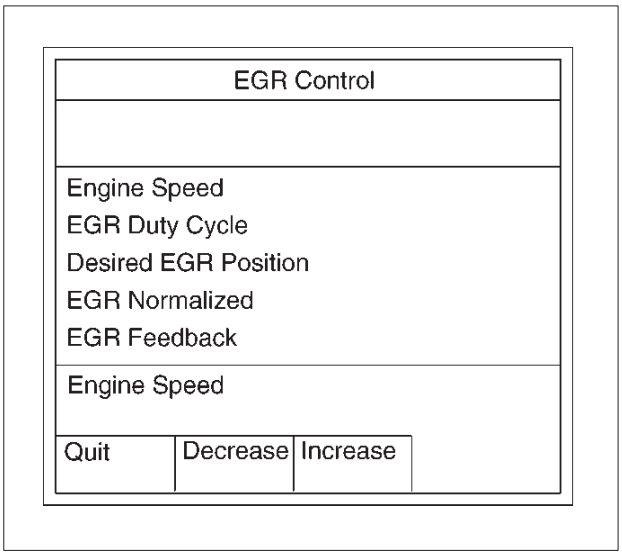

060RY00103

6. If data list changes, the EGR Contol is normal.

Variable Intake Manifold Solenoid Test

This test is conducted check VIM Solenoid for proper operation.
Tech 2 must be used for this test.
Test Procedure:

1. Connect Tech 2 to the vehicle DLC.

Downloaded from www.Manualslib.com manuals search engine

2. Ignition SW is “On”.

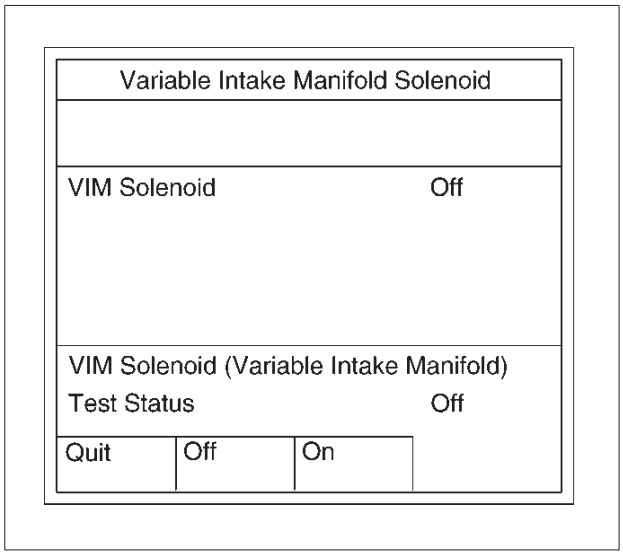

060RY00104

3. Select F3: Miscellaneous Test in the Application Menu.

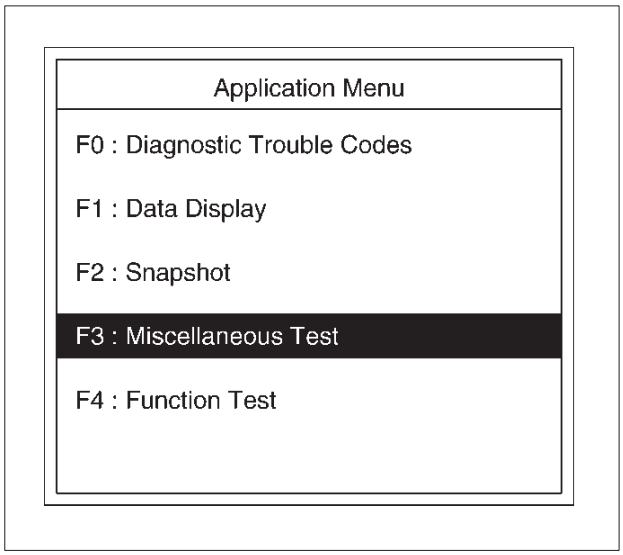

060RY00075

4. Select F6: Variable Intake Manifold Solenoid Test.

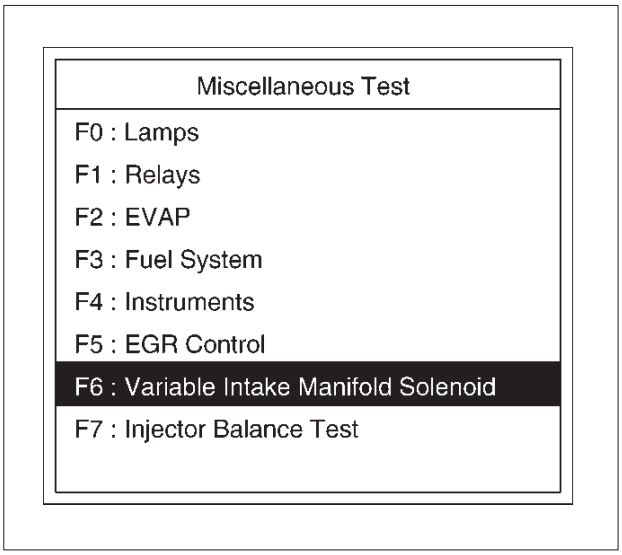

060RY00085

5. Push “On” or “Off” of soft key.

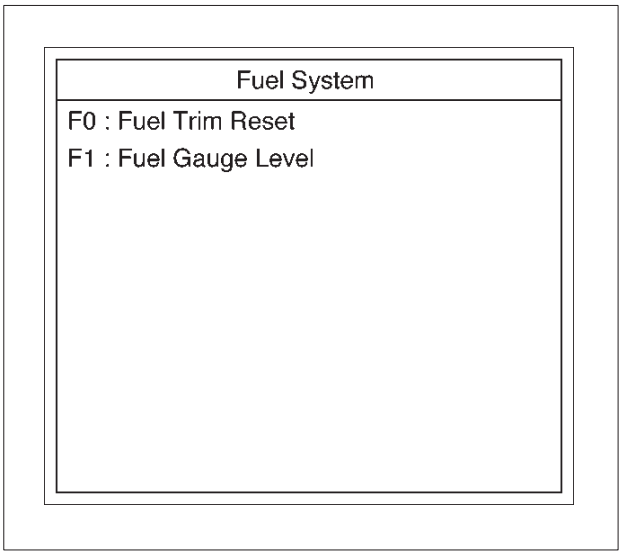

060RX028

6. Control VIM Solenoid check data list.
7. If data list changes, the VIM Solenoid is normal.

Downloaded from www.Manualslib.com manuals search engine

Injector Balance Test

This test is conducted to make sure the appropriate electric signals are being sent to injectors Nos. 1–6.
Tech 2 must be used for this test.
Test Procedure:

1. Connect Tech 2 to the vehicle DLC.
2. Run the Engine at idle.
3. Select F3: Miscellaneous Test in the Application Menu.

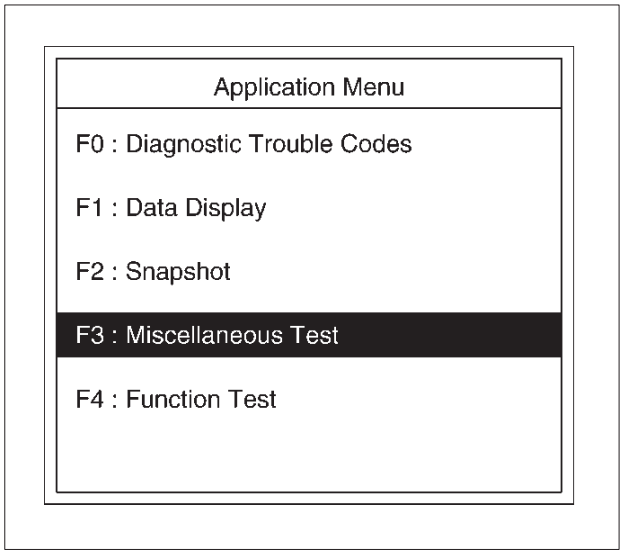

060RY00075

4. Select F7: Injector Balance Test in the Miscellaneous Test.

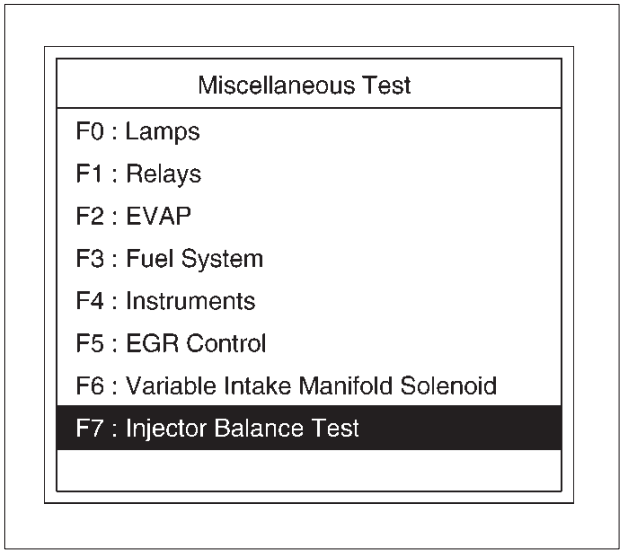

060RY00086

5. Select injector number and push “injector off” soft key.

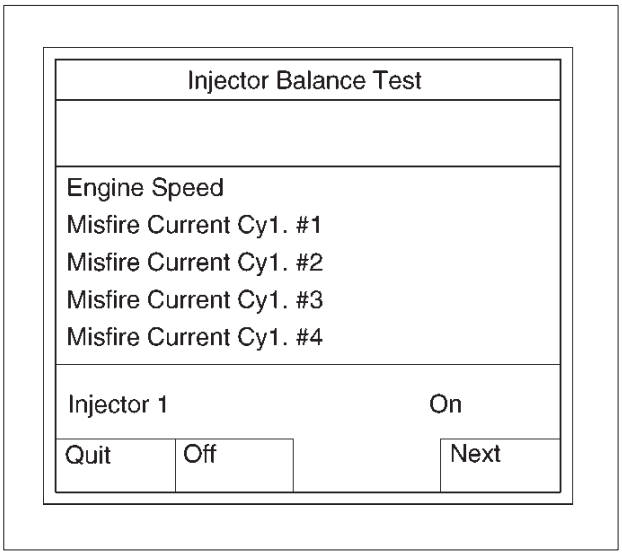

060RY00105

6. Make sure of engine speed change.
7. If engine speed changes, the injector electric circuit is normal.
   If engine speed does not change, the injector electric circuit or the injector itself is not normal.

Plotting Snapshot Graph

This test selects several necessary items from the data list to plot graphs and makes data comparison on a long term basis. It is an effective test particularly in emission related evaluations.

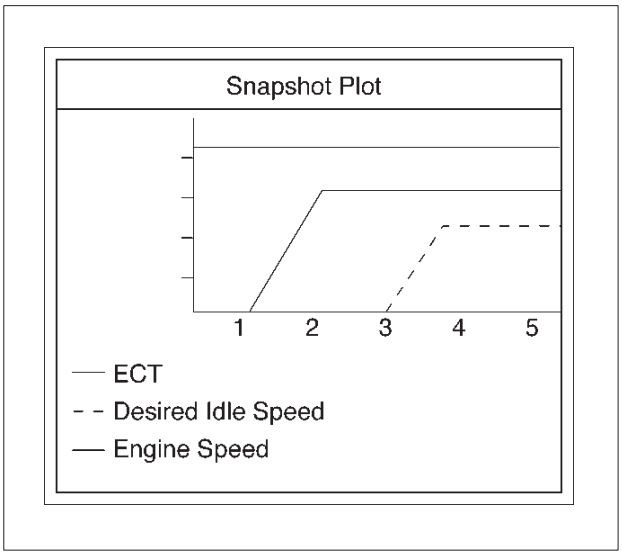

060RX037

For trouble diagnosis, you can collect graphic data (snap shot) directly from the vehicle.
You can replay the snapshot data as needed. Therefore, accurate diagnosis is possible, even though the vehicle is not available.

Downloaded from www.Manualslib.com manuals search engine

Plotting Graph Flow Chart (Plotting graph after obtaining vehicle information)

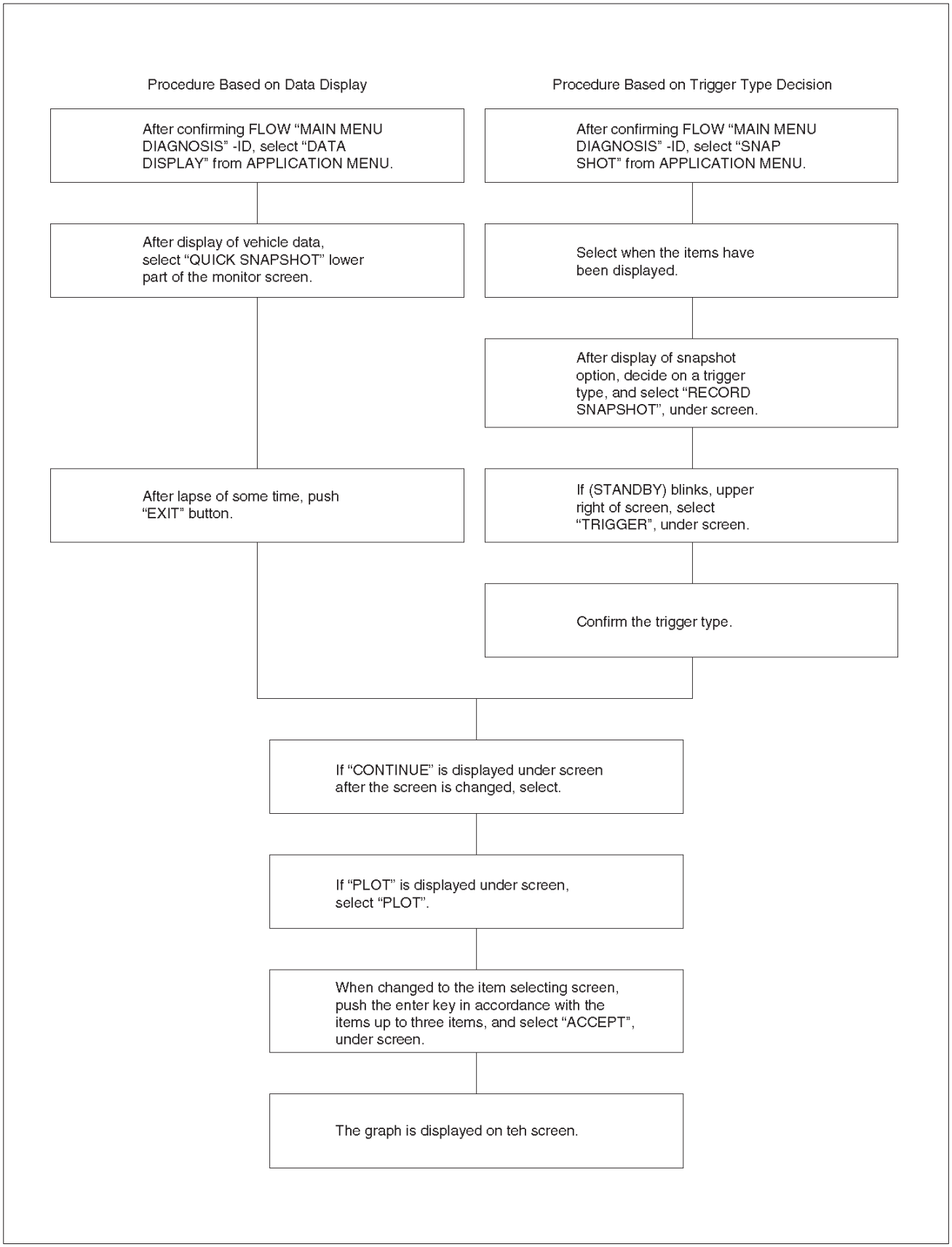

D06RY00167

Downloaded from www.Manualslib.com manuals search engine

Flow Chart for Snapshot Replay (Plotting Graph)

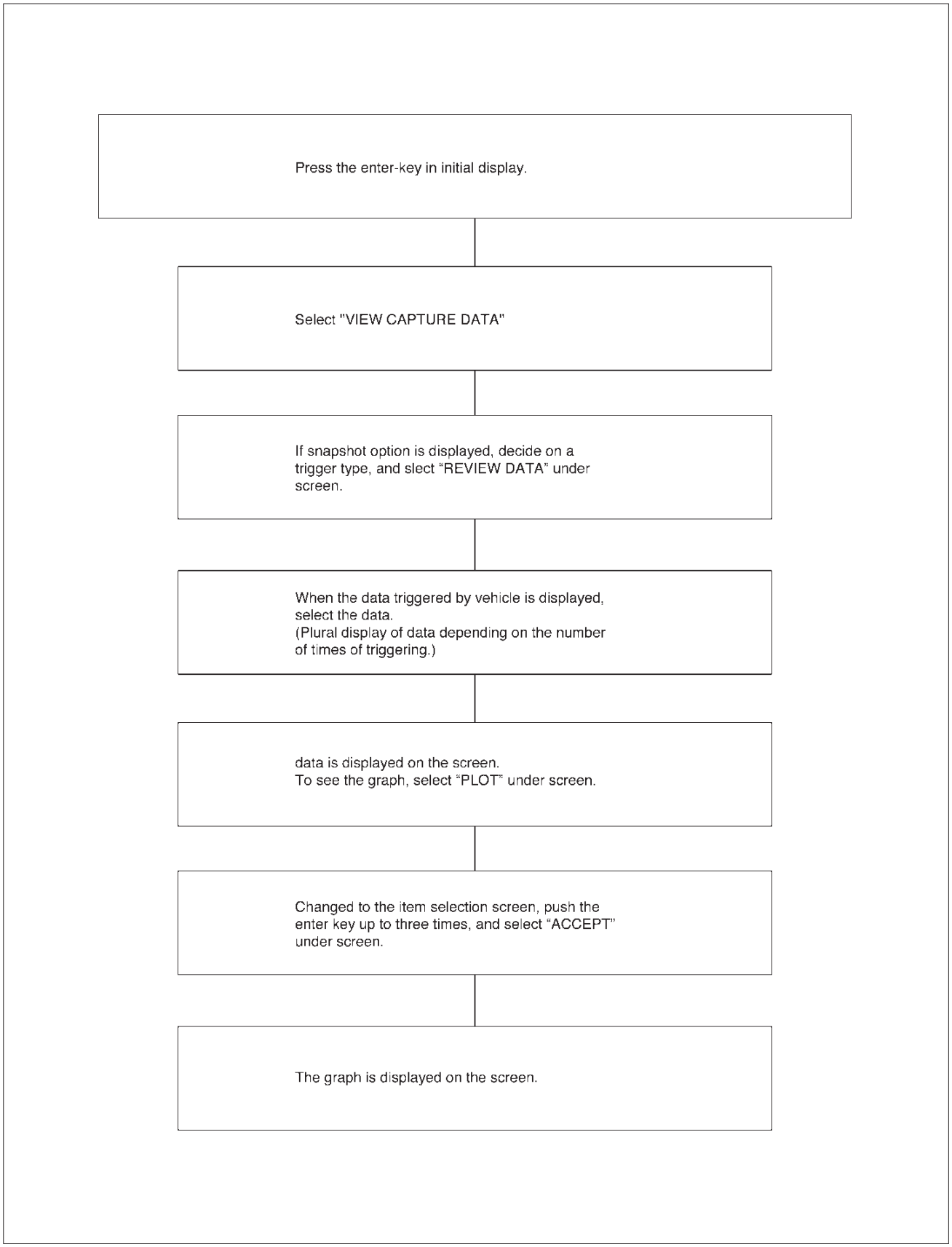

060RX040

Downloaded from www.Manualslib.com manuals search engine

Primary System-Based Diagnostic

Primary System-Based Diagnostic

There are primary system-based diagnostics which evaluate system operation and its effect on vehicle emissions. The primary system-based diagnostics are listed below with a brief description of the diagnostic function:

Oxygen Sensor Diagnosis

The fuel control heated oxygen sensors (Bank 1 HO2S 1 and Bank 2 HO2S 1) are diagnosed for the following conditions:

- Heater performance (time to activity on cold start)
- Slow response
- Response time (time to switch R/L or L/R)
- Inactive signal (output steady at bias voltage – approx. 450 mV)
- Signal fixed high
- Signal fixed low

The catalyst monitor heated oxygen sensors (Bank 1 HO2S 2 and Bank 2 HO2S 2) are diagnosed for the following conditions:

- Heater performance (time to activity on cold start).
- Signal fixed low during steady state conditions or power enrichment (hard acceleration when a rich mixture should be indicated).
- Signal fixed high during steady state conditions or deceleration mode (deceleration when a lean mixture should be indicated).
- Inactive sensor (output steady at approx. 438 mV).

If the oxygen sensor pigtail wiring, connector or terminal are damaged, the entire oxygen sensor assembly must be replaced. DO NOT attempt to repair the wiring, connector or terminals. In order for the sensor to function properly, it must have clean reference air provided to it. This clean air reference is obtained by way of the oxygen sensor wire(s). Any attempt to repair the wires, connector or terminals could result in the obstruction of the reference air and degrade oxygen sensor performance. Refer to *On-Vehicle Service, Heated Oxygen Sensors* in this section.

Fuel Control Heated Oxygen Sensor

The main function of the fuel control heated oxygen sensors is to provide the control module with exhaust stream oxygen content information to allow proper fueling and maintain emissions within mandated levels. After it reaches operating temperature, the sensor will generate a voltage, inversely proportional to the amount of oxygen present in the exhaust gases. The control module uses the signal voltage from the fuel control heated oxygen sensors while in closed loop to adjust fuel injector pulse width. While in closed loop, the PCM can adjust fuel delivery to maintain an air/fuel ratio which allows the best combination of emission control and driveability. The fuel control heated oxygen sensors are also used to determine catalyst efficiency.

HO2S Heater

Heated oxygen sensors are used to minimize the amount of time required for closed loop fuel control to begin operation and to allow accurate catalyst monitoring. The oxygen sensor heater greatly decreases the amount of time required for fuel control sensors (Bank 1 HO2S 1 and Bank2 HO2S 1) to become active. Oxygen sensor heaters are required by catalyst monitor and sensor (Bank 1 HO2S 2 and Bank 2 HO2S 2) to maintain a sufficiently high temperature which allows accurate exhaust oxygen content readings further away from the engine.

Catalyst Monitor Heated Oxygen Sensors and Diagnostic Operation

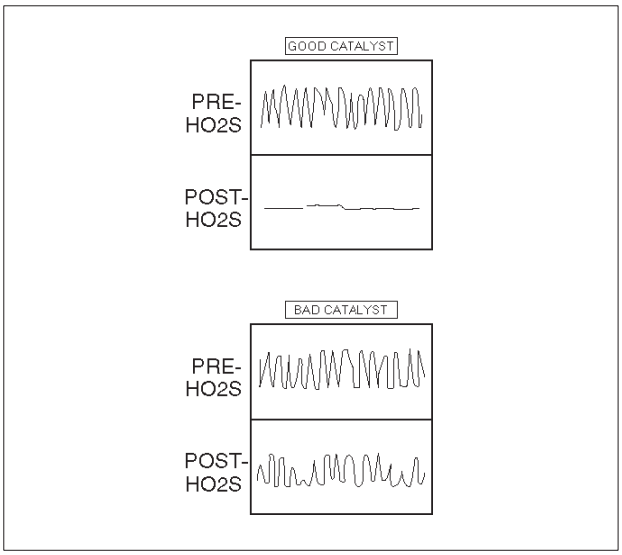

TS24067

To control emissions of hydrocarbons (HC), carbon monoxide (CO), and oxides of nitrogen (NOx), a three-way catalytic converter is used. The catalyst within the converter promotes a chemical reaction which oxidizes the HC and CO present in the exhaust gas, converting them into harmless water vapor and carbon dioxide. The catalyst also reduces NOx, converting it to nitrogen. The PCM has the ability to monitor this process using the pre-catalyst and post-catalyst heated oxygen sensors. The pre-catalyst sensor produces an output signal which indicates the amount of oxygen present in the exhaust gas entering the three-way catalytic converter. The post-catalyst sensor produces an output signal which indicates the oxygen storage capacity of the catalyst; this in turn indicates the catalyst's ability to convert exhaust gases efficiently. If the catalyst is operating efficiently, the pre-catalyst signal will be far more active than that produced by the post-catalyst sensor.

In addition to catalyst monitoring, the heated oxygen sensors have a limited role in controlling fuel delivery. If the sensor signal indicates a high or low oxygen content for an extended period of time while in closed loop, the PCM will adjust the fuel delivery slightly to compensate.

Downloaded from www.Manualslib.com manuals search engine

- For the 3.5L w/automatic transmission, the pre-catalyst sensor are designated Bank 1 HO2S 1 and Bank 2 HO2S 1. The post-catalyst sensors are Bank 1 HO2S 2 and Bank 2 HO2S 2.

Catalyst Monitor Outputs

The catalyst monitor diagnostic is sensitive to the following conditions:

- Exhaust leaks
- HO2S contamination
- Alternate fuels

Exhaust system leaks may cause the following:

- Preventing a degraded catalyst from failing the diagnostic.
- Causing a false failure for a normally functioning catalyst.
- Preventing the diagnostic from running.

Some of the contaminants that may be encountered are phosphorus, lead, silica, and sulfur. The presence of these contaminants will prevent the TWC diagnostic from functioning properly.

Three-Way Catalyst Oxygen Storage Capacity

The Three-Way catalyst (TWC) must be monitored for efficiency. To accomplish this, the control module monitors the pre-catalyst HO2S and post-catalyst HO2S oxygen sensors. When the TWC is operating properly, the post-catalyst oxygen sensor will have significantly less activity than the pre-catalyst oxygen sensor. The TWC stores and releases oxygen as needed during its normal reduction and oxidation process. The control module will calculate the oxygen storage capacity using the difference between the pre-catalyst and post catalyst oxygen sensor's voltage levels. If the activity of the post-catalyst oxygen sensor approaches that of the pre-catalyst oxygen sensor, the catalyst's efficiency is degraded.

Stepped or staged testing level allow the control module to statistically filter test information. This prevents falsely passing or falsely failing the oxygen storage capacity test. The calculations performed by the on-board diagnostic system are very complex. For this reason, post catalyst oxygen sensor activity should not be used to determine oxygen storage capacity unless directed by the service manual.

Two stages are used to monitor catalyst efficiency. Failure of the first stage will indicate that the catalyst requires further testing to determine catalyst efficiency. The seconds stage then looks at the inputs for the pre and post catalyst HO2S sensors more closely before determining if the catalyst is indeed degraded. This further statistical processing is done to increase the accuracy of oxygen storage capacity type monitoring. Failing the first (stage 1) test DOES NOT indicate a failed catalyst. The catalyst may be marginal or the fuel sulfur content could be very high.

Aftermarket HO2S characteristics may be different from the original equipment manufacturer sensor. This may lead to a false pass or a false fail of the catalyst monitor diagnostic. Similarly, if an aftermarket catalyst does not contain the same amount of cerium as the original part, the correlation between oxygen storage and conversion efficiency may be altered enough to set a false DTC.

Evaporative Emission (EVAP) Purge System Vacuum Switch

The EVAP system uses a switch located in the purge line between the canister and the purge valve to detect when purge is occurring. This switch senses the flow from the engine through the purge valve. When no purge is present, the switch is closed, applying a 12 volt signal to the control module as a NO PURGE signal. When canister purging occurs, the switch opens, interrupting the 12 volt signal to the control module. A Tech 2 display will indicate that purge is occurring.

Clogging of the canister fresh air vent could allow the purge hose between the switch and canister to trap vacuum with the purge valve closed. This would result in a diagnostic indication of a purge valve stuck open or a vacuum switch failure. Similarly, leaks or blockages in the purge hoses may result in misdiagnosis of the purge valve or vacuum switch.

When servicing a purge valve diagnostic trouble code, check the canister fresh air vent, vacuum switch and the integrity of all purge hoses prior to servicing the valve. (Refer to EVAP Vacuum Switch in On-Vehicle Service Procedures in this section.)

Misfire Monitor Diagnostic Operation

Misfire Monitor Diagnostic Operation

Misfire is monitored as a function of the combustion quality (CQ) signals generated from the ignition current sense system. Combustion signals represent the degree of combustion in each cylinder. Misfire is detected when the combustion signal is below a predetermined value.

The misfire ratio is calculated once every 100 engine cycles. For example, on a 6-cylinder engine, 600 ignition plug sparks occur every 100 cycles and if a misfire occurs 12 times during that time, the misfire is $12/600 \times 100 = 2$ %.

Misfire Counters

Whenever a cylinder misfires, the misfire diagnostic counts the misfire and notes the crankshaft position at the time the misfire occurred. These "misfire counters" are basically a file on each engine cylinder. A current and a history misfire counter are maintained for each cylinder. The misfire current counters (Misfire Cur #1-6) indicate the number of firing events out of the last 100 cylinder firing events which were misfires. The misfire current counter will display real time data without a misfire DTC stored. The misfire history counters (Misfire Hist #1-6) indicate the total number of cylinder firing events which were misfires. The misfire history counters will display 0 until the misfire diagnostic has failed and a DTC P0300 is set. Once the misfire DTC P0300 is set, the misfire

Downloaded from www.Manualslib.com manuals search engine

history counters will be updated every 100 cylinder firing events. A misfire counter is maintained for each cylinder. If the misfire diagnostic reports a failure, the diagnostic executive reviews all of the misfire counters before reporting DTC. This way, the diagnostic executive reports the most current information.

When crankshaft rotation is erratic, a misfire condition will be detected. Because of this erratic condition, the data that is collected by the diagnostic can sometimes incorrectly identify which cylinder is misfiring. Misfires are counted from more than one cylinder. Cylinder #1 has the majority of counted misfires. In this case, the Misfire Counters would identify cylinder #1 as the misfiring cylinder. The misfires in the other counters were just background noise caused by the erratic misfire rotation of the crankshaft. If the number of accumulated misfires is sufficient for the diagnostic to identify a true misfire, the diagnostic will set DTC P0300 – Misfire Detected.

Use diagnostic equipment to monitor misfire counter data on OBD II-compliant vehicles. Knowing which specific cylinder(s) misfired can lead to the root cause, even when dealing with a multiple cylinder misfire. Using the information in the misfire counters, identify which cylinders are misfiring. If the counter indicate cylinders numbers 1 and 4 misfired, look for a circuit or component common to both cylinders number 1 and 4.

Misfire counter information is located in the “Eng.” menu, “Misfire Data” sub-menu of the data list.

The misfire diagnostic may indicate a fault due to a temporary fault not necessarily caused by a vehicle emission system malfunction. Examples include the following items:

- Contaminated fuel
- Low fuel
- Fuel-fouled spark plugs
- Basic engine fault

Fuel Trim System Monitor Diagnostic Operation

Fuel Trim System Monitor Diagnostic Operation

This system monitors the averages of short-term and long-term fuel trim values. If these fuel trim values stay at their limits for a calibrated period of time, a malfunction is indicated. The fuel trim diagnostic compares the averages of short-term fuel trim values and long-term fuel trim values to rich and lean thresholds. If either value is within the thresholds, a pass is recorded. If both values are outside their thresholds, a rich or lean DTC will be recorded.

The fuel trim system diagnostic also conducts an intrusive test. This test determines if a rich condition is being caused by excessive fuel vapor from the EVAP canister. In order to meet OBD II requirements, the control module uses weighted fuel trim cells to determine the need to set a fuel trim DTC. A fuel trim DTC can only be set if fuel trim counts in the weighted fuel trim cells exceed specifications. This means that the vehicle could have a fuel trim problem which is causing a problem under certain conditions (i.e., engine idle high due to a small vacuum leak or rough idle due to a large vacuum leak) while it operates fine at other times. No fuel trim DTC would set (although an engine idle speed DTC or HO2S DTC may set). Use the Tech 2 to observe fuel trim counts while the problem is occurring.

A fuel trim DTC may be triggered by a number of vehicle faults. Make use of all information available (other DTCs stored, rich or lean condition, etc.) when diagnosing a fuel trim fault.

Fuel Trim Cell Diagnostic Weights

No fuel trim DTC will set regardless of the fuel trim counts in cell 0 unless the fuel trim counts in the weighted cells are also outside specifications. This means that the vehicle could have a fuel trim problem which is causing a problem under certain conditions (i.e. engine idle high due to a small vacuum leak or rough due to a large vacuum leak) while it operates fine at other times. No fuel trim DTC would set (although an engine idle speed DTC or HO2S DTC may set). Use the Tech 2 to observe fuel trim counts while the problem is occurring.

Downloaded from www.Manualslib.com manuals search engine

On-Board Diagnostic (OBD II) System Check

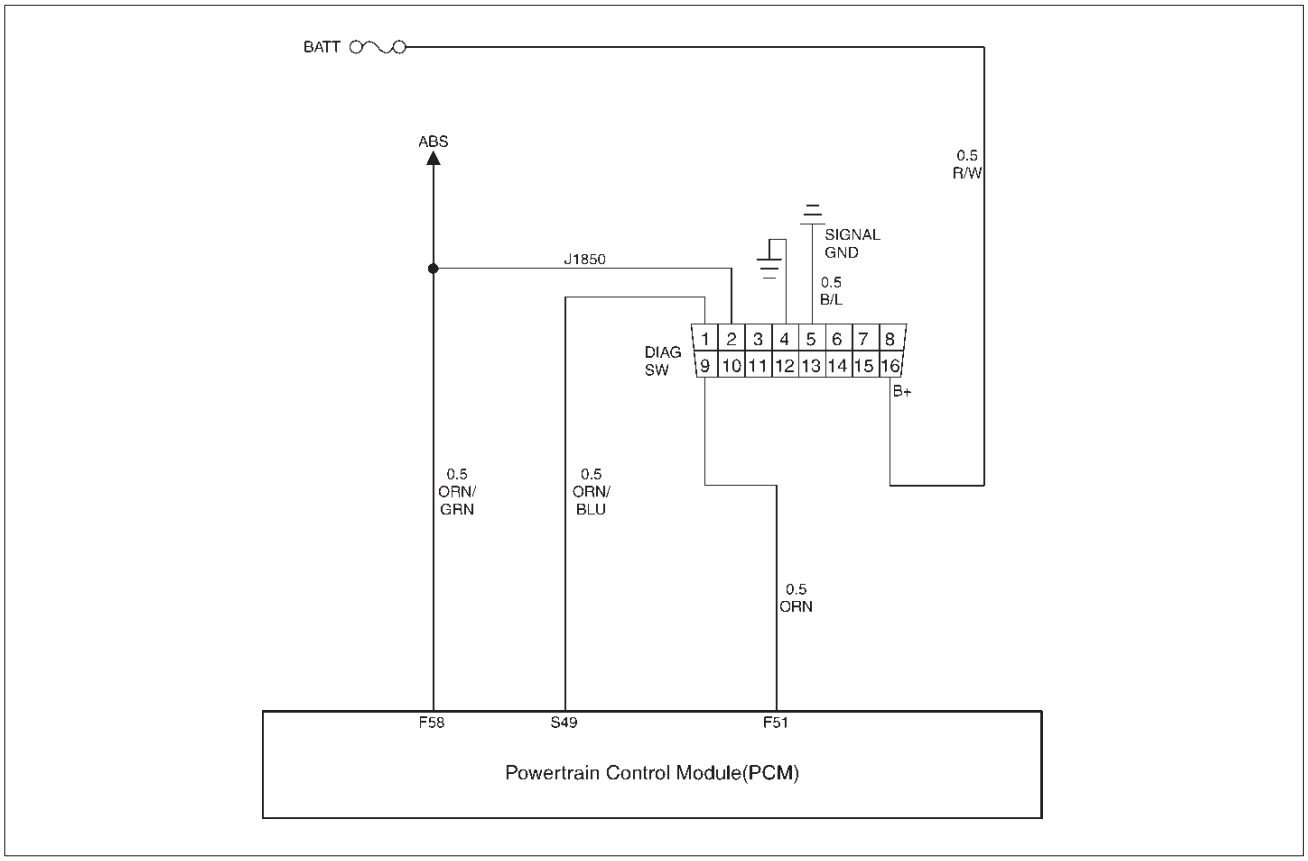

D06RY00053

Circuit Description

The on-board diagnostic system check is the starting point for any driveability complaint diagnosis. Before using this procedure, perform a careful visual/physical check of the PCM and engine grounds for cleanliness and tightness.

The on-board diagnostic system check is an organized approach to identifying a problem created by an electronic engine control system malfunction.

Diagnostic Aids

An intermittent may be caused by a poor connection, rubbed–through wire insulation or a wire broken inside the insulation. Check for poor connections or a damaged harness. Inspect the PCM harness and connector for improper mating, broken locks, improperly formed or damaged terminals, poor terminal-to-wire connection, and damaged harness.

Test Description

Number(s) below refer to the step number(s) on the Diagnostic Chart:

1. The MIL (“Check Engine lamp”) should be “ON” steady with the ignition “ON ”engine “OFF.”If not, the “No MIL”chart should be used to isolate the malfunction.
2. The RPL (“Reduced Power lamp”) should be “ON” steady with the ignition “ON ”engine “OFF.”If not, the “No RPL”chart should be used to isolate the malfunction.
3. Checks the Class 2 data circuit and ensures that the PCM is able to transmit serial data.
4. This test ensures that the PCM is capable of controlling the MIL (“Check Engine lamp”) and the MIL (“Check Engine lamp”) driver circuit is not shorted to ground.
5. This test ensures that the PCM is capable of controlling the RPL (“Reduced Powere lamp”) and the RPL (“Reduced Powere lamp”) driver circuit is not shorted to ground.
7. Check the DTCs (System ,Volts Supply circuit).
8. Check the DTCs (PCM{Software} detect Errors).
10. If the engine will not start, the Cranks But Will Not Run chart should be used to diagnose the condition.
13. A Tech 2 parameter which is not within the typical range may help to isolate the area which is causing the problem.
14. This vehicle is equipped with a PCM which utilizes an electrically erasable programmable read only memory (EEPROM). When the PCM is replaced, the new PCM must be programmed. Refer to *PCM Replacement and Programming Procedures in Powertrain Control Module (PCM) and Sensors* of this section.

Downloaded from www.Manualslib.com manuals search engine

On-Board Diagnostic (OBD II) System Check

Step	Action	Value(s)	Yes	No
1	1. Ignition “ON,”engine “OFF.” 2. Observe the malfunction indicator lamp (MIL or “Check Engine lamp”). Is the MIL (“Check Engine lamp”)“ON?”	—	Go to *Step 2*	Go to *No MIL(“Check Engine lamp”)*
2	1. Ignition “ON,”engine “OFF.” 2. Observe the malfunction indicator lamp (“Reduced Power lamp”). Is the MIL (“Reduced Power lamp”) “ON?”	—	Go to *Step 3*	Go to *No RPL(“Reduce d Power lamp”)*
3	1. Ignition “OFF.” 2. Install Tech 2. 3. Ignition “ON.” 4. Attempt to display PCM engine data with the Tech 2. Does the Tech 2 display PCM data?	—	Go to *Step 4*	Go to *Step 12*
4	1. Using the Tech 2 output tests function, select MIL (“Check Engine lamp”) control and command the MIL (“Check Enginelamp”) “OFF.” 2. Observe the MIL (“Check Engine lamp”). Did the MIL (“Check Engine lamp”) turn “OFF?”	—	Go to *Step 5*	Go to *MIL(“Check Engine lamp”) On Steady*
5	1. Using the Tech 2 output tests function, select MIL (“Reduced Power lamp”) control and command the MIL (“Reduced Power lamp”) “OFF.” 2. Observe the MIL (“Reduced Power lampp”). Did the MIL (“Reduced Power lamp”) turn “OFF?”	—	Go to *Step 6*	Go to *RPL(“Reduce d Power lamp”)On Steady*
6	Select “Display DTCs” with the Tech 2. Are any DTCs stored?	—	Go to *Step 7*	Go to *Step 11*
7	Following below the DTCs stored: P0562,P0563,P0601,P0602,P0604,P0606,P1625,P1635,P1639,P1640, 1650	—	Go to *applicable DTC table*	Go to *Step 8*
8	Following below the DTCs stored: P1514, P1515, P1516, P1523, P1125, P1290, P1295, P1299	—	Go to *applicable DTC table*	Go to *Step 9*
9	Following below the DTCs stored: 1. P0425, P0106, P0107, P1107, P0401, P1404, P0405, P1120, P1221, P1515, P1516, P1275, P1635, P1271, P1273, P1285, P1272 2. P0336,P0337,P0341,P0342,P1220,P1515,P1221, P1516,P1280,P1639,P1271,P1272	—	Go to *“Multiple PCM Information sensor DTCs Set”*	Go to *Step 10*
10	Attempt to start the engine. Did the engine start and continue to run?	—	Go to *Step 6*	Go to *Cranks But Will Not Run*

Downloaded from www.Manualslib.com manuals search engine

On-Board Diagnostic (OBD II) System Check (Cont'd)

Step	Action	Value(s)	Yes	No
11	Compare PCM data values displayed on the Tech 2 to the typical engine scan data values. Are the displayed values normal or close to the typical values?	—	Go to *Symptom*	Refer to *indicated Component System Checks*
12	1. Ignition "OFF," disconnect the PCM. 2. Ignition "ON," engine "OFF." 3. Check the Class 2 data circuit for an open, short to ground, or short to voltage. Also, check the DLC ignition feed circuit for an open or short to ground and the DLC ground circuit for an open. 4. If a problem is found, repair as necessary. Was a problem found?	—	Go to *Step 2*	Go to *Step 13*
13	1. Attempt to reprogram the PCM. Refer to *Powertrain Control Module (PCM) in On-Vehicle Service.* 2. Attempt to display PCM data with the Tech 2. Does the Tech 2 display PCM engine data?	—	Go to *Step 2*	Go to *Step 14*
14	Replace the PCM. **IMPORTANT:** The replacement PCM must be programmed. Refer to *ON-Vehicle Service in Power Control Module and Sensors for procedures.* And also refer to latest Service Bulletin. Check to see if the latest software is released or not. And then Down Load the LATEST PROGRMMED SOFTWARE to the replasement PCM. Is the action complete?	—	Go to *Step 2*	—

Downloaded from www.Manualslib.com manuals search engine

A/C Clutch Control Circuit Diagnosis

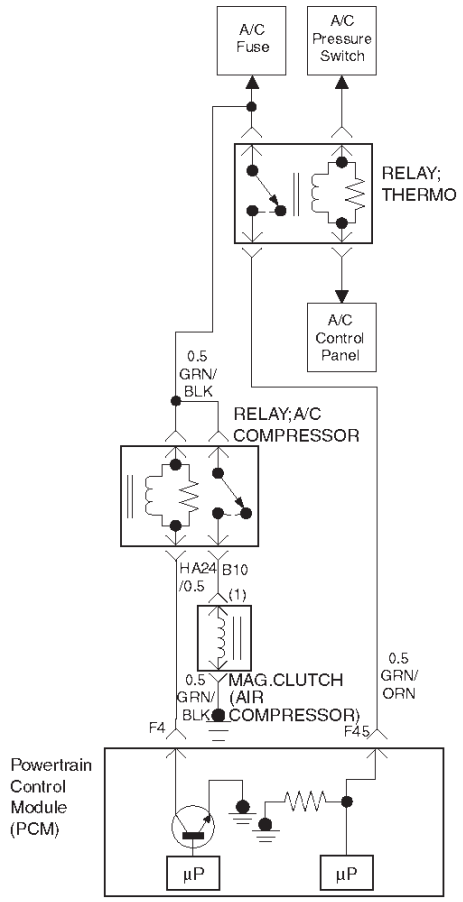

D06RY00159

Circuit Description

When air conditioning and blower fan are selected, and if the system has a sufficient refrigerant charge, a 12-volt signal is supplied to the A/C request input of the powertrain control module (PCM). The A/C request signal may be temporarily canceled during system operation by the electronic thermostat in the evaporator case. When the A/C request signal is received by the PCM, the PCM supplies a ground from the compressor clutch relay if the engine operating conditions are within acceptable ranges. With the A/C compressor relay energized, voltage is supplied to the compressor clutch coil.

The PCM will enable the compressor clutch to engage whenever A/C has been selected with the engine running, unless any of the following conditions are present:

- The throttle is greater than 90%.
- The ignition voltage is below 10.5 volts.
- The engine speed is greater than 4500 RPM for 5 seconds or 5400 RPM.
- The engine coolant temperature (ECT) is greater than 125 °C (257 °F).
- The intake air temperature (IAT) is less than 5°C (41°F).
- The power steering pressure switch signals a high pressure condition.

Diagnostic Aids

To diagnose an the intermittent fault, check for following conditions:

- Poor connection at the PCM–Inspect connections for backed-out terminals, improper mating, broken locks, improperly formed or damaged terminals, and poor terminal-to-wire connection.
- Damaged harness–Inspect the wiring harness for damage. If the harness appears to OK, observe the A/C clutch while moving connectors and wiring harnesses related to the A/C. A sudden clutch malfunction will indicate the source of the intermittent fault.

Downloaded from www.Manualslib.com manuals search engine

A/C Clutch Diagnosis

This chart should be used for diagnosing the electrical portion of the A/C compressor clutch circuit. A Tech 2 will be used in diagnosing the system. The Tech 2 has the ability to read the A/C request input to the PCM. The Tech 2 can display when the PCM has commanded the A/C clutch "ON." The Tech 2 should have the ability to override the A/C request signal and energize the A/C compressor relay.

Test Description

IMPORTANT: Do not engage the A/C compressor clutch with the engine running if an A/C mode is not selected at the A/C control switch.

The numbers below refer to the step numbers on the Diagnostic Chart:

3. This a test determine is the problem is with the refrigerant system. If the switch is open, A/C pressure gauges will be used to determine if the pressure switch is faulty or if the system is partially discharged or empty.
4. Although the normal complaint will be the A/C clutch failing to engage, it is possible for a short circuit to cause the clutch to run when A/C has not been selected. This step is a test for that condition.
7. There is an extremely low probability that both relays will fail at the same time, so the substitution process is one way to check the A/C Thermostat relay. Use a known good relay to do a substitution check.

A/C Clutch Control Circuit Diagnosis

Step	Action	Value(s)	Yes	No
1	Was the "On-Board Diagnostic (OBD) System Check" performed?	—	Go to *Step 2*	Go to *OBD System Check*
2	Are any other DTCs stored?	—	Go to the other DTC chart(s) first	Go to *Step 3*
3	1. Disconnect the electrical connector at the pressure switch located on the receiver/drier. 2. Use an ohmmeter to check continuity across the pressure switch. Is the pressure switch open?	—	Go to Air *Conditioning* to diagnose the cause of the open pressure switch	Go to *Step 4*
4	**IMPORTANT:** Before continuing with the diagnosis, the following conditions must be met: ● The intake air temperature must be greater than 15˚C. (60˚F). ● The engine coolant temperature must be less than 119˚C (246˚F). 1. A/C "OFF." 2. Start the engine and idle for 1 minute. 3. Observe the A/C compressor. Is the A/C compressor clutch engaged even though A/C has not been requested?	—	Go to *Step 37*	Go to *Step 5*
5	1. Idle the engine. 2. A/C "ON". 3. Blower "ON". 4. Observe the A/C compressor. Is the A/C compressor magnetic clutch engaged?	—	Refer to *Diagnostic Aids*	Go to *Step 6*
6	1. Engine idling. 2. A/C "ON". 3. Blower "ON". 4. Observe the "A/C Request" display on the Tech 2. (Refer to the Miscellaneous test) Does the tool "A/C Request" display indicate "Yes?"	—	Go to *Step 26*	Go to *Step 7*

Downloaded from www.Manualslib.com manuals search engine

A/C Clutch Control Circuit Diagnosis (Cont'd)

Step	Action	Value(s)	Yes	No
7	Temporarily substitute the A/C compressor relay in place of the A/C thermostat relay, then repeat Step 5. Did the "A/C Request" display indicate "Yes?"	—	Go to *Step 8*	Go to *Step 9*
8	Replace the original A/C thermostat relay. Is the action complete?	—	Verify repair	—
9	Dose the blower operate?	—	Go to *Step 10*	Go to *Step 11*
10	Repair the blower. Is the action complete?	—	Verify repair	—
11	Check for a faulty 10A A/C fuse in the underdash fuse panel. Was the 10A fuse OK?	—	Go to *Step 13*	Go to *Step 12*
12	Check for short circuit and make repairs if necessary. Replace the 10A A/C fuse. Is the action complete?	—	Verify repair	—
13	1. Remove the glove box to gain access to the A/C thermostat. 2. Disconnect the thermostat connector. 3. Attach a fused jumper between ground and the PNK/GRN wire at the thermostat. 4. A/C "ON." 5. Blower "ON." Dose A/C request indicate "YES" on the Tech 2?	—	Go to *Step 14*	Go to *Step 17*
14	1. Ignition "ON." 2. Use a DVM to check voltage at the electronic A/C thermostat. Was voltage equal to the specified value?	B+	Go to *Step 17*	Go to *Step 15*
15	Check for an open (LT GRN) between the thermostat and the A/C switch. Was the wire open?	—	Go to *Step 16*	Go to *Step 17*
16	Repair the open wire (LT GRN) between the thermostat and the A/C switch. Is the action complete?	—	Verify repair	—
17	Check for an open circuit between A/C thermostat relay and PCM A/C request terminal (F45). Was there an open circuit?	—	Go to *Step 18*	Go to *Step 19*
18	Repair the open circuit between the PCM and A/C thermostat relay. Is the action complete?	—	Verify repair	—
19	1. Ignition "ON." 2. Use a DVM to check voltage at the A/C pressure switch (BRN). Was voltage equal to the specified value?	B+	Go to *Step 21*	Go to *Step 20*
20	Repair the open circuit between the 10A A/C fuse and the pressure switch. Is the action complete?	—	Verify repair	—

Downloaded from www.Manualslib.com manuals search engine

A/C Clutch Control Circuit Diagnosis (Cont'd)

Step	Action	Value(s)	Yes	No
21	Use an ohmmeter to check continuity between the pressure switch (GRN/WHT) and the A/C thermostat relay (GRN/WHT). Was the circuit open?	—	Go to *Step 22*	Go to *Step 23*
22	Repair the open circuit between the pressure switch and the A/C thermostat relay. Is the action complete?	—	Verify repair	—
23	Check for damaged pin or terminal at F45 of the PCM. Was a damaged pin or terminal found?	—	Go to *Step 24*	Go to *Step 25*
24	Repair the damaged pin or terminal. Is the action complete?	—	Verify repair	—
25	Replace the PCM. **IMPORTANT:** The replacement PCM must be programmed. Refer to *On-Vehicle Service* in *Powertrain Control Module Sensors for procedures.* And also refer to latest Service Bulletin. Check to see if the Latest software is released or not. And then Down Load the LATEST PROGRAMMED SOFTWARE to the replacement PCM. Is the action complete?	—	Verify repair	—
26	1. Remove the A/C compressor relay. 2. Ignition "ON." 3. Use a DVM to check voltage at both of the BRN wires at the A/C compressor relay socket. Is the voltage equal to the specified value?	B+	Go to *Step 28*	Go to *Step 27*
27	Repair the faulty BRN wire between the A/C fuse and the A/C compressor relay . Is the action complete?	—	Verify repair	—
28	1. A/C compressor relay removed. 2. Engine idling. 3. A/C "ON." 4. Blower "ON." 5. Use a DVM to measure voltage between the GRN/BLK wire at the A/C compressor relay socket and battery±. Did the DVM indicate the specified value?	B+	Go to *Step 32*	Go to *Step 29*
29	Check for an open GRN/BLK wire between PCM terminal F4 and the A/C compressor relay. Was the wire open?	—	Go to *Step 30*	Go to *Step 31*
30	Repair the open GRN/BLK wire between the PCM and the A/C compressor relay. Is the action complete?	—	Verify repair	—
31	Check for a damaged pin or terminal at F4 of the PCM. Was a damaged pin or a terminal found?	—	Go to *Step 24*	Go to *Step 25*

Downloaded from www.Manualslib.com manuals search engine

A/C Clutch Control Circuit Diagnosis (Cont'd)

Step	Action	Value(s)	Yes	No
32	1. A/C compressor relay removed. 2. Connect a fused jumper at the A/C compressor relay socket between either BRN wire and the BRN/YEL wire. 3. Engine idling. 4. A/C "ON." 5. Blower "ON." Did the compressor magnetic clutch engage?	—	Go to *Step 33*	Go to *Step 34*
33	Repair the A/C compressor relay. Is the action complete?	—	Verify repair	—
34	Check for an open circuit between the A/C compressor relay and the A/C clutch. Was an open circuit found?	—	Go to *Step 35*	Go to *Step 36*
35	Repair the open circuit between the compressor Clutch and the A/C compressor relay. Is the action complete?	—	Verify repair	—
36	Service the compressor clutch or replace the compressor due to a faulty internal overheat switch. Is the action complete?	—	Verify repair	—
37	1. Remove the A/C compressor relay. 2. Idle the engine. Is the compressor clutch still engaged when A/C is not selected?	—	Go to *Step 38*	Go to *Step 39*
38	Repair the short to voltage between the A/C clutch and A/C compressor relay. Is the action complete?	—	Verify repair	—
39	1. Reinstall the A/C compressor relay. 2. Remove the A/C thermostat relay. 3. Engine idling. Is the compressor clutch still engaged when A/C is not selected?	—	Go to *Step 40*	Go to *Step 42*
40	Use a DVM to check for a short to ground between the A/C compressor relay and F4 of the PCM. Was a short detected?	—	Go to *Step 41*	Go to *Step 25*
41	Repair the short to ground between the PCM and A/C compressor relay. Is the action complete?	—	Verify repair	—
42	Repair the short to ground between the A/C thermostat relay and the electronic thermostat. Is the action complete?	—	Verify repair	—

Downloaded from www.Manualslib.com manuals search engine

Electronic Ignition System Diagnosis

If the engine cranks but will not run or immediately stalls, the Engine Cranks But Will Not Start chart must be used to determine if the failure is the ignition system or the fuel system. If DTC P0300 through P306, P0341, or P0336 is set, the appropriate diagnostic trouble code chart must be used for diagnosis.
If a misfire is being experienced with no DTC set, refer to the *Symptoms* section for diagnosis.

EVAP Canister Purge Solenoid and EVAP Vacuum Switch

A continuous purge condition with no purge commanded by the PCM will set a DTC P1441. Refer to the DTC charts for further information.

Visual Check of The Evaporative Emission Canister

- If the canister is cracked or damaged, replace the canister.
- If fuel is leaking from the canister, replace the canister and check hoses and hose routing.

Fuel Metering System Check

Some failures of the fuel metering system will result in an "Engine Cranks But Will Not Run" symptom. If this condition exists, refer to the *Cranks But Will Not Run* chart. This chart will determine if the problem is caused by the ignition system, the PCM, or the fuel pump electrical circuit.
Refer to *Fuel System Electrical Test* for the fuel system wiring schematic.
If there is a fuel delivery problem, refer to *Fuel System Diagnosis*, which diagnoses the fuel injectors, the fuel pressure regulator, and the fuel pump. If a malfunction occurs in the fuel metering system, it usually results in either a rich HO2S signal or a lean HO2S signal. This condition is indicated by the HO2S voltage, which causes the PCM to change the fuel calculation (fuel injector pulse width) based on the HO2S reading. Changes made to the fuel calculation will be indicated by a change in the long term fuel trim values which can be monitored with a Tech 2. Ideal long term fuel trim values are around 0%; for a lean HO2S signal, the PCM will add fuel, resulting in a fuel trim value above 0%. Some variations in fuel trim values are normal because all engines are not exactly the same. If the evaporative emission canister purge is "ON," the fuel trim may be as low as –38%. If the fuel trim values are greater than +23%, refer to *DTC P0131, DTC P0151, DTC P0171, and DTC 1171* for items which can cause a lean HO2S signal.

Fuel System Pressure Test

A fuel system pressure test is part of several of the diagnostic charts and symptom checks. To perform this test, refer to *Fuel Systems Diagnosis.*

Fuel Injector Coil Test Procedure and Fuel Injector Balance Test Procedure

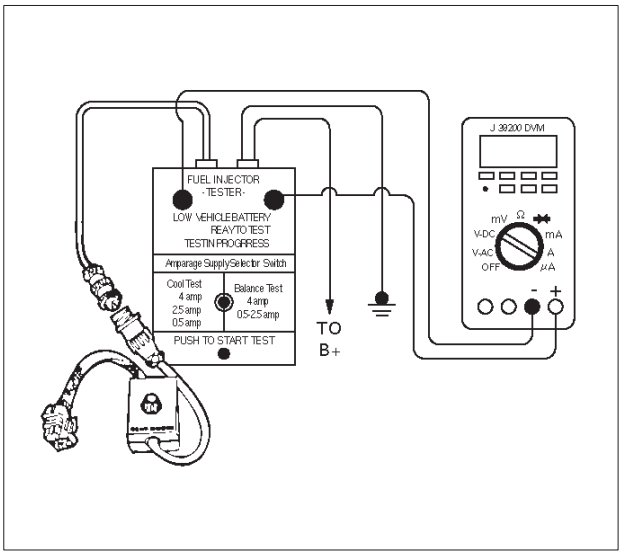

T32003

Test Description

Number(s) below refer to the step number(s) on the Diagnostic Chart:

2. Relieve the fuel pressure by connecting the J 34730-1 Fuel Pressure Gauge to the fuel pressure connection on the fuel rail.

CAUTION: In order to reduce the risk of fire and personal injury, wrap a shop towel around the fuel pressure connection. The towel will absorb any fuel leakage that occurs during the connection of the fuel pressure gauge. Place the towel in an approved container when the connection of the fuel pressure gauge is complete.

Place the fuel pressure gauge bleed hose in an approved gasoline container.

With the ignition switch "OFF," open the valve on the fuel pressure gauge.

3. Record the lowest voltage displayed by the DVM after the first second of the test. (During the first second, voltage displayed by the DVM may be inaccurate due to the initial current surge.)

Injector Specifications:

Resistance Ohms	Voltage Specification at 10˚C-35˚C (50˚F-95˚F)
11.8 – 12.6	5.7 – 6.6

- The voltage displayed by the DVM should be within the specified range.
- The voltage displayed by the DVM may increase throughout the test as the fuel injector windings warm and the resistance of the fuel injector windings changes.

Downloaded from www.Manualslib.com manuals search engine

- An erratic voltage reading (large fluctuations in voltage that do not stabilize) indicates an intermittent connection within the fuel injector.

5. Injector Specifications:

Highest Acceptable Voltage Reading Above/Below 35˚C/10˚C (95˚F/50˚F)	Acceptable Subtracted Value
9.5 Volts	0.6 Volts

7. The Fuel Injector Balance Test portion of this chart (Step 7 through Step 11) checks the mechanical (fuel delivery) portion of the fuel injector. An engine cool-down period of 10 minutes is necessary in order to avoid irregular fuel pressure readings due to “Hot Soak” fuel boiling.

Injector Coil Test Procedure (Steps 1-6) and Injector Balance Test Procedure (Steps 7-11)

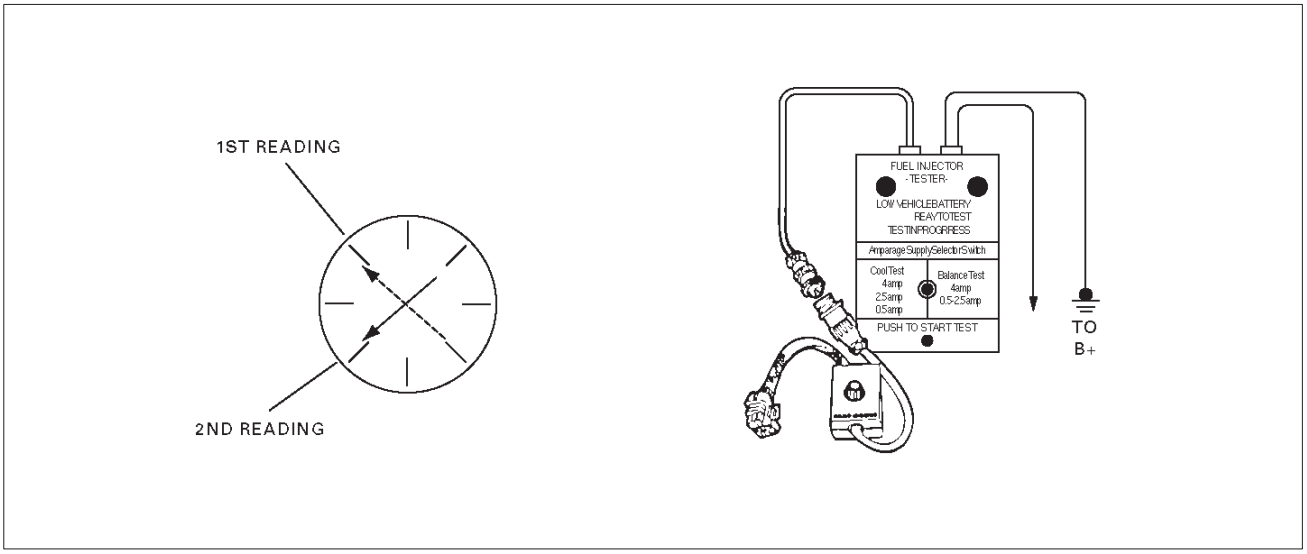

R262001

CYLINDER	1	2	3	4	5	6
1st Reading (1)	296 kPa (43 psi)	296 kPa (43 psi)	296 kPa (43 psi)	296 kPa (43 psi)	296 kPa (43 psi)	296 kPa (43 psi)
2nd Reading (2)	131 kPa (19 psi)	117 kPa (17 psi)	124 kPa (18 psi)	145 kPa (21 psi)	131 kPa (19 psi)	130 kPa (19 psi)
Amount of Drop (1st Reading–2nd Reading)	165 kPa (24 psi)	179 kPa (26 psi)	172 kPa (25 psi)	151 kPa (22 psi)	165 kPa (24 psi)	166 kPa (24 psi)
Av.drop = 166 kPa/24 psi ± 10 kPa/1.5 psi = 156 – 176 kPa or 22.5 – 25.5 psi	OK	Faulty, Rich (Too Much Fuel Drop)	OK	Faulty, Lean (Too Little Fuel Drop)	OK	OK

NOTE: These figures are examples only.

Downloaded from www.Manualslib.com manuals search engine

Injector Coil Test Procedure (Steps 1-6) and Injector Balance Test Procedure (Steps 7-11)

Step	Action	Value(s)	Yes	No
1	Was the "On-Board Diagnostic (OBD) System Check" performed?	—	Go to Step 2	Go to *OBD System Check*
2	1. Turn the engine "OFF." NOTE: In order to prevent flooding of a single cylinder and possible engine damage, relieve the fuel pressure before performing the fuel injector coil test procedure. 2. Relieve the fuel pressure. Refer to *Test Description Number 2.* 3. Connect the J 39021-5V Fuel Injector Tester to B+ and ground, and to the J 39021-90 Injector Switch Box. 4. Connect the injector switch box to the grey fuel injector harness connector located on the front of the EVAP canister bracket. 5. Set the amperage supply selector switch on the fuel injector tester to the "Coil Test" 0.5 amp position. 6. Connect the leads from the J 39200 Digital Voltmeter (DVM) to the injector tester. Refer to the illustrations associated with the test description. 7. Set the DVM to the tenths scale (0.0). 8. Observe the engine coolant temperature. Is the engine coolant temperature within the specified values?	10˚C (50˚F) to 35˚C (95˚F)	Go to *Step 3*	Go to *Step 5*
3	1. Set injector switch box injector #1. 2. Press the "Push to Start Test" button on the fuel injector tester. 3. Observe the voltage reading on the DVM. **IMPORTANT:** The voltage reading may rise during the test. 4. Record the lowest voltage observed after the first second of the test. 5. Set the injector switch box to the next injector and repeat steps 2, 3, and 4. Did any fuel injector have an erratic voltage reading (large fluctuations in voltage that did not stabilize) or a voltage reading outside of the specified values?	5.7-6.6 V	Go to *Step 4*	Go to *Step 7*
4	Replace the faulty fuel injector(s). Refer to *Fuel Injector.* Is the action complete?	—	Go to *Step 7*	—

Downloaded from www.Manualslib.com manuals search engine

Injector Coil Test Procedure (Steps 1-6) and Injector Balance Test Procedure (Steps 7-11) (Cont'd)

Step	Action	Value(s)	Yes	No
5	1. Set injector switch box injector #1. 2. Press the "Push to Start Test" button on the fuel injector tester. 3. Observe the voltage reading on the DVM. **IMPORTANT:** The voltage reading may rise during the test. 4. Record the lowest voltage observed after the first second of the test. 5. Set the injector switch box to the next injector and repeat steps 2, 3, and 4. Did any fuel injector have an erratic voltage reading (large fluctuations in voltage that did not stabilize) or a voltage reading above the specified value?	9.5 V	Go to *Step 4*	Go to *Step 6*
6	1. Identify the highest voltage reading recorded (other than those above 9.5 V). 2. Subtract the voltage reading of each injector from the highest voltage selected in step 1. Repeat until you have a subtracted value for each injector. For any injector, is the subtracted Value in step 2 greater than the specified value?	0.6 V	Go to *Step 4*	Go to *Step 7*
7	**CAUTION: In order to reduce the risk of fire and personal injury, wrap a shop towel around the fuel pressure connection. The towel will absorb any fuel leakage that occurs during the connection of the fuel pressure gauge. Place the towel in an approved container when the connection of the fuel pressure gauge is complete.** 1. Connect the J 34730-1 Fuel Pressure Gauge to the fuel pressure test port. 2. Energize the fuel pump using the Tech 2. 3. Place the bleed hose of the fuel pressure gauge into an approved gasoline container. 4. Bleed the air out of the fuel pressure gauge. 5. With the fuel pump running, observe the reading on the fuel pressure gauge. Is the fuel pressure within the specified values?	296-376 kPa (43-55 psi)	Go to *Step 8*	Go to *Fuel System Diagnosis*
8	Turn the fuel pump "OFF." Does the fuel pressure remain constant?	—	Go to *Step 9*	Go to *Fuel System Diagnosis*

Downloaded from www.Manualslib.com manuals search engine

Injector Coil Test Procedure (Steps 1-6) and Injector Balance Test Procedure (Steps 7-11) (Cont'd)

Step	Action	Value(s)	Yes	No
9	1. Connect the J 39021-5V Fuel Injector Tester and J 39021-90 Injector Switch Box the fuel injector harness connector. 2. Set the amperage supply selector switch on the fuel injector tester to the "Balance Test" 0.5–2.5 amp position. 3. Using the Tech 2 turn the fuel pump "ON" then "OFF" in order to pressurize the fuel system. 4. Record the fuel pressure indicated by the fuel pressure gauge after the fuel pressure stabilizes. This is the first pressure reading. 5. Energize the fuel injector by depressing the "Push to Start Test" button on the fuel injector tester. 6. Record the fuel pressure indicated by the fuel pressure gauge after the fuel pressure gauge needle has stopped moving. This is the second pressure reading. 7. Repeat steps 1 through 6 for each fuel injector. 8. Subtract the second pressure reading from the first pressure reading for one fuel injector. The result is the pressure drop value. 9. Obtain a pressure drop value for each fuel injector. 10. Add all of the individual pressure drop values. This is the total pressure drop. 11. Divide the total pressure drop by the number of fuel injectors. This is the average pressure drop. Does any fuel injector have a pressure drop value that is either higher than the average pressure drop or lower than the average pressure drop by the specified value?	10 kPa (1.5 psi)	Go to *Step 10*	Go to *OBD System Check*
10	Re-test any fuel injector that does not meet the specification. Refer to the procedure in step 9. NOTE: Do not repeat any portion of this test before running the engine in order to prevent the engine from flooding. Does any fuel injector still have a pressure drop value that is either higher than the average pressure drop or lower than the average pressure drop by the specified value?	10 kPa (1.5 psi)	Go to *Step 11*	Go to *Symptoms*
11	Replace the faulty fuel injector(s). Refer to *Fuel Injector.* Is the action complete?	—	Verify repair	—

Downloaded from www.Manualslib.com manuals search engine

Powertrain Control Module (PCM) Diagnosis

To read and clear diagnostic trouble codes, use a Tech 2.

IMPORTANT: Use of a Tech 2 is recommended to clear diagnostic trouble codes from the PCM memory. Diagnostic trouble codes can also be cleared by turning the ignition "OFF" and disconnecting the battery power from the PCM for 30 seconds. Turning off the ignition and disconnecting the battery power from the PCM will cause all diagnostic information in the PCM memory to be cleared. Therefore, all the diagnostic tests will have to be re-run.

Since the PCM can have a failure which may affect only one circuit, following the diagnostic procedures in this section will determine which circuit has a problem and where it is.

If a diagnostic chart indicates that the PCM connections or the PCM is the cause of a problem, and the PCM is replaced, but this does not correct the problem, one of the following may be the reason:

- There is a problem with the PCM terminal connections. The terminals may have to be removed from the connector in order to check them properly.
- EEPROM program is not correct for the application. Incorrect components or reprogramming the PCM with the wrong EEPROM program may cause a malfunction and may or may not set a DTC.
- The problem is intermittent. This means that the problem is not present at the time the system is being checked. In this case, refer to the *Symptoms* portion of the manual and make a careful physical inspection of all component and wiring associated with the affected system.
- There is a shorted solenoid, relay coil, or harness. Solenoids and relays are turned "ON" and "OFF" by the PCM using internal electronic switches called drivers. A shorted solenoid, relay coil, or harness will not damage the PCM but will cause the solenoid or relay to be inoperative.

Multiple PCM Information Sensor DTCs Set

Circuit Description

The powertrain control module (PCM) monitors various sensors to determine the engine operating conditions.

The PCM controls fuel delivery, spark advance, transmission operation, and emission control device operation based on the sensor inputs.

The PCM provides a sensor ground to all of the sensors.

The PCM applies 5 volts through a pull–up resistor, and determines the status of the following sensors by monitoring the voltage present between the 5–volt supply and the resistor:

- The engine coolant temperature (ECT) sensor
- The intake air temperature (IAT) sensor
- The transmission fluid temperature (TFT) sensor

The PCM provides the following sensors with a 5–volt reference and a sensor ground signal:

1

- The exhaust gas recirculating (EGR) pintle position
- sensor
- The manifold absolute pressure (MAP) sensor
- The throttle position (TP) sensor 1
- The acceleration position (AP) sensor 1
- The acceleration position (AP) sensor 3
- The Vapor Pressure Sensor

2

- The Crank position (CKP) sensor
- The Camshaft Position (CMP) Sensor
- The throttle position (TP) sensor 2
- The acceleration position (AP) sensor 2

The PCM monitors the separate feedback signals from these sensors in order to determine their operating status.

Diagnostic Aids

IMPORTANT: Be sure to inspect PCM and engine grounds for being secure and clean.

A short to voltage in one of the sensor input circuits may cause one or more of the following DTCs to be set:

- P0425
- P0108, P1106
- P0406
- P1120, P1515, P1221, P1516, P1635
- P1275, P1639, P1271, P1273
- P1285, P1272, P1273
- P0336, P0337
- P0341, P0342
- P1220, P1515, P1221, P1515, P1516
- P1280, P1271, P1272

IMPORTANT: If a sensor input circuit has been shorted to voltage, ensure that the sensor is not damaged. A damaged sensor will continue to indicate a high or low voltage after the affected circuit has been repaired. If the sensor has been damaged, replace it.

An open in the sensor ground circuit between the PCM and the splice will cause one or more of the following DTCs to be set:

- P0425
- P0108,P1106
- P0406
- P1120, P1515, P1221, P1516, P1635
- P1275, P1639, P1271, P1273
- P1285, P1272, P1273
- P0336, P0337
- P0341, P0342
- P1220, P1515, P1221, P1515, P1516
- P1280, P1271, P1272

A short to ground in the 5–volt reference A or B circuit will cause one or more of the following DTCs to be set:

Downloaded from www.Manualslib.com manuals search engine

- P0453
- P0106, P0107, P1107
- P0401, P1404, P0405
- P1120, P1515, P1221, P1516, P1635
- P1275, P1639, P1271, P1273
- P1285, P1646, P1272, P1273
- P0336, P0337
- P0341, P0342
- P1220, P1515, P1221, P1515, P1516
- P1280, P1271, P1272

Check for the following conditions:

- **Poor connection at PCM.** Inspect the harness connectors for backed–out terminals, improper mating, broken locks, improperly formed or damage terminals, and a poor terminal–to–wire connection.
- **Damaged harness.** Inspect the wiring harness for damage. If the harness is not damaged, observe an affected sensor fs displayed value on the Tech 2 with the ignition “ON” and the engine “OFF” while you move the connectors and the wiring harnesses related to the following sensors:
  - Vapor Pressure Sensor
  - MAP Sensor
  - EGR
  - TPS1/TPS2
  - APS1/APS2/APS3
  - CKP/CMP

Downloaded from www.Manualslib.com manuals search engine

Multiple PCM Information Sensor DTCs Set

Step	Action	Value(s)	Yes	No
1	Was the "On-Board (OBD) System Check" performed?	—	Go to *Step 2*	Go to *OBD System Check*
2	1. Turn the ignition "OFF," disconnect the PCM. 2. Turn the ignition "ON," check the 5 volt reference 1 and 2 circuit for the following conditions: ● A poor connection at the PCM. ● An open between the PCM connector and the splice. ● A short to ground. ● A short to voltage. Is there an open or short?	—	Go to *Step 3*	Go to *Step 4*
3	Repair the open or short. Is the action complete?	—	Verify repair	—
4	Check the sensor ground circuit for the following conditions: ● A poor connection at the PCM or the affected sensors. ● An open between the PCM connector and the affected sensors. Is there an open or a poor connection?	—	Go to *Step 5*	Go to *Step 6*
5	Repair the open or the poor connection. Is the action complete?	—	Verify repair	—
6	Following below the DTCs stored: P1635, P1639, P1646	—	Go to *applicable DTC table*	Go to *Step 7*
7	Measure the resistance below the items: ● Between EGR sensor supply circuit and Vapor Pressure Sensor supply circuit. ● Between MAP sensor supply circuit and Vapor Pressure Sensor supply circuit. ● Between Vapor Pressure Sensor supply circuit and PCM harness connector. (5Volt supply circuit) Does the resistance measure near the specified value?	—	Go to *Step 9*	Go to *Step 8*
8	Locate and repair the open circuit in the MAP or EGR or Vapor Pressure sensor suppy circuit. Is the action complete?	—	Verify repair	—
9	1. Disconnect the MAP , Vapor pressure sensor and EGR connecter. 2. Ignition "ON." 3. Measure the resistance below the items: ● MAP sensor GND circuit. ● EGR GND circuit. ● Vapor pressure sensor GND circuit. Does the voltage resistance near the specified value?	—	Go to *Step 11*	Go to *Step 10*

Downloaded from www.Manualslib.com manuals search engine

Multiple PCM Information Sensor DTCs Set (Cont'd)

Step	Action	Value(s)	Yes	No
10	Locate and repair the short circuit in the MAP or EGR or Vapor Pressure sensor signal or GND circuit. Is the action complete?	—	Verify repair	—
11	Measure the resistance below the items: ● Between CKP sensor supply circuit and CMP Sensor supply circuit. ● Between CKP Sensor supply circuit and PCM harness connector. (5Volt supply circuit) Does the voltage resistance near the specified value?	—	Go to *Step 13*	Go to *Step 12*
12	Locate and repair the open circuit in the CKP or CMP sensor supply circuit. Is the action complete?	—	Verify repair	—
13	1. Disconnect the CKP and CMP sensor connector. 2. Ignition "ON." 3. Measure the voltage below the items: ● CKP sensor GND circuit and shield circuit. ● CMP sensor GND circuit and shield circuit. Does the voltage resistance near the specified value?	—	Go to *Step 15*	Go to *Step 14*
14	Locate and repair the short circuit in the CKP or CMP sensor signal or GND circuit. Is the action complete?	—	Verify repair	—
15	Are more of the following items for DTCs stored? EGR, Vapor Pressure Sensor, MAP, CKP, CMP, TPS, APS	—	Go to *applicable DTC table*	Go to *Step 16*
16	Replace the PCM. The replacement PCM must be programmed. Refer to *ON-Vehicle Service in Power Control Module and Sensors for procedures.* And also refer to latest Service Bulletin. Check to see if the latest software is released or not. And then Down Load the LATEST PROGRMMED SOFTWARE to the replacement PCM. Is the action complete?	—	Go to *OBD System Check*	—

Downloaded from www.Manualslib.com manuals search engine

Exhaust Gas Recirculation (EGR) Diagnosis

An EGR flow check diagnosis of the linear EGR system is covered by DTC P0401. Pintle position error diagnosis is covered by DTC P0402, P0404, P1404, P0405, P0406. If EGR diagnostic trouble codes P0401 and/or P0402, P0404, P1404, P0405, P0406 are encountered, refer to the DTC charts.

Engine Tech 2 Data Definitions and Ranges

A/C CLUTCH – Tech 2 Displays ON or OFF –
Indicates whether the PCM has commanded the A/C clutch ON. Used in A/C system diagnostic.

A/C REQUEST — Tech 2 Displays YES or NO —
Indicates the state of the A/C request input circuit from the HVAC controls. The PCM uses the A/C request signal to determine whether A/C compressor operation is being requested.

AIR/FUEL RATIO — Tech 2 Range 0.0-25.5 —
Air/fuel ratio indicates the PCM commanded value. In closed loop, the air/fuel ratio should normally be displayed around “14.2-14.7.” A lower air/fuel ratio indicates a richer commanded mixture, which may be seen during power enrichment or TWC protection modes. A higher air/fuel ratio indicates a leaner commanded mixture. This can be seen during deceleration fuel mode.

AP1 —Tech 2 Range 0%-100% —
AP (accelerator pedal) angle is computed by the PCM from the AP sensor voltage. AP angle should display “3%” at idle and “85-89%” at wide open throttle.

AP2 —Tech 2 Range 0%-100% —
AP (accelerator pedal) angle is computed by the PCM from the AP sensor voltage. AP angle should display “85-89%” at idle and “11-15%” at wide open throttle.

AP3 —Tech 2 Range 0%-100% —
AP (accelerator pedal) angle is computed by the PCM from the AP sensor voltage. AP angle should display “85-89%” at idle and “32-36%” at wide open throttle.

BAROMETRIC PRESSURE — Tech 2 Range 10-105 kPa/0.00-5.00 Volts —
The barometric pressure reading is determined from the MAP sensor signal monitored during key up and wide open throttle (WOT) conditions. The barometric pressure is used to compensate for altitude differences and is normally displayed around “61-104” depending on altitude and barometric pressure.

CHECK TRANS LAMP — AUTO TRANSMISSION —
Indicates the need to check for a DTC with the Tech 2 when the lamp is flashing 0.2 seconds ON and 0.2 seconds OFF.

DESIRED EGR POS. — Tech 2 Range 0%-100% —
Represents the EGR pintle position that the PCM is commanding.

DESIRED IDLE — Tech 2 Range 0-3187 RPM —
The idle speed that the PCM is commanding. The PCM will compensate for various engine loads based on engine coolant temperature, to keep the engine at the desired speed.

ECT — (Engine Coolant Temperature) Tech 2 Range –40˚C to 151˚C (–40˚F to 304˚F) —
The engine coolant temperature (ECT) is mounted in the coolant stream and sends engine temperature information to the PCM. The PCM applies 5 volts to the ECT sensor circuit. The sensor is a thermistor which changes internal resistance as temperature changes. When the sensor is cold (high resistance), the PCM monitors a high signal voltage and interprets that as a cold engine. As the sensor warms (decreasing resistance), the voltage signal will decrease and the PCM will interpret the lower voltage as a warm engine.

EGR DUTY CYCLE — Tech 2 Range 0%-100% —
Represents the EGR valve driver PWM signal from the PCM. A duty cycle of 0% indicates that no EGR flow is being commanded; a 100% duty cycle indicates maximum EGR flow commanded.

EGR FEEDBACK — Tech 2 Range 0.00-5.00 Volts —
Indicates the EGR pintle position sensor signal voltage being monitored by the PCM. A low voltage indicates a fully extended pintle (closed valve); a voltage near 5 volts indicates a retracted pintle (open valve).

ENGINE LOAD — Tech 2 Range 0%-100% —
Engine load is calculated by the PCM from engine speed and MAF sensor readings. Engine load should increase with an increase in RPM or air flow.

ENGINE RUN TIME — Tech 2 Range 00:00:00-99:99:99 Hrs:Min:Sec —
Indicates the time elapsed since the engine was started. If the engine is stopped, engine run time will be reset to 00:00:00.

ENGINE SPEED — Range 0-9999 RPM —
Engine speed is computed by the PCM from the 58X reference input. It should remain close to desired idle under various engine loads with engine idling.

EVAP PURGE PWM — Tech 2 Range 0%-100% —
Represents the PCM commanded PWM duty cycle of the EVAP purge solenoid valve. “0%” displayed indicates no purge; “100%” displayed indicates full purge.

EVAP VACUUM SWITCH (Vent Valve) — Tech 2 Displays ON or OFF —
The EVAP purge vacuum switch is a normally closed switch positioned in the purge line between the canister and the EVAP purge solenoid. The EVAP purge vacuum switch will open when vacuum increases to greater than 5 inches of water in the purge line. The EVAP purge vacuum switch is used by the PCM to monitor EVAP canister purge solenoid operation and purge system integrity. The EVAP purge vacuum switch should be closed to ground with no vacuum present (0% EVAP purge PWM). With EVAP purge PWM at 25% or greater, the EVAP purge vacuum switch should be open and “PURGE” should be indicated.

Downloaded from www.Manualslib.com manuals search engine

FUEL PUMP — Tech 2 Displays ON or OFF —
Indicates the PCM commanded state of the fuel pump relay driver circuit.

HO2S BANK 1, SEN. 1
— Tech 2 Range 0-1132 mV —
Represents the fuel control exhaust oxygen sensor output voltage. Should fluctuate constantly within a range between 10 mV (lean exhaust) and 1000 mV (rich exhaust) while operating in closed loop.

HO2S BANK 1, SEN. 2
— Tech 2 Range 0-1000mV —
Monitors the exhaust oxygen sensor output voltage. The PCM monitors the operating efficiency of catalytic converter by comparing the output voltages of sensor 1 and sensor 2 in this bank. If the catalytic converter is operating efficiently, the output voltage of sensor 1 will give a greater fluctuation than that of sensor 2. If the PCM detects an abnormal level of voltage fluctuation from sensor 2, a DTC P0420 will be set, indicating that the catalytic converter for this bank is no longer operating efficiently.

HO2S BANK2, SEN. 1 —Tech 2 Range 0-1132 mV—
Represents the fuel control exhaust oxygen sensor output voltage. Should fluctuate constantly within a range between 10mV (lean exhaust) and 1000 mV (rich exhaust) while operating in closed loop.

HO2S BANK 2, SEN. 2—Tech 2 Range 0-1000 mV—
Monitors the exhaust oxygen sensor output voltage. The PCM monitors the operating efficiency of catalytic converter by comparing the output voltages of sensor 1 and sensor 2 in this bank. If the catalytic converter is operating efficiently, the output voltage of sensor 1 will have a greater fluctuation than that of sensor 2. If the PCM detects an abnormal level of voltage fluctuation from sensor 2, a DTC P0430 will be set, indicating that the catalytic converter for this bank is no longer operating efficiently.

HO2S BANK 1, SEN. 1—Tech 2 Displays NOT READY or READY—
Indicates the status of the exhaust oxygen sensor. The Tech 2 will indicate that the exhaust oxygen sensor is ready when the PCM detects a fluctuating HO2S voltage sufficient to allow closed loop operation. This will not occur unless the exhaust oxygen sensor is warmed up.

HO2S BANK 2, SEN. 1 — Tech 2 Displays NOT READY or READY —
Indicates the status of the exhaust oxygen sensor. The Tech 2 will indicate that the exhaust oxygen sensor is ready when the PCM detects a fluctuating HO2S voltage sufficient to allow closed loop operation. This will not occur unless the exhaust oxygen sensor is warmed up.

HO2S WARM UP TIME BANK 1, SEN. 1/BANK 1, SEN 2/BANK 2 SEN. 1/BANK 2 SEN. 2 — Tech 2 Range 00:00:00-99:99:99 HRS:MIN:SEC —
Indicates warm-up time for each HO2S. The HO2S warm-up time is used for the HO2S heater test. The PCM will run the heater test only after a cold start (determined by engine coolant and intake air temperature at the time of start-up) and only once during an ignition cycle. When the engine is started the PCM will monitor the HO2S voltage. When the HO2S voltage indicates a sufficiently active sensor, the PCM looks at how much time has elapsed since start-up. If the PCM determines that tool much time was required for the HO2S to become active, a DTC will set. If the engine was warm when started, HO2S warm-up will the display “00:00:00”.

IAT (INTAKE AIR TEMPERATURE) — Tech 2 Range –40˚C to 151˚C (–40˚F to 304˚F) —
The PCM converts the resistance of the intake air temperature sensor to degrees. Intake air temperature (IAT) is used by the PCM to adjust fuel delivery and spark timing according to incoming air density.

IGNITION 1 — Tech 2 Range 0-25.5 Volts —
This represents the system voltage measured by the PCM at its ignition feed.

INJ. PULSE BANK 1/INJ. PULSE BANK 2 — Tech 2 Range 0-1000 msec. —
Indicates the amount of time the PCM is commanding each injector “ON” during each engine cycle. A longer injector pulse width will cause more fuel to be delivered. Injector pulse width should increase with increased engine load.

LONG TERM FUEL TRIM BANK 1/BANK 2 —
The long term fuel trim is derived from the short term fuel trim values and represents a long term correction of fuel delivery for the bank in question. A value of 0% indicates that fuel delivery requires no compensation to maintain the PCM commanded air/fuel ratio. A negative value significantly below 0% indicates that the fuel system is rich and fuel delivery is being reduced (decreased injector pulse width). A positive value significantly greater than 0% indicates that a lean condition exists and the PCM is compensating by adding fuel (increased injector pulse width). Because long term fuel trim tends to follow short term fuel trim, a value in the negative range due to canister purge at idle should not be considered unusual. Fuel trim values at maximum authority may indicate an excessively rich or lean system.

Fuel System STATUS — Tech 2 Displays OPEN or CLOSED —
“CLOSED” indicates that the PCM is controlling fuel delivery according to oxygen sensor voltage. In “OPEN” the PCM ignores the oxygen sensor voltage and bases the amount of fuel to be delivered on TP sensor, engine coolant, and MAF sensor inputs only.

MAF — Tech 2 Range 0.0-512 gm/s —
MAF (mass air flow) is the MAF input frequency converted to grams of air per second. This indicates the amount of air entering the engine.

Downloaded from www.Manualslib.com manuals search engine

MAP
— Tech 2 Range 10-105 kPa (0.00-4.97 Volts) —
The manifold absolute pressure (MAP) sensor measures the change in the intake manifold pressure from engine load, EGR flow, and speed changes. As intake manifold pressure increases, intake vacuum decreases, resulting in a higher MAP sensor voltage and kPa reading. The MAP sensor signal is used to monitor intake manifold pressure changes during the EGR flow test, to update the BARO reading, and as an enabling factor for several of the diagnostics.

MIL — Tech 2 Displays ON or OFF —
Indicates the PCM commanded state of the malfunction indicator lamp.

MISFIRE CUR. CYL. #1 /#2 /#3 /#4 / #5 / #6 — Tech 2 Range 0-255 Counts —
The misfire current counters increase at a rate according to the number of the possible misfires being detected on each cylinder. The counters may normally display some activity, but the activity should be nearly equal for all the cylinders.

MISFIRE CUR. CYL. #1 /#2 /#3 /#4 / #5 / #6 — Tech 2 Range 0-65535 Counts —
The misfire history counters display the relative level of misfire that has been detected on each cylinder. The misfire history counters will not update or show any activity until a misfire DTC (P0300) has become active.

MISFIRE FAILURES SINCE FIRST FAIL — Tech 2 Range 0-65535 Counts —
Indicates the number of 200 crankshaft revolution sample periods during which the level of misfire was sufficiently high to report a fail.

MISFIRE PASSES SINCE FIRST FAIL — Tech 2 Range 0-65535 Counts —
Indicates the number of 200 crankshaft revolution sample periods during which the level of misfire was sufficiently low to report a pass.

POWER ENRICHMENT — Tech 2 Displays ACTIVE or INACTIVE —
"ACTIVE" displayed indicates that the PCM has detected conditions appropriate to operate in power enrichment mode. The PCM will command power enrichment mode when a large increase in throttle position and load is detected. While in power enrichment mode, the PCM will increase the amount of fuel delivered by entering open loop and increasing the injector pulse width. This is done to prevent a possible sag or hesitation from occurring during acceleration.

SPARK — Tech 2 Range –64˚ to 64˚ —
Displays the amount of spark advance being commanded by the PCM on the IC circuit.

START-UP ECT — Tech 2 Range –40˚C to 151˚C (–40˚F to 304˚F) —
Indicates the engine coolant temperature at the time that the vehicle was started. Used by the HO2S diagnostic to determine if the last start-up was a cold start.

START-UP IAT — Tech 2 Range –40˚C to 151˚C (–40˚F to 304˚F) —
Indicates the intake air temperature at the time that the vehicle was started. Used by the HO2S diagnostic to determine if the last start-up was a cold start.

TOTAL MISFIRE CURRENT COUNT — Tech 2 Range 0-255 —
Indicates the total number of cylinder firing events that were detected as being misfires during the last 200 crankshaft revolution sample period.

TP — Tech 2 Range 0%-100% —
TP (throttle position) angle is computed by the PCM from the TP sensor voltage. TP angle should display "8-13%" at idle and "87-97%" at wide open throttle.

CATALYST PROTECTION MODE — Tech 2 Displays YES or NO —
"YES" displayed indicates that the PCM has detected conditions appropriate to operate in TWC protection mode. The PCM will decrease the air/fuel ratio to a value that depends on mass air flow (higher mass air flow = lower air/fuel ratio).

UPSHIFT LAMP (MANUAL TRANSMISSION) VEHICLE SPEED — Tech 2 Range 0-255 km/h (0-155 mph) —
The vehicle speed sensor signal is converted into km/h and mph for display.

WEAK CYLINDER — Tech 2 Displays Cylinder Number —
This indicates that the PCM has detected crankshaft speed variations that indicate 2% or more cylinder firing events are misfires.

Typical Scan Data Values

Use the Typical Scan Data Values Table only after the On-Board Diagnostic System Check has been completed, no DTC(s) were noted, and you have determined that the on-board diagnostics are functioning properly. Tech 2 values from a properly-running engine may be used for comparison with the engine you are diagnosing. The typical scan data values represent values that would be seen on a normally-running engine.

NOTE: A Tech 2 that displays faulty data should not be used, and the problem should be reported to the Tech 2 manufacturer. Use of a faulty Tech 2 can result in misdiagnosis and unnecessary replacement of parts.

Only the parameters listed below are referred to in this service manual for use in diagnosis. For further information on using the Tech 2 to diagnose the PCM and related sensors, refer to the applicable reference section listed below. If all values are within the typical range described below, refer to the *Symptoms* section for diagnosis.

Test Conditions

Engine running, lower radiator hose hot, transmission in park or neutral, closed loop, accessaries off, brake not applied and air conditioning off.

Downloaded from www.Manualslib.com manuals search engine

3.5L V-6 Engine (Automatic and Manual Transmission)

Tech 2 Parameter	Data List	Units Displayed	Typical Data Values (IDLE)	Typical Data Values (2500 RPM)	Refer To
A/C Clutch Relay	Engine	On/Off	Off	Off	General Description and Operation, A/C Clutch Circuit Operation
A/C Request	Engine	Yes/No	No	No	General Description and Operation, A/C Request Signal
Air/Fuel Ratio	Engine	Ratio: _ to 1	14.7	14.7	General Description and Operation, Fuel System Metering Purpose
APP Sensor1	Engine	Percent	11–13	35–40	General Description and Operation
APP Sensor2	Engine	Percent	87–88	60–65	General Description and Operation
APP Sensor3	Engine	Percent	87–88	50–57	General Description and Operation
Barometric Pressure	Engine	kPa	61-104 (depends on altitude and barometric)	61-104 (depends on altitude and barometric)	General Description and Operation
Brake Light Switch	Engine	Open 0V/Closed 12V	Open 0V	Open 0V	Refer to Section 5
Check Trans Lamp (**Auto Trans**)	Engine	On/Off	Off	Off	4L30-E Automatic Transmission Diagnosis
Cruise Main Switch	Engine	Active/Inactive	Inactive	Inactive	Refer to Section 10
Cruise Set Switch	Engine	Active/Inactive	Inactive	Inactive	Refer to Section 10
Cruise Cancel Switch	Engine	Active/Inactive	Inactive	Inactive	Refer to Section 10
Cruise Resume Switch	Engine	Active/Inactive	Inactive	Inactive	Refer to Section 10
Decel Fuel Cutoff	Engine	Active/Inactive	Inactive	Inactive	General Description and Operation, Deceleration Mode
Desired EGR Position	Engine	Percent	0%	0%	General Description and Operation, EGR Pintle Position Sensor
Desired Idle Speed	Engine	RPM	750	800	General Description and Operation
ECT (Engine Coolant Temp)	Engine	Degrees C, Degrees F	80-100˚C (176-212˚F)	80-100˚C (176-212˚F)	General Description and Operation, Engine Coolant Temperature (ECT) Sensor
EGR Closed Pintle Position	Engine	Steps	20-40	20-40	General Description and Operation, EGR Pintle Position Sensor
EGR Duty Cycle	Engine	Percent	0%	0%	General Description and Operation, Linear EGR Operation and Results of Incorrect Operation

Downloaded from www.Manualslib.com manuals search engine

Tech 2 Parameter	Data List	Units Displayed	Typical Data Values (IDLE)	Typical Data Values (2500 RPM)	Refer To
EGR Feedback	Engine	Volts	0.45-0.80	0.45-0.80	—
EGR Normalized	Engine	Percent	0%	0%	—
Engine Load	Engine	Percent	2.0% - 5.5%	8.0% - 16.0%	General Description and Operation, Mass Air Flow (MAF) Sensor
Time From Start	Engine	Sec	Varies. Resets at each engine start.	Varies. Resets at each engine start.	—
Engine Speed	Engine	RPM	Within –50 to +100 of “Desired Idle”	Actual engine speed	—
EVAP Purge Solenoid	Engine	Percent	0%	0%	Diagnosis, EVAP Emission Canister Purge Valve Check
EVAP Vent Valve	Engine	On/Off	Off	Off	Diagnosis, EVAP Canister Purge Solenoid and EVAP Vacuum Switch and Visual Check; DTCs: P1441, P1442
Fuel System Status	Engine	Open Loop/Closed Loop	Closed Loop	Closed Loop	General Description
Fuel Level	Engine	Percent	—	—	Engine Fuel
Fuel Level Sensor	Engine	Volts	—	—	Engine Fuel
Fuel Tank Pressure Sensor	Engine	Volts	1.02 – 1.86	1.02 – 2.57	General Description and Operation
		in. H2O	—	—	
Fuel Pump	Engine	On/Off	On	On	Engine Fuel
HO2S Bank 1 Sen.1 (millivolts)	O2 Sensor Data	Millivolts	50-950 changing quickly	50-950, always changing quickly	General Description and Operation, Fuel control HO2S
HO2S Bank 1 Sen.2 (millivolts) (**Auto Trans**)	O2 Sensor Data	Millivolts	200-700 changing slowly	250-650 changing slowly	General Description and Operation, Fuel Metering System
HO2S Bank 1 Sen.2 (millivolts) (**Manual Trans**)	O2 Sensor Data	Millivolts	50-950 changing quickly	50-950 changing quickly	General Description and Operation, Fuel Metering System
HO2S Bank 1 Sen.3 (millivolts) (**Manual Trans**)	O2 Sensor Data	Millivolts	200-700 changing slowly	250-650 changing slowly	General Description and Operation, Catalyst Monitor Heated Oxygen Sensor (Manual Trans)
HO2S Bank 2 Sen.1 (millivolts)	O2 Sensor Data	Millivolts	50-950 changing quickly	50-950 changing quickly	General Description and Operation, Fuel Control HO2S
HO2S Bank 2 Sen.2 (millivolts) (**Auto trans**)	O2 Sensor Data	Millivolts	200-700 changing slowly	250-650 changing slowly	General Description and Operation, Fuel Metering System

Downloaded from www.Manualslib.com manuals search engine

Tech 2 Parameter	Data List	Units Displayed	Typical Data Values (IDLE)	Typical Data Values (2500 RPM)	Refer To
HO2S Bank 1 Sen.1 (ready/not ready)	O2 Sensor Data	Ready Yes/No	Ready Yes	Ready Yes	General Description and Operation, Fuel Control HO2S; DTC: P0135
HO2S Bank 2 Sen.1 (ready/not ready)	O2 Sensor Data	Ready Yes/No	Ready Yes	Ready Yes	General Description and Operation, Fuel Control HO2S
HO2S Warm-Up Time Bank 1 Sen.1	O2 Sensor Data	Seconds	25-45	25-45	General Description and Operation, Fuel Control HO2S
HO2S Warm-Up Time Bank 1 Sen.2	O2 Sensor Data	Seconds	60-100	60-100	General Description and Operation, Fuel Control HO2S
HO2S Warm-Up Time Bank 2 Sen.1	O2 Sensor Data	Seconds	25-45	25-45	General Description and Operation, Fuel Control HO2S
HO2S Warm-Up Time Bank 2 Sen.2	O2 Sensor Data	Seconds	60-100	60-100	General Description and Operation, Catalyst Monitor Heated Oxygen Sensor (Auto Trans)
IAT (Intake Air Temp)	Engine	Degrees C, Degrees F	0-100˚C, depends on underhood	0-80˚C, depends on underhood	General Description and Operation, Intake Air Temperature (IAT) Sensor
Illumination Switch	Engine	Closed 0V/Open 12V	Closed 0V	Closed 0V	Refer to Section 8
Ignition Voltage	Engine	Volts	12.8-14.1	12.8-14.1	General Description and Operation, Electronic Ignition System
Inj. Pulse Bank 1	Engine	Milliseconds	2.0-4.0	2.5-4.0	General Description, Fuel Metering, Fuel Injector
Inj. Pulse Bank 2	Engine	Milliseconds	2.0-4.0	2.5-4.0	General Description, Fuel Metering, Fuel Injector
Knock Present	Engine	No/Yes	No	No	General Description and ION Sensing Module
Knock Signal	Engine	Percent	1~4	1~4	General Description and ION Sensing Module
Knock Sensor Retard	Engine	˚CA	0	0	General Description and ION Sensing Module
Knock Counter	Engine	Counts	—	—	General Description
Long Term FT Bank 1 (Long Term Fuel Trim)	Misfire	Counts and Percent	100 to 150 counts, –22% to +17%	100 to 150 counts, –22% to +17%	Diagnosis, Fuel Trim System Monitor; DTCs: P0171, P0172
Long Term FT Bank 2 (Long Term Fuel Trim)	Misfire	Counts and Percent	100 to 150 counts, –22% to +17%	100 to 150 counts, –22% to +17%	Diagnosis, Fuel Trim System Monitor; DTCs: P0171
MAF (Mass Air Flow)	Engine	Grams per second	2.85-6.65	9.5-16.5	General Description and Operation, MAF; DTCs: P101, P0102, P0103

Downloaded from www.Manualslib.com manuals search engine

Tech 2 Parameter	Data List	Units Displayed	Typical Data Values (IDLE)	Typical Data Values (2500 RPM)	Refer To
MAP kPa (Manifold Absolute Pressure)	Engine	Kilopascals	23-40	19-32	General Description and Operation, Manifold Absolute Pressure (MAP) Sensor; DTCs: P0106, P0107, P0108
		Volts	0.65-1.32	0.46-1.10	
MIL	Engine	On/Off	Off	Off	On-Board Diagnostic System Check
Misfire Cur. Cyl #1	Misfire	Counts	0-2	0-2	DTC P0300
Misfire Cur. Cyl #2	Misfire	Counts	0-2	0-2	DTC P0300
Misfire Cur. Cyl #3	Misfire	Counts	0-2	0-2	DTC P0300
Misfire Cur. Cyl #4	Misfire	Counts	0-2	0-2	DTC P0300
Misfire Cur. Cyl #5	Misfire	Counts	0-2	0-2	DTC P0300
Misfire Cur. Cyl #6	Misfire	Counts	0-2	0-2	DTC P0300
Misfire Hist. Cyl #1	Misfire	Counts	0	0	DTC P0300
Misfire Hist. Cyl #2	Misfire	Counts	0	0	DTC P0300
Misfire Hist. Cyl #3	Misfire	Counts	0	0	DTC P0300
Misfire Hist. Cyl #4	Misfire	Counts	0	0	DTC P0300
Misfire Hist. Cyl #5	Misfire	Counts	0	0	DTC P0300
Misfire Hist. Cyl #6	Misfire	Counts	0	0	DTC P0300
Misfire Failures Since First Fail	Misfire	Counts	0	0	DTC P0300
Misfire Passes Since First Fail	Misfire	Counts	0	0	DTC P0300
PNP (Park/Neutral Position)	Engine	P-N / R-D-3-2-L	P-N	P-N	4L30-E Automatic Transmission Diagnosis
Power Enrichment	Engine	NO/YES	NO	NO	General Description and Operation, Acceleration Mode
PSP Switch (Power Steering Pressure)	Engine	Normal/Hi	Normal Pressure	Normal Pressure	Refer to 2A Section
Spark (Advance)	Engine	Degrees Before Top Dead Center	15-22	34-44	General Description and Operation, Electronic Ignition System
Start-Up ECT (Engine Coolant Temp)	Engine	Degrees C, Degrees F	Depends on engine coolant temperature at time of start-up	Depends on engine coolant temperature at time of start-up	General Description and Operation, Engine Coolant Temperature (ECT) Sensor

Downloaded from www.Manualslib.com manuals search engine

Tech 2 Parameter	Data List	Units Displayed	Typical Data Values (IDLE)	Typical Data Values (2500 RPM)	Refer To
Start-Up IAT (Intake Air Temp)	Engine	Degrees C, Degrees F	Depends on intake air temperature at time of start-up	Depends on intake air temperature at time of start-up	General Description and Operation, Intake Air Temperature (IAT) Sensor
TCC Cruise Brake Switch	Engine	Active/Inactive	Active	Active	Refer to Section 10
Total Misfire Current Count	Misfire	Counts	0-5	0-5	DTC P0300
TP Sensor 1 (Throttle Position Sensor 1)	Engine	Percent	3–13	12–21	General Description and Operation, Throttle Position (TP) Sensor
TP Sensor 2 (Throttle Position Sensor 2)	Engine	Percent	87–97	79–88	General Description and Operation, Throttle Position (TP) Sensor
Throttle at Idle	Engine	No/Yes	Yes	No	General Description and Operation, Throttle Position (TP) Sensor
Upshift Lamp (manual trans)	Engine	On/Off	Off	Off	Manual Transmission
Vehicle Speed	Engine	MPH / km/h	0	0	4L30-E Automatic Transmission Diagnosis
Weak Cylinder	Misfire	Cylinder #	—	—	DTC P0300

Downloaded from www.Manualslib.com manuals search engine

No Malfunction Indicator Lamp (MIL)

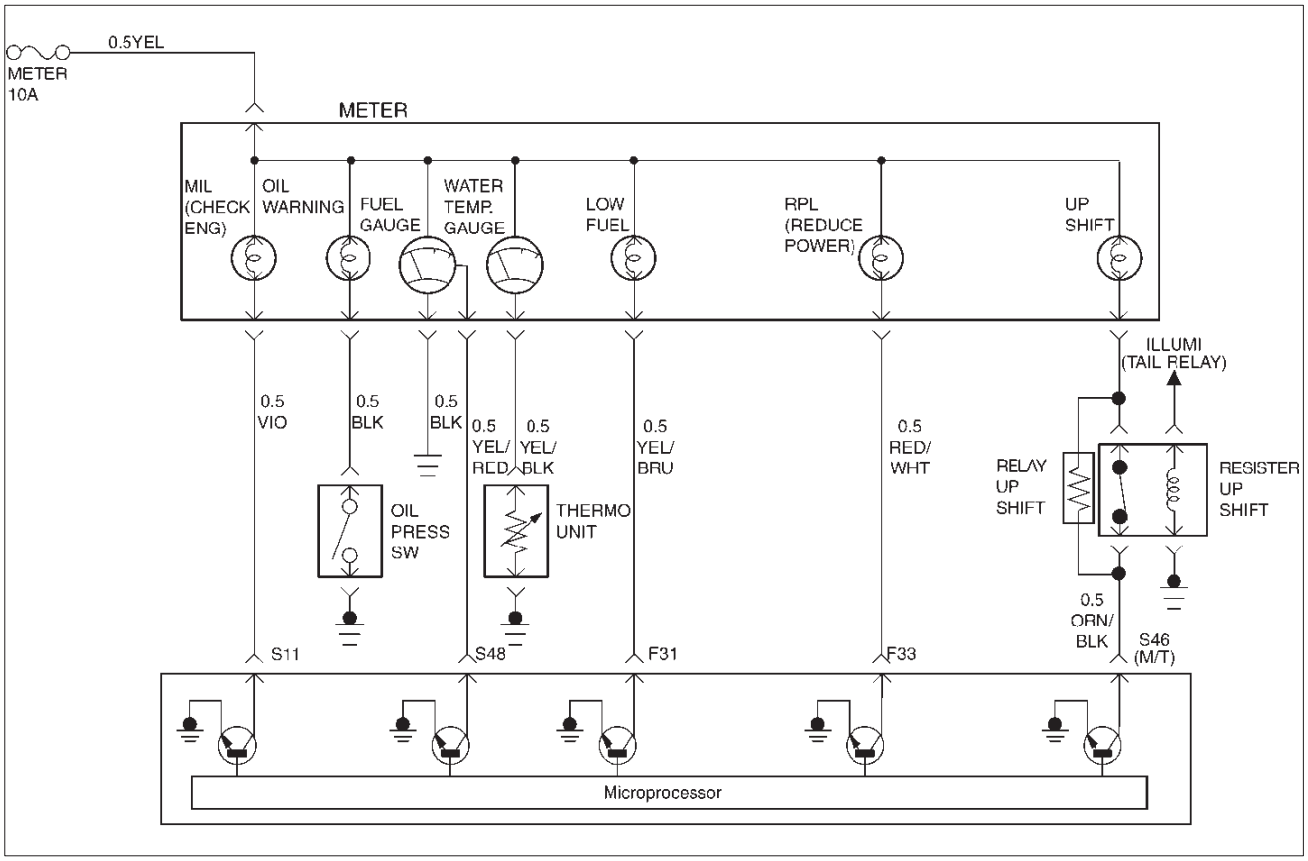

D06RY00127

Circuit Description

The “Check Engine” lamp (MIL) should always be illuminated and steady with the ignition “ON” and the engine stopped. Ignition feed voltage is supplied to the MIL bulb through the meter fuse. The powertrain control module (PCM) turns the MIL “ON” by grounding the MIL driver circuit.

Diagnostic Aids

An intermittent MIL may be cased by a poor connection, rubbed-through wire insulation, or a wire broken inside the insulation. Check for the following items:

- Inspect the PCM harness and connections for improper mating, broken locks, improperly formed or damaged terminals, poor terminal-to-wire connection, and damaged harness.
- If the engine runs OK, check for a faulty light bulb, an open in the MIL driver circuit, or an open in the instrument cluster ignition feed.
- If the engine cranks but will not run, check for an open PCM ignition or battery feed, or a poor PCM to engine ground.

Test Description

Number(s) below refer to the step number(s) on the Diagnostic Chart.

2. A “No MIL” condition accompanied by a no-start condition suggests a faulty PCM ignition feed or battery feed circuit.

9. Using a test light connected to B+, probe each of the PCM ground terminals to ensure that a good ground is present. Refer to *PCM Terminal End View* for terminal locations of the PCM ground circuits.

12. In this step, temporarily substitute a known good relay for the PCM relay. The horn relay is nearby, and it can be verified as “good” simply by honking the horn. Replace the horn relay after completing this step.

17. This vehicle is equipped with a PCM which utilizes an electrically erasable programmable read only memory (EEPROM). When the PCM is replaced, the new PCM must be programmed. Refer to *PCM Replacement and Programming Procedures Powertrain Control Module (PCM) and Sensors.*

Downloaded from www.Manualslib.com manuals search engine

No Malfunction Indicator Lamp (MIL)

Step	Action	Value(s)	Yes	No
1	Was the “On-Board Diagnostic (OBD) System Check” performed?	—	Go to *Step 2*	Go to *OBD System Check*
2	Attempt to start the engine. Does the engine start?	—	Go to *Step 3*	Go to *Step 6*
3	Check the meter fuse for the instrument cluster ignition feed circuit. Is the fuse OK?	—	Go to *Step 4*	Go to *Step 16*
4	Ignition “ON,” probe the ignition feed circuit at the cluster connector with a test light to ground. Is the test light “ON?”	—	Go to *Step 5*	Go to *Step 13*
5	1. Ignition “OFF.” 2. Disconnect the PCM. 3. Jumper the MIL driver circuit at the PCM connector to ground. 4. Ignition “ON.” Is the MIL “ON?”	—	Go to *Step 10*	Go to *Step 11*
6	Check the PCM ignition feed and battery feed fuses (15 A engine fuse and 15 A PCM fuse). Are both fuses OK?	—	Go to *Step 7*	Go to *Step 15*
7	1. Ignition “OFF.” 2. Disconnect the PCM. 3. Ignition “ON.” 4. Probe the ignition feed circuit at the PCM harness connector with a test light to ground. Is the test light “ON?”	—	Go to *Step 8*	Go to *Step 12*
8	Probe the battery feed circuit at the PCM harness connector with a test light to ground. Is the test light “ON?”	—	Go to *Step 9*	Go to *Step 14*
9	Check for a faulty PCM ground connection. Was a problem found?	—	Verify repair	Go to *Step 10*
10	Check for damaged terminals at the PCM. Was a problem found?	—	Verify repair	Go to *Step 17*
11	Check for an open MIL driver circuit between the PCM and the MIL. Was a problem found?	—	Verify repair	Go to *Step 18*
12	Substitute a known “good” relay for the PCM main relay. Was the malfunction fixed?	—	Verify repair	Go to *Step 13*
13	Repair the open in the ignition feed circuit. Is the action complete?	—	Verify repair	—
14	Locate and repair the open PCM battery feed circuit. Is the action complete?	—	Verify repair	—

Downloaded from www.Manualslib.com manuals search engine

No Malfunction Indicator Lamp (MIL) (Cont'd)

Step	Action	Value(s)	Yes	No
15	Locate and repair the short to ground in the PCM ignition feed circuit or PCM battery feed circuit. Is the action complete?	—	Verify repair	—
16	Locate and repair the short to ground in the ignition feed circuit to the instrument cluster, and replace the fuse. Is the action complete?	—	Verify repair	—
17	Replace the PCM. **IMPORTANT:** The replacement PCM must be programmed. Refer to *PCM* in *ON-Vehicle Service* for procedures. And also refer to latest Service Bulletin. Check to see if the Latest software is released or not. And then Down Load the LATEST PROGRAMMED SOFTWARE to the replacement PCM. Is the action complete?	—	Verify repair	—
18	Check the MIL driver circuit for a poor connection at the instrument panel connector. Was a problem found?	—	Verify repair	Go to *Instrument Panel* in *Electrical Diagnosis*

Downloaded from www.Manualslib.com manuals search engine

Malfunction Indicator Lamp (MIL) “ON” Steady

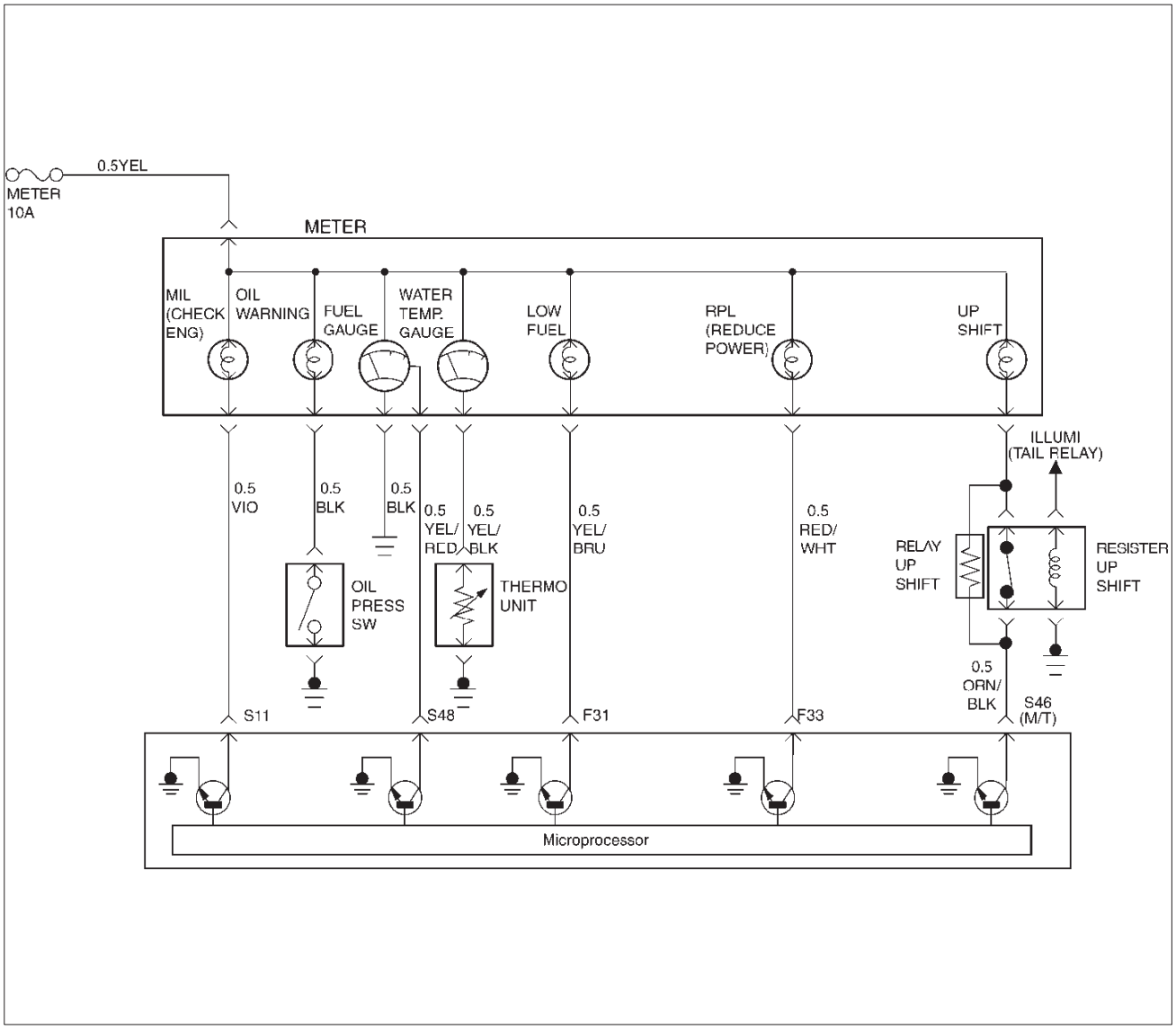

D06RY00127

Circuit description

The malfunction indicator lamp (MIL) should always be illuminated and steady with ignition “ON” and the engine stopped. Ignition feed voltage is supplied directly to the MIL indicator. The powertrain control module (PCM) turns the MIL “ON” by grounding the MIL driver circuit. The MIL should not remain “ON” with the engine running and no DTC(s) set. A steady MIL with the engine running and no DTC(s) suggests a short to ground in the MIL driver circuit.

Diagnostic Aids

An intermittent may be caused by a poor connection, rubbed-through wire insulation, or a wire broken inside the insulation. Check for the following items:

- Poor connection or damaged harness – Inspect the PCM harness and connectors for improper mating, broken locks, improperly formed or damaged terminals, poor terminal-to-wire connection, and damaged harness.

Test Description

Number(s) below refer to the step number(s) on the Diagnostic Chart.

2. If the MIL does not remain “ON” when the PCM is disconnected, the MIL driver wiring is not faulty.
3. If the MIL driver circuit is OK, the instrument panel cluster is faulty.
6. This vehicle is equipped with a PCM which utilizes an electrically erasable programmable read only memory (EEPROM). When the PCM is replaced, the new PCM must be programmed. Refer to *PCM Replacement and Programming Procedures* in *Powertrain Control Module (PCM) and Sensors.*

Downloaded from www.Manualslib.com manuals search engine

Malfunction Indicator Lamp (MIL) “ON” Steady

Step	Action	Value(s)	Yes	No
1	Was the “On-Board diagnostic (OBD) System Check” performed?	—	Go to *Step 2*	Go to *OBD System Check*
2	1. Ignition “OFF,” disconnect PCM. 2. Ignition “ON,” observe the MIL (Service Engine Soon lamp). Is the MIL “ON?”	—	Go to *Step 3*	Go to *Step 5*
3	1. Ignition “OFF,” disconnect the instrument panel cluster. 2. Check the MIL driver circuit between the PCM and the instrument panel cluster for a short to ground. 3. If a problem is found, repair as necessary. Was the MIL driver circuit shorted to ground?	—	Go to *OBD System Check*	Go to *Step 4*
4	Replace the instrument panel cluster. Is the action complete?	—	Go to *OBD System Check*	—
5	1. Ignition “OFF,” reconnect the PCM. 2. Ignition “ON,” reprogram the EEPROM. Refer to *On-Vehicle Service* in *Powertrain Control Module and Sensors* for procedures. 3. Using the Tech 2 output controls function, select MIL dash lamp control and command the MIL “OFF.” (Refer to the Miscellaneous test) Did the MIL turn “OFF?”	—	Go to *OBD System Check*	Go to *Step 6*
6	Replace the PCM. **IMPORTANT:** The replacement PCM must be programmed. Refer to *On-Vehicle Service* in *Powertrain Control Module and Sensors for procedures.* And also refer to latest Service Bulletin. Check to see if the Latest software is released or not. And then Down Load the LATEST PROGRAMMED SOFTWARE to the replacement PCM. Is the action complete?	—	Go to *OBD System Check*	—

Downloaded from www.Manualslib.com manuals search engine

No Reduced Power Lamp (RPL)

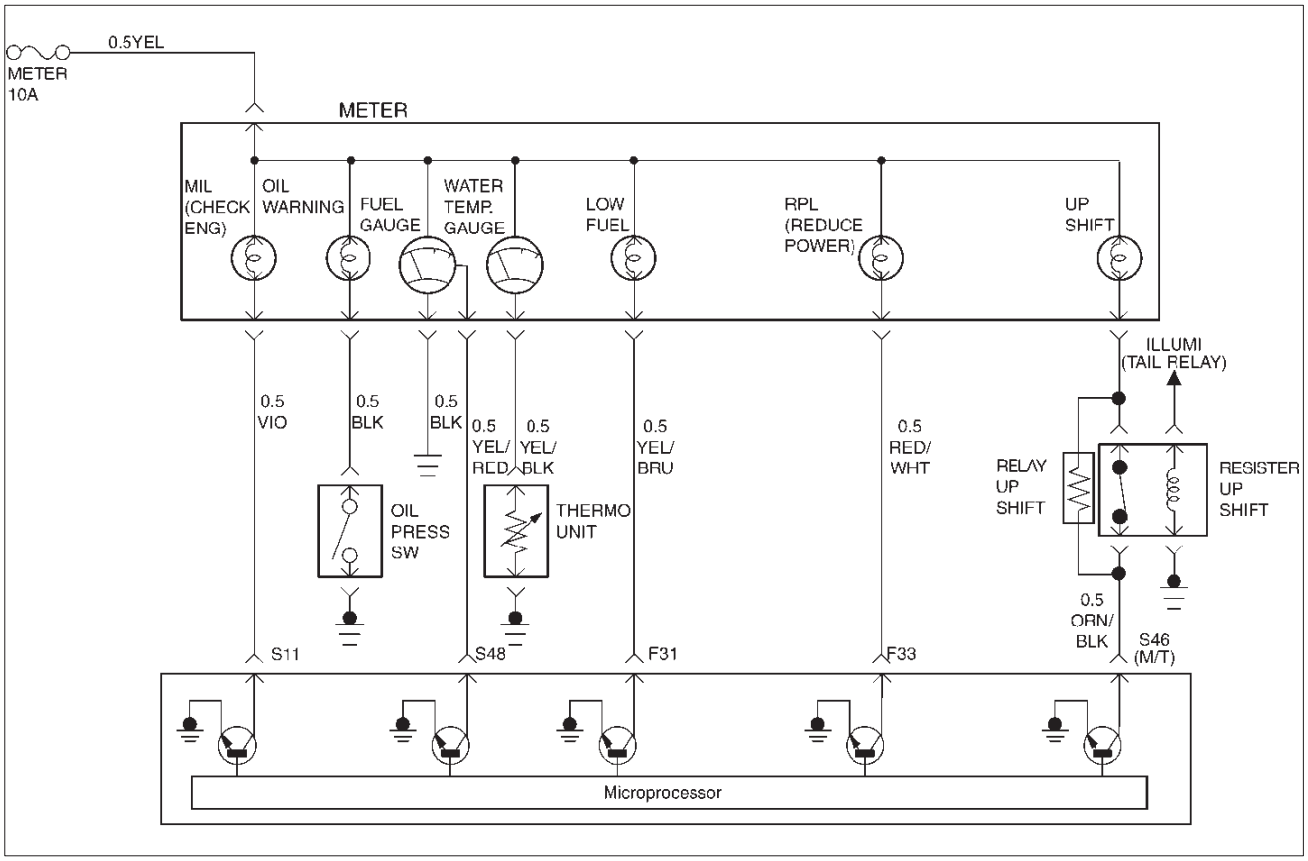

D06RY00127

Circuit Description

The Reduced Power lamp (RPL) should always be illuminated and steady with the ignition “ON” and the engine stopped. Ignition feed voltage is supplied to the RPL bulb through the meter fuse. The powertrain control module (PCM) turns the RPL “ON” by grounding the RPL driver circuit.

Diagnostic Aids

An intermittent RPL may be cased by a poor connection, rubbed - through wire insulation, or a wire broken inside the insulation. Check for the following items:

- Inspect the PCM harness and connections for improper mating, broken locks, improperly formed or damaged terminals, poor terminal-to-wire connection, and damaged harness.
- If the engine runs OK, check for a faulty light bulb, an open in the MIL driver circuit, or an open in the instrument cluster ignition feed.
- If the engine cranks but will not run, check for an open PCM ignition or battery feed, or a poor PCM to engine ground.

Test Description

Number(s) below refer to the step number(s) on the Diagnostic Chart.

2. A “ No RPL”condition accompanied by a no - start condition suggests a faulty PCM ignition feed or battery feed circuit.

9. Using a test light connected to B + , probe each of the PCM ground terminals to ensure that a good ground is present. Refer toPCM Terminal End View for terminal locations of the PCM ground circuits.

12. In this step, temporarily substitute a known good relay for the PCM relay. The horn relay is nearby, and it can be verified as “good” simply by honking the horn. Replace the horn relay after completing this step.

17. This vehicle is equipped with a PCM which utilizes an electrically erasable programmable read only memory (EEPROM). When the PCM is replaced, the new PCM must be programmed. Refer to PCM Replacement and Programming Procedures in Powertrain Control Module (PCM) and Sensors.

Downloaded from www.Manualslib.com manuals search engine

No Reduced Power Lamp (RPL)

Step	Action	Value(s)	Yes	No
1	Was the “On - Board Diagnostic (OBD) System Check” performed?	—	Go to *Step 2*	Go to *OBD System Check*
2	Attempt to start the engine. Does the engine start?	—	Go to *Step 3*	Go to *Step 6*
3	Check the meter fuse for the instrument cluster ignitionfeed circuit. Is the fuse OK?	—	Go to *Step 4*	Go to *Step 16*
4	Ignition “ON,” probe the ignition feed circuit at thecluster connector with a test light to ground. Is the test light “ON?”	—	Go to *Step 5*	Go to *Step 13*
5	1. Ignition “OFF.” 2. Disconnect the PCM. 3. Jumper the RPL driver circuit at the PCM connector to ground. 4. Ignition “ON.” Is the RPL “ON?”	—	Go to *Step 10*	Go to *Step 11*
6	Check the PCM ignition feed and battery feed fuses (15A engine fuse and 15 A PCM fuse). Are both fuses OK?	—	Go to *Step 7*	Go to *Step 15*
7	1. Ignition “OFF.” 2. Disconnect the PCM. 3. Ignition “ON.” 4. Probe the ignition feed circuit at the PCM harness connector with a test light to ground. Is the test light “ON?”	—	Go to *Step 8*	Go to *Step 12*
8	Probe the battery feed circuit at the PCM harness connector with a test light to ground. Is the test light “ON?”	—	Go to *Step 9*	Go to *Step 14*
9	Check for a faulty PCM ground connection. Was a problem found?	—	Verify repair	Go to *Step 10*
10	Check for damaged terminals at the PCM. Was a problem found?	—	Verify repair	Go to *Step 17*
11	Check for an open RPL driver circuit between the PCM and the RPL. Was a problem found?	—	Verify repair	Go to*Step 18*
12	Substitute a known “good” relay for the PCM mainrelay. Was the malfunction fixed?	—	Verify repair	Go to *Step 13*
13	Repair the open in the ignition feed circuit. Is the action complete?	—	Verify repair	—
14	Locate and repair the open PCM battery feed circuit. Is the action complete?	—	Verify repair	—

Downloaded from www.Manualslib.com manuals search engine

No Reduced Power Lamp (RPL) (Cont'd)

Step	Action	Value(s)	Yes	No
15	Locate and repair the short to ground in the PCM ignition feed circuit or PCM battery feed circuit. Is the action complete?	—	Verify repair	—
16	Locate and repair the short to ground in the ignition feed circuit to the instrument cluster, and replace thefuse. Is the action complete?	—	Verify repair	—
17	Replace the PCM. **IMPORTANT:** The replacement PCM must be programmed. Refer to ON-Vehicle Service in Power Control Module and Sensors for procedures. And also refer to latest Service Bulletin. Check to see if the latest software is released or not. And then Down Load the LATEST PROGRMMED SOFTWARE to the replacement PCM. Is the action complete?	—	Verify repair	—
18	Check the RPL driver circuit for a poor connection at the instrument panel connector. Was a problem found?	—	Verify repair	Go to *Instrument Panel in Electrical Diagnosis*

Downloaded from www.Manualslib.com manuals search engine

Reduced Power Lamp (RPL) “ON” Steady

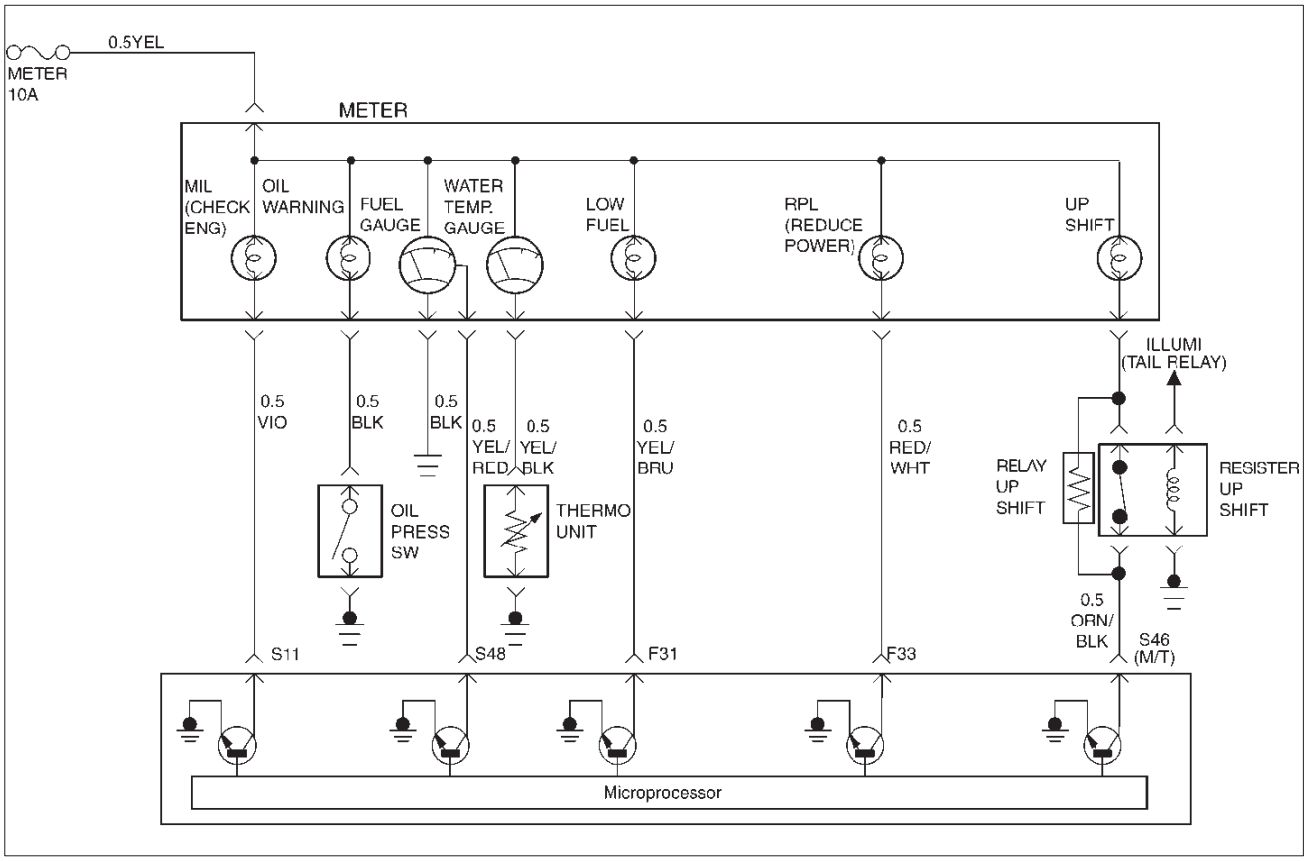

D06RY00127

Circuit Description

The Reduced Power lamp (RPL) should always be illuminated and steady with ignition “ON” and the engine stopped. Ignition feed voltage is supplied directly to the RPL indicator. The powertrain control module (PCM) turns the RPL “ON” by grounding the RPL driver circuit. The RPL should not remain “ON” with the engine running and no DTC(s) set. A steady RPL with the engine running and no DTC(s) suggests a short to ground in the RPL driver circuit.

Diagnostic Aids

An intermittent RPL may be cased by a poor connection, rubbed-through wire insulation, or a wire broken inside the insulation. Check for the following items:

- Poor connection or damaged harness-Inspect the PCM harness and connectors for improper mating, broken locks, improperly formed or damaged terminals, poor terminal-to-wire connection, and damaged harness.

Test Description

Number(s) below refer to the step number(s) on the Diagnostic Chart.

2. If the RPL does not remain “ON” when the PCM is disconnected, the RPL driver wiring is not faulty.
3. If the RPL driver circuit is OK, the instrument panel cluster is faulty.
6. This vehicle is equipped with a PCM which utilizes an electrically erasable programmable read only memory (EEPROM). When the PCM is replaced, the new PCM must be programmed. Refer to*PCM Replacement and Programming Procedures in Powertrain Control Module (PCM) and Sensors.*

Downloaded from www.Manualslib.com manuals search engine

Reduced Power Lamp (RPL) “ON” Steady

Step	Action	Value(s)	Yes	No
1	Was the “ On - Board Diagnostic (OBD) System Check” performed?	—	Go to *Step 2*	Go to *OBD System Check*
2	1. Ignition “OFF,” disconnect PCM. 2. Ignition “ON,” observe the RPL (Reduced Power Lamp). Is the RPL “ ON?”	—	Go to *Step 3*	Go to *Step 5*
3	1. Ignition “OFF,” disconnect the instrument panel cluster. 2. Check the RPL driver circuit between the PCM and the instrument panel cluster for a short to ground. 3. If a problem is found, repair as necessary. Was the RPL driver circuit shorted to ground?	—	Go to *OBD System Check*	Go to *Step 4*
4	Replace the instrument panel cluster. Is the action complete?	—	Go to *OBD System Check*	—
5	1. Ignition “OFF,” reconnect the PCM. 2. Ignition “ON,” reprogram the EEPROM. Refer to *On - Vehicle Service in Powertrain Control Module and Sensors for procedures.* 3. Using the Tech 2 output controls function, select RPL dash lamp control and command the RPL “OFF.” (Refer to*the Miscellaneous test*) Did the MIL turn “OFF”?	—	Go to *OBD System Check*	Go to *Step 6*
6	Replace the PCM. **IMPORTANT:** The replacement PCM must be programmed. Refer to *ON-Vehicle Service in Power Control Module and Sensors for procedures.* And also refer to latest Service Bulletin. Check to see if the latest software is released or not. And then Down Load the LATEST PROGRMMED SOFTWARE to the replasement PCM. Is the action complete?	—	Go to *OBD System Check*	—

Downloaded from www.Manualslib.com manuals search engine

Engine Cranks But Will Not Run

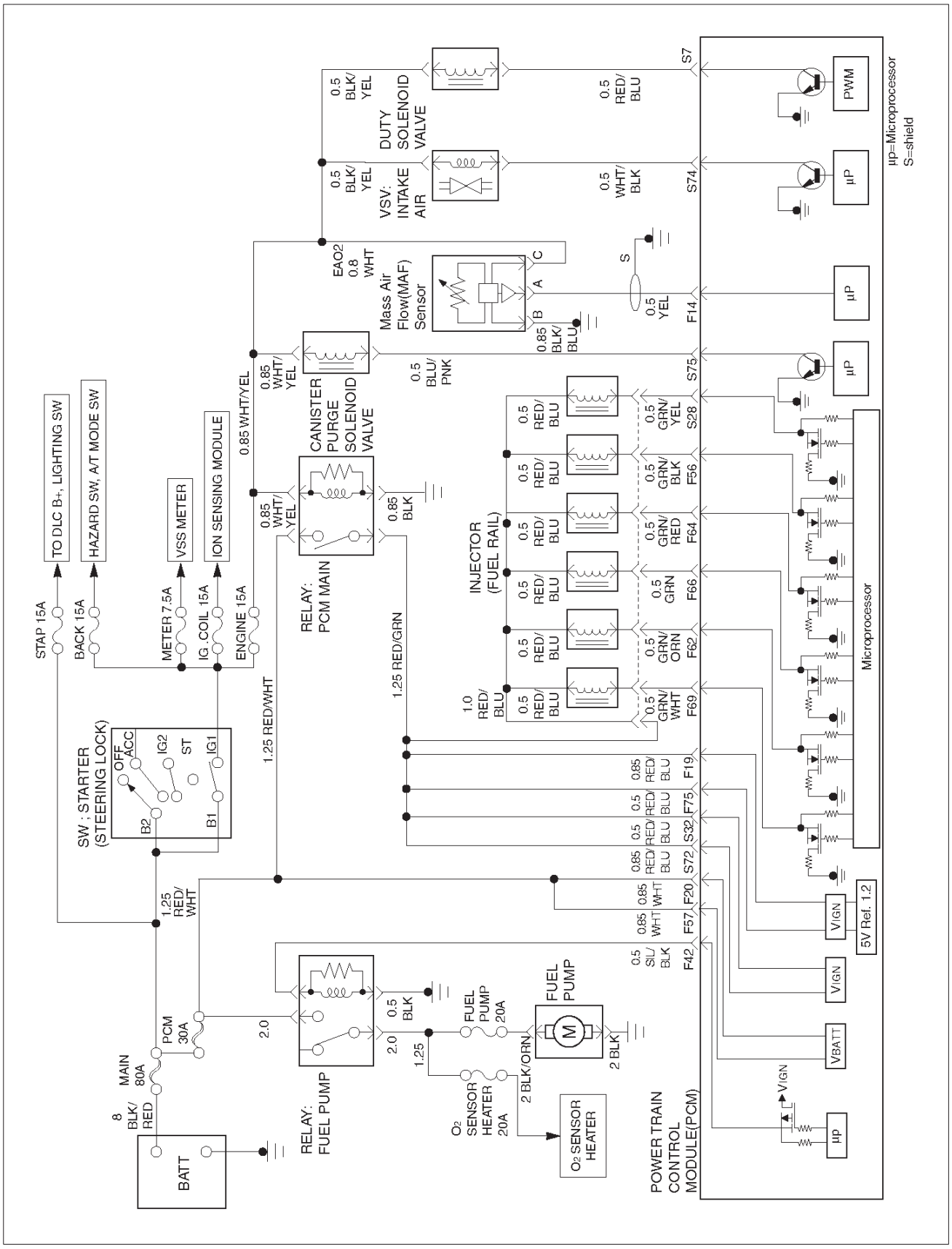

D06RY00150

Downloaded from www.Manualslib.com manuals search engine

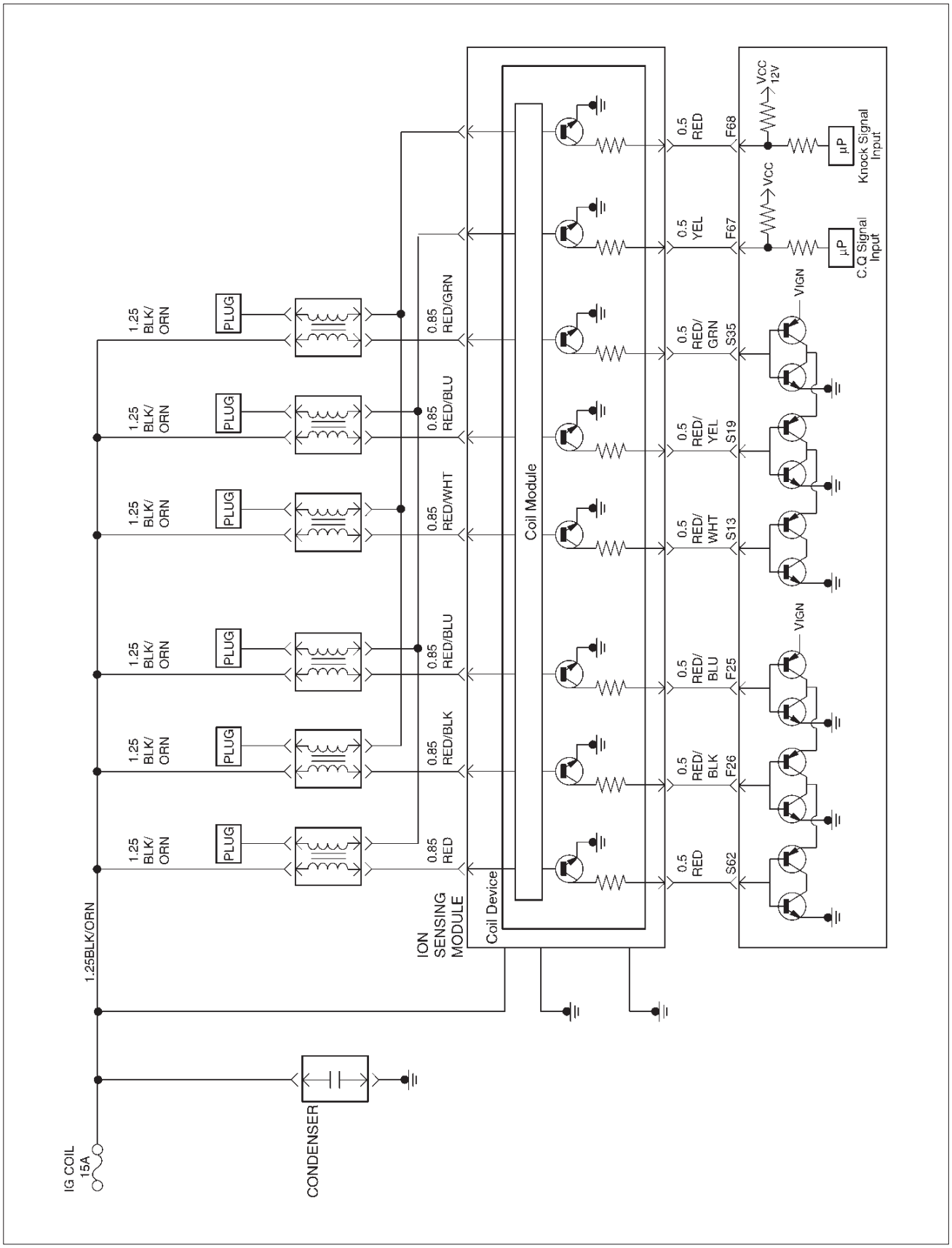

D06RY00042

Downloaded from www.Manualslib.com manuals search engine

Circuit Description

The electronic Ignition system uses a coil -at-plug method of spark distribution. In this type of ignition system, the powertrain control module (PCM) triggers the correct driver outside the Ignition Current Sense System (ICSS), which then triggers the correct ignition coil based on the 58X signal received from the crankshaft position sensor (CKP). The spark plug connected to the coil fires when the ICSS opens the ground circuit for the coil's primary circuit.

During crank, the PCM monitors the CKP 58X signal. The CKP signal is used to determine which cylinder will fire first. After the CKP 58X signal has been processed by the PCM, it will command all six injectors to allow a priming shot of fuel for all the cylinders. After the priming, the injectors are left "OFF" during the next six 58X reference pulses from the CKP. This allows each cylinder a chance to use the fuel from the priming shot. During this waiting been received by the PCM. The CMP signal allows the PCM to operate the injectors sequentially based on camshaft position. If the camshaft position signal is not present at start - up, the PCM will begin sequential fuel delivery with a 1 -in-6 chance that fuel delivery is correct. The engine will run without a CMP signal, but will set a DTC code.

Diagnostic Aids

An intermittent problem may be caused by a poor connection, rubbed - through wire insulation or a wire broken inside the insulation. Check for the following items:

- Poor connection or damaged harness-Inspect the PCM harness and connectors for improper mating, broken locks, improperly formed or damaged terminals, poor terminal-to-wire connection, and damaged harness.
- Faulty engine coolant temperature sensor-Using a Tech 2, compare engine coolant temperature with intake air temperature on a completely cool engine. Engine coolant temperature should be within 10 ˚ C of intake air temperature. If not, replace the ECT sensor.

Test Description

Number(s) below refer to the step number(s) on the Diagnostic Chart.

5. An obvious cause of low fuel pressure would be an empty fuel tank.
6. The engine will easily start and run if a few injectors are disabled. It is not necessary to test all injectors at this time since this step is only a test to verify that all of the injectors have not been disabled by fuel contamination.
7. A blinking test light verifies that the PCM monitoring the 58X crankshaft reference signal and is capable of activating the injectors. If there is an open or shorted driver circuit, DTCs 201 – 206 and a misfire DTC 300 – 306 should be set.
19. By using a spark tester, each ignition coil's ability to produce 25,000 volts is verified.
25. If there is an open or shorted driver circuit, DTCs 201 – 206 and a misfire DTC 301 – 306 should be set. All six injector driver circuits can be checked at one time without removing the intake manifold if a J 39021 – 95 test light is available. This is the alternative procedure:
    - With the ignition "OFF", disconnect the gray connector located at the rear of the air filter, attached to a bracket on the purge canister.
    - Connect test light J 39021 – 95 to the connector. Do any of the light constantly illuminate or fail to blink when the engine is cranked? If so, repair the short or open circuit, or replace the PCM if indicated.

This procedure only tests the driver circuit as far as the test connection, so step 31 is added to test the circuit all the way to the injector.

Engine Cranks But Will Not Run

Step	Action	Value(s)	Yes	No
1	Was the "On-Board Diagnostic (OBD) System Check"performed?	—	Go to *Step 2*	Go to *OBD System Check*
2	Check the ignition coil fuse, the engine fuse, and the PCM fuse. Was a fuse blown?	—	Go to *Step 3*	Go to *Step 4*
3	Check for a short to ground and replace the fuse. Is the action complete?	—	Verify repair	—

Downloaded from www.Manualslib.com manuals search engine

Engine Cranks But Will Not Run (Cont'd)

Step	Action	Value(s)	Yes	No
4	1. Ignition "OFF", install a fuel pressure gauge at the test fitting on the fuel supply line in the engine compartment. (Use a shop cloth to absorb any fuel leakage while making the connection.) 2. Ignition "ON," observe the fuel pressure. Is the fuel pressure within the specified values, and does it hold steady?	285 - 375 kPa (43 – 55 psi)	Go to *Step 6*	Go to *Step 5*
5	Is any fuel pressure indicated?	—	Go to *Fuel System Electrical Test*	Go to *Fuel System Diagnosis*
6	Install the switch box J 39021–2 at the injector test connector and activate an injector. Did the fuel pressure drop when the injector was activated?	—	Go to *Step 7*	Go to *Step 18*
7	Install an injector test light at the #2 cylinder injector harness connector. Does the light blink when the engine is cranked?	—	Go to *Step 8*	Go to *Step 24*
8	1. Ignition " OFF." 2. Disconnect the 11-pin connector at the ION sensing module. 3. With a test light to B + , probe each of the 6 exposed ION sensing module pins, one at a time, while the engine is cranked. (Use the gray narrow Metri - Pak © flexible female connector from the J - 35616 kit to make the pin accessible.) Does the light flash at each pin when the engine is cranked?	—	Go to *Step 12*	Go to *Step 9*
9	1. Remove the 4-pin connector at the ION sensing module. 2. Ignition " ON." 3. Use a test light at the harness connector to verify that the module is being supplied with B + and ground. Was a problem found?	—	Go to *Step 10*	Go to *Step 11*
10	Repair the open ignition feed circuit or ground circuit to the ION sensing module. Is the action complete?	—	Verify repair	—
11	Repair the ION sensing module. Is the action complete?	—	Verify repair	—
12	1. Reconnect the ION sensing module 11-pin connector. 2. Remove the electrical connector from each coil. 3. With a test light to B+, probe each of the coil connectors at the wire which runs to the ION sensing module. Does the light flash at each coil connector when the engine is cranked?	—	Go to *Step 14*	Go to *Step 13*
13	Check for an open circuit between the coil and ION sensing module. Is the action complete?	—	Verify repair	—

Downloaded from www.Manualslib.com manuals search engine

Engine Cranks But Will Not Run (Cont'd)

Step	Action	Value(s)	Yes	No
14	1. Ignition "ON." 2. While the coil connectors are disconnected, touch each coil connector's ignition feed terminal with a grounded test light (the ignition feed wire is black with orange tracer). Did the test light illuminate?	—	Go to *Step 16*	Go to *Step 15*
15	Repair the open ignition feed circuit. Is the action complete?	—	Verify repair	—
16	While the coil connectors are disconnected, touch each connector's secondary ground terminal with a test light to B +. (The ground wires are black.) Did the test light illuminate at each coil connector?	—	Go to *Step 18*	Go to *Step 17*
17	Repair the open secondary ground circuit. Is the action complete?	—	Verify repair	—
18	1. Test the fuel for contamination. 2. If a problem is found, clean the fuel system and correct the contaminated fuel condition as necessary. Replace the fuel filter and replace any injectors that are not delivering fuel (see Injector Balance Test). Was a problem found?	—	Verify repair	Go to *Step 19*
19	1. Remove any ignition coil and install a spark tester at the spark plug end of the coil. 2. Observe the tester while the engine is cranking. Was a crisp, blue spark observed? Only one or two sparks followed by no result is considered the same as "No Spark."	—	Go to *Step 21*	Go to *Step 20*
20	Replace the ignition coil, and return to Step 19 to test the remaining coils. Is the action complete?	—	Verify repair	—
21	Repeat Step 19 for each coil. Remove only one coil at a time, and reinstall each coil on its spark plug after testing, but do not refasten coils with screws at this time. After all coils have passed the spark test, does the engine start?	—	Refasten all coils with their screws	Go to *Step 22*
22	1. Remove the spark plugs from all cylinders. 2. Visually inspect the spark plug electrodes. 3. Replace any spark plugs with loose or missing electrodes or cracked insulators. Did your inspection reveal any spark plugs exhibiting excessive fouling?	—	Correct the fouling condition	Go to *Step 23*

Downloaded from www.Manualslib.com manuals search engine

Engine Cranks But Will Not Run (Cont'd)

Step	Action	Value(s)	Yes	No
23	Refer to *Engine Mechanical Diagnosis* to diagnose the following conditions: ● Faulty or incorrect camshaft drive belts ● Leaking or sticky valves or rings ● Excessive valve deposits ● Loose or worn rocker arms ● Weak valve springs ● Incorrect valve timing ● Leaking head gasket Is the action complete?	—	Verify repair	Go to *Step 25*
24	Observe the "Engine Speed" data display on the Tech 2 while cranking the engine. Is the engine RPM indicated?	—	Go to *Step 25*	Go to *Step 34*
25	1. Disconnect the 7-pin gray connector at the rear of the air filter beneath the point where the air duct attaches to the MAF sensor. 2. Ignition "ON." 3. Using a test light connected to ground, probe the ignition terminal at the PCM (female) side of the 7-pin connector. Is the test light "ON?"	—	Go to *Step 26*	Go to *Step 32*
26	1. At the PCM (female) side of the connector, connect a test light between the ignition + terminal and one of the injector driver circuits at the same connector. 2. Ignition "ON." 3. Observe the test light, and repeat the test for each injector driver circuit. Did the test light stay on when checking any of the 6 injector driver circuits?	—	Go to *Step 27*	Go to *Step 29*
27	1. Ignition "OFF," disconnect the PCM. 2. Ignition "ON," observe the test light. Is the test light "ON?"	—	Go to *Step 28*	Go to *Step 33*
28	Locate and repair the short to ground in the injectordriver circuit. Is the action complete?	—	Verify repair	—
29	1. Using the same test location as in step 26, connect a test light between the ignition terminal and one of the driver circuits. 2. Crank the engine and observe the test light. 3. Repeat for each injector driver circuit. Did the light blink during the test for each circuit?	—	Go to *Step 31*	Go to *Step 30*
30	Check for an open injector driver circuit. Was a problem found?	—	Verify repair	Go to *Step 33*

Downloaded from www.Manualslib.com manuals search engine

Engine Cranks But Will Not Run (Cont'd)

Step	Action	Value(s)	Yes	No
31	1. At the injector (male) side of the gray connector mentioned in step 25, connect an ohmmeter between the ignition pin and one of the driver circuit pins. 2. Check for continuity in the circuit. 3. Repeat for each injector circuit. The readings should be approximately equal to the specified value for injector resistance. Was a problem found?	12.5 μ	Verify repair	Go to *Step 8*
32	Repair the ignition feed circuit. Is the action complete?	—	Verify repair	—
33	Replace the PCM. **IMPORTANT:** The replacement PCM must be programmed. Refer to *ON-Vehicle Service in Power Control Module and Sensors for procedures.* And also refer to latest Service Bulletin. Check to see if the latest software is released or not. And then Down Load the LATEST PROGRMMED SOFTWARE to the replacement PCM. Is the action complete?	—	Verify repair	—
34	1. Raise the vehicle and disconnect the CKP sensor harness. 2. Ignition "ON." 3. With a test light to ground, probe the harness ignition feed terminal. Did the light illuminate?	—	Go to *Step 36*	Go to *Step 35*
35	Check the ignition feed wire between the sensor andthe PCM for a short to ground or open circuit. Is the action complete?	—	Verify repair	—
36	1. Ignition "ON." 2. At the CKP harness connector, connect a test light between the ignition and ground terminals. Did the light illuminate?	—	Go to *Step 38*	Go to *Step 37*
37	Check the sensor ground circuit for an open or short to voltage. Is the action complete?	—	Verify repair	—
38	Check the signal circuit between the sensor and the PCM for a short to ground, short to voltage, or an open. Was a problem found?	—	Verify repair	Go to *Step 39*
39	Replace the CKP position sensor. Is the action complete?	—	Verify repair	Go to *Step 33*

Downloaded from www.Manualslib.com manuals search engine

Fuel System Electrical Test

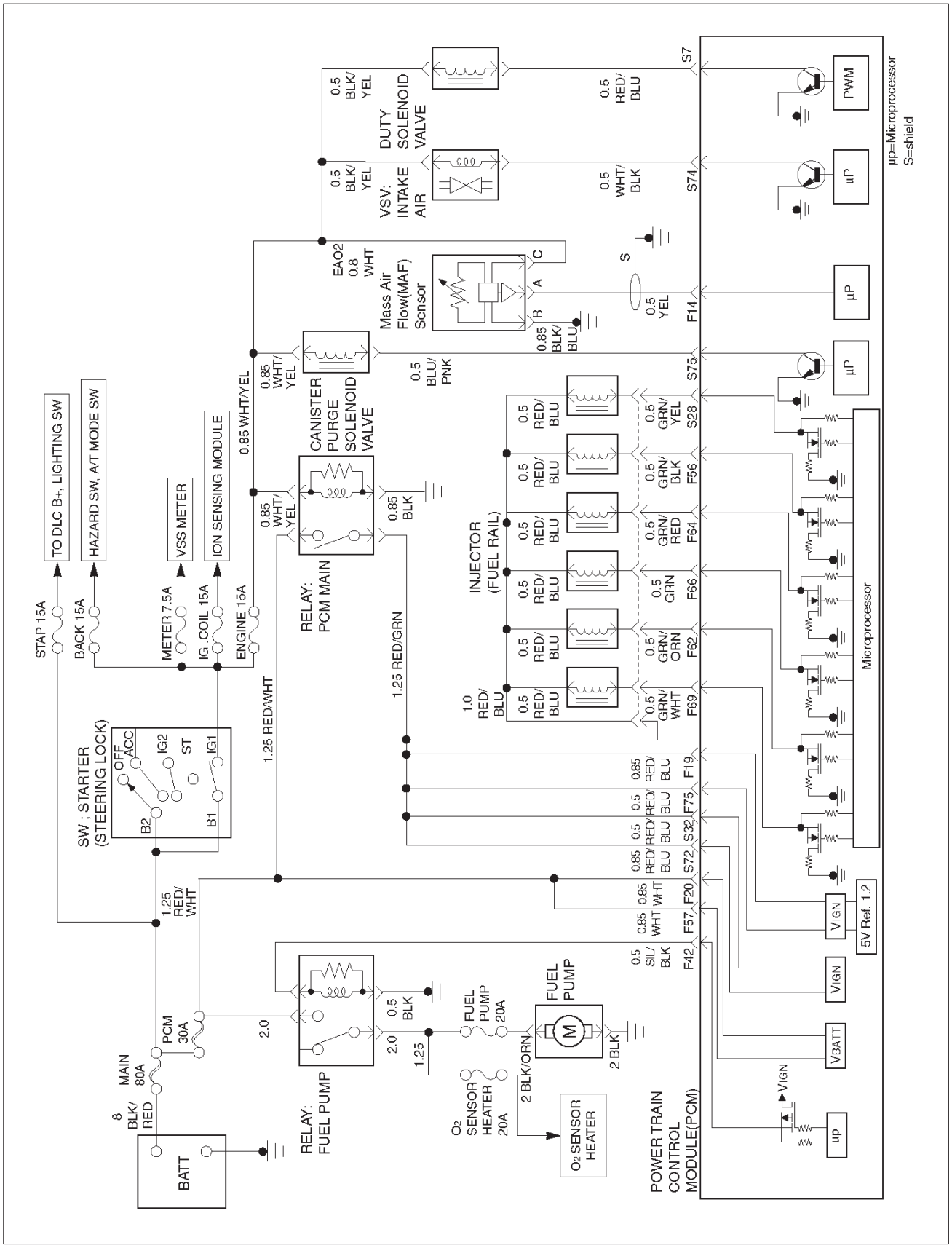

D06RY00150

Downloaded from www.Manualslib.com manuals search engine

Circuit Description

When the ignition switch is first turned “ON,” the powertrain control module (PCM) energizes the fuel pump relay which applies power to the in-tank fuel pump. The fuel pump relay will remain “ON” as long as the engine is running or cranking and the PCM is receiving 58X crankshaft position pulses. If no 58X crankshaft position pulses are present, the PCM de-energizes the fuel pump relay within 2 seconds after the ignition is turned “ON” or the engine is stopped.

The fuel pump delivers fuel to the fuel rail and injectors, then to the fuel pressure regulator. The fuel pressure regulator controls fuel pressure by allowing excess fuel to be returned to the fuel tank. With the engine stopped and ignition “ON,” the fuel pump can be turned “ON” by using a command by the Tech 2.

Diagnostic Aids

An intermittent may be caused by a poor connection, rubbed-through wire insulation, or a wire broken inside the insulation. Check for the following items:

- Poor connection or damaged harness – Inspect the PCM harness and connectors for improper mating, broken locks, improperly formed or damaged terminals, poor terminal-to-wire connection, and damaged harness.

Test Description

Number(s) below refer to the step number(s) on the Diagnostic Chart.

2. If the fuel pump is operating but incorrect pressure is noted, the fuel pump wiring is OK and the “Fuel System Pressure Test” chart should be used for diagnosis.

CAUTION: To reduce the risk of fire and personal injury:

- **It is necessary to relieve fuel system pressure before connecting a fuel pressure gauge. Refer to Fuel Pressure Relief Procedure, below.**
- **A small amount of fuel may be released when disconnecting the fuel lines. Cover fuel line fittings with a shop towel before disconnecting, to catch any fuel that may leak out. Place the towel in an approved container when the procedure is completed.**

Fuel Pressure Relief Procedure

1. Remove the fuel cap.
2. Remove the fuel pump relay from the underhood relay center.
3. Start the engine and allow it to stall.
4. Crank the engine for an additional 3 seconds.

Fuel Gauge Installation

1. Remove the shoulder fitting cap.
2. Install fuel gauge J 34730-1 to the fuel feed line located in front of and above the right side valve train cover .
3. Reinstall the fuel pump relay.

Downloaded from www.Manualslib.com manuals search engine

Fuel System Electrical Test

Step	Action	Value(s)	Yes	No
1	Was the “On-Board Diagnostic (OBD) System Check” performed?	—	Go to *Step 2*	Go to *OBD System Check*
2	1. Read the “Caution” above. 2. Relieve the fuel system pressure and install the fuel pump pressure gauge to the test fitting. 3. Ignition ON, Engine is Off. 4. Use a Tech 2 to command the fuel pump “ON.” (Refer to the Miscellaneous Test.) Is there an immediate pressure build-up which indicates the pump is running?	—	Go to *Step 3*	Go to *Step 4*
3	1. Verify that the pump is not running by removing the fuel filler cap and listening. 2. Command the pump “ON” with the Tech 2. Did the pump turn “OFF” after 2 seconds?	—	Test completed	Go to *Step 12*
4	1. Ignition “OFF.” 2. Remove the fuel pump relay. 3. Using a test light connected to ground, probe the battery feed to the relay. Did the light illuminate?	—	Go to *Step 6*	Go to *Step 5*
5	Repair short or open battery feed to fuel pump relay. Is the action complete?	—	Verify repair	—
6	1. Connect a test light between the two wires that connect to the fuel pump relay pull-in coil. 2. Ignition “ON.” Did the test light illuminate for 2 seconds and then turn off?	—	Go to *Step 12*	Go to *Step 7*
7	1. With a test light connected to battery (–), probe the fuel pump relay connector at the wire which runs from the relay pull-in coil to the PCM. 2. Ignition “ON.” Did the test light illuminate for 2 seconds and then turn off?	—	Go to *Step 8*	Go to *Step 9*
8	Locate and repair open in the fuel pump relay ground circuit. Is the action complete?	—	Verify repair	—
9	Check for short or open between the PCM and the fuel pump relay. Was a problem found?	—	Verify repair	Go to *Step 10*
10	1. Check the fuel pump relay circuit for a poor terminal connection at the PCM. 2. If a problem is found, replace terminal as necessary. Was a problem found?	—	Verify repair	Go to *Step 11*

Downloaded from www.Manualslib.com manuals search engine

Fuel System Electrical Test (Cont'd)

Step	Action	Value(s)	Yes	No
11	Replace the PCM. **IMPORTANT:** The replacement PCM must be programmed. Refer to *On-Vehicle Service* in *Powertrain Control Module and Sensors for procedures.* And also refer to latest Service Bulletin. Check to see if the Latest software is released or not. And then Down Load the LATEST PROGRAMMED SOFTWARE to the replacement PCM. Is the action complete?	—	Verify repair	—
12	1. Reconnect the fuel pump relay. 2. Disconnect the fuel pump electrical connector at the fuel tank. 3. Using a test light connected to ground, probe the fuel pump feed wire (harness side). 4. Command the fuel pump "ON" with a Tech 2. Did the light illuminate for 2 seconds?	—	Go to *Step 15*	Go to *Step 13*
13	1. Honk the horn to verify that the horn relay is functioning. 2. Substitute the horn relay for the fuel pump relay. 3. Leave the test light connected as in step 12. 4. Command the fuel pump "ON" with the Tech 2. Did the test light illuminate for 2 seconds when the fuel pump was commanded "ON?"	—	Go to *Step 17*	Go to *Step 14*
14	1. Re-connect the horn relay in its proper location. 2. Check for a short circuit, blown fuse or open circuit between the relay and the fuel tank. Is the action complete?	—	Verify repair	—
15	1. With the fuel pump electrical connector at the fuel tank disconnected, connect a test light between the feed wire and the ground wire (harness side). 2. Command the fuel pump "ON" with a Tech 2. Did the test light illuminate for 2 seconds?	—	Go to *Step 18*	Go to *Step 16*
16	Repair the open circuit in the fuel pump ground wire. Is the action complete?	—	Verify repair	—
17	1. Re-connect the horn relay in its proper location. 2. Replace the fuel pump relay. Is the action complete?	—	Verify repair	—
18	Replace the fuel pump. Is the action complete?	—	Verify repair	—

Downloaded from www.Manualslib.com manuals search engine

Electric Throttle Control (ETC) System Check

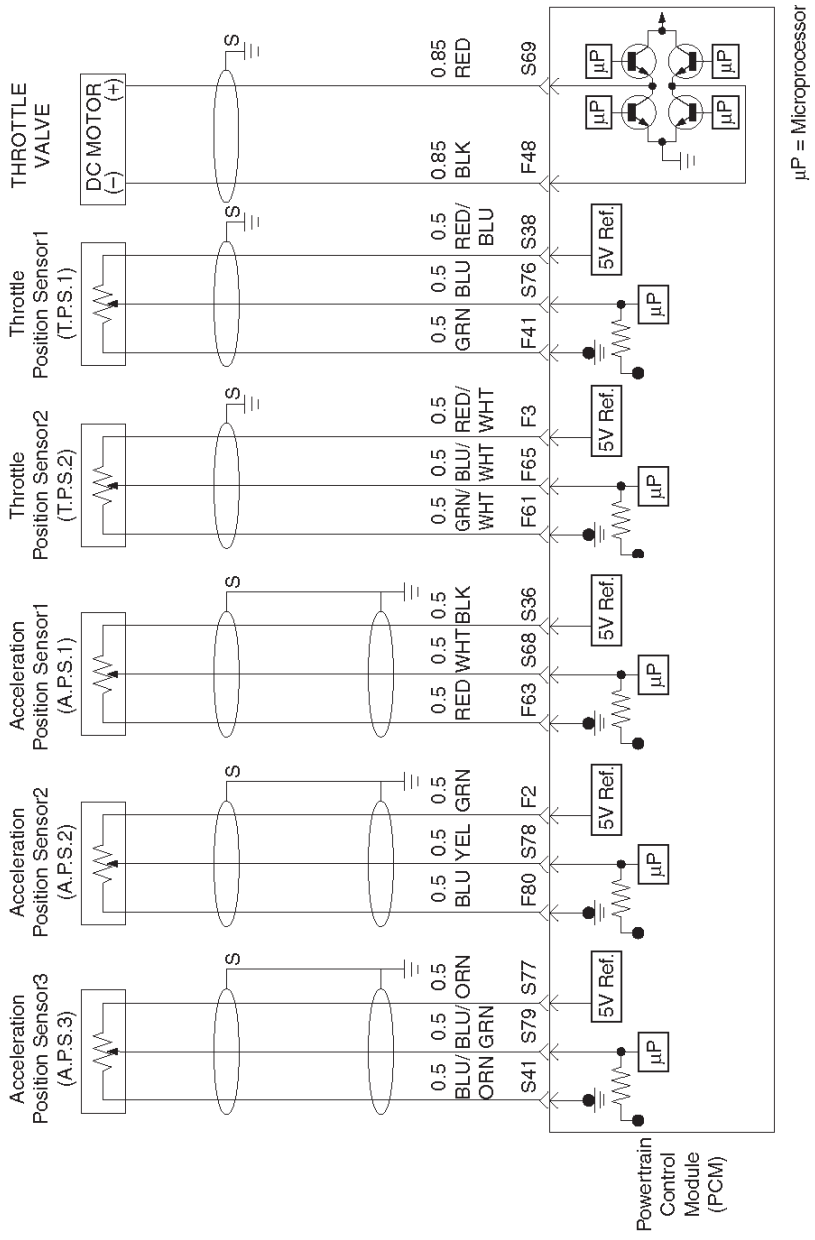

D06RY00179

Downloaded from www.Manualslib.com manuals search engine

Circuit Description

- The powertrain control module (PCM) controls engine speed by adjusting the position of the throttle control valve (DC motor). The throttle motor is a DC motor driven by one coil. The PCM applies current to the DC motor coil in PWM (%) to adjust the throttle valve into a passage in the throttle body to allow air flow. This method allows highly accurate control of engine speed and quick response to changes in engine load.
- The acceleration position (AP1) sensor circuit provides a voltage signal relative to acceleration pedal angle.

  The acceleration pedal angle will vary about 13% at idle position to about 87% at wide open throttle(WOT).

  APS signal is used to determine which DC motor will adjust throttle position.

  After the APS signal has been processed by the PCM, it will command DC motor to allow movement of throttle position.

Diagnostic Aids

- An intermittent may be caused by a poor connection, rubbed-through wire insulation or a wire broken inside the insulation. Check for poor connections or a damaged harness. Inspect the PCM harness and connector for improper mating, broken locks, improperly formed or damaged terminals, poor terminal-to-wire connection, and damaged harness.
- Throttle body – Check for objects blocking the DC motor or throttle bore, excessive deposits in the ETC passage and on the valve spring, and excessive deposits in the throttle bore and on the throttle valve plate.
- Acceleration pedal – Check for objects blocking the AP sensor or pedal arm with spring, and excessive deposits in the acceleration pedal arm and on the acceleration pedal.

Test Description

Number(s) below refer to the step number(s) on the Diagnostic Chart:

2. Visually/physically inspect for the following throttle valve conditions.
3. Visually/physically inspect for the following acceleration pedal conditions.
5. Check the following circuits for throttle valve and DC moter. Check the following TP sensor resistance and DC motor.
7. Check the following circuits for acceleration pedal. Check the following AP sensor resistance.
10. Following DTC: Software detect Error for ETC system.
11. Following DTC: Software detect Error for ETC system.

Downloaded from www.Manualslib.com manuals search engine

Electric Throttle Control (ETC) System Check

Step	Action	Value(s)	Yes	No
1	Was the “On-Board Diagnostic (OBD) System Check” performed?	—	Go to *Step 2*	Go to *OBD System Check*
2	Visually/physically inspect for the following conditions: ● Throttle body tampering. ● Restricted intake throttle system. Check for a possible collapsed air intake duct, restricted air filter element, or foreign objects blocking the air intake system. ● Throttle body: Check for objects blocking the throttle passage or throttle bore, excessive deposits in the throttle passage and on the throttle valve, and excessive deposits in the throttle bore and on the throttle plate. ● Throttle body with lever: When check for objects to send round the throttle spring lever that lever is smooth movement by less than 9 l·bm{1.0 N·m}, and spring lever has not excessive play. ● Throttle function: Check for the throttle function. When ignition switch “ON” that throttle lever is smooth operated by step on the acceleration pedal. Did any of the above require a repair?	—	Refer to *appropriate section for on-vehicle service*	Go to *Step 3*
3	Visually/physically inspect for the following conditions: ● Acceleration pedal tampering. ● Acceleration pedal : Check for objects blocking the spring or pedal arm. ● Acceleration pedal : For check for objects to move the acceleration pedal that pedal is smooth movement, and acceleration pedal arm has not excessive play. Did any of the above require a repair?	—	Refer to *appropriate section for on-vehicle service*	Go to *Step 4*
4	1. Check for a poor connection at the throttle body harness connector. 2. Check for a poor connection at the acceleration position sensor harness connector. 3. If a problem is found, replace faulty terminals as necessary. Was a problem found?	—	Verify repair	Go to *Step 5*
5	Check the following circuits for an open, short to voltage, short to ground, or poor connection at the PCM: ● Throttle position sensor 1 circuit. ● Throttle position sensor 2 circuit. ● Throttle DC motor circuit. ● Throttle position sensor resistance. ● Throttle DC motor resistance. If a problem is found, repair as necessary. Was a problem found?	Vcc–GND 1–7kμ SIG–GND change resistance 0.3–100μ	Verify repair	Go to *Step 6*

Downloaded from www.Manualslib.com manuals search engine

Electric Throttle Control (ETC) System Check (Cont'd)

Step	Action	Value(s)	Yes	No
6	1. Install the Tech 2 2. Ignition "ON" but not engine run. 3. Chech the valve for APS and TPS. Was the prblem found?	Idle AP1 = 11–13% AP2 = 87–88% AP3 = 87–88% TP1 = 3–13% TP2 = 87–97% WOT AP1 = 85–89% AP2 = 11–15% AP3 = 32–36% TP1 = 87–97% TP2 = 3–13%	Go to *Step 10*	Go to *Step 7*
7	Replace the throttle valve. Is the action complete?	—	Go to *Step 3*	—
8	Check the following circuits for an open, short to voltage, short to ground, or poor connection at the PCM: ● Acceleration position sensor 1 circuit. ● Acceleration position sensor 2 circuit. ● Acceleration position sensor 3 circuit. ● Acceleration position sensor resistance. If a problem is found, repair as necessary. Was a problem found?	Vcc–GND 4–6kμ SIG–GND change resistance	Verify repair	Go to *Step 9*
9	Replace the acceleration position sensor. Is the action complete?	—	Go to *Step 10*	–
10	Following below the DTCs stored: P1125, P1290, P1295, P1299	—	Go to *applicable DTC table*	Go to *Step 11*
11	Following below the DTCs stored: P1514, P1515, P1516, P1523, P1271, P1272, P1273	—	Go to *applicable DTC table*	Go to *Step 12*
12	Replace the PCM. **IMPORTANT:** The replacement PCM must be programmed. Refer to *On-Vehicle Service* in *Powertrain Control Module and Sensors for procedures.* And also refer to latest Service Bulletin. Check to see if the Latest software is released or not. And then Down Load the LATEST PROGRAMMED SOFTWARE to the replacement PCM. Is the action complete?	—	Verify repair	—

Downloaded from www.Manualslib.com manuals search engine

Fuel System Diagnosis

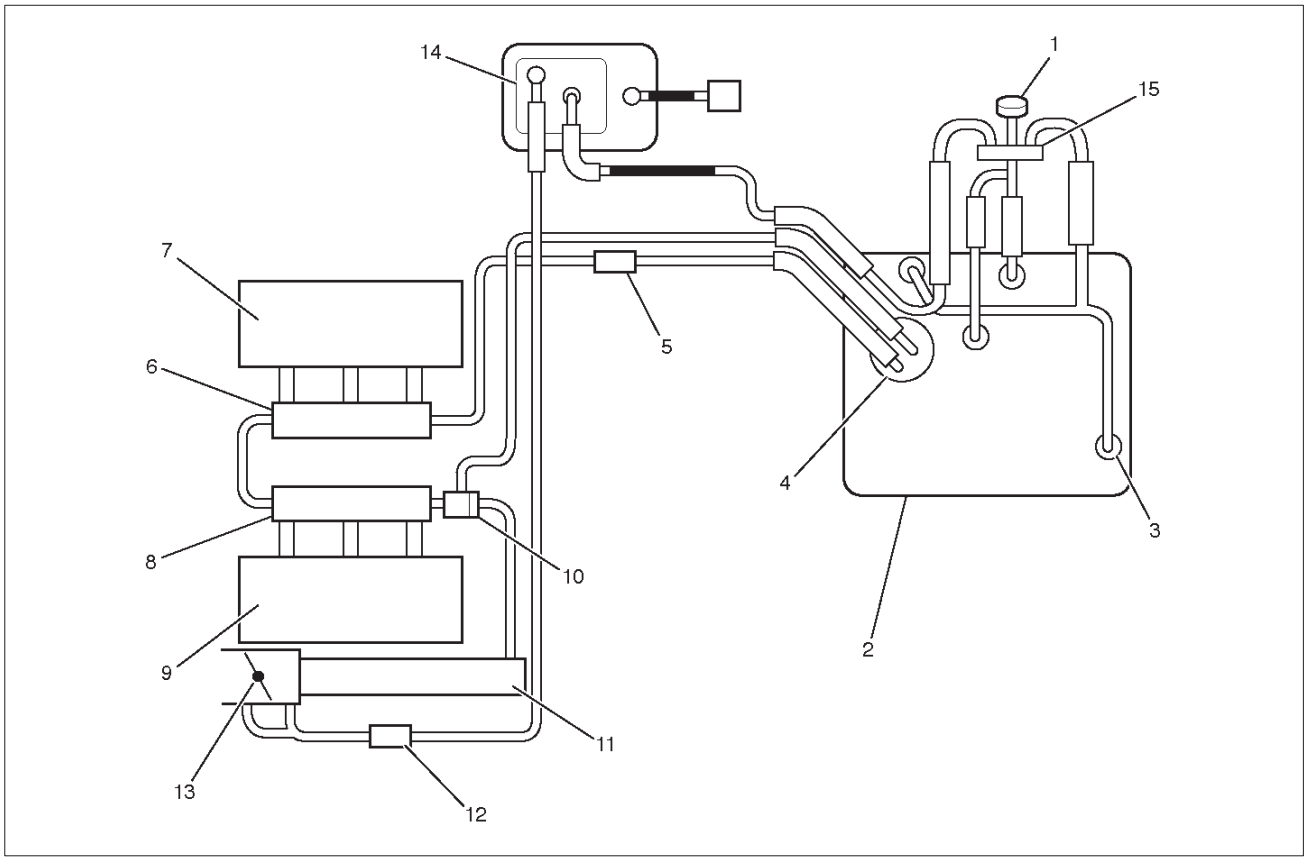

140RW020

Legend

(1) Fuel Filler Cap
(2) Fuel Tank
(3) Rollover Valve
(4) Fuel Pump and Sender Assembly
(5) Fuel Filter
(6) Fuel Rail Right
(7) Right Bank
(8) Fuel Rail Left
(9) Left Bank
(10) Fuel Pressure Control Valve
(11) Common Chamber
(12) Duty Solenoid Valve
(13) Throttle Valve
(14) Canister
(15) Evap Shut Off Valve

Circuit Description

When the ignition switch is turned "ON," the powertrain control module (PCM) will turn "ON" the in-tank fuel pump. The in-tank fuel pump will remain "ON" as long as the engine is cranking or running and the PCM is receiving 58X crankshaft position pulses. If there are no 58X crankshaft position pulses, the PCM will turn the in-tank fuel pump "OFF" 2 seconds after the ignition switch is turned "ON" or 2 seconds after the engine stops running. The in-tank fuel pump is an electric pump within an integral reservoir. The in-tank fuel pump supplies fuel through an in-line fuel filter to the fuel rail assembly. The fuel pump is designed to provide fuel at a pressure above the pressure needed by the fuel injectors. A fuel pressure regulator, attached to the fuel rail, keeps the fuel available to the fuel injectors at a regulated pressure. Unused fuel is returned to the fuel tank by a separate fuel return line.

Test Description

Number(s) below refer to the step number(s) on the Diagnostic Chart.

2. Connect the fuel pressure gauge to the fuel feed line as shown in the fuel system illustration. Wrap a shop towel around the fuel pressure connection in order to absorb any fuel leakage that may occur when installing the fuel pressure gauge. With the ignition switch "ON" and the fuel pump running, the fuel pressure indicated by the fuel pressure gauge should be 333-376 kPa (48-55 psi). This pressure is controlled by the amount of pressure the spring inside the fuel pressure regulator can provide.
3. A fuel system that cannot maintain a constant fuel pressure has a leak in one or more of the following areas:
   - The fuel pump check valve.
   - The fuel pump flex line.

Downloaded from www.Manualslib.com manuals search engine

- The valve or valve seat within the fuel pressure regulator.
- The fuel injector(s).

4. Fuel pressure that drops off during acceleration, cruise, or hard cornering may case a lean condition. A lean condition can cause a loss of power, surging, or misfire. A lean condition can be diagnosed using a Tech 2. If an extremely lean condition occurs, the oxygen sensor(s) will stop toggling. The oxygen sensor output voltage(s) will drop below 500 mV. Also, the fuel injector pulse width will increase.

IMPORTANT: Make sure the fuel system is not operating in the "Fuel Cut-Off Mode."

When the engine is at idle, the manifold pressure is low (high vacuum). This low pressure (high vacuum) is applied to the fuel pressure regulator diaphragm. The low pressure (high vacuum) will offset the pressure being applied to the fuel pressure regulator diaphragm by the spring inside the fuel pressure regulator. When this happens, the result is lower fuel pressure. The fuel pressure at idle will vary slightly as the barometric pressure changes, but the fuel pressure at idle should always be less than the fuel pressure noted in step 2 with the engine "OFF."

16. Check the spark plug associated with a particular fuel injector for fouling or saturation in order to determine if that particular fuel injector is leaking. If checking the spark plug associated with a particular fuel injector for fouling or saturation does not determine that a particular fuel injector is leaking, use the following procedure:
    - Remove the fuel rail, but leave the fuel lines and injectors connected to the fuel rail. Refer to *Fuel Rail Assembly* in *On-Vehicle Service.*
    - Lift the fuel rail just enough to leave the fuel injector nozzles in the fuel injector ports.

CAUTION: In order to reduce the risk of fire and personal injury that may result from fuel spraying on the engine, verify that the fuel rail is positioned over the fuel injector ports and verify that the fuel injector retaining clips are intact.

- **Pressurize the fuel system by connecting a 10 amp fused jumper between B+ and the fuel pump relay connector.**
- **Visually and physically inspect the fuel injector nozzles for leaks.**

17. A rich condition may result from the fuel pressure being above 376 kPa (55 psi). A rich condition may cause a DTC P0132 or a DTC P0172 to set. Driveability conditions associated with rich conditions can include hard starting (followed by black smoke) and a strong sulfur smell in the exhaust.
20. This test determines if the high fuel pressure is due to a restricted fuel return line or if the high fuel pressure is due to a faulty fuel pressure regulator.
21. A lean condition may result from fuel pressure below 333 kPa (48 psi). A lean condition may cause a DTC P0131 or a DTC P0171 to set. Driveability conditions associated with lean conditions can include hard starting (when the engine is cold), hesitation, poor driveability, lack of power, surging , and misfiring.
22. Restricting the fuel return line causes the fuel pressure to rise above the regulated fuel pressure. Command the fuel pump "ON" with the Tech 2. The fuel pressure should rise above 376 kPa (55 psi) as the fuel return line becomes partially closed.

NOTE: Do not allow the fuel pressure to exceed 414 kPa (60 psi). Fuel pressure in excess of 414 kPa (60 psi) may damage the fuel pressure regulator.

CAUTION: To reduce the risk of fire and personal injury:

- **It is necessary to relieve fuel system pressure before connecting a fuel pressure gauge. Refer to Fuel Pressure Relief Procedure, below.**
- **A small amount of fuel may be released when disconnecting the fuel lines. Cover fuel line fittings with a shop towel before disconnecting, to catch any fuel that may leak out. Place the towel in an approved container when the procedure is completed.**

Fuel Pressure Relief Procedure

1. Remove the fuel cap.
2. Remove the fuel pump relay from the underhood relay center.
3. Start the engine and allow it to stall.
4. Crank the engine for an additional 3 seconds.

Fuel Gauge Installation

1. Remove the shoulder fitting cap.
2. Install fuel gauge J 34730-1 to the fuel feed line located in front of and above the right side valve train cover.
3. Reinstall the fuel pump relay.

Downloaded from www.Manualslib.com manuals search engine

Fuel System Diagnosis

Step	Action	Value(s)	Yes	No
1	Was the “On-Board Diagnostic (OBD) System Check” performed?	—	Go to *Step 2*	Go to *OBD System Check*
2	1. Turn the ignition “OFF.” 2. Turn the air conditioning system “OFF.” 3. Relieve fuel system pressure and install the fuel pressure gauge. 4. Turn the ignition “ON.” NOTE: The fuel pump will run for approximately 2 seconds. Use the Tech 2 to command the fuel pump “ON”. (Refer to the Miscellaneous Test.) 5. Observe the fuel pressure indicated by the fuel pressure gauge with the fuel pump running. Is the fuel pressure within the specified limits?	290-376 kPa (42-55 psi)	Go to *Step 3*	Go to *Step 17*
3	NOTE: The fuel pressure will drop when the fuel pump stops running, then it should stabilize and remain constant. Does the fuel pressure indicated by the fuel pressure gauge remain constant?	—	Go to *Step 4*	Go to *Step 12*
4	1. When the vehicle is at normal operation temperature, turn the ignition “ON” to build fuel pressure and observe the measurement on the gauge. 2. Start the engine and observe the fuel pressure gauge. Did the reading drop by the amount specified after the engine was started?	21-105 kPa (3-15 psi)	Go to *Step 5*	Go to *Step 9*
5	Is fuel pressure dropping off during acceleration, cruise, or hard cornering?	—	Go to *Step 6*	Check for improper fuel
6	Visually and physically inspect the following items for a restriction: ● The in-pipe fuel filter. ● The fuel feed line. Was a restriction found?	—	Verify repair	Go to *Step 7*
7	Remove the fuel tank and visually and physically inspect the following items: ● The fuel pump strainer for a restriction. ● The fuel line for a leak. ● Verify that the correct fuel pump is in the vehicle. Was a problem found in any of these areas?	—	Verify repair	Go to *Step 8*
8	Replace the fuel pump. Is the action complete?	—	Verify repair	—
9	1. Disconnect the vacuum hose from the fuel pressure regulator. 2. With the engine idling, apply 12-14 inches of vacuum to the fuel pressure regulator. Does the fuel pressure indicated by the fuel pressure gauge drop by the amount specified?	21-105 kPa (3-15 psi)	Go to *Step 10*	Go to *Step 11*

Downloaded from www.Manualslib.com manuals search engine

Fuel System Diagnosis (Cont'd)

Step	Action	Value(s)	Yes	No
10	Locate and repair the loss of vacuum to the fuel pressure regulator. Is the action complete?	—	Verify repair	—
11	Replace the fuel pressure regulator. Is the action complete?	—	Verify repair	—
12	1. Run the fuel pump with the Tech 2. 2. After pressure has built up, turn off the pump and clamp the supply hose shut with suitable locking pliers which will not damage the hose. Does the fuel pressure indicated by the fuel pressure gauge remain constant?	—	Go to *Step 13*	Go to *Step 15*
13	Visually inspect the fuel supply line and repair any leaks. Was a problem found?	—	Verify repair	Go to *Step 14*
14	Remove the fuel tank and inspect for leaky hose or in-tank fuel line. Was a problem found?	—	Verify repair	Go to *Step 8*
15	1. If the pliers are still clamped to the fuel supply hose, remove the locking pliers. 2. With suitable locking pliers, which will not damage the hose, clamp the fuel return line to prevent fuel from returning to the fuel tank. 3. Run the fuel pump with the Tech 2. 4. After pressure has built up, remove power to the pump. Does the fuel pressure indicated by the fuel pressure gauge remain constant?	—	Go to *Step 11*	Go to *Step 16*
16	Locate and replace any leaking fuel injector(s). Is the action complete?	—	Verify repair	—
17	Is the fuel pressure indicated by the fuel pressure gauge above the specified limit?	376 kPa (55 psi)	Go to *Step 18*	Go to *Step 21*
18	1. Relieve the fuel pressure. Refer to the *Fuel Pressure Relief.* 2. Disconnect the fuel return line from the fuel rail. 3. Attach a length of flexible hose to the fuel rail return outlet passage. 4. Place the open end of the flexible hose into an approved gasoline container. 5. Run the fuel pump with the Tech 2. 6. Observe the fuel pressure indicated by the fuel pressure gauge with the fuel pump running. Is the fuel pressure within the specified limits?	290-376 kPa (42-55 psi)	Go to *Step 19*	Go to *Step 20*
19	Locate and correct the restriction in the fuel return line. Is the action complete?	—	Verify repair	—
20	Visually and physically inspect the fuel rail outlet passages for a restriction. Was a restriction found?	—	Verify repair	Go to *Step 11*

Downloaded from www.Manualslib.com manuals search engine

Fuel System Diagnosis (Cont'd)

Step	Action	Value(s)	Yes	No
21	Is the fuel pressure indicated by the fuel pressure gauge above the specified value?	0 kPa (0 psi)	Go to *Step 22*	Go to *Step 23*
22	1. Command the fuel pump "ON" with the Tech 2. 2. Using suitable pliers which will not damage the fuel hose, gradually apply pressure with the pliers to pinch the flexible fuel return hose closed. **CAUTION: Do not let the fuel pressure exceed the second specified value.** Does the fuel pressure indicated by the fuel pressure gauge rise above the first specified value?	376 kPa (55 psi) 414 kPa (60 psi)	Go to *Step 11*	Go to *Step 7*
23	1. Command the fuel pump "ON" with the Tech 2. 2. Remove the fuel filler cap and listen for the sound of the fuel pump running. 3. Turn the pump off. Was the fuel pump running?	—	Go to *Step 7*	Go to *Fuel System Electrical Test Chart*

Downloaded from www.Manualslib.com manuals search engine

Exhaust Gas Recirculation (EGR) System Check

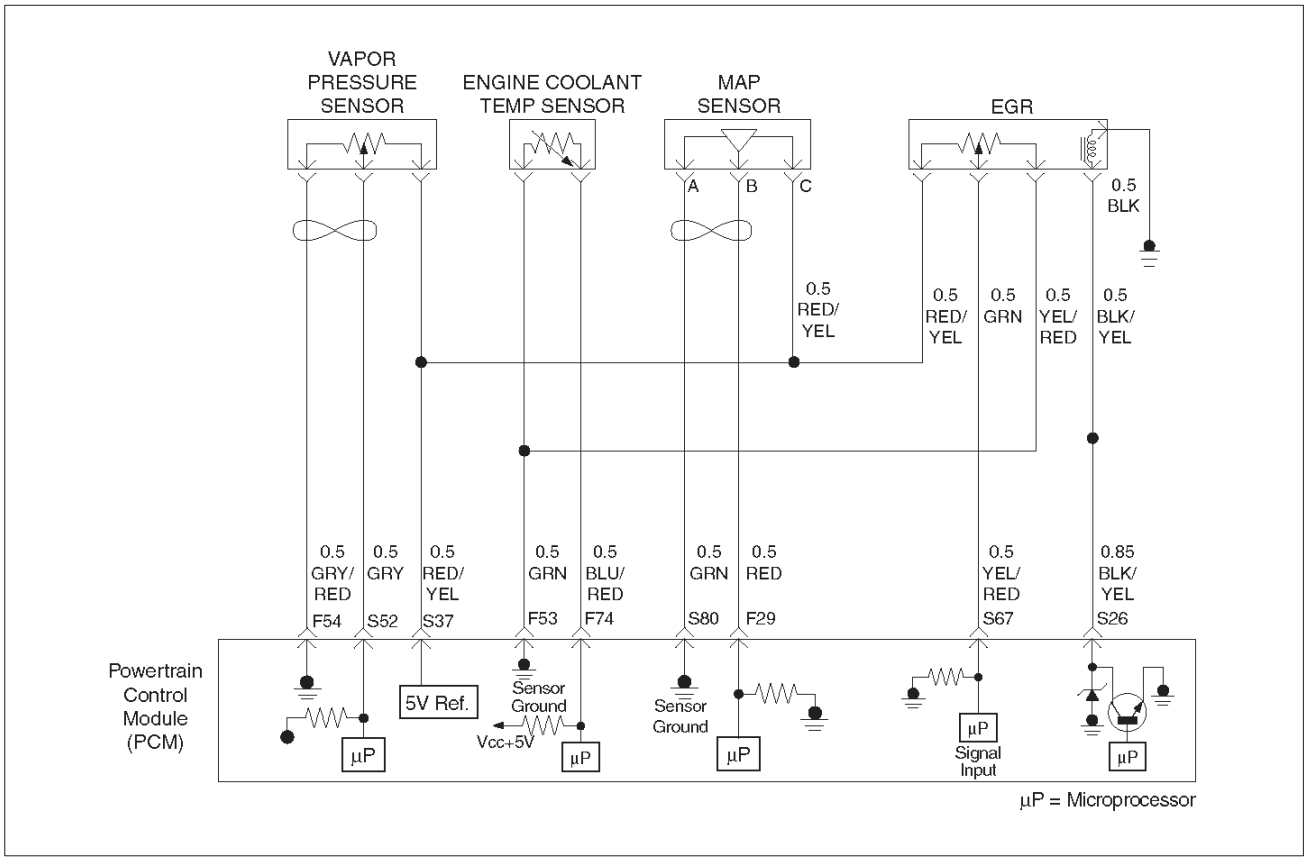

060RY00167

Circuit Description

A properly operation exhaust gas recirculation (EGR) system will directly affect the air/fuel requirements of the engine. Since the exhaust gas introduced into the air/fuel mixture is an inert gas (contains very little or no oxygen), less fuel is required to maintain a correct air/fuel ratio.

Introducing exhaust gas into the combustion chamber lowers combustion temperatures and reduces the formation of oxides of nitrogen (NOx) in the exhaust gas. Lower combustion temperatures also prevent detonation. If the EGR pintle were to stay closed, the inert exhaust gas would be replaced with air and the air/fuel mixture would be leaner. The powertrain control module (PCM) would compensate for the lean condition by adding fuel, resulting in higher long term fuel trim values.

Diagnostic Aids

The EGR valve chart is a check of the EGR system. An EGR pintle constantly in the closed position could cause detonation and high emissions of NOx. It could also result in high long term fuel trim values in the open throttle cell, but not in the closed throttle cell. An EGR pintle constantly in the open position would cause a rough idle. Also, an EGR mounted incorrectly (rotated 180˚) could cause rough idle. Check for the following items:

- EGR passages – Check for restricted or blocked EGR passages.
- Manifold absolute pressure sensor – A manifold absolute pressure sensor may shift in calibration enough to affect fuel delivery. Refer to *Manifold Absolute Pressure Output Check.*

Downloaded from www.Manualslib.com manuals search engine

Exhaust Gas Recirculation (EGR) System Check

Step	Action	Value(s)	Yes	No
1	Check the EGR valve for looseness. Is the EGR valve Loose?	—	Go to *Step 2*	Go to *Step 3*
2	Tighten the EGR valve. Is the action complete?	—	Verify repair	—
3	1. Place the transmission selector in Park or Neutral. 2. Start the engine and idle until warm. 3. Using a Tech 2, command EGR “50% ON.” (Refer to the Miscellaneous Test.) Does the engine idle rough and lose RPMs?	—	EGR system working properly. No problem found.	Go to *Step 4*
4	1. Engine “OFF.” 2. Ignition “ON.” 3. Using a test light to ground, check the EGR harness between the EGR valve and the ignition feed. Does the test light illuminate?	—	Go to *Step 6*	Go to *Step 5*
5	Repair the EGR harness ignition feed. Was the problem corrected?	—	Verify repair	Go to *Step 6*
6	1. Remove the EGR valve. 2. Visually and physically inspect the EGR valve pintle, valve passages and adapter for excessive deposits, obstructions or any restrictions. Does the EGR valve have excessive deposits, obstructions or any restrictions?	—	Go to *Step 7*	Go to *Step 8*
7	Clean or replace EGR system components as necessary. Was the problem corrected?	—	Verify repair	Go to *Step 8*
8	1. Ground the EGR valve metal case to battery (–). 2. Using a Tech 2, command EGR “ON” and observe the EGR valve pintle for movement. Does the EGR valve pintle move according to command?	—	Go to *Step 9*	Go to *DTC P1406 chart*
9	1. Remove the EGR inlet and outlet pipes from the intake and exhaust manifolds. 2. Visually and physically inspect manifold EGR ports and EGR inlet and outlet pipes for blockage or restriction caused by excessive deposits or other damage. Do the manifold EGR ports or inlet and outlet pipes have excessive deposits, obstructions, or any restrictions?	—	Go to *Step 10*	EGR system working properly. No problem found.
10	Clean or replace EGR system components as necessary. Is the action complete?	—	Verify repair	—

Downloaded from www.Manualslib.com manuals search engine

Manifold Absolute Pressure (MAP) Output Check

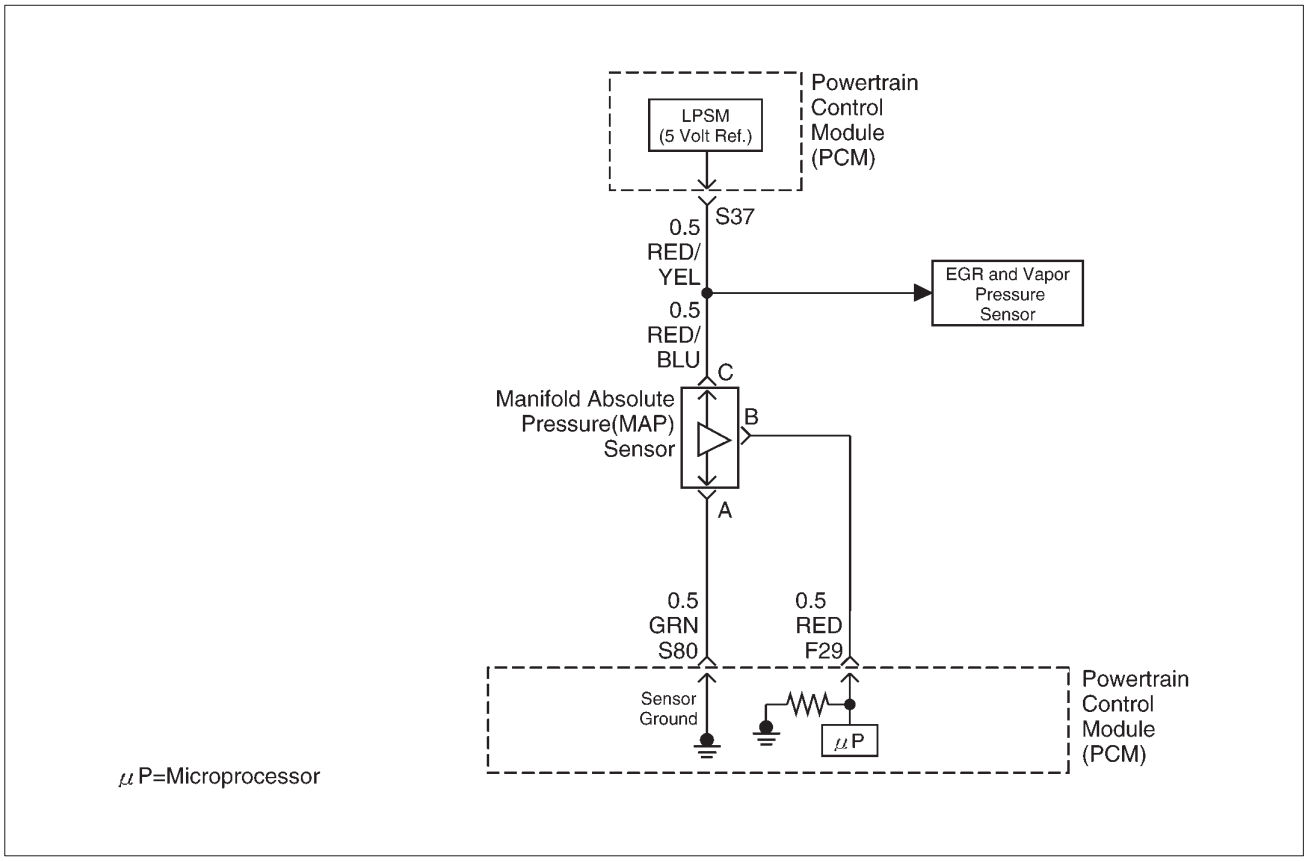

D06RY00165

Circuit Description

The manifold absolute pressure (MAP) sensor measures the changes in the intake MAP which result from engine load (intake manifold vacuum) and engine speed changes; and converts these into a voltage output. The powertrain control module (PCM) sends a 5-volt reference voltage to the MAP sensor. As the MAP changes, the output voltage of the sensor also changes. By monitoring the the sensor output voltage, the PCM knows the MAP. A lower pressure (low voltage) output voltage will be about 1-2 volts at idle. Higher pressure (high voltage) output voltage will be about 4-4.8 volts at wide open throttle. The MAP sensor is also used, under certain conditions, to measure barometric pressure, allowing the PCM to make adjustments for different altitudes. The PCM uses the MAP sensor to diagnose proper operation of the EGR system, in addition to other functions.

Test Description

IMPORTANT: Be sure to used the same diagnostic test equipment for all measurements.

The number(s) below refer to the step number(s) on the Diagnostic Chart.

2. Applying 34 kPa (10 Hg) vacuum to the MAP sensor should cause the voltage to be 1.5-2.1 volts less than the voltage at step 1. Upon applying vacuum to the sensor, the change in voltage should be instantaneous. A slow voltage change indicates a faulty sensor.
3. Check the vacuum hose to the sensor for leaking or restriction, Be sure that no other vacuum devices are connected to the MAP hose.

IMPORTANT: Make sure the electrical connector remains securely fastened.

4. Disconnect the sensor from the bracket. Twist the sensor with your hand to check for an intermittent connection. Output changes greater than 0.10 volt indicate a bad sensor.

Downloaded from www.Manualslib.com manuals search engine

Manifold Absolute Pressure (MAP) Output Check

Step	Action	Value(s)	Yes	No
1	1. Turn the ignition “OFF”and leave it “OFF” for 15 seconds. 2. Ignition “ON.” Don’t crank engine. 3. The Tech 2 should indicate a manifold absolute pressure (MAP) sensor voltage. 4. Compare this scan reading to scan reading of a known good vehicle obtained using the exact same procedure as in Steps 1-4. Is the voltage reading the same +/–0.40 volt?	—	Go to *Step 2*	Go to *Step 5*
2	1. Disconnect the vacuum hose at the MAP sensor and plug the hose. 2. Connect a hand vacuum pump to the MAP sensor. 3. Start the engine. 4. Apply 34 kPa (10 Hg) of vacuum and note the voltage change. Is the voltage change 1.5-2.1 volts less than Step 1?	—	Go to *Step 3*	Go to *Step 4*
3	Check the sensor cover for leakage or restriction. Does the hose supply vacuum to the MAP sensor only?	—	Go to *Step 5*	Go to *Step 4*
4	Repair the hose to block. Is the action complete?	—	Verify repair	—
5	Check the sensor connection. Is the sensor connection good?	—	Go to *Step 6*	Go to *Step 7*
6	Refer to *On-Vehicle Service, MAP Sensor.* Is the action complete?	—	Verify repair	—
7	Repair the poor connection. Is the action complete?	—	Verify repair	—

Downloaded from www.Manualslib.com manuals search engine

Evaporative (EVAP) Emissions Canister Purge Valve Check

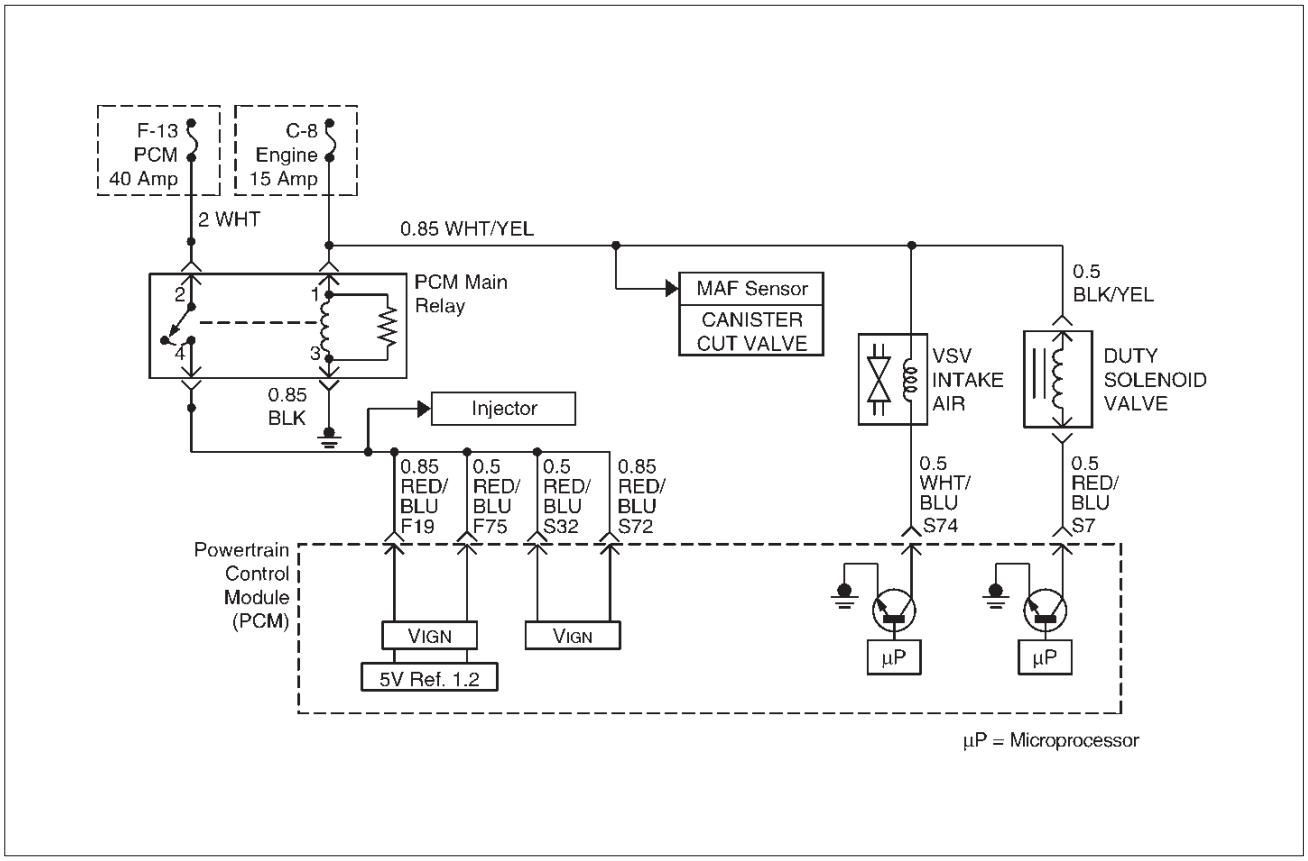

D06RY00128

Circuit Description

Canister purge is controlled by a solenoid valve that allows manifold vacuum to purge the canister. The powertrain control module (PCM) supplies a ground to energize the solenoid valve (purge "ON"). The EVAP purge solenoid control is turned "ON" and "OFF" several times a second. The duty cycle (pulse width or "ON" time) is determined by engine operating conditions including load, throttle position, coolant temperature and ambient temperature. The duty cycle is calculated by the PCM and the purge solenoid is enabled when the appropriate conditions have been met:

- The engine run time after start is more than 60 seconds.
- The engine coolant temperature is above 30˚C (86˚F).
- The fuel control system is operating in the closed-loop mode.

Diagnostic Aids

- Make a visual check of vacuum hoses.
- Check the throttle body for possible cracked.
- Check the malfunction indicator lamp for a possible mechanical problem.

Test Description

The number(s) below refer to the step number(s) on the Diagnostic Chart.

1. Check to see if the solenoid is open or closed. The solenoid is normally de-energized in this step, so it should be closed.
2. This step checks to determine if the solenoid was open due to an electrical circuit problem or a defective solenoid.
3. This should normally energize the solenoid, opening the valve and allowing the vacuum to drop (purge "ON").

Downloaded from www.Manualslib.com manuals search engine

Evaporative (EVAP) Emissions Canister Purge Valve Check

Step	Action	Value(s)	Yes	No
1	1. Ignition “OFF.” 2. Ignition “ON,” engine “OFF.” 3. At the throttle body, disconnect the hose that goes to the pump solenoid. 4. Using a hand vacuum pump with an attached vacuum gauge J 23738-A, apply vacuum (10” Hg or 34 kPa) to the solenoid. Does the solenoid hold the vacuum?	—	Go to *Step 3*	Go to *Step 2*
2	1. Disconnect the solenoid electrical connector. 2. As in Step 1, apply vacuum (10” Hg or 34 kPa) to the solenoid. Does the solenoid hold the vacuum?	—	Go to *Step 4*	Go to *Step 7*
3	1. At the throttle body, put a cap over the vacuum port where the hose was disconnected for testing. This is to prevent a vacuum leak when the engine is started. 2. Ignition “OFF.” 3. Install the Tech 2. 4. Apply vacuum to the purge solenoid with the hand vacuum pump. 5. Start the engine, run at 2500 RPM. 6. Using the Tech 2, select Powertrain, 3.5–V6 6VE1, F3: Misc. Tests, F2: EVAP Purge, F0: EVAP Purge. (Refer to the Misellaneous Test.) 7. Turn the purge solenoid “ON.” Did the vacuum drop when the purge was turned on?	—	Go to *Step 8*	Go to *Step 9*
4	Check for a short to ground in the RED/BLU wire. Is there a short?	—	Go to *Step 5*	Go to *Step 6*
5	Repair the short to ground. Is the action complete?	—	Verify repair	—
6	Replace the PCM. **IMPORTANT:** The replacement PCM must be programmed. Refer to *On-Vehicle Service* in *Powertrain Control Module and Sensors for procedures.* And also refer to latest Service Bulletin. Check to see if the Latest software is released or not. And then Down Load the LATEST PROGRAMMED SOFTWARE to the replacement PCM. Is the action complete?	—	Verify repair	—
7	Replace the faulty purge solenoid. Refer to *On-Vehicle Service, EVAP Canister Purge Solenoid.* Is the action complete?	—	Verify repair	—

Downloaded from www.Manualslib.com manuals search engine

Evaporative (EVAP) Emissions Canister Purge Valve Check (Cont'd)

Step	Action	Value(s)	Yes	No
8	1. Turn the ignition "OFF." 2. At the throttle body, install a vacuum gauge where the hose from the purge solenoid was disconnected for testing. 3. Start the engine. 4. Stabilize the engine speed at about 2500 RPM. 5. Momentarily snap the throttle open and let it return to idle. Is there approximately 10" Hg (34 kPa) of vacuum available at the EVAP emission canister purge solenoid?	—	No problem found in the EVAP emission canister purge valve check	Refer to *Diagnostic Aids*
9	1. Disconnect the solenoid electrical connector. 2. Connect a test lamp between the harness terminals. Does the test lamp light?	—	Go to *Step 7*	Go to *Step 10*
10	Probe terminal A and terminal B with a test lamp to ground. Does the test lamp light on both terminals?	—	Go to *Step 11*	Go to *Step 12*
11	Repair the short to voltage in the RED/BLUE wire. Is the action complete?	—	Verify repair	—
12	Does on of the terminals light the test lamp?	—	Go to *Step 13*	Go to *Step 14*
13	Check for an open in the RED/BLU wire between the purge solenoid and the PCM. Was there an open circuit?	—	Go to *Step 15*	Go to *Step 6*
14	Repair the open in the BLK/YEL wire. Is the action complete?	—	Verify repair	—
15	Repair the open in the RED/BLU wire. Is the action complete?	—	Verify repair	—

Downloaded from www.Manualslib.com manuals search engine

Upshift Lamp System Check (Manual Transmission Only)

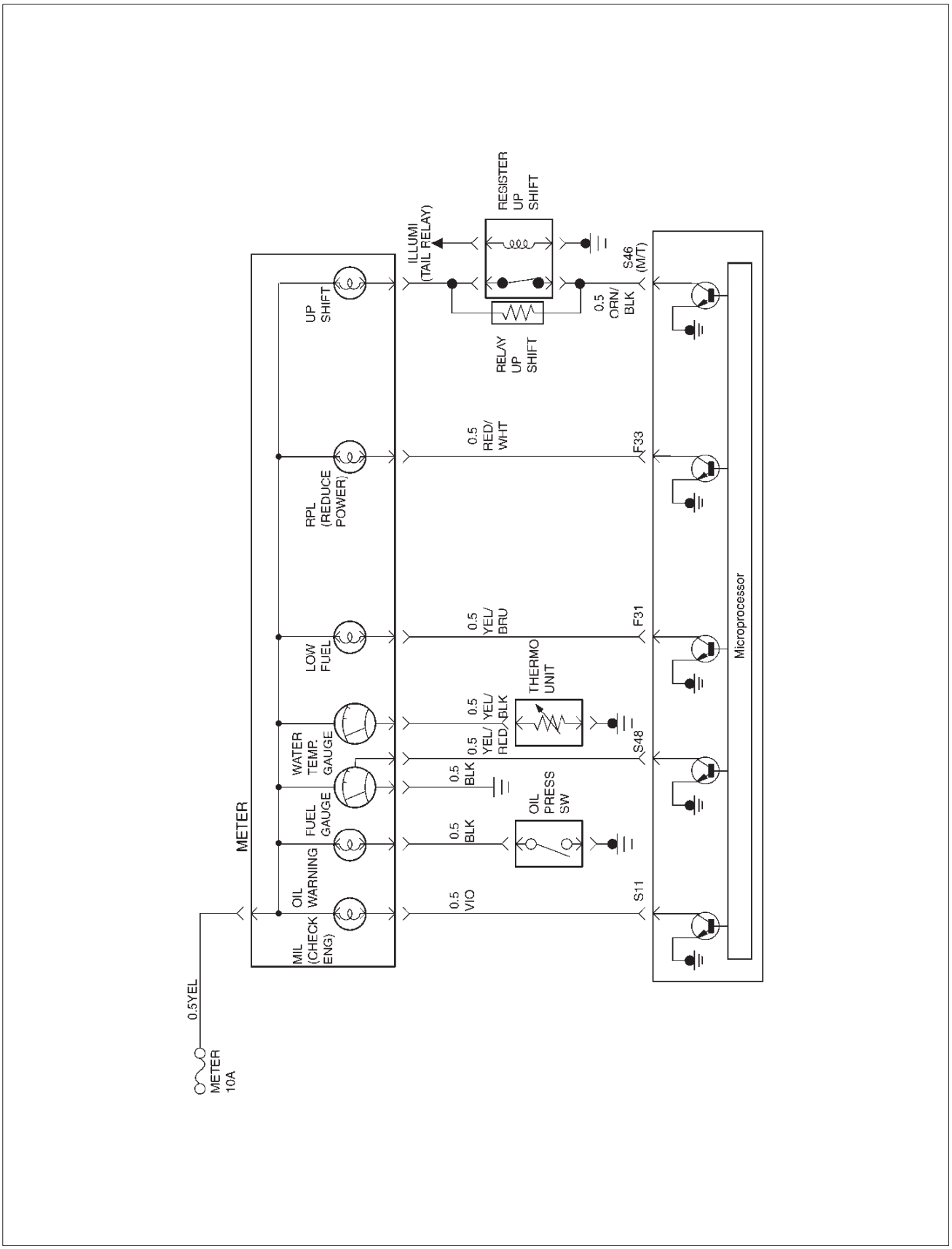

060RY00127

Downloaded from www.Manualslib.com manuals search engine

Circuit Description

The shift lamp indicates the best transmission shift point for maximum fuel economy.
The lamp is controlled by the Power Train Control Module (PCM) and is turned “ON” by grounding the BLK wire.
The PCM is used information from the following inputs to control the upshift lamp.

- Engine Coolant temperature (ECT) Sensor
- Throttle Position Sensor
- Vehicle Speed Sensor
- Engine Speed

The PCM uses the measured RPM and the vehicle speed to calculate what gear the vehicle is in.
It’s this calculation that determines when the upshift lamp should be turned “ON”.

Diagnostic Aids

An intermittent may be caused by a poor connection, rubbed-through wire insulation. Check for poor connections or a damaged harness.

Inspect the PCM harness and connector for proper mating, broken locks, improperly formed or damaged terminals, poor terminal-to-wire connection and damaged harness.

Test Description

1. This should not turn “ON” the up-shift lamp. If the lamp is “ON”, there is a short to ground in BLK or a fault PCM.
2. This checks the upshift lamp circuit up to the PCM connector.
   If the up-shift lamp illuminates, then the PCM connector is faulty or PCM does not have the ability to ground the circuit.

Up-Shift Lamp System Check

Step	Action	Value(s)	Yes	No
1	1. Verify the customer complaints in accordance with mentioned below: Go to the adequate Step Chart first. ● At the 1st gear position, the lamp doesn’t illuminate: Go to Step Chart ● At the 3rd gear position, the lamp doesn’t illuminate: Go to Step Chart ● Upshift Lamp doesn’t illuminate always. 2. Ignition “ON”, engine “OFF”. 3. Using the Tech 2, check to see if the upshift lamp turn “ON” or “OFF”. Does the upshift lamp stay “OFF”?	—	Go to *Step 2*	Go to *Step 12*
2	Check for an open of 15A Turn Backup Fuse. Was a problem found?	—	Go to *Step 3*	Go to *Step 4* Refer to Section 8
3	Replace the fuse. Is the action complete?	Verify Repair	—	—
4	Check for an burned out the Upshift Lamp. Was a problem found?	—	Go to *Step 5*	Go to *Step 6*
5	Replace the Upshift Lamp. Is the action complete?	Verify Repair	—	—
6	1. Check for an Clutch Switch operation and the fixing condition. 2. Check for an open or short of clutch switch. 3. Check for an open or short of WHT/GRN wiring harness between Turn Backup Fuse and Clutch Switch. Was a problem found?	—	Go to *Step 7*	Go to *Step 8*

Downloaded from www.Manualslib.com manuals search engine

Up-Shift Lamp System Check (Cont'd)

Step	Action	Value(s)	Yes	No
7	1. Replace the Clutch Switch. Or, 2. Repair for an open or short of WHT/GRN wiring harness. Is the action complete?	Verify Repair	—	—
8	1. Check for an open or short of 1-2 Transmission Switch. 2. Check for an open or short of 3-4 Transmission Switch. 3. Check for an open or short of GRN wiring harness between Clutch Switch and Transmission Switches. Was a problem found?	—	Go to *Step 9*	Go to *Step 10*
9	1. Replace the applicable Transmission Switch. or, 2. Repair for an open or short of GRN wiring harness. Is the action complete?	Verify Repair	—	—
10	1. Check for an open or short in the Alarm and Relay Control Unit. 2. Check for an open of BLU/ORN wiring harness between Transmission Switches and Alarm Relay Control Unit. Was a problem found?	—	Go to *Step 11*	Go to *Step 12*
11	1. Replace the Alarm and Relay Control Unit. Or, 2. Repair for an open of BLU/ORN wiring harness between Alarm and Relay Control Unit and PCM connector. Is the action complete?	Verify Repair	—	Go to *Step 15*
12	1. Ignition "OFF". 2. Disconnect the PCM connectors. 3. Shift the gear to 1st or 4th gear position. 4. Turn ignition "ON", but *don't start the engine*. Does the Upshift Lamp Stay "ON"?	—	Go to *Step 13*	Go to *Step 15*
13	Check for an short to ground of YEL/GRN wiring harness between Alarm and PCM connector. Was a problem found?	—	Go to *Step 14*	Go to *Step 15*
14	Repair for an open YEL/GRN wiring harness. Is the action complete?	Verify Repair	—	—
15	Replace the PCM. **IMPORTANT:** The replacement PCM must be programmed refer to *ON-Vehicle Service in Power Train Control Module and Sensor* for procedure. And also refer to latest Service Bulletin. Check to see if the Latest software is released or not. And then Down Load the LATEST PROGRAMMED SOFTWARE to the replacement PCM. Is the action complete?	—	—	—

Downloaded from www.Manualslib.com manuals search engine

PCM Diagnostic Trouble Codes

The following table lists the diagnostic trouble codes supported by this vehicle application. If any DTCs not listed here are displayed by a Tech 2, the Tech 2 data may be faulty; notify the Tech 2 manufacturer of any DTCs displayed that are not included in the following table.

PCM Diagnostic Trouble Codes

DTC	Description	Type	Illuminate MIL (Check Enigne Lamp)	Illuminate RPL (Reduced Power Lamp)
P0101	MAF System Performance	B	Yes	No
P0102	MAF Sensor Circuit Low Frequency	B	Yes	No
P0103	MAF Sensor Circuit High Frequency	B	Yes	No
P0106	MAP Rationality/Performance	B	Yes	No
P0107	MAP Circuit Low Input Voltage	B	Yes	No
P0108	MAP Circuit Hgh Input Voltage	B	Yes	No
P0112	IAT Circuit Low Input Voltage	B	Yes	No
P0113	IAT Circuit Hgh Input Voltage	B	Yes	No
P0117	ECT Circuit Low Input Voltage	B	Yes	No
P0118	ECT Circuit Hgh Input Voltage	B	Yes	No
P0125	ECT Insufficient for Closed Loop Fuel Control	B	Yes	No
P0128	ECT Below Thermostat Regulating Temperature	B	Yes	No
P0131	O2 Sensor Circuit Low Voltage (Bank 1 Sensor 1)	B	Yes	No
P0132	O2 Sensor Circuit High Voltage (Bank 1 Sensor 1)	B	Yes	No
P0133	O2 Sensor Circuit Slow Response (Bank 1 Sensor 1)	B	Yes	No
P0134	O2 Sensor Circuit No Activity Detected (Bank 1 Sensor 1)	B	Yes	No
P0135	O2 Sensor Heater Circuit (Bank 1 Sensor 1)	B	Yes	No
P0137	O2 Sensor Circuit Low Voltage (Bank 1 Sensor 2)	B	Yes	No
P0138	O2 Sensor Circuit High Voltage (Bank 1 Sensor 2)	B	Yes	No
P0140	O2 Sensor Circuit No Activity Detected (Bank 1 Sensor 2)	B	Yes	No
P0141	O2 Sensor Heater Circuit (Bank 1 Sensor 2)	B	Yes	No
P0151	O2 Sensor Circuit Low Voltage (Bank 2 Sensor 1)	B	Yes	No
P0152	O2 Sensor Circuit High Voltage (Bank 2 Sensor 1)	B	Yes	No
P0153	O2 Sensor Circuit Slow Response (Bank 2 Sensor 1)	B	Yes	No
P0154	O2 Sensor Circuit No Activity Detected (Bank 2 Sensor 1)	B	Yes	No
P0155	O2 Sensor Heater Circuit (Bank 2 Sensor 1)	B	Yes	No
P0157	O2 Sensor Circuit Low Voltage (Bank 2 Sensor 2)	B	Yes	No
P0158	O2 Sensor Circuit High Voltage (Bank 2 Sensor 2)	B	Yes	No
P0160	O2 Sensor Circuit No Activity Detected (Bank 2 Sensor 2)	B	Yes	No
P0161	O2 Sensor Heater Circuit (Bank 2 Sensor 2)	B	Yes	No
P0171	O2 Sensor – System too Lean (Bank 1)	B	Yes	No
P0172	O2 Sensor – System too Rich (Bank 1)	B	Yes	No
P0174	O2 Sensor – System too Lean (Bank 2)	B	Yes	No

Downloaded from www.Manualslib.com manuals search engine

DTC	Description	Type	Illuminate MIL (Check Enigne Lamp)	Illuminate RPL (Reduced Power Lamp)
P0175	O2 Sensor – System too Rich (Bank 2)	B	Yes	No
P0201	Injector 1 Control Circuit	A	Yes	No
P0202	Injector 2 Control Circuit	A	Yes	No
P0203	Injector 3 Control Circuit	A	Yes	No
P0204	Injector 4 Control Circuit	A	Yes	No
P0205	Injector 5 Control Circuit	A	Yes	No
P0206	Injector 6 Control Circuit	A	Yes	No
P0300	Engine Misfire Detected	B	Yes	No
P0301	Engine Misfire Detected Cylinder #1	B	Yes	No
P0302	Engine Misfire Detected Cylinder #2	B	Yes	No
P0303	Engine Misfire Detected Cylinder #3	B	Yes	No
P0304	Engine Misfire Detected Cylinder #4	B	Yes	No
P0305	Engine Misfire Detected Cylinder #5	B	Yes	No
P0306	Engine Misfire Detected Cylinder #6	B	Yes	No
P0325	ION Sensing Module Knock Intensity Circuit	B	Yes	No
P0336	CKP Sensor Circuit Range/Performance (58X)	B	Yes	No
P0337	CKP Sensor Circuit No signal (58X)	B	Yes	No
P0341	CMP Sensor Circuit Range/Performance	C	No	No
P0342	CMP Sensor Circuit No signal	C	No	No
P0351	Injection 1 Control Circuit	A	Yes	No
P0352	Ignition 2 Control Circuit	A	Yes	No
P0353	Ignition 3 Control Circuit	A	Yes	No
P0354	Ignition 4 Control Circuit	A	Yes	No
P0355	Ignition 5 Control Circuit	A	Yes	No
P0356	Ignition 6 Control Circuit	A	Yes	No
P0401	EGR Flow Insufficient	B	Yes	No
P0402	EGR Flow Excessive	B	Yes	No
P0404	EGR Range/Performance (Open Valve)	B	Yes	No
P0405	EGR Sensor Circuit Low Voltge	B	Yes	No
P0406	EGR Sensor Circuit High Voltge	B	Yes	No
P0420	Catalyst System Low Efficiency (Bank 1)	A	Yes	No
P0430	Catalyst System Low Efficiency (Bank 2)	A	Yes	No
P0440	EVAP Control System	B	Yes	No
P0442	EVAP Control System Small Leak Deteced	B	Yes	No
P0446	EVAP Control System Vent Valve Blocked	B	Yes	No
P0452	EVAP Control System Tank Pressure Sensor Low Input	B	Yes	No
P0453	EVAP Control System Tank Pressure Sensor High Input	B	Yes	No
P0456	EVAP Control System Very Small Leak Deteced	C	No	No
P0461	Fuel Level Sensor Circuit Range/Performance	B	Yes	No
P0462	Fuel Level Sensor Circuit Low Input Voltage	B	Yes	No

Downloaded from www.Manualslib.com manuals search engine

DTC	Description	Type	Illuminate MIL (Check Enigne Lamp)	Illuminate RPL (Reduced Power Lamp)
P0463	Fuel Level Sensor Circuit High Input Voltage	B	Yes	No
P0502	No VSS Signal	B	Yes	No
P0506	Idle Speed Control RPM too Low	B	Yes	No
P0507	Idle Speed Control RPM too High	B	Yes	No
P0562	System Voltge is Low	D	No	No
P0563	System Voltge is High	B	Yes	No
P0565	Cruise Main Circuit (Refer to Chassis Electrical)	D	No	No
P0566	Cruise Cancel Circuit (Refer to Chassis Electrical)	D	No	No
P0567	Cruise Resume Circuit (Refer to Chassis Electrical)	D	No	No
P0568	Cruise Set Circuit (Refer to Chassis Electrical)	D	No	No
P0575	Cruise Analog Input Circuit (Refer to Chassis Electrical)	C	No	No
P0601	PCM/ECM Memory Checksum	A	Yes	No
P0602	PCM/ECM Programming error	D	No	No
P0604	PCM/ECM RAM error	D	No	No
P0606	PCM/ECM Internal Preformance	D	No	No
P1106	MAP Circuit Intermittent High Voltage)	D	No	No
P1107	MAP Circuit Intermittent Low Input Voltage	D	No	No
P1111	IAT Circuit Intermittent High Voltage	D	No	No
P1112	IAT Circuit Intermittent Low Input Voltage	D	No	No
P1114	ECT Circuit Intermittent Low Voltage	D	No	No
P1115	ECT Circuit Intermittent High Voltage	D	No	No
P1120	TPS1 Circuit	D	No	No
P1125	ETC Limit Performance Mode	A	Yes	Yes
P1133	O2 Sensor – Too Few Rich/Lean and Lean/Rich Switches (Bank 1 Sensor 1)	B	Yes	No
P1134	O2 Sensor – Transition Switch Time ratio (Bank 1 Sensor 1)	B	Yes	No
P1153	O2 Sensor – Too Few Rich/Lean and Lean/Rich Switches (Bank 2 Sensor 1)	B	Yes	No
P1154	O2 Sensor – Transition Switch Time ratio (Bank 2 Sensor 1)	B	Yes	No
P1167	Fuel supply System RICH During Decel Fuel Cut Off	D	No	No
P1169	Fuel supply System RICH During Decel Fuel Cut Off	D	No	No
P1171	Fuel supply System Lean During Power Enrichment	D	No	No
P1220	TPS2 Circuit	D	No	No
P1221	TPS1–TPS2 Correlation (Circuit Performance)	D	No	No
P1271	APS1–APS2 Correlation (Circuit Performance)	D	No	No
P1272	APS2–APS3 Correlation (Circuit Performance)	D	No	No
P1273	APS1–APS3 Correlation (Circuit Performance)	D	No	No
P1275	APS1 Circuit	D	No	No
P1280	APS2 Circuit	D	No	No
P1285	APS3 Circuit	D	No	No
P1290	ETC Forced Idle Mode	A	Yes	Yes

Downloaded from www.Manualslib.com manuals search engine

DTC	Description	Type	Illuminate MIL (Check Enigne Lamp)	Illuminate RPL (Reduced Power Lamp)
P1295	ETC Power Management Mode	A	Yes	Yes
P1299	ETC Forced Engine Shotdown Mode	A	Yes	Yes
P1310	ION Sensing Module Diagnostic	A	Yes	No
P1311	ION Sensing Module SEC 1 Line Circuit Fault	A	Yes	No
P1312	ION Sensing Module SEC 2 Line Circuit Fault	A	Yes	No
P1326	ION Sensing Module Combustion Quality circuit	A	Yes	No
P1340	ION Sensing Module – Cylinder Synchronization	B	Yes	No
P1404	EGR Range/Performance (Closed Valve)	B	Yes	No
P1441	EVAP Control System Comtinuous Open Puege Flow	B	Yes	No
P1514	TPS–MAF Correlation	A	Yes	No
P1515	Command–Acrual TPS Correlation	A	Yes	No
P1516	Command–Acrual TPS Correlation Error	A	Yes	No
P1523	Throttle Actuator Control Return Performance	D	No	No
P1625	PCM/ECM System Reset	C	No	No
P1635	Reference Voltage #1 Ciecuit	D	No	No
P1639	Reference Voltage #2 Ciecuit	D	No	No
P1640	ODM Output circuit Fault	D	No	No
P1650	QDM Output Circuit Fault	D	No	No

Downloaded from www.Manualslib.com manuals search engine

Diagnostic Trouble Code (DTC) P0101 MAF System Performance

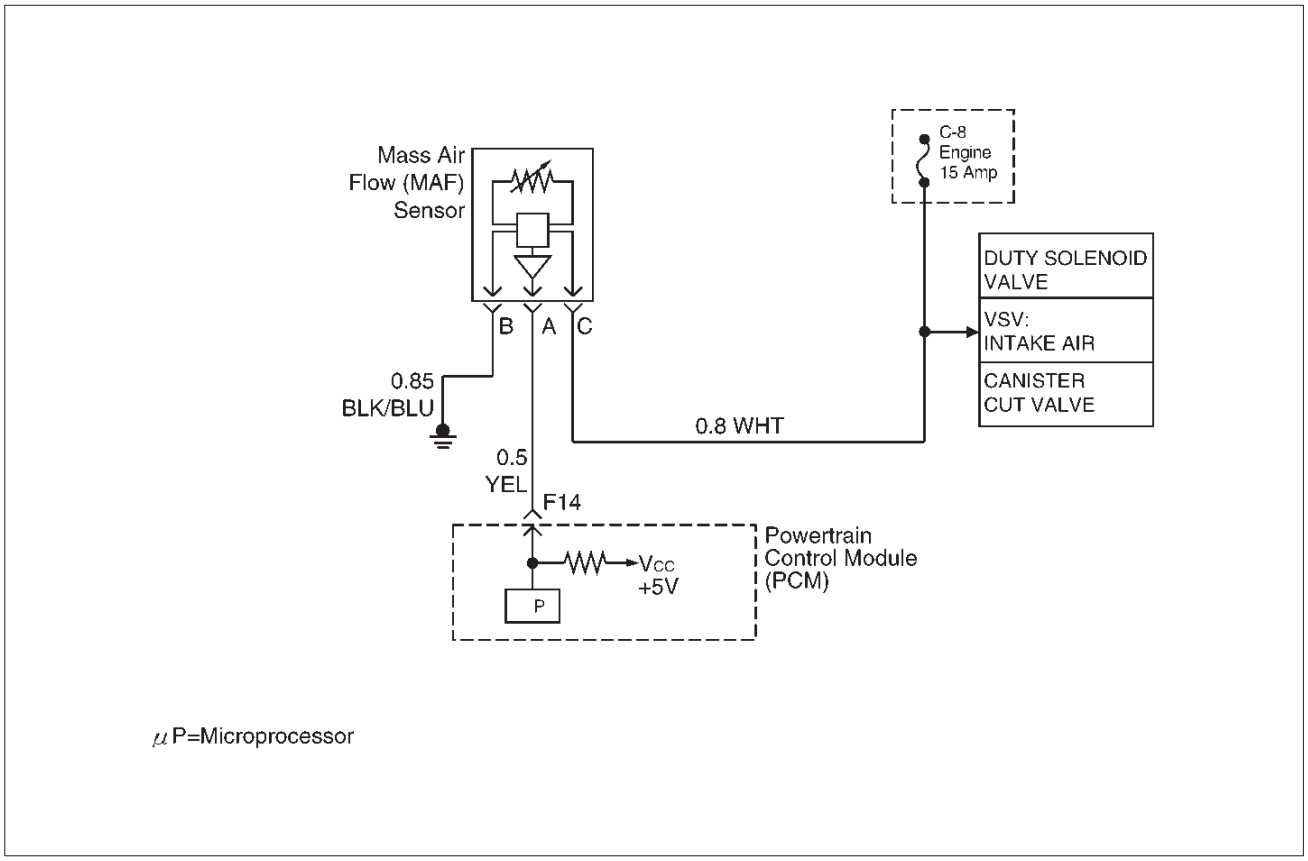

D06RY00164

Circuit Description

The mass air flow (MAF) sensor measures the amount of air which passes through it into the engine during a given time. The powertrain control module (PCM) uses the mass air flow information to monitor engine operating conditions for fuel delivery calculations. A large quantity of air entering the engine indicates an acceleration or high load situation, while a small quantity or air indicates deceleration or idle.

The MAF sensor produces a frequency signal which can be monitored using a Tech 2. The frequency will vary within a range of around 4 to 7g/s at idle to around 25 to 40g/s at maximum engine load. DTC P0101 will be set if the signal from the MAF sensor does not match a predicted value based on throttle position and engine RPM.

Conditions for setting the DTC

- The engine is running.
- No TP sensor and MAP sensor DTCs are set.
- No MAF frequency DTCs are set.
- System voltage is between 11.5 volts and 16 volts.

Action Taken When the DTC Sets

- The PCM will illuminate the malfunction indicator lamp (MIL) the first time the fault is detected.
- The PCM calculates an air flow value based on idle air control valve position, throttle position, RPM and barometric pressure.
- The PCM will store condition which were present when the DTC was set as Freeze Frame and in the Failure Records data.

Conditions for Clearing the MIL/DTC

- The PCM will turn the MIL “OFF” on the third consecutive trip cycle during which the diagnostic has been run and the fault condtion is no longer present.
- A history DTC P0101 will clear after 40 cosecutive trip cycle during which the warm up cycles have occurred without a fault.
- DTC P0101 can be cleared using the Tech 2 “Clear Info” function or by disconnecting the PCM battery feed.

Diagnostic Aids

An intermittent may be caused by the following:

- Poor connections.
- Mis routed harness.
- Rubbed through wire insulation.
- Broken wire inside the insulation.
- he duct work at the MAF sensor for leaks.
- An engine vacuum leak.
- The PCV system for vacuum leaks.
- An incorrect PCV valve.
- The engine oil dip stick not fully seated.
- The engine oil fill cap loose or missing.

Check for the following conditions:

Downloaded from www.Manualslib.com manuals search engine

- Poor connection at PCM-Inspect harness connectors for backed out terminals, improper mating, broken locks, improperly formed or damaged terminals, and poor terminal to wire connection.
- Damaged harness- Inspect the wiring harness for damage. If the harness appears to be OK, observe the Mass Air Flow (MAF) display on the Tech 2 while moving connectors and wiring harnesses related to the sensor.
- Plugged intake air duct or filter element
- A wide–open throttle acceleration from a stop should cause the mass air flow displayed on a Tech 2 to increase from about 3–6 g/s at idle to 100 g/s or greater at the time of the 1–2 shift. If not, check for a restriction.

A change in the display will indicate the location of the fault.

If DTC P0101 cannot be duplicated, the information included in the Faillure Records data can be useful in determined vehicle mileage since the DTC was last set.

If it is determined that the DTC occurs intermittently, performing the DTC P001 Diagnostic Chart may isolate the cause of the fault.

DTC P0101 – MAF System Performance

Step	Action	Value(s)	Yes	No
1	Was the “On-Board Diagnostic (OBD) System Check” performed?	—	Go to *Step 2*	Go to *OBD System Check*
2	1. Ignition “OFF.” 2. Disconnect the Mass Air Flow (MAF) Sensor harness connector from the MAF Sensor. 3. Place an unpowered test lamp between the 12 volt signal circuit and the ground circuit, both at the MAF Sensor connector. 4. Ignition “ON,” Engine“OFF.” Did the test lamp illuminate?	—	Go to *Step 6*	Go to*Step 3*
3	1. Ignition “ON,” Engine “OFF.” 2. Using a Digital Voltmeter (DVM), check the 12 volt signal circuit for the correct voltage. Did the DVM indicate a value within the following range?	11.5 to 12.5 Volt	Go to *Step 5*	Go to *Step 4*
4	1. Ignition “OFF.” 2. Check the 12 volt signal circuit for the following conditions: • An open circuit • A short to ground Was the problem found?	—	Verify repair	—
5	Check the MAF ground circuit for the following conditions: • An open circuit • A short to voltage Was a problem found?	—	Verify repair	—
6	1. Ignition “OFF.” 2. Check the MAF Sensor signal circuit between the PCM and the MAF Sensor for the following conditions: • An open circuit • A short to ground • A short to battery voltage Was a problem found?	—	Verify repair	Go to *Step 7*

Downloaded from www.Manualslib.com manuals search engine

DTC P0101 – MAF System Performance (Cont'd)

Step	Action	Value(s)	Yes	No
7	1. Connect the MAF Sensor wiring harness connector to the MAF Sensor. 2. Connect the Tech 2 to the vehicle. 3. Place the Transmission in Park/Neutral, and fully apply the Parking Brake. 4. Start the engine. 5. Select the Mass Air Flow (MAF) parameter on the Tech 2. With the engine idling, does the Tech 2 display the following value(s)?	4 to 7 g/s	Go to *Step 8*	Go to *Step 9*
8	Observe the Tech 2 value while increasing the engine RPM to its upper limit. Does the Tech 2 display the following value(s)?	25 to 40 g/s	Go to *Step 10*	Go to *Step 9*
9	Replace the MAF Sensor. Is the action complete?	—	Verify repair	—
10	Replace the PCM. **IMPORTANT:** The PCM must be reprogrammed. Refer to PCM reprogramming. And also refer to latest Service Bulletin. Check to see if the Latest software is released or not. And then Down Load the LATEST PROGRAMMED SOFTWARE to the replacement PCM. Is the action complete?	—	Verify repair	—

Downloaded from www.Manualslib.com manuals search engine

Diagnostic Trouble Code (DTC) P0102 MAF Sensor Circuit Low Frequency

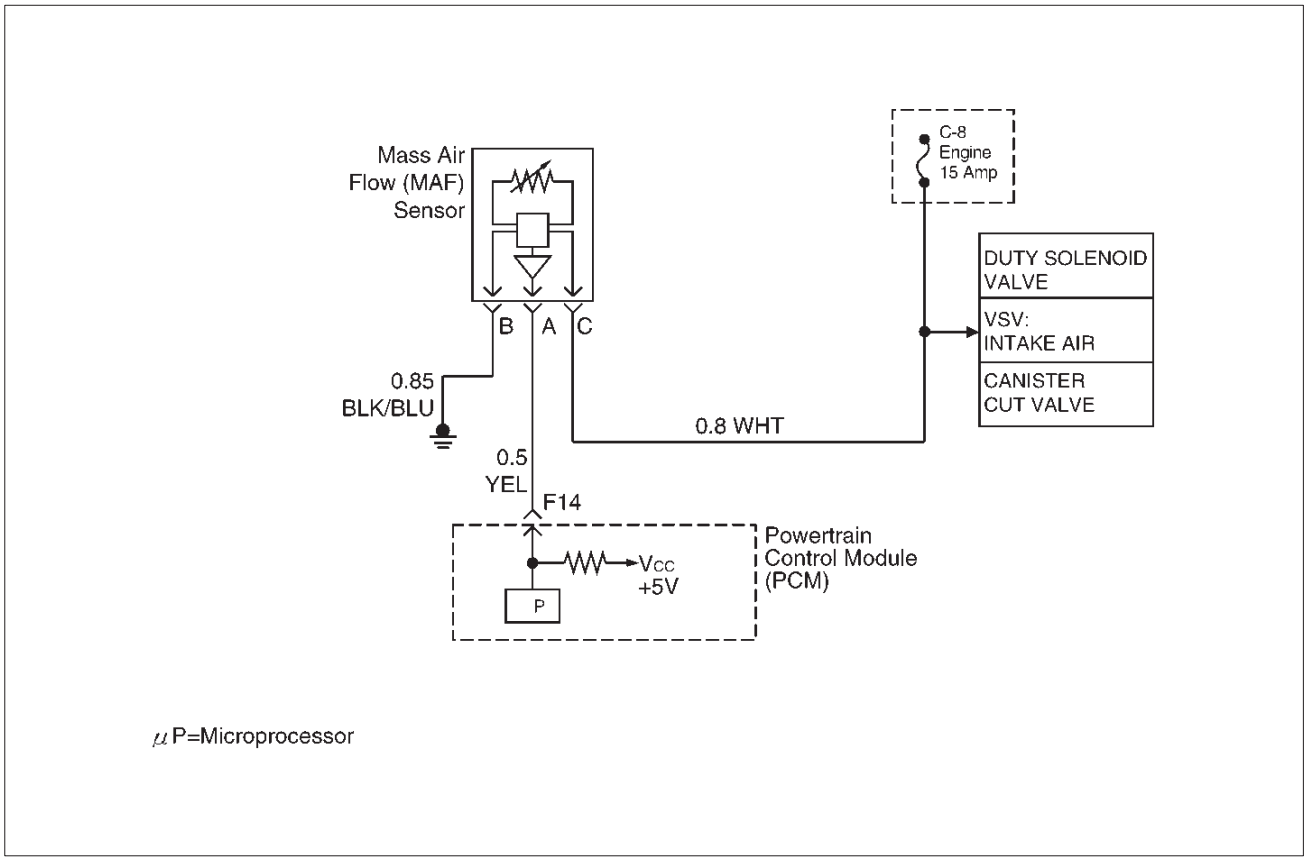

D06RY00164

Circuit Description

The mass air flow (MAF) sensor measures the amount of air which passes through it into the engine during a given time. The powertrain control module (PCM) uses the mass air flow information to monitor engine operating conditions for fuel delivery calculations. A large quantity of air entering the engine indicates an acceleration or high load situation, while a small quantity of air indicates deceleration or idle.

The MAF sensor produces a frequency signal which can be monitored using a Tech 2. The frequency will vary within a range of around 4 to 7g/s at idle to around 25 to 40 g/s at maximum engine load. DTC P0102 will be set if the signal from the MAF sensor is below the possible range of a normally operating MAF sensor.

Conditions for Setting the DTC

- The engine is running above 500 RPM for greater than 10 seconds.
- System voltage is above 11.5 volts.
- MAF signal frequency is below 1.6g/s for a total of 50-percent of the last 1000 samples monitored. A sample is taken every cylinder event.

Action Taken When the DTC Sets

- The PCM will illuminate the malfunction indicator lamp (MIL) the first time the fault is detected.
- The PCM calculates an air flow value based on idle air control valve position, throttle position, RPM and barometric pressure.
- The PCM will store conditions which were present when the DTC was set as Freeze Frame and in the Failure Records data.

Conditions for Clearing the MIL/DTC

- The PCM will turn the MIL “OFF” on the third consecutive trip cycle during which the diagnostic has been run and the fault condition is no longer present.
- A history DTC P0102 will clear after 40 consecutive warm-up cycles have occurred without a fault.
- DTC P0102 can be cleared by using the Tech 2 “Clear Info” function or by disconnecting the PCM battery feed.

Diagnostic Aids

Check for the following conditions:

- Poor connection at PCM – Inspect harness connectors for backed-out terminals, improper mating, broken locks, improperly formed or damaged terminals, and poor terminal-to-wire connection.
- Misrouted harness – Inspect the MAF sensor harness to ensure that it is not routed too close to high voltage wires.
- Damaged harness – Inspect the wiring harness for damage. If the harness appears to be OK, observe the Tech 2 while moving connectors and wiring harnesses related to the MAF sensor. A change in the display will indicate the location of the fault.
- Plugged intake air duct or filter element – A wide-open throttle acceleration from a stop should cause the mass air flow displayed on a Tech 2 to increase from

Downloaded from www.Manualslib.com manuals search engine

about 3-6 g/second at idle to 100 g/second or greater at the time of the 1-2 shift. If not, check for a restriction.

If DTC P0102 cannot be duplicated, the information included in the Failure Records data can be useful in determining vehicle mileage since the DTC was last set.

Test Description

Number(s) below refer to the step number(s) on the Diagnostic Chart.

2. This step verifies that the problem is present at idle.
4. A voltage reading of less than 4 or over 5 volts at the MAF sensor signal circuit indicates a fault in the wiring or a poor connection.
5. This verifies that ignition feed voltage and a good ground are available at the MAF sensor.

DTC P0102 – MAF Sensor Circuit Low Frequency

Step	Action	Value(s)	Yes	No
1	Was the “On-Board Diagnostic (OBD) System Check” performed?	—	Go to *Step 2*	Go to *OBD System Check*
2	1. Start the engine. 2. With the engine idling, monitor “MAF Frequency” display on the Tech 2. Is the “MAF Frequency” below the specified value?	1.6 g/s	Go to *Step 4*	Go to *Step 5*
3	1. Ignition “ON,” engine “OFF.” 2. Review and record Tech 2 Failure Records data. 3. Operate the vehicle within Failure Records conditions as noted. 4. Using a Tech 2, monitor “DTC” info for DTC P0102. Does the Tech 2 indicate DTC P0102 failed this ignition?	—	Go to *Step 4*	Refer to *Diagnostic Aids*
4	1. Ignition “OFF.” 2. Disconnect the MAF sensor connector. 3. Ignition “ON,” engine “OFF.” 4. Using a DVM, measure voltage between the MAF sensor signal circuit and battery ground. Is the voltage near the specified value?	5 V	Go to *Step 5*	Go to *Step 8*
5	Connect a test light between the MAF sensor ignition feed and ground circuits at the MAF sensor harness connector. Is the test light “ON?”	—	Go to *Step 13*	Go to *Step 6*
6	Connect a test light between the MAF sensor ignition feed circuit and battery ground. Is the test light “ON?”	—	Go to *Step 12*	Go to *Step 7*
7	1. Check for a poor connection at the MAF sensor. 2. If a poor connection is found, replace the faulty terminal(s). Was a poor connection found?	—	Verify repair	Go to *Step 11*
8	1. Ignition “OFF.” 2. Disconnect the MAF sensor. 3. Disconnect the PCM connector for the MAF signal circuit. 4. Ignition “ON,” engine “OFF.” 5. With the DVM, measure the voltage between the MAF signal terminal at the PCM and battery ground. Is the voltage under the specified value?	4 V	Go to *Step 9*	Go to *Step 10*

Downloaded from www.Manualslib.com manuals search engine

DTC P0102 – MAF Sensor Circuit Low Frequency (Cont'd)

Step	Action	Value(s)	Yes	No
9	1. Ignition "OFF." 2. Disconnect the PCM connector. 3. Ignition "ON." 4. Check the MAF sensor signal circuit for a short to 5 volts. Is the action complete?	—	Verify repair	—
10	1. Ignition "OFF." 2. Disconnect the PCM connector. 3. Ignition "ON." 4. Check the MAF sensor signal circuit between the PCM and the MAF sensor for an open, short to ground, or short to the MAF ground circuit. Is the action complete?	—	Verify repair	Go to *Step 13*
11	Locate and repair the open in the ground circuit to the MAF sensor. Is the action complete?	—	Verify repair	—
12	Locate and repair the open in the ignition feed circuit to the MAF sensor. Is the action complete?	—	Verify repair	—
13	Replace the MAF sensor. Is the action complete?	—	Verify repair	Go to *Step 14*
14	Replace the PCM. **IMPORTANT:** The replacement PCM must be programmed. Refer to *On-Vehicle Service* in *Powertrain Control Module and Sensors* for procedures. And also refer to latest Service Bulletin. Check to see if the Latest software is released or not. And then Down Load the LATEST PROGRAMMED SOFTWARE to the replacement PCM. Is the action complete?	—	Verify repair	—

Downloaded from www.Manualslib.com manuals search engine

Diagnostic Trouble Code (DTC) P0103 MAF Sensor Circuit High Frequency

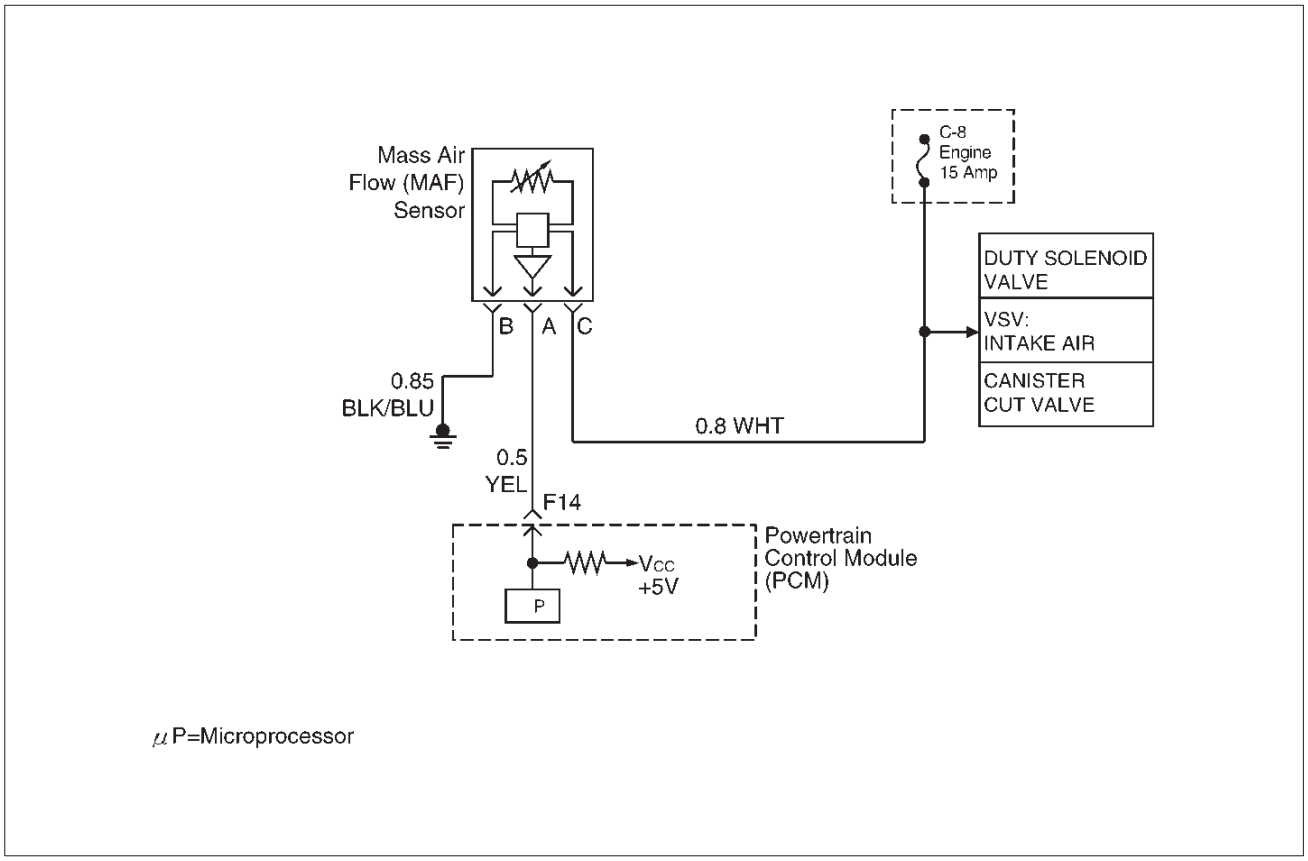

D06RY00164

Circuit Description

The mass air flow (MAF) sensor measures the amount of air which passes through it into the engine during a given time. The powertrain control module (PCM) uses the mass air flow information to monitor engine operating conditions for fuel delivery calculations. A large quantity of air entering the engine indicates an acceleration or high load situation, while a small quantity of air indicates deceleration or idle.

The MAF sensor produces a frequency signal which can be monitored using a Tech 2. The frequency will vary within a range of around 4 to 7g/s at idle to around 25 to 40 g/s at maximum engine load. DTC P0103 will be set if the signal from the MAF sensor is above the possible range of a normally operating MAF sensor.

Conditions for Setting the DTC

- The engine is running above 500 RPM for more than 10 seconds.
- System voltage is above 11.5 volts.
- MAF signal frequency is above 40g/s for a total of 50 percent of the last 200 samples monitored. A sample is taken every cylinder event.

Action Taken When the DTC Sets

- The PCM will illuminate the malfunction indicator lamp (MIL) the first time the fault is detected.
- The PCM calculates an airflow value based on idle air control valve position, throttle position, RPM and barometric pressure.
- The PCM will store conditions which were present when the DTC was set as Freeze Frame and in the Failure Records data.

Conditions for clearing the MIL/DTC

- The PCM will turn the MIL “OFF” on the third consecutive trip cycle during which the diagnostic has been run and the fault condition is no longer present.
- A history DTC P0103 will clear after 40 consecutive warm-up cycles have occurred without a fault.
- DTC P0103 can be cleared by using the Tech 2 “Clear Info” function or by disconnecting the PCM battery feed.

Diagnostic Aids

If DTC P0103 cannot be duplicated, the information included in the Failure Records data can be useful in determining vehicle mileage since the DTC was last set.

Downloaded from www.Manualslib.com manuals search engine

Test Description

Number(s) below refer to the step number(s) on the Diagnostic Chart.

2. This step verifies that the problem is present at idle.

4. A frequency reading with the MAF sensor connector disconnected indicates an electromagnetic interfernce (EMI) related fault.

8. This vehicle is equipped with a PCM which utilizes an electrically erasable programmable read only memory (EEPROM). When the PCM is being replaced, the new PCM must be programmed. Refer to *PCM Replacement and Programming Procedures* in *Powertrain Control Module (PCM) and Sensor*.

Downloaded from www.Manualslib.com manuals search engine

DTC P0103 – MAF Sensor Circuit High Frequency

Step	Action	Value(s)	Yes	No
1	Was the “On-Board Diagnostic (OBD) System Check” performed?	—	Go to *Step 2*	Go to *OBD System Check*
2	1. Ignition “ON,” engine “OFF.” 2. Review and record Tech 2 Failure Records data. 3. Operate the vehicle within Failure Records conditions as noted. 4. Using a Tech 2, monitor “DTC” info for DTC P0103. Does the Tech 2 indicate DTC P0103 failed this ignition?	—	Go to *Step 3*	Refer to *Diagnostic Aids*
3	1. Start the engine. 2. With the engine idling, monitor “MAF Frequency” display on the Tech 2. Is “MAF Frequency” above the specified value?	40g/s	Go to *Step 4*	Go to *Step 7*
4	1. Ignition “OFF.” 2. Disconnect the MAF sensor connector. 3. Ignition “ON,” engine idling. 4. Using a Tech 2, monitor “MAF Frequency.” Does the Tech 2 indicate a “MAF Frequency” at the specified value?	0g/s	Go to *Step 5*	Go to *Step 6*
5	Replace the MAF sensor. Is the action complete?	—	Verify repair	Go to *Step 8*
6	1. Check the MAF harness for incorrect routing near high voltage components (solenoids, relays, motors). 2. If incorrect routing is found, correct the harness routing. Was a problem found?	—	Verify repair	Go to *Step 6*
7	1. With the engine idling, monitor “MAF Frequency” display on the Tech 2. 2. Quickly snap open throttle to wide open throttle while under a road load and record value. Does the Tech 2 indicate “MAF Frequency” above the specified value?	40g/s	Go to *Step 5*	Go to *Step 8*
8	Replace the PCM. **IMPORTANT:** The replacement PCM must be programmed. Refer to *On-Vehicle Service* in *Powertrain Control Module and Sensors* for procedures. And also refer to latest Service Bulletin. Check to see if the Latest software is released or not. And then Down Load the LATEST PROGRAMMED SOFTWARE to the replacement PCM. Is the action complete?	—	Verify repair	—

Downloaded from www.Manualslib.com manuals search engine

Diagnostic Trouble Code (DTC) P0106 MAP System Performance

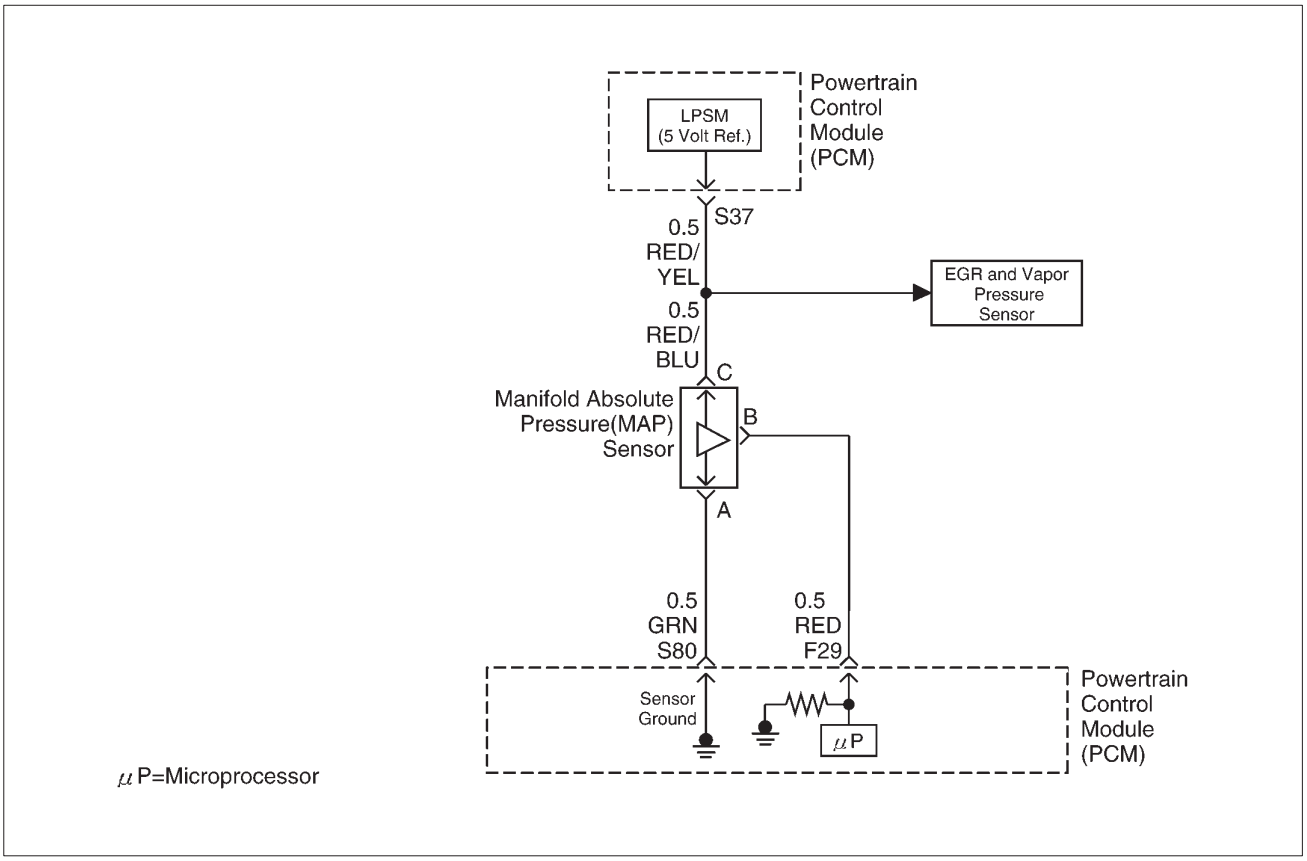

D06RY00165

Circuit Description

The manifold absolute pressure (MAP) sensor responds to changes in intake manifold pressure (vacuum). The MAP sensor signal voltage to the powertrain control module (PCM) varies from below 2 volts at idle (high vacuum) to above 4 volts at wide-open throttle (low vacuum) at sea level.

The MAP sensor is used to determine: manifold pressure changes while the linear exhaust gas recirculation (EGR) flow test diagnostic is being run (refer to DTC P0401), engine vacuum level for some other diagnostics, and barometric pressure (BARO). The PCM compares the MAP sensor signal to a calculated MAP based on throttle position and various engine load factor. If the PCM detects a MAP signal that varies excessively above or below the calculated value, DTC P0106 will set.

Conditions for Setting the DTC

- No TP sensor DTCs are present.
- Engine speed is steady, changing less then 100 RPM.
- Throttle position is steady, throttle angle changes less than 1%.
- EGR flow rate is steady, changing less than 4%.
- No change in brake switch, A/C clutch, TCC or power steering pressure switch status.
- Above conditions are met for longer than 1 second.
- Actual MAP value varies more than 10 kPa.
- The MAP value must vary for a total of 10 seconds over a 20-second period of time that the samples were monitored.
- The failure must occur for 2 consecutive trips.

Action Taken When the DTC Sets

- The PCM will illuminate the malfunction indicator lamp (MIL) after the second consecutive trip in which the fault is detected.
- The PCM will default to a BARO value of 79.3 kPa.
- The PCM will store conditions which were present when the DTC was set as Freeze Frame and in the Failure Records data.

Conditions for Clearing the MIL/DTC

- The PCM will turn the MIL “OFF” on the third consecutive trip cycle during which the diagnostic has been run and the fault condition is no longer present.
- A history DTC P0106 will clear after 40 consecutive warm-up cycles have occurred without a fault.
- DTC P0106 can be cleared by using the Tech 2 “Clear Info” function or by disconnecting the PCM battery feed.

Diagnostic Aids

Check for the following conditions:

- Poor connection at PCM – Inspect harness connectors for backed-out terminals, improper mating, broken locks, improperly formed or damaged terminals, and poor terminal-to-wire connection.

Downloaded from www.Manualslib.com manuals search engine

- Damaged harness – Inspect the wiring harness for damage. If the harness appears to be OK, observe the MAP display on the Tech 2 while moving connectors and wiring harnesses related to the sensor. A change in the display will indicate the location of the fault.

If DTC P0106 cannot be duplicated, the information included in the Failure Records data can be useful in determining vehicle mileage since the DTC was last set. If it is determined that the DTC occurs intermittently, performing the DTC P1107 Diagnostic Chart may isolate the cause of the fault.

DTC P0106 – MAP System Performance

Step	Action	Value(s)	Yes	No
1	Was the "On-Board Diagnostic (OBD) System Check" performed?	—	Go to *Step 2*	Go to *OBD System Check*
2	1. Ignition "ON," engine "OFF." 2. Review and record Tech 2 Failure Records data. 3. Operate the vehicle within Failure Records conditions as noted. 4. Using a Tech 2, monitor "DTC" info for DTC P0106. Does the Tech 2 indicate DTC P0106 failed?	—	Go to *Step 4*	Go to *Step 3*
3	1. Check for the following conditions: • Vacuum hoses disconnected, damaged, or incorrectly routed; • Intake manifold vacuum leaks; • Vacuum leaks at throttle body; • Vacuum leaks at EGR valve flange and pipes; • Crankcase ventilation valve faulty, missing or incorrectly installed. 2. If a problem is found, repair as necessary. Was a problem found?	—	Verify repair	Refer to *Diagnostic Aids*
4	1. Disconnect the MAP sensor electrical connector. 2. Observe the MAP value displayed on the Tech 2. Is the MAP value near the specified value?	11 kPa	Go to *Step 5*	Go to *Step 13*
5	1. Connect a test light between B+ and the MAP sensor signal circuit at the MAP sensor harness connector. 2. Observe the MAP value displayed on the Tech 2. Is the MAP value near the specified value?	105 kPa	Go to *Step 6*	Go to *Step 9*
6	1. Jumper the 5 volt reference circuit and the MAP signal circuit together at the MAP sensor harness connector. 2. Observe the MAP value displayed on the Tech 2. Is the MAP value near the specified value?	104 kPa	Go to *Step 7*	Go to *Step 8*
7	1. Ignition "OFF." 2. Disconnect the PCM and check the sensor ground circuit for high resistance, an open between the PCM and the MAP sensor, or for a poor connection at the PCM. 3. If a problem is found, repair as necessary. Was a problem found?	—	Verify repair	Go to *Step 11*

Downloaded from www.Manualslib.com manuals search engine

DTC P0106 – MAP System Performance (Cont'd)

Step	Action	Value(s)	Yes	No
8	1. Check the 5 volt reference circuit for high resistance, an open between the PCM and the MAP sensor, or a poor connection at the PCM. 2. If a problem is found, repair as necessary. Was a problem found?	—	Verify repair	Go to *Step 10*
9	1. Ignition "OFF." 2. Disconnect the PCM, and check the MAP sensor signal circuit for high resistance, an open, a short to ground, or a short to the sensor ground circuit. 3. If a problem is found, repair as necessary. Was a problem found?	—	Verify repair	Go to *Step 10*
10	1. Check the MAP sensor signal circuit for a poor connection at the PCM. 2. If a problem is found, repair as necessary. Did the terminal require replacement?	—	Verify repair	Go to *Step 14*
11	1. Check for a poor connection at the MAP sensor. 2. If a problem is found, repair as necessary. Was a problem found?	—	Verify repair	Go to *Step 12*
12	Replace the MAP sensor. Is the action complete?	—	Verify repair	—
13	1. Ignition "OFF," disconnected the PCM. 2. Ignition "ON," check the MAP signal circuit for a short to voltage or a short to the 5 volt reference circuit. 3. If a problem is found, repair as necessary. Was a problem found?	—	Verify repair	Go to *Step 14*
14	Replace the PCM. **IMPORTANT:** The replacement PCM must be programmed. Refer to *On-Vehicle Service* in *Powertrain Control Module and Sensors* for procedures. And also refer to latest Service Bulletin. Check to see if the Latest software is released or not. And then Down Load the LATEST PROGRAMMED SOFTWARE to the replacement PCM. Is the action complete?	—	Verify repair	—

Downloaded from www.Manualslib.com manuals search engine

Diagnostic Trouble Code (DTC) P0107 MAP Sensor Circuit Low Voltage

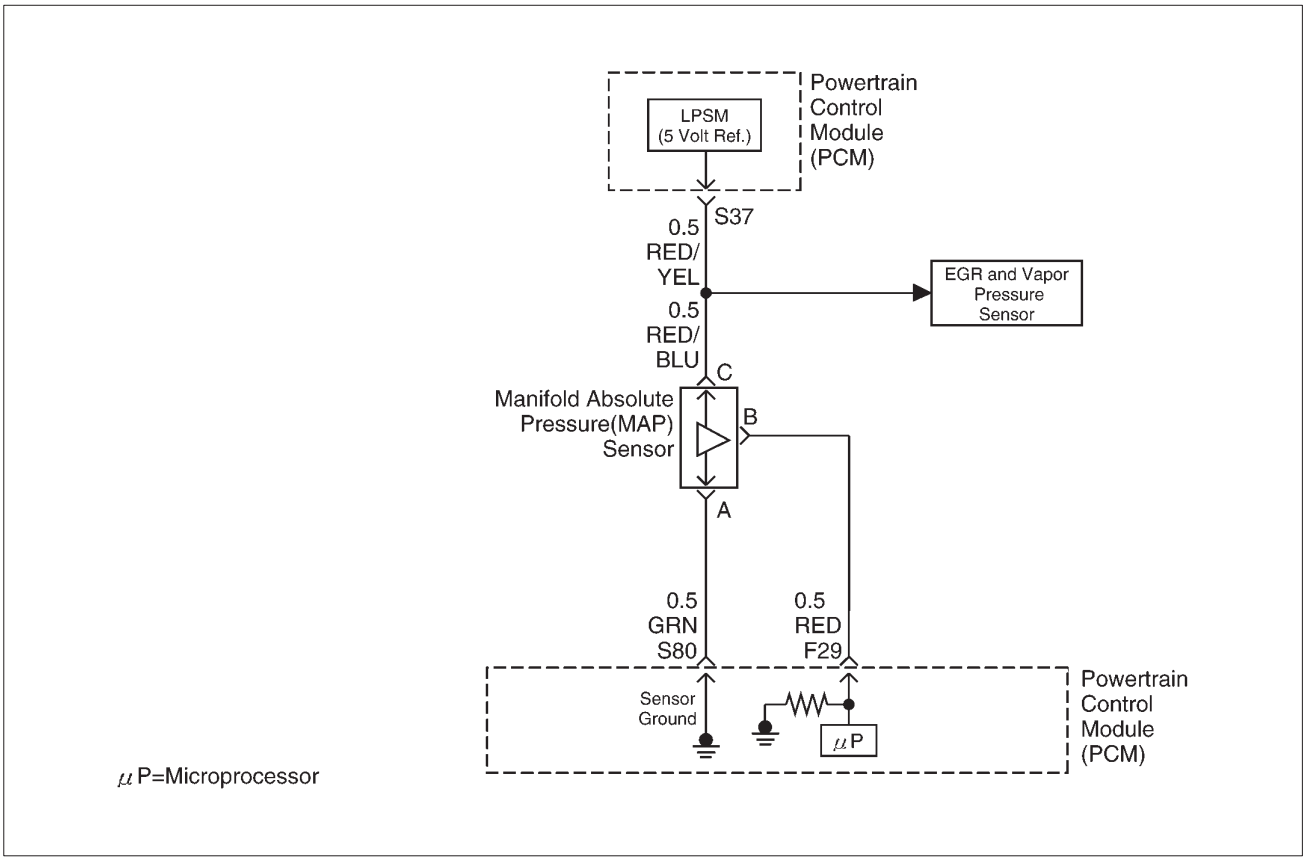

D06RY00165

Circuit Description

The manifold absolute pressure (MAP) sensor responds to changes in intake manifold pressure (vacuum). The MAP sensor signal voltage to the powertrain control module (PCM) varies from below 2 volts at idle (high vacuum) to above 4 volts with the ignition "ON," engine not running or at wide-open throttle (low vacuum).

The MAP sensor is used to determine manifold pressure changes while the exhaust gas recirculation (EGR) flow test diagnostic is being run (refer to *DTC P0401*), to determine engine vacuum level for some other diagnostics and to determine barometric pressure (BARO). The PCM monitors the MAP signals for voltages outside the normal range of the MAP sensor. If the PCM detects a MAP signal voltage that is excessively low, DTC P0107 will be set.

Conditions for Setting the DTC

- No TP sensor DTCs present.
- Engine is running.
- Throttle angle is above 1% if engine speed is less than 1000 RPM.
- Throttle angle is above 2% if engine speed is above 1000 RPM.
- The MAP sensor indicates manifold absolute pressure at or below 11 kPa for a total of approximately 10 seconds over a 16-second period.
- Ignition voltage more than 11 volts.

Action Taken When the DTC Sets

- The PCM will illuminate the malfunction indicator lamp (MIL) the first time the fault is detected.
- The PCM will default to a BARO value of 79.3 kPa.
- The PCM will store conditions which were present when the DTC was set as Freeze Frame and in the Failure Records data.

Conditions for Clearing the MIL/DTC

- The PCM will turn the MIL "OFF" on the third consecutive trip cycle during which the diagnostic has been run and the fault condition is no longer present.
- A history DTC P0107 will clear after 40 consecutive warm-up cycles have occurred without a fault.
- DTC P0107 can be cleared by using the Tech 2 "Clear Info" function or by disconnecting the PCM battery feed.

Diagnostic Aids

Check for the following conditions:

- Check for intermittent codes.
- The MAP sensor shares a 5 Volt reference with the Fuel Tank Pressure Sensor. If these codes are also set, it could indicate a problem with the 5 Volt reference circuit .
- The MAP sensor shares a ground with the Fuel Tank Pressure Sensor, the ECT sensor, and the Transmission Fluid Temperature sensor.
- Poor connection at PCM – Inspect harness connectors for backed-out terminals, improper mating, broken

Downloaded from www.Manualslib.com manuals search engine

locks, improperly formed or damaged terminals, and poor terminal-to-wire connection.

- Damaged harness – Inspect the wiring harness for damage. If the harness appears to be OK, observe the MAP display on the Tech 2 while moving connectors and wiring harnesses related to the sensor. A change in the display will indicate the location of the fault.

If DTC P0107 cannot be duplicated, the information included in the Failure Records data can be useful in determining vehicle mileage since the DTC was last set. If it is determined that the DTC occurs intermittently, performing the DTC P0107 Diagnostic Chart may isolate the cause of the fault.

DTC P0107 – MAP Sensor Circuit Low Voltage

Step	Action	Value(s)	Yes	No
1	Was the "On-Board Diagnostic (OBD) System Check" performed?	—	Go to *Step 2*	Go to *OBD System Check*
2	1. Ignition "ON," engine "OFF." 2. With the throttle closed, observe the MAP value displayed on the Tech 2. Is the MAP value near the specified value?	0 V 11 kPa at sea level	Go to *Step 4*	Go to *Step 3*
3	1. Ignition "ON," engine "OFF." 2. Review and record Tech 2 Failure Records data. 3. Operate the vehicle within Failure Records conditions as noted. 4. Using a Tech 2, monitor "DTC" info for DTC P0107. Does the Tech 2 indicate DTC P0107 failed?	—	Go to *Step 4*	Refer to *Diagnostic Aids*
4	1. Ignition "OFF." 2. Disconnect the MAP sensor electrical connector. 3. Jumper the 5 volt reference circuit and the MAP signal together at the MAP sensor harness connector. 4. Ignition "ON." 5. Observe the MAP value displayed on the Tech 2. Is the MAP value near the specified value? (If no, start with diagnosis chart for other sensors in the circuit and see if 5V returns.)	5 V 104 kPa	Go to *Step 10*	Go to *Step 5*
5	1. Disconnect the jumper. 2. Connect a test light between B+ and the MAP sensor signal circuit at the MAP sensor harness connector. 3. Observe the MAP value displayed on the Tech 2. Is the MAP value near the specified value.	5 V 104 kPa	Go to *Step 6*	Go to *Step 8*
6	1. Ignition "OFF." 2. Disconnect the PCM and check the 5 volt reference circuit for an open or short to ground. 3. If the 5 volt reference circuit is open or shorted to ground, repair it as necessary. Was the 5 volt reference circuit open or shorted to ground?	—	Verify repair	Go to *Step 7*
7	Check the 5 volt reference circuit for a poor connection at the PCM and replace the terminal if necessary. Did the terminal require replacement?	—	Verify repair	Go to *Step 11*

Downloaded from www.Manualslib.com manuals search engine

DTC P0107 – MAP Sensor Circuit Low Voltage (Cont'd)

Step	Action	Value(s)	Yes	No
8	1. Ignition "OFF." 2. Disconnect the PCM, and check the MAP signal circuit for an open, short to ground, or short to the sensor ground circuit. 3. If the MAP sensor signal circuit is open or shorted to ground, repair it as necessary. Was the MAP signal circuit open or shorted to ground?	—	Verify repair	Go to *Step 9*
9	Check the MAP sensor signal circuit for a poor connection at the PCM and the MAP sensor; replace the terminal if necessary. Did the terminal require replacement?	—	Verify repair	Go to *Step 11*
10	Replace the MAP sensor. Is the action complete?	—	Verify repair	—
11	Replace the PCM. **IMPORTANT:** The replacement PCM must be programmed. Refer to *On-Vehicle Service* in *Powertrain Control Module and Sensors* for procedures. And also refer to latest Service Bulletin. Check to see if the Latest software is released or not. And then Down Load the LATEST PROGRAMMED SOFTWARE to the replacement PCM. Is the action complete?	—	Verify repair	—

Downloaded from www.Manualslib.com manuals search engine

Diagnostic Trouble Code (DTC) P0108 MAP Sensor Circuit High Voltage

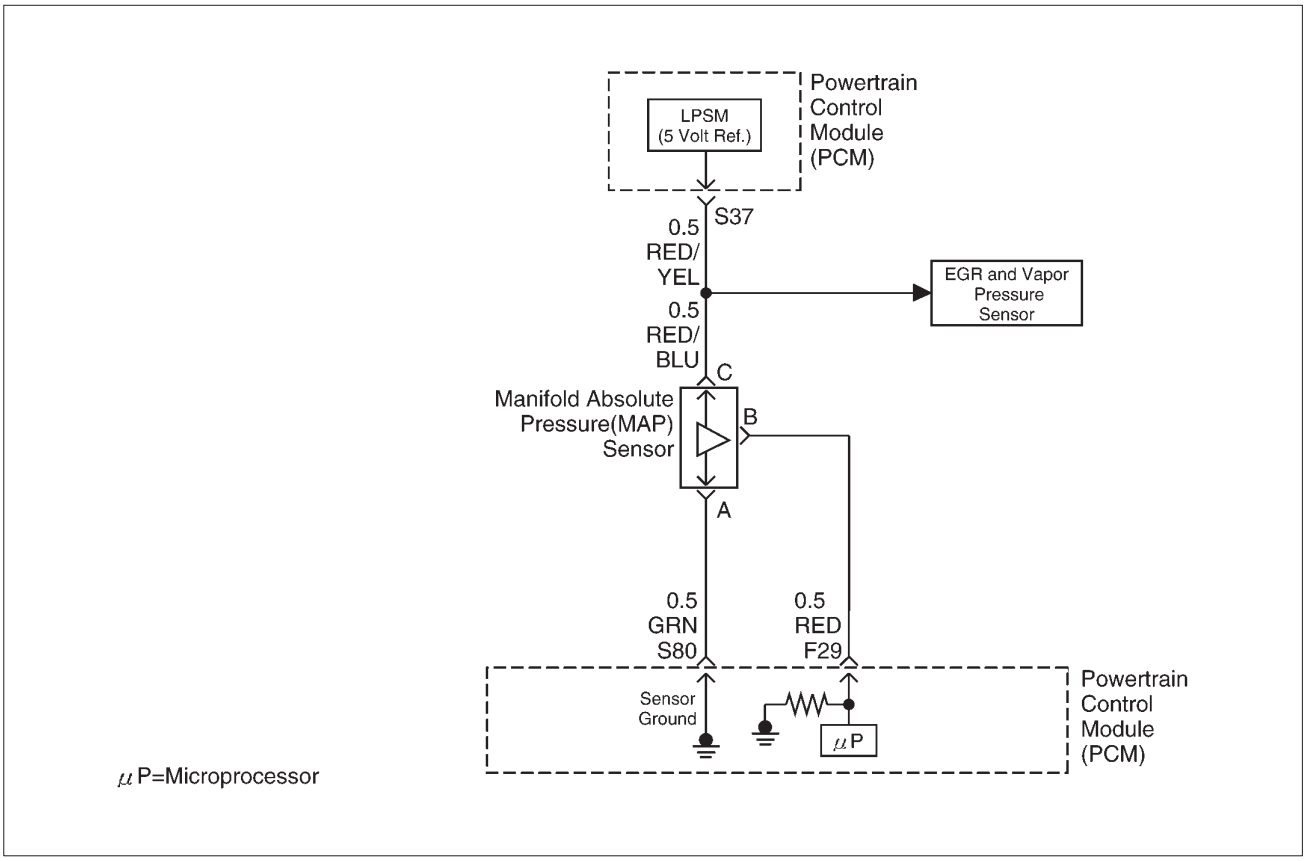

D06RY00165

Circuit Description

The manifold absolute pressure (MAP) sensor responds to changes in intake manifold pressure (vacuum). The MAP sensor signal voltage to the powertrain control module (PCM) varies from below 2 volts at idle (high vacuum) to above 4 volts with the key "ON," engine not running or at wide-open throttle (low vacuum).

The MAP sensor is used to determine manifold pressure changes while the linear EGR flow test diagnostic is being run (refer to *DTC P0401*), to determine engine vacuum level for some other diagnostics and to determine barometric pressure (BARO). The PCM monitors the MAP signals for voltages outside the normal range of the MAP sensor. If the PCM detects a MAP signal voltage that is excessively high, DTC P0108 will be set.

Conditions for Setting the DTC

- No TP sensor DTCs present.
- Engine is running for more than 10 seconds.
- Throttle position is below 3% if engine speed is below 1000 RPM.
- Throttle position is below 10% if engine speed is above 1000 RPM.
- The MAP sensor indicates an intermittent manifold absolute pressure above 80 kPa for a total of approximately 10 seconds over a 16-second period.

Action Taken When the DTC Sets

- The PCM will illuminate the malfunction indicator lamp (MIL) the first time the fault is detected.
- The PCM will default to a BARO value of 79.3 kPa.
- The PCM will store conditions which were present when the DTC was set as Freeze Frame and in the Failure Records data.

Conditions for Clearing the MIL/DTC

- The PCM will turn the MIL "OFF" on the third consecutive trip cycle during which the diagnostic has been run and the fault condition is no longer present.
- A history DTC P0108 will clear after 40 consecutive warm-up cycles have occurred without a fault.
- DTC P0108 can be cleared by using the Tech 2 "Clear Info" function or by disconnecting the PCM battery feed.

Diagnostic Aids

Check for the following conditions:

- The MAP sensor shares a 5 Volt reference with the Fuel Tank Pressure Sensor. If these codes are also set, it could indicate a problem with the 5 Volt reference circuit.
- The MAP sensor shares a ground with the Fuel Tank Pressure Sensor (Vapor Pressure Sensor), the ECT sensor, and the Transmission Fluid Temperature sensor.
- Poor connection at PCM – Inspect harness connectors for backed-out terminals, improper mating, broken locks, improperly formed or damaged terminals, and poor terminal-to-wire connection.

Downloaded from www.Manualslib.com manuals search engine

- Damaged harness – Inspect the wiring harness for damage. If the harness appears to be OK, observe the MAP display on the Tech 2 while moving connectors and wiring harnesses related to the sensor. A change in the display will indicate the location of the fault.

If DTC P0108 cannot be duplicated, the information included in the Failure Records data can be useful in determining vehicle mileage since the DTC was last set. If it is determined that the DTC occurs intermittently, performing the DTC P1108 Diagnostic Chart may isolate the cause of the fault.

DTC P0108 – MAP Sensor Circuit High Voltage

Step	Action	Value(s)	Yes	No
1	Was the "On-Board Diagnostic (OBD) System Check" performed?	—	Go to *Step 2*	Go to *OBD System Check*
2	1. If the engine idle is rough, unstable or incorrect, repair the idle problem before using this chart. Refer to *Symptoms* section. 2. With the engine idling, note the MAP value on the Tech 2. Is the MAP reading above the specified value?	90 kPa	Go to *Step 4*	Go to *Step 3*
3	1. Ignition "ON," engine "OFF." 2. Review and record Tech 2 Failure Records data. 3. Operate the vehicle within Failure Records conditions as noted. 4. Using a Tech 2, monitor "DTC" info for DTC P0108. Does the Tech 2 indicate DTC P0108 failed this ignition?	—	Go to *Step 4*	Refer to *Diagnostic Aids*
4	1. Ignition "OFF." 2. Disconnect the MAP sensor electrical connector. 3. Ignition "ON." 4. Note the MAP sensor voltage displayed on the Tech 2. (If no, start with diagnostic chart for other sensors in the circuit and see if 5V returns.) Is the MAP sensor voltage at the specified value?	11 kPa 0.0 V	Go to *Step 5*	Go to *Step 6*
5	Probe the sensor ground circuit with a test light to B+. Is the test light "ON?"	—	Go to *Step 7*	Go to *Step 9*
6	1. Check the MAP signal circuit for a short to voltage or a short to the 5 volt reference circuit. 2. If the MAP sensor signal circuit is shorted, repair circuit as necessary. Was the MAP sensor signal circuit shorted?	—	Verify repair	Go to *Step 11*
7	1. Check for a poor sensor ground terminal connection at the MAP sensor electrical connector. 2. If a problem if found, replace the faulty terminal. Did the terminal require replacement?	—	Verify repair	Go to *Step 8*
8	Check for a plugged or leaking vacuum supply to the MAP sensor. Is the vacuum supply plugged or leaking?	—	Verify repair	Go to *Step 12*
9	1. Check for a poor sensor ground terminal connection at the PCM. 2. If a problem is found, replace the faulty terminal. Did the terminal require replacement?	—	Verify repair	Go to *Step 10*

Downloaded from www.Manualslib.com manuals search engine

DTC P0108 – MAP Sensor Circuit High Voltage (Cont'd)

Step	Action	Value(s)	Yes	No
10	1. Check the continuity of the MAP sensor ground circuit. 2. If the MAP sensor ground circuit measures over 5 ohms, repair open or poor connection. Was a condition found and corrected?	—	Verify repair	Go to *Step 11*
11	Replace the PCM. **IMPORTANT:** The replacement PCM must be programmed. Refer to *On-Vehicle Service* in *Powertrain Control Module and Sensors* for procedures. And also refer to latest Service Bulletin. Check to see if the Latest software is released or not. And then Down Load the LATEST PROGRAMMED SOFTWARE to the replacement PCM. Is the action complete?	—	Verify Repair	—
12	Replace the MAP sensor. Is the action complete?	—	Verify repair	—

Downloaded from www.Manualslib.com manuals search engine

Diagnostic Trouble Code (DTC) P0112 IAT Sensor Circuit Low Voltage

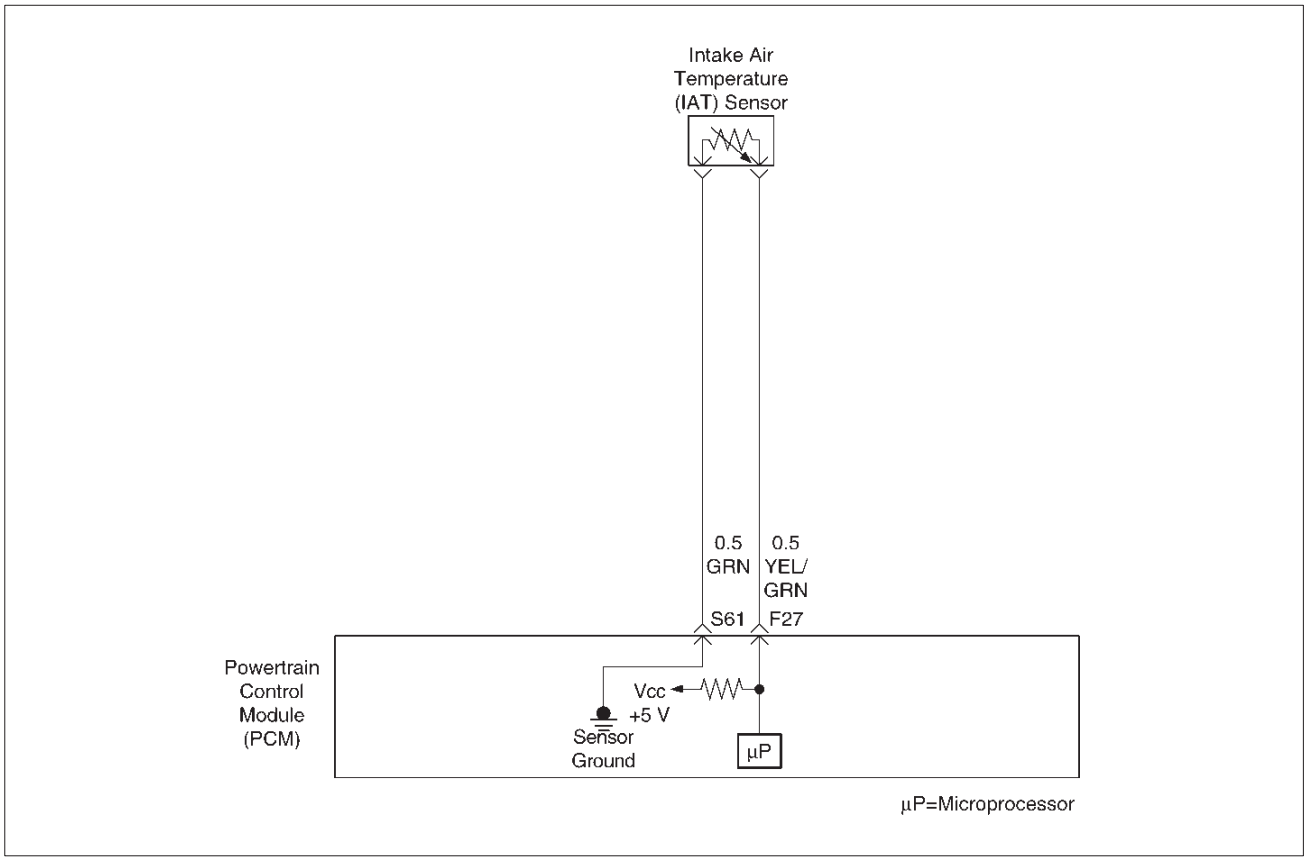

D06RY00168

Circuit Description

The intake air temperature (IAT) sensor is a thermistor which measures the temperature of the air entering the engine. The powertrain control module (PCM) applies 5 volts through a pull-up resistor to the IAT sensor. When the intake air is cold, the sensor resistance is high and the PCM will monitor a high signal voltage on the IAT signal circuit. If the intake air is warm, the sensor resistance is lower, causing the PCM to monitor a lower voltage. DTC P0112 will set when the PCM detects an excessively low signal voltage on the intake air temperature sensor signal circuit.

Conditions for Setting the DTC

- The engine has been running for over 2 minutes.
- Vehicle speed is greater than 30 mph (48 km/h) .
- IAT signal voltage indicates and intake air temperature greater than 148˚C (298˚F) (about 5 volts) for a total of 12.5 seconds over a 25-second period of time.

Action Taken When the DTC Sets

- The PCM will illuminate the malfunction indicator lamp (MIL) the first time the fault is detected.
- The PCM will store conditions which were present when the DTC was set as Freeze Frame and in the Failure Records data.

Conditions for Clearing the MIL/DTC

- The PCM will turn the MIL “OFF” on the third consecutive trip cycle during which the diagnostic has been run and the fault condition is no longer present.
- A history DTC P0112 will clear after 40 consecutive warm-up cycles have occurred without a fault.
- DTC P0112 can be cleared by using the Tech 2 “Clear Info” function or by disconnecting the PCM battery feed.

Diagnostic Aids

Check for the following conditions:

- Poor connection at PCM – Inspect harness connectors for backed-bout terminals, improper mating, broken locks, improperly formed or damaged terminals, and poor terminal-to-wire connection.
- Damaged harness – Inspect the wiring harness for damage. If the harness appears to be OK, observe the IAT display on the Tech 2 while moving connectors and wiring harnesses related to the IAT sensor. A change in the IAT display will indicate the location of the fault.

If DTC P0112 cannot be duplicated, the information included in the Failure Records data can be useful in determining vehicle mileage since the DTC was last set.

Downloaded from www.Manualslib.com manuals search engine

Test Description

Number(s) below refer to the step number(s) on the Diagnostic Chart:

2. Verifies that the fault is present.

3. If DTC P0112 can be repeated only by duplicating the Failure Records condition, refer to the *Temperature vs. Resistance Value* table. The table may be used to test the IAT sensor at various temperatures to evaluate the possibility of a "shifted" sensor that may be stored above or below a certain temperature. If this is the case, replace the IAT sensor. If the IAT sensor appears to be OK, the fault is intermittent; refer to *Diagnostic Aids*.

Intake Air Temperature Sensor

˚C	˚F	OHMS
Temperature vs. Resistance Values (approximate)		
100	212	177
80	176	332
60	140	667
45	113	1188
35	95	1802
25	77	2796
15	59	4450
5	41	7280
–5	23	12300
–15	5	21450
–30	–22	52700
–40	–40	100700

Downloaded from www.Manualslib.com manuals search engine

DTC P0112–IAT Sensor Circuit Low Voltage

Step	Action	Value(s)	Yes	No
1	Was the “On-Board Diagnostic (OBD) System Check” performed?	—	Go to *Step 2*	Go to *OBD System Check*
2	1. Ignition “ON,” engine “OFF.” 2. Using a Tech 2, monitor the intake air temperature (IAT). Is the intake air temperature greater than the specified value?	148˚C (283˚F)	Go to *Step 4*	Go to *Step 3*
3	1. Ignition “ON,” engine “OFF.” Review and record Tech 2 Failure Records data. 2. Operate the vehicle within Failure Records conditions as noted. 3. Using a Tech 2, monitor the “DTC” info for DTC P0112. Does the Tech 2 indicate DTC P0112 failed this ignition?	—	Refer to *Test Description*	Refer to *Diagnostic Aids*
4	1. Ignition “OFF.” 2. Disconnect the IAT sensor electrical connector. 3. Ignition “ON.” 4. Observe the intake air temperature on the Tech 2. Is the intake air temperature below the specified value?	–38˚C (–36˚F)	Go to *Step 6*	Go to *Step 5*
5	1. Ignition “OFF.” 2. Disconnect the PCM electrical connectors. 3. Check the IAT sensor signal circuit for a short to ground. Is the IAT sensor signal circuit shorted to ground?	—	Verify repair	Go to *Step 7*
6	Replace the IAT sensor. Is the action complete?	—	Verify repair	—
7	Replace the PCM. **IMPORTANT:** The replacement PCM must be programmed. Refer to *On-Vehicle Service* in *Powertrain Control Module and Sensors* for procedures. And also refer to latest Service Bulletin. Check to see if the Latest software is released or not. And then Down Load the LATEST PROGRAMMED SOFTWARE to the replacement PCM. Is the action complete?	—	Verify repair	—

Downloaded from www.Manualslib.com manuals search engine

Diagnostic Trouble Code (DTC) P0113 IAT Sensor Circuit High Voltage

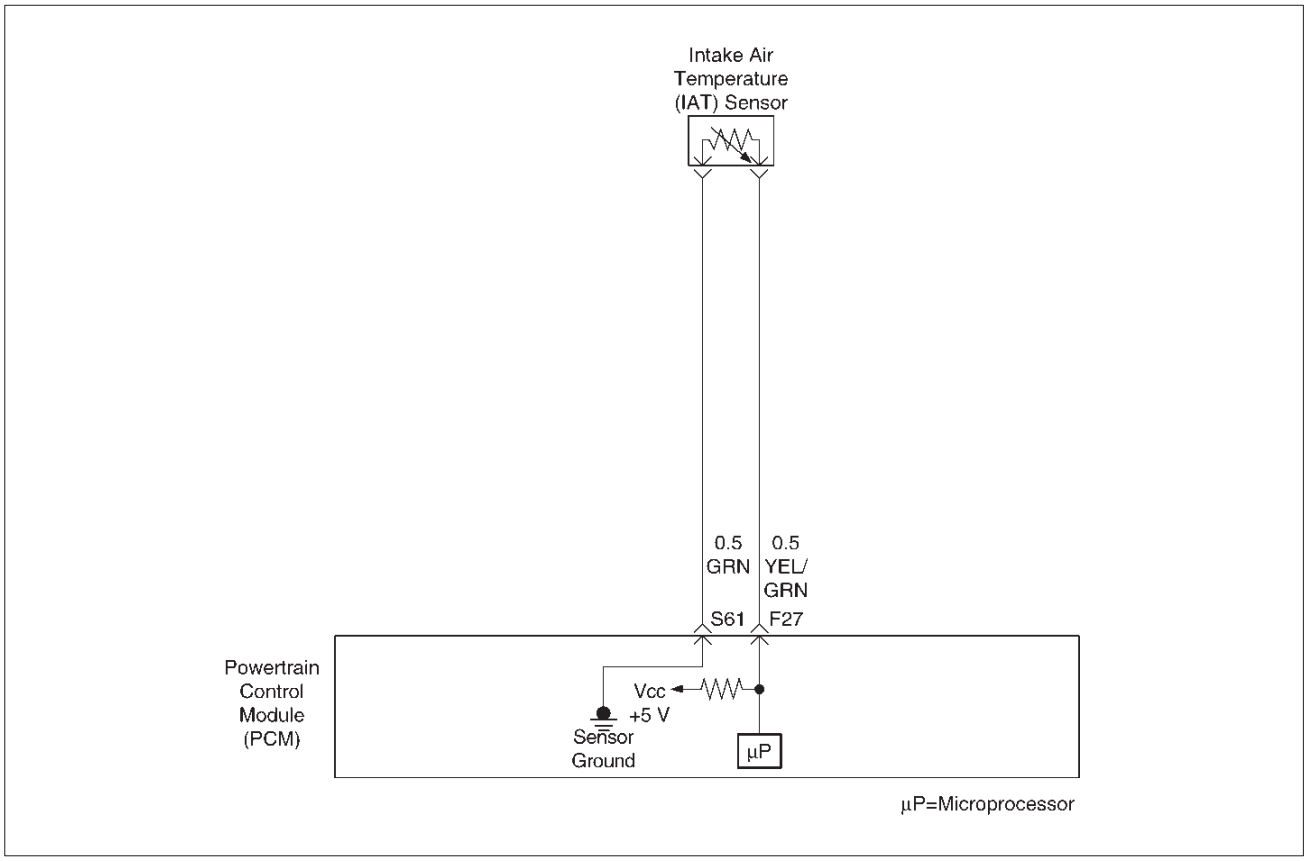

D06RY00168

Circuit Description

The intake air temperature (IAT) sensor is a thermistor which measures the temperature of the air entering the engine. The powertrain control module (PCM) applies 5 volts through a pull-up resistor to the IAT sensor. When the intake air is cold, the sensor resistance is high and the PCM will monitor a high signal voltage on the IAT signal circuit. If the intake air is warm, the sensor resistance is lower causing the PCM to monitor a lower voltage. DTC P0113 will set when the PCM detects an excessively high signal voltage on the intake air temperature sensor signal circuit.

Conditions for Setting the DTC

- The engine has been running for over 4 minutes.
- Vehicle speed is less than 20 mph (32 km/h).
- ECT signal temperature is above 60˚C (140˚F).
- Mass air flow is less then 20 g/second.
- IAT signal voltage indicates an intake air temperature less than –39˚C (–38˚F) for total of 12.5 seconds over a 25-second period.

Action Taken When the DTC Sets

- The PCM will illuminate the malfunction indicator lamp (MIL) the first time the fault is detected.
- The PCM will store conditions which were present when the DTC was set as Freeze Frame and in the Failure Records data.

Conditions for Clearing the MIL/DTC

- The PCM will turn the MIL “OFF” on the third consecutive trip cycle during which the diagnostic has been run and the fault condition is no longer present.
- A history DTC P0113 will clear after 40 consecutive warm-up cycles have occurred without a fault.
- DTC P0113 can be cleared by using the Tech 2 “Clear Info” function or by disconnecting the PCM battery feed.

Diagnostic Aids

Check for the following conditions:

- The IAT sensor shares a ground with the EGR position sensor and the TP sensor. Check the ground if these DTC’s are set.
- Poor connection at PCM – Inspect harness connectors for backed-out terminals, improper mating, broken locks, improperly formed or damaged terminals, and poor terminal-to-wire connection.
- Damaged harness – Inspect the wiring harness for damage. If the harness appears to be OK, observe the IAT display on the Tech 2 while moving connectors and wiring harnesses related to the IAT sensor. A change in the IAT display will indicate the location of the fault.

If DTC P0113 cannot be duplicated, the information included in the Failure Records data can be useful in determining vehicle mileage since the DTC was last set.

Downloaded from www.Manualslib.com manuals search engine

Test Description

Number(s) below refer to the step number(s) on the Diagnostic Chart:

2. Verifies that the fault is present.
3. If DTC P0113 can be repeated only by duplicating the Failure Records conditions, refer to the "Temperature vs. Resistance Values" table. The table may be used to test the IAT sensor at various temperatures to evaluate the possibility of a "shifted" sensor that may be open above or below a certain temperature. If this is the case, replace the IAT sensor. If the IAT sensor appears to be OK, the fault is intermittent; refer to *Diagnostic Aids*.

Intake Air Temperature Sensor

˚C	˚F	OHMS
Temperature vs. Resistance Values (approximate)		
100	212	177
80	176	332
60	140	667
45	113	1188
35	95	1802
25	77	2796
15	59	4450
5	41	7280
–5	23	12300
–15	5	21450
–30	–22	52700
–40	–40	100700

DTC P0113 –IAT Sensor Circuit High Voltage

Step	Action	Value(s)	Yes	No
1	Was the "On-Board Diagnostic (OBD) System Check" performed?	—	Go to *Step 2*	Go to *OBD System Check*
2	Ignition "ON," engine "OFF." Observe the "Intake Air Temp" display on the Tech 2. Is the "Intake Air Temp" below the specified value?	–38˚C (–36˚F)	Go to *Step 4*	Go to *Step 3*
3	1. Ignition "ON," engine "OFF." 2. Review and record Tech 2 Failure Records data parameters. 3. Operate the vehicle within Failure Records conditions as noted. 4. Using a Tech 2, monitor "DTC" info for DTC P0113. Does the Tech 2 indicate DTC P0113 failed?	—	Refer to *Test Description*	Refer to *Diagnostic Aids*
4	1. Ignition "OFF." 2. Disconnect the IAT sensor electrical connector. 3. Jumper the IAT signal circuit and the sensor ground circuit together at the IAT sensor harness connector. 4. Ignition "ON." 5. Observe the "Intake Air Temp" display on the Tech 2. Is the "Intake Air Temp" at the specified value?	140˚C (284˚F)	Go to *Step 6*	Go to *Step 5*
5	1. Jumper the IAT signal circuit at the IAT sensor harness connector to chassis ground. 2. Observe the "Intake Air Temp" display on the Tech 2. Is the "Intake Air Temp" at the specified value?	140˚C (284˚F)	Go to *Step 7*	Go to *Step 8*

Downloaded from www.Manualslib.com manuals search engine

DTC P0113 –IAT Sensor Circuit High Voltage (Cont'd)

Step	Action	Value(s)	Yes	No
6	Check for poor connections at the IAT sensor and replace terminals if necessary. Did any terminals require replacement?	—	Verify repair	Go to *Step 10*
7	1. Ignition "OFF." 2. Disconnect the PCM, and check the IAT sensor ground circuit for an open. 3. If the IAT sensor ground circuit is open, repair it as necessary. Was the IAT sensor ground circuit open?	—	Verify repair	Go to *Step 9*
8	1. Ignition "OFF." 2. Disconnect the PCM, and check the IAT signal circuit for an open. 3. If the IAT sensor signal circuit is open, repair it as necessary. Was the IAT signal circuit open?	—	Verify repair	Go to *Step 9*
9	Check for a poor sensor ground or IAT signal circuit terminal connection at the PCM and replace terminal(s) if necessary. Did any of the terminals need to be replaced?	—	Verify repair	Go to *Step 11*
10	Replace the IAT sensor. Is the action complete?	—	Verify repair	—
11	Replace the PCM. **IMPORTANT:** The replacement PCM must be programmed. Refer to *On-Vehicle Service* in *Powertrain Control Module and Sensors* for procedures. And also refer to latest Service Bulletin. Check to see if the Latest software is released or not. And then Down Load the LATEST PROGRAMMED SOFTWARE to the replacement PCM. Is the action complete?	—	Verify repair	—

Downloaded from www.Manualslib.com manuals search engine

Diagnostic Trouble Code (DTC) P0117 ECT Sensor Circuit Low Voltage

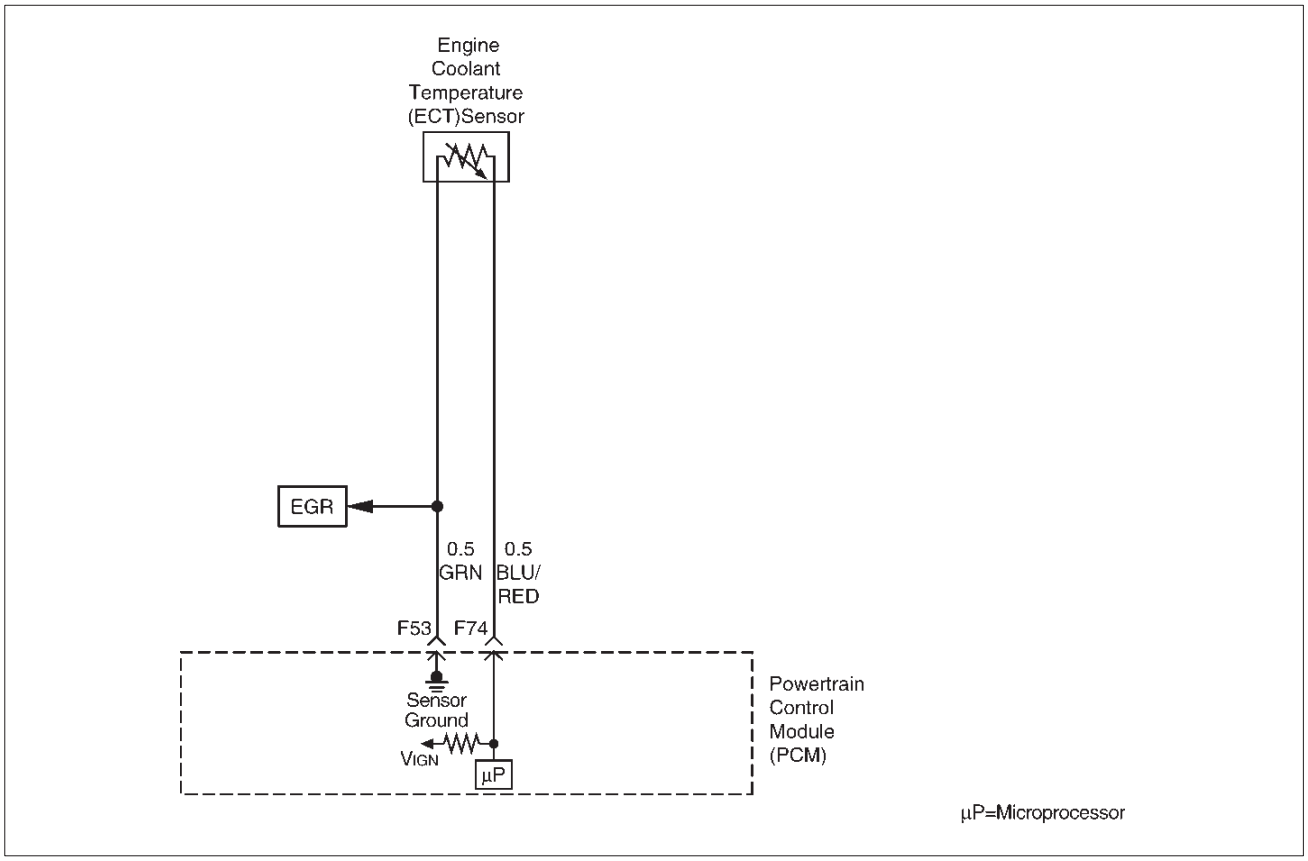

D06RY00169

Circuit Description

The engine coolant temperature (ECT) sensor is a thermistor mounted on a coolant crossover pipe at the front of the engine. The powertrain control module (PCM) applies a voltage (about 5 volts) through a pull-up resistor to the ECT signal circuit. When the engine coolant is cold, the sensor (thermistor) resistance is high, therefore the PCM will measure a high signal voltage. As the engine coolant warms, the sensor resistance becomes lower, and the ECT signal voltage measured at the PCM drops. With a fully warmed-up engine, the ECT signal voltage should measure about 1.5 to 2.0 volts.

Conditions for Setting the DTC

- Engine running time is longer than one minute.
- The ECT sensor signal indicates an engine coolant temperature greater than 150˚C (302˚F) (about 0.10 V) for a total of 50 seconds over a 100–second period.

Action Taken When the DTC Sets

- The PCM will illuminate the malfunction indicator lamp (MIL) the first time the fault is detected.
- The PCM will substitute the ECT reading with a default engine coolant temperature value. The default value is based on start-up intake air temperature and running time.
- The PCM will store conditions which were present when the DTC was set as Freeze Frame and in the Failure Records data.

Conditions for Clearing the MIL/DTC

- The PCM will turn the MIL “OFF” on the third consecutive trip cycle during which the diagnostic has been run and the fault condition is no longer present.
- A history DTC P0117 will clear after 40 consecutive warm-up cycles have occurred without a fault.
- DTC P0117 can be cleared by using the Tech 2 “Clear Info” function or by disconnecting the PCM battery feed.

Diagnostic Aids

Check for the following conditions:

- Poor connection at PCM – Inspect harness connectors for backed-out terminals, improper mating, broken locks, improperly formed or damaged terminals, and poor terminal-to-wire connection.
- Damaged harness – Inspect the wiring harness for damage. If the harness appears to be OK, observe the ECT display on the Tech 2 while moving connectors and wiring harnesses related to the ECT sensor. A change in the ECT display will indicate the location of the fault.

If DTC P0117 cannot be duplicated, the information included in the Failure Records data can be useful in determining vehicle mileage since the DTC was last set. If it is determined that the DTC occurs intermittently, performing the DTC P1114 Diagnostic Chart may isolate the cause of the fault.

Downloaded from www.Manualslib.com manuals search engine

Test Description

Number(s) below refer to the step number(s) on the Diagnostic Chart.

2. Verifies that the fault is present.

3. If DTC P0117 can be repeated only by duplicating the Failure Records conditions, refer to the "Temperature vs. Resistance Values" table. The table may be used to test the ECT sensor at various temperatures to evaluate the possibility of a "shifted" sensor that may be shorted above or below a certain temperature. If this is the case, replace the ECT sensor. If the ECT sensor appears to be OK, the fault is intermittent; refer to *Diagnostic Aids*.

Engine Coolant Temperature Sensor

˚C	˚F	OHMS
Temperature vs. Resistance Values (approximate)		
100	212	177
80	176	332
60	140	667
45	113	1188
35	95	1802
25	77	2796
15	59	4450
5	41	7280
–5	23	12300
–15	5	21450
–30	–22	52700
–40	–40	100700

Downloaded from www.Manualslib.com manuals search engine

DTC P0117 – ECT Sensor Low Voltage

Step	Action	Value(s)	Yes	No
1	Was the “On-Board Diagnostic (OBD) System Check” performed?	—	Go to *Step 2*	Go to *OBD System Check*
2	1. Ignition “ON,” engine “OFF.” 2. Observe the “Eng Cool Temp” display on the Tech 2. Is the “Eng Cool Temp” below the specified value?	139˚C (282˚F)	Go to *Step 4*	Go to *Step 3*
3	1. Ignition “ON,” engine “OFF.” 2. Review and record Tech 2 Failure Records data. 3. Operate the vehicle within Failure Records conditions as noted. 4. Using a Tech 2, monitor “DTC” info for DTC P0117. Does the Tech 2 indicate DTC P0117 failed this ignition?	—	Go to *Step 4*	Refer to *Diagnostic Aids*
4	1. Disconnect the ECT sensor electrical connector. 2. Observe the “Eng Cool Temp” display on the Tech 2. Is the “Eng Cool Temp” at the specified value?	–39˚C (–38˚F)	Go to *Step 6*	Go to *Step 5*
5	1. Ignition “OFF.” 2. Disconnect the PCM and check the ECT signal circuit for a short to ground or a short to the sensor ground circuit. 3. If the ECT signal circuit is shorted. repair it as necessary. Was the ECT signal circuit shorted to ground?	—	Verify repair	Go to *Step 7*
6	Replace the ECT sensor. Is the action complete?	—	Verify repair	—
7	Replace the PCM. **IMPORTANT:** The replacement PCM must be programmed. Refer to *On-Vehicle Service* in *Powertrain Control Module and Sensors* for procedures. And also refer to latest Service Bulletin. Check to see if the Latest software is released or not. And then Down Load the LATEST PROGRAMMED SOFTWARE to the replacement PCM. Is the action complete?	—	Verify repair	—

Downloaded from www.Manualslib.com manuals search engine

Diagnostic Trouble Code (DTC) P0118 ECT Sensor Circuit High Voltage

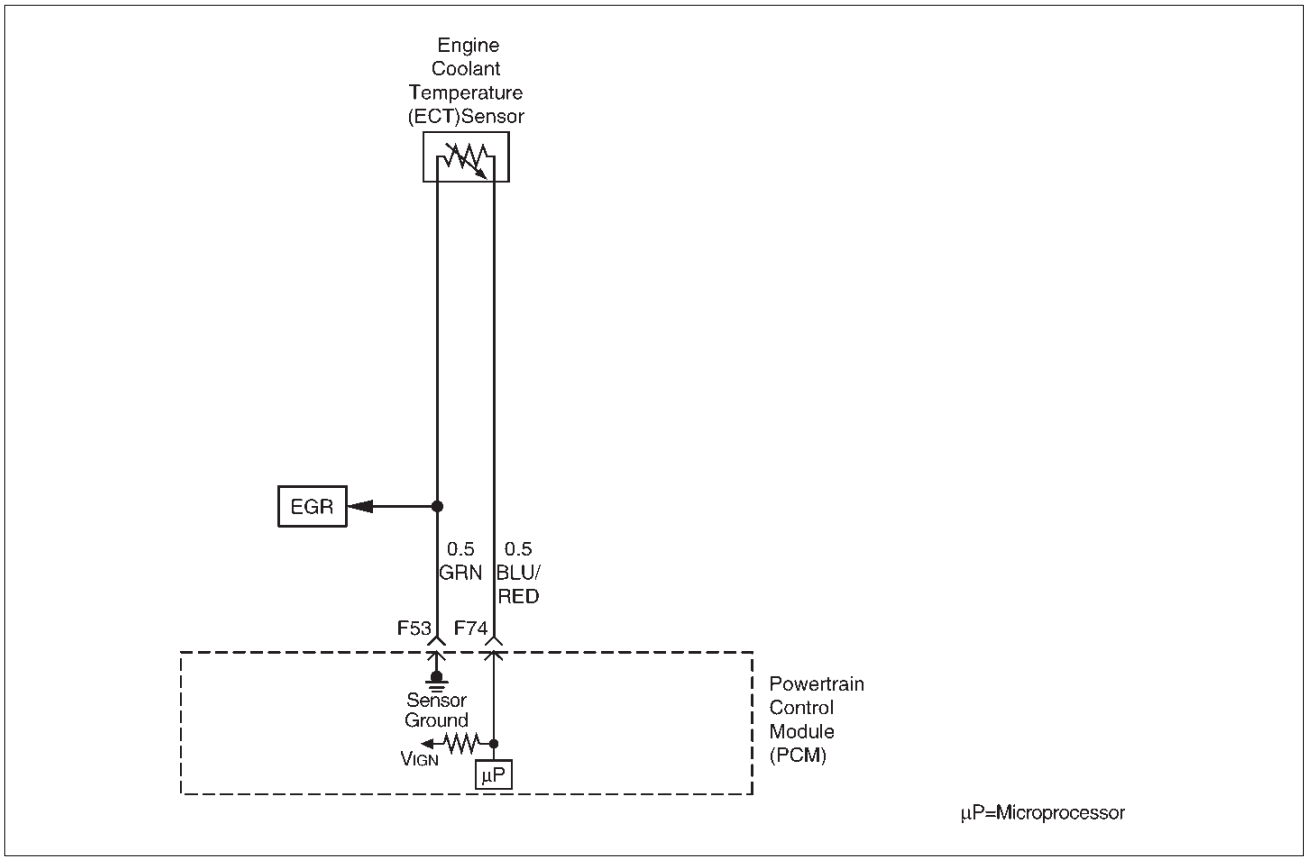

D06RY00169

Circuit Description

The engine coolant temperature (ECT) sensor is a thermistor mounted in on a coolant crossover pipe at the front of the engine. The powertrain control module (PCM) applies a voltage (about 5 volts) through a pull-up resistor to the ECT signal circuit. When the engine coolant is cold, the sensor (thermistor) resistance is high, therefore the PCM will measure a high signal voltage. As the engine coolant warms, the sensor resistance becomes less, and the ECT signal voltage measured at the PCM drops. With a fully warmed-up engine, the ECT signal voltage should measure about 1.5 to 2.0 volts.

Conditions for Setting the DTC

- Engine running time is longer than 1.5 minutes.
- The ECT sensor signal indicates an engine coolant temperature of –39˚C (–38˚F) or less (about 5 volts) for a total of 50 seconds over a 100-second period.

Action Taken When the DTC Sets

- The PCM will illuminate the malfunction indicator lamp (MIL) the first time the fault is detected.
- The PCM will substitute the ECT reading with a default engine coolant temperature value. The default value is based on start-up intake air temperature and running time.
- The PCM will store conditions which were present when the DTC was set as Freeze Frame and in the Failure Records data.

Conditions for Clearing the MIL/DTC

- The PCM will turn the MIL “OFF” on the third consecutive trip cycle during which the diagnostic has been run and the fault condition is no longer present.
- A history DTC P0118 will clear after 40 consecutive warm-up cycles have occurred without a fault.
- DTC P0118 can be cleared by using the Tech 2 “Clear Info” function or by disconnecting the PCM battery feed.

Diagnostic Aids

Check for the following conditions:

The ECT shares a ground with the Transmission Fluid Temperature sensor, the Fuel Tank Pressure sensor, and the MAP sensor.

Check the ground if these DTCs are also set.

- Poor connection at PCM – Inspect harness connectors for backed-out terminals, improper mating, broken locks, improperly formed or damaged terminals, and poor terminal-to-wire connection.
- Damaged harness – Inspect the wiring harness for damage. If the harness appears to be OK, observe the ECT display on the Tech 2 while moving connectors and wiring harnesses related to the ECT sensor. A change in the ECT display will indicate the location of the fault.

If DTC P0118 cannot be duplicated, the information included in the Failure Records data can be useful in determining vehicle mileage since the DTC was last set. If it is determined that the DTC occurs intermittently,

Downloaded from www.Manualslib.com manuals search engine

performing the DTC P1115 Diagnostic Chart may isolate the cause of the fault.

Test Description

Number(s) below refer to the step number(s) on the Diagnostic Chart.

2. Verifies that the fault is present.

3. If DTC P0118 can be repeated only by duplicating the Failure Records conditions, refer to the "Temperature vs. Resistance Value" table. The table may be used to test the ECT sensor at various temperatures to evaluate the possibility of a "shifted" sensor that may be shorted above or below a certain temperature. If this is the case, replace the ECT sensor. If the ECT sensor appears to be OK, the fault is intermittent; refer to *Diagnostic Aids*.

Engine Coolant Temperature Sensor

˚C	˚F	OHMS
Temperature vs. Resistance Values (approximate)		
100	212	177
80	176	332
60	140	667
45	113	1188
35	95	1802
25	77	2796
15	59	4450
5	41	7280
–5	23	12300
–15	5	21450
–30	–22	52700
–40	–40	100700

DTC P0118 – ECT Sensor Circuit High Voltage

Step	Action	Value(s)	Yes	No
1	Was the "On-Board Diagnostic (OBD) System Check" performed?	—	Go to *Step 2*	Go to *OBD System Check*
2	1. Ignition "ON," engine "OFF." 2. Observe the "Eng Cool Temp" display on the Tech 2. Is the "Eng Cool Temp" below the specified value?	–39˚C (–38˚F)	Go to *Step 4*	Go to *Step 3*
3	1. Ignition "ON," engine "OFF." 2. Review and record Tech 2 Failure Records data. 3. Operate the vehicle within Failure Records conditions as noted. 4. Using a Tech 2, monitor the "DTC" info for DTC P0118. Does the Tech 2 indicate DTC P0118 failed?	—	Refer to *Test Description*	Refer to *Diagnostic Aids*
4	1. Disconnect the ECT sensor electrical connector. 2. Jumper the ECT signal circuit and the sensor ground circuit together at the ECT sensor harness connector. 3. Observe the "Eng Cool Temp" display on the Tech 2. Is the "Eng Cool Temp" at the specified value?	140˚C (284˚F)	Go to *Step 6*	Go to *Step 5*
5	1. Jumper the ECT signal circuit at the ECT sensor harness connector to chassis ground. 2. Observe the "Eng Cool Temp" display on the Tech 2. Is the "Eng Cool Temp" at the specified value?	140˚C (284˚F)	Go to *Step 7*	Go to *Step 8*
6	Check for poor connections at the ECT sensor and replace terminals if necessary. Did any terminals require replacement?	—	Verify repair	Go to *Step 10*

Downloaded from www.Manualslib.com manuals search engine

DTC P0118 – ECT Sensor Circuit High Voltage (Cont'd)

Step	Action	Value(s)	Yes	No
7	1. Ignition "OFF." 2. Disconnect the PCM, and check the ECT sensor ground circuit for an open. 3. If the ECT sensor ground circuit is open, repair it as necessary. Was the ECT sensor ground circuit open?	—	Verify repair	Go to *Step 9*
8	1. Ignition "OFF." 2. Disconnect the PCM, and check the ECT signal circuit for an open. 3. If the ECT sensor signal circuit is open, repair it as necessary. Was the ECT signal circuit open?	—	Verify repair	Go to *Step 9*
9	Check for a poor sensor ground or ECT signal circuit terminal connection at the PCM and replace terminal(s) if necessary. Did any of the terminals need to be replaced?	—	Verify repair	Go to *Step 11*
10	Replace the ECT sensor. Is the action complete?	—	Verify repair	—
11	Replace the PCM. **IMPORTANT:** The replacement PCM must be programmed. Refer to *On-Vehicle Service* in *Powertrain Control Module and Sensors* for procedures. And also refer to latest Service Bulletin. Check to see if the Latest software is released or not. And then Down Load the LATEST PROGRAMMED SOFTWARE to the replacement PCM. Is the action complete?	—	Verify repair	—

Downloaded from www.Manualslib.com manuals search engine

Diagnostic Trouble Code (DTC)
P0125 ECT Excessive Time to Closed Loop Fuel Control

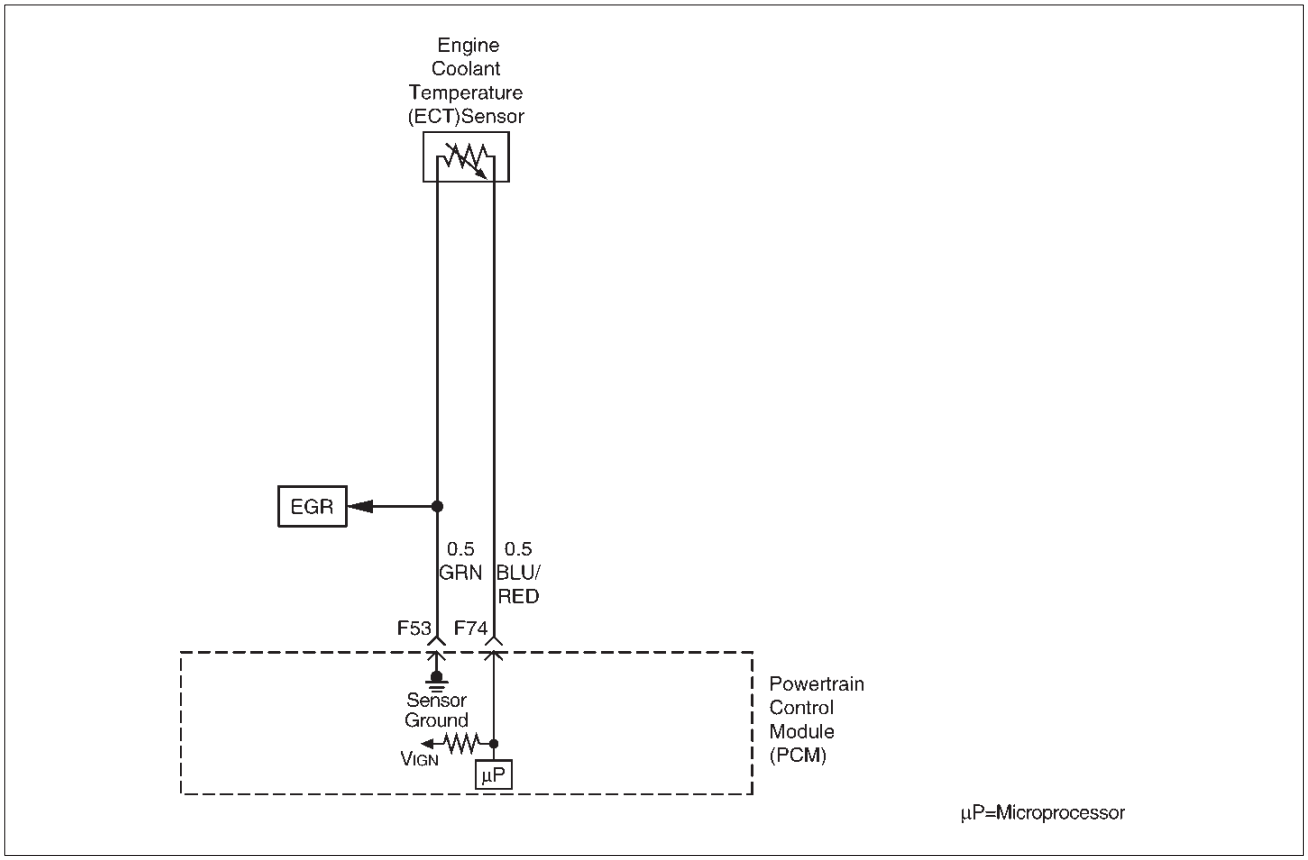

D06RY00169

Circuit Description

To provide the best possible combination of driveability, fuel economy, and emission control, a “closed loop” air/fuel metering system is used. When the vehicle is first started, the powertrain control module (PCM) controls fuel delivery in “open loop,” ignoring the heated oxygen sensor (HO2S) signals and calculating air/fuel ratio based on inputs from the engine coolant temperature, throttle position, and mass air flow sensors. The PCM will begin using the Bank 1 HO2S 1 and Bank 2 HO2S 1 signals for controlling fuel delivery under “closed loop” conditions when the following conditions have been met:

- The HO2S output signals are varying, indicating that the sensors are hot enough to operate properly.
- The engine coolant temperature sensor indicates coolant temperature above 50˚C (122˚F).
- Time since start-up is at least 16 seconds for a warm engine or 23 seconds for a cold engine.

Conditions for Setting the DTC

- No active IAT or ECT DTC(s) are present.
- Engine is running.
- Vehicle speed is greater than 5 mph (8 km/h) .
- Intake air temperature is greater than –10˚C (14˚F) 0˚C (32˚F).
- Start–up engine coolant temperature is between –10˚C (–14˚F) and 28˚C (82˚F).
- For a warm engine (intake air temperature is greater than 10˚C/50˚F), engine coolant temperature sufficient to allow “closed loop” operation (50˚C/122˚F) is not achieved within 2 minutes of start-up. For a cold engine (intake air temperature between (–7˚C and 10˚C), engine coolant temperature sufficient to allow “closed loop” operation (50˚C/122˚F) is not achieved within 10 minutes of start-up.
- The above condition fails 20 consecutive times.

Action Taken When the DTC Sets

- The PCM will illuminate the malfunction indicator lamp (MIL) after the second consecutive trip in which the fault is detected.
- The PCM will store conditions which were present when the DTC was set as Freeze Frame and in the Failure Records data.

Conditions for Clearing the MIL/DTC

- The PCM will turn the MIL “OFF” on the third consecutive trip cycle during which the diagnostic has been run and the fault condition is no longer present.
- A history DTC P0125 will clear after 40 consecutive warm-up cycles have occurred without a fault.
- DTC P0125 can be cleared by using the Tech 2 “Clear Info” function or by disconnecting the PCM battery feed.

Downloaded from www.Manualslib.com manuals search engine

Diagnostic Aids

DTC P0125 set indicates a faulty ECT sensor. Comparing the engine coolant temperature displayed on a Tech 2 with actual coolant temperature measured with a thermometer may isolate this condition. If the displayed engine coolant temperature is not close to the actual coolant temperature, replace the ECT sensor.

Check for the following conditions:

- Poor connection at PCM – Inspect harness connectors for backed-out terminals, improper mating, broken locks, improperly formed or damaged terminals, and poor terminal-to-wire connection.
- Damaged harness – Inspect the wiring harness for damage. If the harness appears to be OK, observe the display on the Tech 2 while moving connectors and wiring harnesses related to the sensor. A change in the display will indicate the location of the fault.

If DTC P0125 cannot be duplicated, the information included in the Failure Records data can be useful in determining vehicle mileage wince the DTC was last set.

Test Description

Number(s) below refer to the step number(s) on the Diagnostic Chart.

2. Comparing the engine coolant temperature displayed on a Tech 2 with actual coolant temperature measured with a thermometer may isolate this condition. If the displayed engine coolant temperature is not close to the actual coolant temperature, replace the ECT sensor. If the temperatures are close, the fault is intermittent; refer to *Diagnostic Aids*.

Engine Coolant Temperature

˚C	˚F	OHMS
Temperature vs. Resistance Values (approximate)		
100	212	177
80	176	332
60	140	667
45	113	1188
35	95	1802
25	77	2796
15	59	4450
5	41	7280
–5	23	12300
–15	5	21450
–30	–22	52700
–40	–40	100700

DTC P0125 –ECT Excessive Time to Closed Loop Fuel Control

Step	Action	Value(s)	Yes	No
1	Was the “On-Board Diagnostic (OBD) System Check” performed?	—	Go to *Step 2*	Go to *OBD System Check*
2	Are any ECT sensor DTCs set?	—	Go to applicable ECT sensor DTC chart	Go to *Step 3*
3	1. Allow the engine to cool completely. 2. Check the cooling system coolant level (refer to *Cooling and Radiator*). Is the coolant level OK?	—	Go to *Step 4*	Go to *Step 9*
4	1. Start the engine. 2. With the engine idling, monitor “ENG COOL TEMP” display on the Tech 2. Does “ENG COOL TEMP” increase to above the specified value within 2 minutes?	21˚C (70˚F)	Refer to *Diagnostic Aids*	Go to *Step 5*
5	Check for proper operation of the thermostat (refer to *Cooling and Radiator*). Is the thermostat operating correctly?	—	Go to *Step 6*	Go to *Step 9*

Downloaded from www.Manualslib.com manuals search engine

DTC P0125 –ECT Excessive Time to Closed Loop Fuel Control (Cont'd)

Step	Action	Value(s)	Yes	No
6	Compare engine coolant temperature displayed on the Tech 2 to the actual coolant temperature measured with a thermometer. (Observe normal precautions when opening the cooling system.) Is the Tech 2 engine coolant temperature indication close to the measured temperature?	—	Go to *Step 9*	Go to *Step 7*
7	1. Ignition "OFF." 2. Disconnect the PCM. 3. Using a DVM, measure the resistance of the ECT at the PCM connector. 4. Compare the DVM reading with the chart in "Test Description." Is the chart value approximately equal to the thermometer reading?	—	Go to *Step 12*	Go to *Step 8*
8	Check for high resistance in wiring related to the ECT sensor. Also, check for poor connections at the ECT sensor and the PCM. Was a problem found?	—	Go to *Step 10*	Go to *Step 11*
9	Refer to *Cooling and Radiator* for cooling system diagnosis and repair condition as necessary. Is the action complete?	—	Verify repair	—
10	Replace the faulty terminal(s) or repair faulty wiring as necessary. Is the action complete?	—	Verify repair	—
11	Replace the ECT sensor. Is the action complete?	—	Verify repair	—
12	Replace the PCM. **IMPORTANT:** The replacement PCM must be programmed. Refer to *On-Vehicle Service* in *Powertrain Control Module and Sensors* for procedures. And also refer to latest Service Bulletin. Check to see if the Latest software is released or not. And then Down Load the LATEST PROGRAMMED SOFTWARE to the replacement PCM. Is the action complete?	—	Verify repair	—

Downloaded from www.Manualslib.com manuals search engine

Diagnostic Trouble Code(DTC)
P0128 Thermostat Insufficient temperrature for Stable Opreation

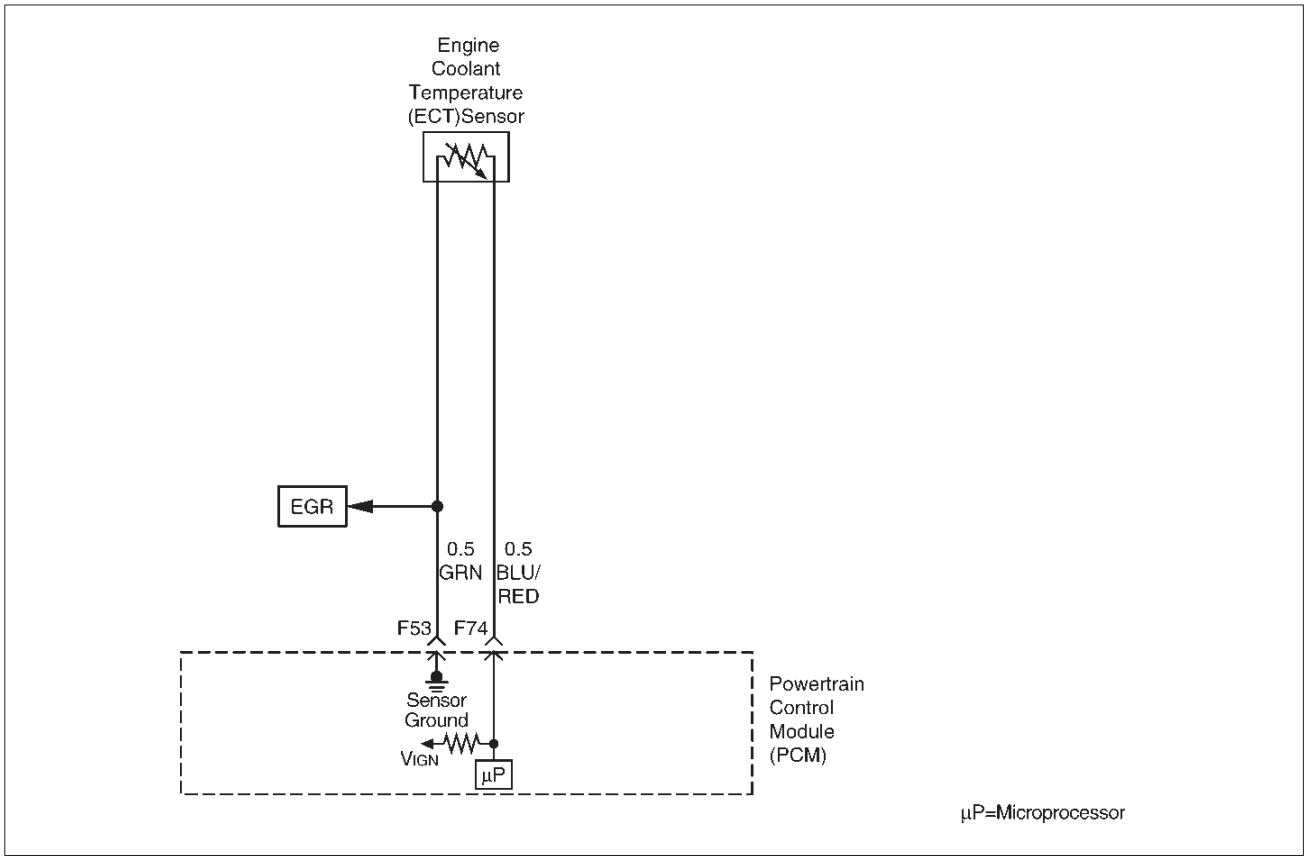

D06RY00169

Circuit Description

- The engine coolant temperature (ECT) sensor thermistor mounted on a coolant crossover pipe at the front of the engine.

  This code determines if system has insufficient coolant temperatures for stable operation.

Conditions for setting the DTC

- Engine running.
- No IAT, ECT and MAF DTCs set.
- No VSS DTC set.

Warm case(Ambient temperature is between 50˚F and 128˚F.):

Time for coolant to reach stabillzed closed loop value is less than 239 sec.

Cold case(Ambient temperature is between 20˚F and 50˚F.):

Time for coolant to reach stabillzed thermostat regulation temperature is more than 263 sec.

Action Taken When the DTC Sets

- The PCM will illuminate the malfunction indicator lamp(MIL) after the second consecutive trip in which the fault is detected.
- The PCM will store condition which were present when the DTC was set as Freeze Frame and in the Failure Records data.

Conditions for Clearing the MIL/DTC

- The PCM will turn the MIL “OFF” on the third consecutive trip cycle during which the diagnostic has been run and the fault condtion is no longer present.
- A history DTC P0128 will clear after 40 cosecutive trip cycle during which the warm up cycles have occurred without a fault.
- DTC P0128 can be cleared using the Tech 2 “Clear Info” function or by disconnecting the PCM battery feed.

  Tech 2 “Clear Info” function or by disconnecting the PCM battery feed.

Diagnostic Aids

An intermittent may be caused by the following:

- Poor connectons.
- Mis routed harness.
- Rubbed through wire insulation.
- Broken wire inside the insulation.

Check for the following conditions:

- Poor connection at PCM–Inspect harness connectors for backed out terminals,improper mating,broken locks, improperly formed or damaged terminals,and poor terminal to wire connection.

Downloaded from www.Manualslib.com manuals search engine

- Damaged harness–Inspect the wiring harness for damage.

  If the harness appears to be OK,observe the ECT display on the Tech2 while moving connectors and wiring harnesses related to the sensor.

  A change in the display will indicate the location of the fault.

  If DTC P0128 cannot be duplicated, the information included in the Faillure Records data can be useful in determined vehicle mileage since the DTC was last set.

  If it is determined that the DTC occurs intermittently, performing the DTC P0128 Diagnostic Chart may isolate the cause of the fault.

Downloaded from www.Manualslib.com manuals search engine

Diagnostic Trouble Code (DTC)
P0128 Thermostat Insufficient temperrature for stable opreation

Step	Action	Value(s)	Yes	No
1	Was the “On-Board(OBD)System Check”performed?	—	Go to *Step 2*	Go to *OBD System Check*
2	1. Visually/physically check air duct and water pipe for splits, kinks,and proper conections and routing. 2. If a problem is found,repair as necessary. Was a problem found?	—	Verify repair	Go to *Step 3*
3	1. Remove and check the filter element for dirt or restrictions. 2. Replace the air filter element if necessary. Was a problem found?	—	Verify repair	Go to *Step 4*
4	1. Remove and check the Thermostat for stable opreation. Refer to *6B section.* 2. Replace the thermostat if necessary. Was a problem found?	—	Verify repair	Go to *Step 5*
5	1. Ignition “ON”,engine “OFF”. 2. Review and record Tech 2 Failure Records. 3. Opreate the vehicle within Failure Records conditions as noted. 4. Using a Tech 2, monitor “DTC” info for DTC P0128. Does the Tech 2 indicate DTC P0128 failed this ignition?	—	Go to *Step 6*	Refer to *DiagnosticAid s*
6	1. Ignition “ON”, engine “OFF”. 2. Oberve the “Eng Cool Temp”display on the Tech 2. Is the “Eng Cool Temp” below the specified value?	139˚C (282˚F)	Verify repair	Go to *Step 7*
7	1. Ignition “OFF”. 2. Disconnect the PCM and check the ECT signal circuit for a short to ground or a short to the sensor ground circuit. 3. If the ECT signal circuit is shorted,repair it as necessary. Was a problem found?	—	Verify repair	Refer to *Diag-nostic* Go to *Step 8*
8	Replace the PCM. **IMPORTANT:** The replacement PCM must be programmed. Refer to *ON-Vehicle Service in Power Control Module and Sensors for procedures.* And also refer to latest Service Bulletin. Check to see if the latest software is released or not. And then Down Load the LATEST PROGRMMED SOFTWARE to the replacement PCM. Is the action complete?	—	Verify repair	—

Downloaded from www.Manualslib.com manuals search engine

Diagnostic Trouble Code (DTC)
P0131 HO2S Circuit Low Voltage Bank 1 Sensor 1

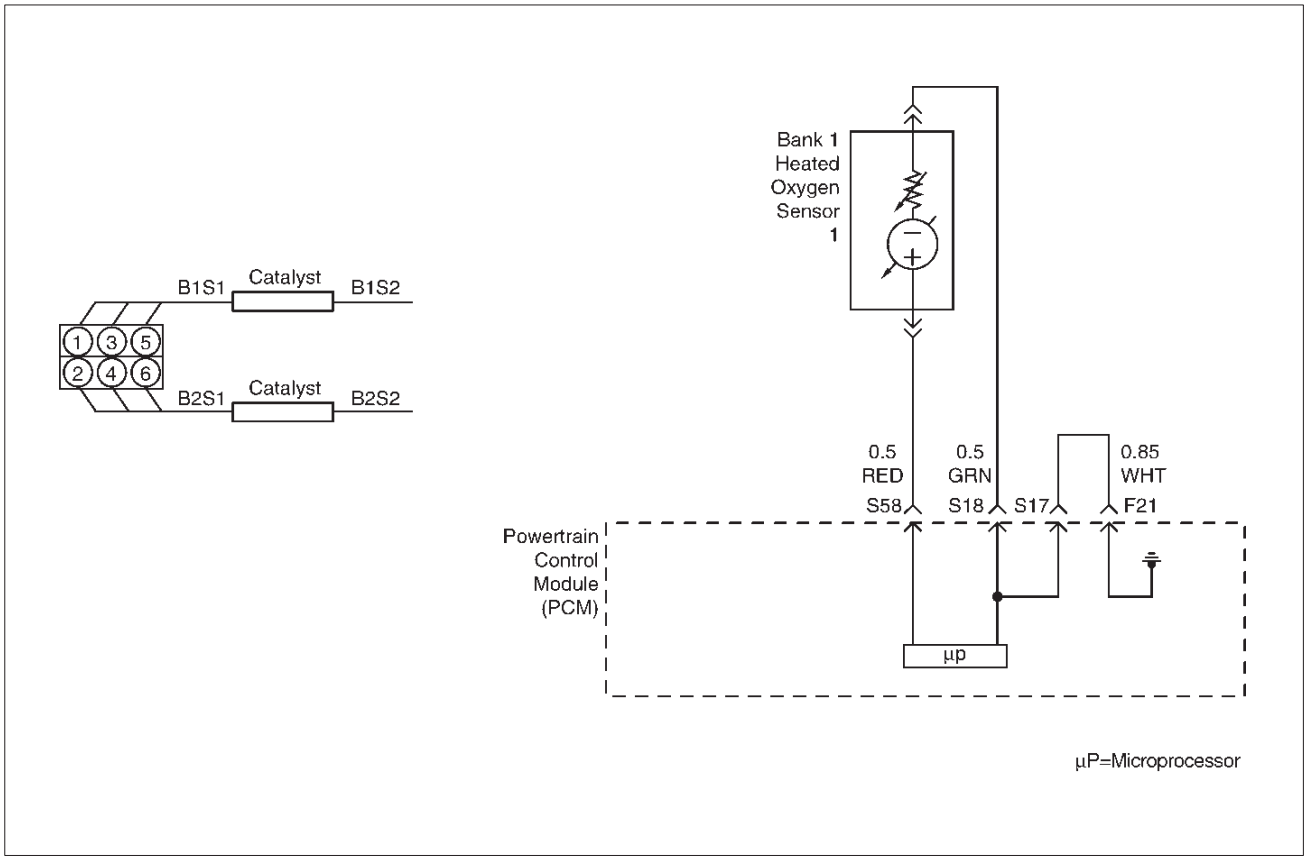

D06RY00170

Circuit Description

The powertrain control module (PCM) supplies a bias voltage of about 450 mV between the heated oxygen sensor (HO2S) signal high and signal low circuits. When measured with a 10 megaohm digital voltmeter, this may display as low as 350 mV. The oxygen sensor varies the voltage within a range of about 1000 mV when the exhaust is rich, down through about 10 mV when exhaust is lean. The PCM constantly monitors the HO2S signal during "closed loop" operation and compensates for a rich or lean condition by decreasing or increasing injector pulse width as necessary. If the Bank 1 HO2S 1 voltage remains excessively low for an extended period of time, DTC P0131 will be set.

Conditions for Setting the DTC

- No related DTCs.
- Vehicle is operating in "closed loop."
- Engine coolant temperature is above 60˚C (140˚F).
- "Closed loop" commanded air/fuel ratio is between 14.5 and 14.8.
- Throttle angle is between 3% and 19%.
- Bank 1 HO2S 1 signal voltage remains below 22 mV during normal "closed loop" operation for a total of 77 seconds over a 90-second period of time.

Action Taken When the DTC Sets

- The PCM will illuminate the malfunction indicator lamp (MIL) the first time the fault is detected.
- The PCM will store conditions which were present when the DTC was set as Freeze Frame and in the Failure Records data.
- "Open loop" fuel control will be in effect.

Conditions for Clearing the MIL/DTC

- The PCM will turn the MIL "OFF" on the third consecutive trip cycle during which the diagnostic has been run and the fault condition is no longer present.
- A history DTC P0131 will clear after 40 consecutive warm-up cycles have occurred without a fault.
- DTC P0131 can be cleared by using the Tech 2 "Clear Info" function or by disconnecting the PCM battery feed.

Diagnostic Aids

Check for the following conditions:

- Heated oxygen sensor wiring – The sensor pigtail may be routed incorrectly and contacting the exhaust system.
- Poor PCM to engine block grounds.
- Fuel pressure – The system will go lean if pressure is too low. The PCM can compensate for some decrease. However, If fuel pressure is too low, a DTC P0131 may be set. Refer to *Fuel System Diagnosis*.
- Lean injector(s) – Perform "Injector Balance Test."

Downloaded from www.Manualslib.com manuals search engine

- Vacuum leaks – Check for disconnected or damaged vacuum hoses and for vacuum leaks at the intake manifold, throttle body, EGR system, and PCV system.
- Exhaust leaks – An exhaust leak may cause outside air to be pulled into the exhaust gas stream past the HO2S, causing the system to appear lean. Check for exhaust leaks that may cause a false lean condition to be indicated.
- MAF sensor – The system can go lean if the MAF sensor signal indicates an engine airfiow measurement that is not correct. Disconnect the MAF sensor to see if the lean condition is corrected. If so, replace the MAF sensor.
- Fuel contamination – Water, even in small amounts, can be delivered to the fuel injectors. The water can cause a lean exhaust to be indicated. Excessive alcohol in the fuel can also cause this condition. Refer to *Fuel System Diagnosis* for the procedure to check for fuel contamination.
- If none of the above conditions are present, replace the affected HO2S.

Test Description

Number(s) below refer to step numbers on the diagnostic chart.

3. DTC P0131 failing during operation may indicate a condition described in the “Diagnostic Aids” above. If the DTC P0131 test passes while the Failure Records conditions are being duplicated, an intermittent condition is indicated.

Reviewing the Failure Records vehicle mileage since the diagnostic test last failed may help determine how often the condition that caused the DTC to be set occurs. This may assist in diagnosing the condition.

DTC P0131 –HO2S Circuit Low Voltage Bank 1 Sensor 1

Step	Action	Value(s)	Yes	No
1	Was the “On-Board Diagnostic (OBD) System Check” performed?	—	Go to *Step 2*	Go to *OBD System Check*
2	1. Install the Tech 2. 2. Run the engine at operating temperature. 3. Operate the vehicle within the parameters specified under “Conditions for Setting the DTC” criteria included in Diagnostic Support. 4. Using a Tech 2, monitor Bank 1 HO2S 1 voltage. Does the Bank 1 HO2S 1 voltage remain below the specified value?	22 mV	Go to *Step 4*	Go to *Step 3*
3	1. Ignition “ON,” engine “OFF,” review and record Tech 2 Failure Records data and note parameters. 2. Operate the vehicle within Failure Records conditions as noted. 3. Using a Tech 2, monitor “DTC” info for DTC P0131 until the DTC P0131 test runs. Note test result. Does Tech 2 indicate DTC P0131 failed this ignition?	—	Go to *Step 4*	Refer to *Diagnostic Aids*
4	1. Turn the ignition “OFF.” 2. Disconnect the PCM. 3. Check the Bank 1 HO2S 1 high and low circuits for a short to ground or a short to the heater ground circuit. Are the Bank 1 HO2S 1 signal circuits shorted to ground?	—	Go to *Step 5*	Go to *Step 6*
5	Repair the Bank 1 HO2S 1 signal circuit. Is the action complete?	—	Verify repair	—
6	1. Turn the ignition “OFF,” HO2S 1 and PCM disconnected. 2. Check for continuity between the high and low signal circuits. Was there continuity between the high and low circuits?	—	Go to *Step 7*	Go to *Step 8*

Downloaded from www.Manualslib.com manuals search engine

DTC P0131 –HO2S Circuit Low Voltage Bank 1 Sensor 1 (Cont'd)

Step	Action	Value(s)	Yes	No
7	Repair the short between the high and low circuits. Is the action complete?	—	Verify repair	—
8	1. Ignition "OFF." 2. Reconnect the PCM, leave the sensor disconnected. 3. Ignition "ON." Does the Tech 2 indicate Bank 1 HO2S 1 voltage between the specified values?	425-475 mV	Refer to *Diagnostic Aids*	Go to *Step 9*
9	Replace the PCM. **IMPORTANT:** The replacement PCM must be programmed. Refer to *On-Vehicle Service* in *Powertrain Control Module and Sensors* for procedures. And also refer to latest Service Bulletin. Check to see if the Latest software is released or not. And then Down Load the LATEST PROGRAMMED SOFTWARE to the replacement PCM. Is the action complete?	—	Verify repair	—

Downloaded from www.Manualslib.com manuals search engine

Diagnostic Trouble Code (DTC) P0132 HO2S Circuit High Voltage Bank 1 Sensor 1

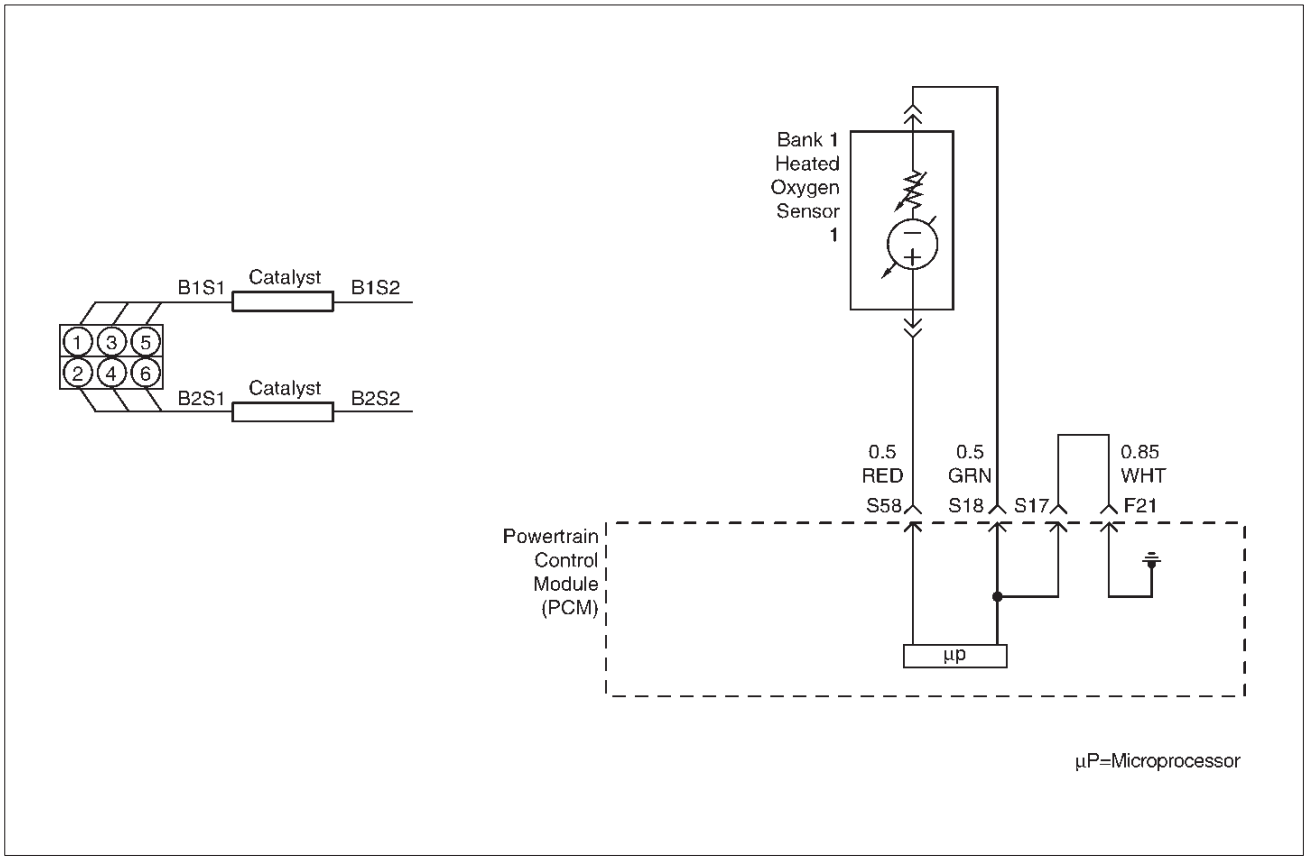

D06RY00170

Circuit Description

The powertrain control module (PCM) supplies a bias voltage of about 450 mV between the heated oxygen sensor (HO2S) signal and low circuits. When measured with a 10 megaohm digital voltmeter, this may display as low as 320 mV. The oxygen sensor varies the voltage within a range of about 1000 mV when exhaust is rich, down through about 10 mV when exhaust is lean. The PCM constantly monitors the HO2S signal during "closed loop" operation and compensates for a rich or lean condition by decreasing or increasing injector pulse width as necessary. If the Bank 1 HO2S 1 voltage remains excessively high for an extended period of time, DTC P0132 will be set.

Conditions for Setting the DTC

- No related DTCs.
- Engine coolant temperature is above 60˚C (140˚F)
- "Closed loop" commanded air/fuel ratio is between 14.5 and 14.8.
- Throttle angle is between 3% and 19%.
- Bank 1 HO2S 1 signal voltage remains above 952 mV during normal "closed loop" operation for a total of 77 seconds over a 90-second period.

OR

- Bank 1 HO2S 1 signal voltage remains above 500 mV during "deceleration fuel cutoff mode" operation for 3 seconds.

Action Taken When the DTC Sets

- The PCM will illuminate the malfunction indicator lamp (MIL) the first time the fault is detected.
- The PCM will store conditions which were present when the DTC was set as Freeze Frame and in the Failure Records data.
- "Open loop" fuel control will be in effect.

Conditions for Clearing the MIL/DTC

- The PCM will turn the MIL "OFF" on the third consecutive trip cycle during which the diagnostic has been run and the fault condition is no longer present.
- A history DTC P0132 will clear after 40 consecutive warm-up cycles have occurred without a fault.
- DTC P0132 can be cleared by using the Tech 2 "Clear Info" function or by disconnecting the PCM battery feed.

Diagnostic Aids

Check the following items:

- Fuel pressure – The system will go rich if pressure is too high. The PCM can compensate for some increase. However, if fuel pressure is too high, a DTC P0132 may be set. Refer to *Fuel System Diagnosis*.
- Perform "Injector Balance Test" – Refer to *Fuel System Diagnosis*.
- Check the EVAP canister for fuel saturation – If full of fuel, check canister control and hoses. Refer to *Evaporative (EVAP) Emission Control System*.

Downloaded from www.Manualslib.com manuals search engine

- MAF sensor –The system can go rich if MAF sensor signal indicates an engine airflow measurement that is not correct. Disconnect the MAF sensor to see it the rich condition is corrected. If so, replace the MAF sensor.
- Check for a leak in the fuel pressure regulator diaphragm by checking the vacuum line to the regulator for the presence of fuel. There should be no fuel in the vacuum line.
- An intermittent TP sensor output will cause the system to go rich due to a false indication of the engine accelerating.
- Shorted Heated Oxygen Sensor (HO2S) –If the HO2S is internally shorted, the HO2S voltage displayed on the Tech 2 will be over 1 volt. Try disconnecting the affected HO2S with the key "ON," engine "OFF." If the displayed HO2S voltage changes from over 1000 mV to around 450 mV, replace the HO2S. Silicon contamination of the HO2S can also cause a high HO2S voltage to be indicated. This condition is indicated by a powdery deposit on the portion of the HO2S exposed to the exhaust stream. If contamination is noticed, replace the affected HO2S.
- Open HO2S Signal Circuit or Faulty HO2S–A poor connection or open in the HO2S signal circuit can cause the DTC to set during deceleration fuel mode. An HO2S which is faulty and not allowing a full voltage swing between the rich and lean thresholds can also cause this condition. Operate the vehicle by monitoring the HO2S voltage with a Tech 2. If the HO2S voltage is limited within a range between 300 mV to 600 mV, check the HO2S signal circuit wiring and associated terminal conditions.
- If none of the above conditions are present, replace the affected HO2S.

Test Description

Number(s) below refer to the step number(s) on the Diagnostic Chart.

3. DTC P0132 failing during "deceleration fuel cutoff mode" operation may indicate a condition described in the "Diagnostic Aids" above. If the DTC P0132 test passes while the Failure Records conditions are being duplicated, an intermittent condition is indicated.

Reviewing the Failure Records vehicle mileage since the diagnostic test last failed may help determine how often the condition that caused the DTC to be set occurs. This may assist in diagnosing the condition.

DTC P0132 – HO2S Circuit High Voltage Bank 1 Sensor 1

Step	Action	Value(s)	Yes	No
1	Was the "On-Board Diagnostic (OBD) System Check" performed?	—	Go to *Step 2*	Go to *OBD System Check*
2	1. Install the Tech 2. 2. Run the engine at operating temperature. 3. Operate the vehicle within parameters specified under "Conditions for Setting the DTC" included in Diagnostic Support. 4. Using a Tech 2, monitor Bank 1 HO2S 1 voltage. Does the Bank 1 HO2S 1 voltage remain above the specified value?	952 mV (500 mV in deceleration fuel cutoff mode)	Go to *Step 4*	Go to *Step 3*
3	1. Ignition "ON," review and record Tech 2 Failure Records data. 2. Operate the vehicle within Failure Records conditions as noted. 3. Using a Tech 2, monitor "DTC" info for DTC P0132 until the DTC P0132 test runs. 4. Note the test result. Does the Tech 2 indicate DTC P0132 failed this ignition?	—	Go to *Step 4*	Refer to *Diagnostic Aids*
4	1. Ignition "OFF." 2. Disconnect Bank 1 HO2S 1. 3. Ignition "ON." 4. At HO2S Bank 1 Sensor 1 connector (PCM side) use a DVM to measure voltages at the high and low signal terminals. Are the voltages in the specified range?	3-4 V	Go to *Step 5*	Go to *Step 6*
5	Repair short to voltage in signal circuit. Is the action complete?	—	Verify repair	—

Downloaded from www.Manualslib.com manuals search engine

DTC P0132 – HO2S Circuit High Voltage Bank 1 Sensor 1 (Cont'd)

Step	Action	Value(s)	Yes	No
6	1. Ignition "ON," engine"OFF." 2. At Bank 1 HO2S 1 connector (PCM side) jumper both the HO2S high and low signal circuits (PCM side) to ground. 3. Using a Tech 2, monitor Bank 1 HO2S 1 voltage. Is Bank 1 HO2S 1 voltage below the specified value?	10 mV	Go to *Step 7*	Go to *Step 8*
7	1. Disconnect the jumpers to ground from Bank 1 HO2S 1 PCM-side connector. 2. With the HO2S 1 connector disconnected, monitor Bank 1 HO2S 1 voltage. Is Bank 1 HO2S 1 voltage between the specified values?	425-475 mV	Refer to *Diagnostic Aids*	Go to *Step 8*
8	Replace the PCM. **IMPORTANT:** The replacement PCM must be programmed. Refer to *On-Vehicle Service* in *Powertrain Control Module and Sensors* for procedures. And also refer to latest Service Bulletin. Check to see if the Latest software is released or not. And then Down Load the LATEST PROGRAMMED SOFTWARE to the replacement PCM. Is the action complete?	—	Verify repair	—

Downloaded from www.Manualslib.com manuals search engine

Diagnostic Trouble Code (DTC) P0133 HO2S Slow Response Bank 1 Sensor 1

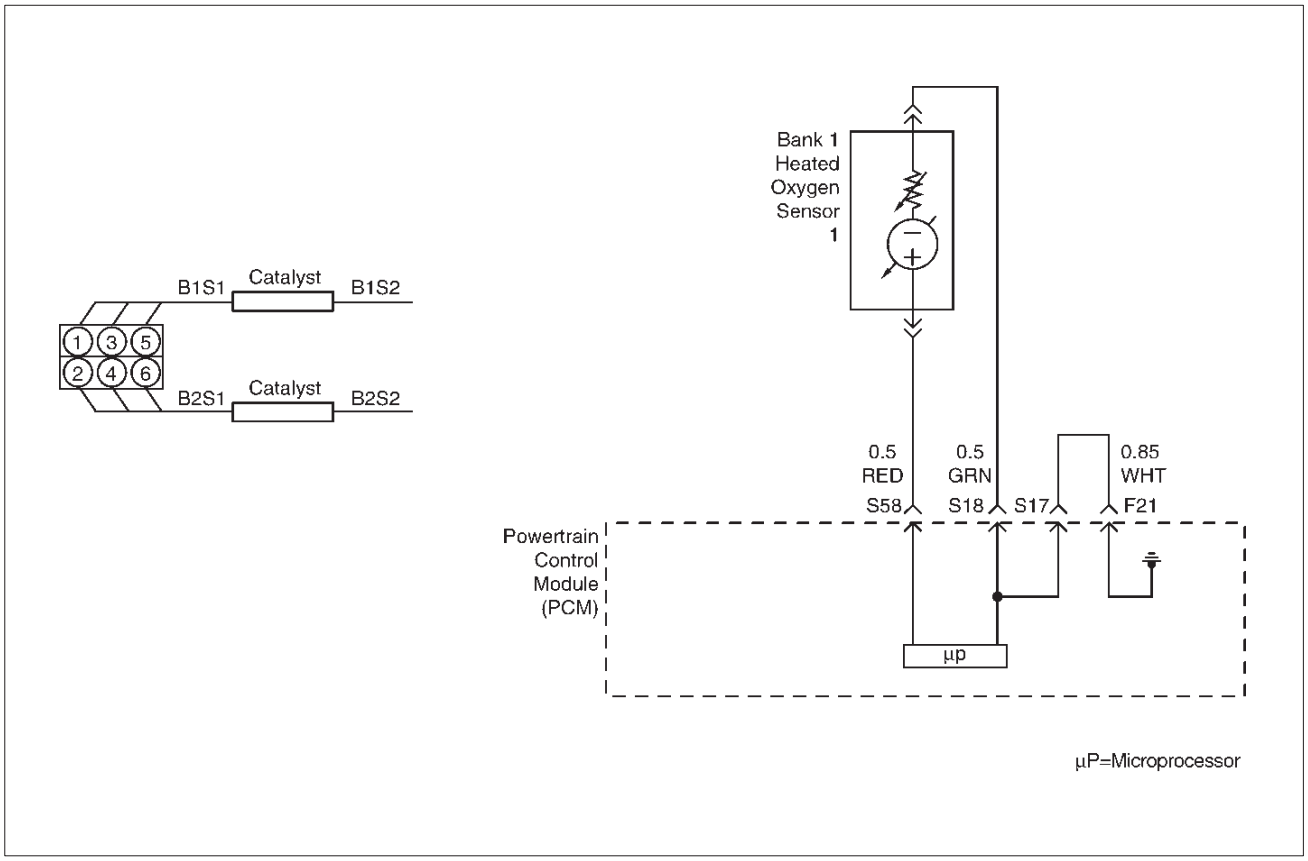

D06RY00170

Circuit Description

The powertrain control module (PCM) continuously monitors the heated oxygen sensor (HO2S) activity for 90 seconds after "closed loop" has been enabled. During the monitoring period the PCM counts the number of times that a rich-to-lean and lean-to-rich response is indicated and adds the amount of time it took to complete all rich-to-lean transitions and lean-to-rich transitions. With this information, an average time for rich-to-lean and lean-to-rich transitions can be determined. If the average response time of either transition is too slow, a DTC P0133 will be set.

A lean-to-rich transition is indicated when the HO2S voltage changes from less than 300 mV to greater than 600 mV. A rich-to-lean transition is indicated when the HO2S voltage changes from more than 600 mV to less than 300 mV. An HO2S that responds too slowly is likely to be faulty and should be replaced.

Conditions for Setting the DTC

- No related DTCs.
- Engine coolant temperature (ETC) is above 50˚C (122˚F) for automatic transmission; 75˚C (167˚F) for manual transmission.
- Engine is operating in "closed loop."
- Engine has been running for at least 1 minute.
- Engine speed is between 1500 RPM and 3000 RPM.
- Canister purge duty cycle is greater than 2%.
- Mass air flow is between 9 g/second and 42 g/second.
- All above conditions are met for 3 seconds.
- 90 seconds after "closed loop" has been enabled, Bank1 HO2S 1 average transition time between 300 mV and 600 mV is too slow. The lean-to-rich average transition response time was longer than 94 milliseconds or rich-to-lean average transition response time was longer than 105 milliseconds.

Action Taken When the DTC Sets

- The PCM will illuminate the malfunction indicator Lamp (MIL) after the second consecutive trip in which the fault is detected.
- The PCM will store conditions which were present when the DTC was set as Freeze Frame and in the Failure Records data.
- "Open loop" fuel control will be in effect.

Conditions for Clearing the MIL/DTC

- The PCM will turn the MIL "OFF" on the third consecutive trip cycle during which the diagnostic has been run and the fault condition is no longer present.
- A history DTC P0133 will clear after 40 consecutive warm-up cycles have occurred without a fault.
- DTC P0133 can be cleared by using the Tech 2 "Clear Info" function or by disconnecting the PCM battery feed.

Diagnostic Aids

Check for the following conditions:

- Poor connection at PCM – Inspect harness connectors for backed-out terminals, improper mating, broken

Downloaded from www.Manualslib.com manuals search engine

locks, improperly formed or damaged terminals, and poor terminal-to-wire connection.

- Damaged harness – Inspect the wiring harness for damage. If the harness appears to be OK, observe the Bank 1 HO2S 1 display on the Tech 2 while moving connectors and wiring harnesses related to the sensor. A change in the display will indicate the location of the fault.

If DTC P0133 cannot be duplicated, reviewing the Failure Records vehicle mileage since the diagnostic test last failed may help determine how often the condition that caused the DTC to be set occurs. This may assist in diagnosing the condition.

Test Description

Number(s) below refer to the step number(s) on the Diagnostic Chart.

2. Verifies that the fault is currently present.

3. HO2S transition time, ratio mean volts and switching DTCs set for multiple sensors indicate probable contamination. Before replacing the sensors, isolate and correct the source of the contamination to avoid damaging the replacement sensors.

Downloaded from www.Manualslib.com manuals search engine

DTC P0133 – HO2S Slow Response Bank 1 Sensor 1

Step	Action	Value(s)	Yes	No
1	Was the “On-Board Diagnostic (OBD) System Check” performed?	—	Go to *Step 2*	Go to *OBD System Check*
2	NOTE: If any DTCs are set (expect P0153, P1133, P1134, P1153, and/or P1154), refer to those DTCs before proceeding with this diagnostic chart. 1. Install the Tech 2. 2. Idle the engine at operating temperature. 3. Operate the vehicle within parameters specified under “Conditions for Setting the DTC” included in Diagnostic Support. 4. Using a Tech 2, monitor “DTC” info for DTC P0133 until the DTC P0133 test runs. 5. Note the test result. Does the Tech 2 indicate DTC P0133 failed this ignition?	—	Go to *Step 3*	Refer to *Diagnostic Aids*
3	Did the Tech 2 also indicate DTC P0153, P1133, P1134, P1153, and/or P1154 failed this ignition?	—	Go to *Step 17*	Go to *Step 4*
4	Check for leaks at the pipe joints. Are the joints leaking?	—	Go to *Step 5*	Go to *Step 6*
5	Tighten the U–bolt nuts at the leaking joints. Is the action complete?	—	Go to *Step 2*	—
6	Check for gaskets that are damaged or improperly installed. Are there damaged or misaligned gaskets?	—	Go to *Step 7*	Go to *Step 8*
7	1. Replace damaged gaskets. 2. Align the connections. 3. Tighten the connections. Is the action complete?	—	Go to *Step 2*	—
8	Check for loose exhaust flange connections. Are the flange connections loose?	—	Go to *Step 2*	Go to *Step 10*
9	Tighten the stud nuts or bolts to specifications. Is the action complete?	—	Go to *Step 2*	—
10	Check for burned or corroded exhaust pipes. Are the exhaust pipes burned or corroded?	—	Go to *Step 11*	Go to *Step 12*
11	Replace the exhaust pipes, as required. Is the action complete?	—	Go to *Step 2*	—
12	Check for leaks at the exhaust manifold. Are there leaks at the exhaust manifold?	—	Go to *Step 13*	Go to *Step 14*
13	Tighten the bolts to specifications to replace the manifold if necessary. Is the action complete?	—	Go to *Step 2*	—

Downloaded from www.Manualslib.com manuals search engine

DTC P0133 – HO2S Slow Response Bank 1 Sensor 1 (Cont'd)

Step	Action	Value(s)	Yes	No
14	Visually/physically inspect the following items: ● Ensure that the Bank 1 HO2S 1 is securely installed. ● Check for corrosion on terminals. ● Check terminal tension (at Bank 1 HO2S 1 and at the PCM). ● Check for damaged wiring. Was a problem found in any of the above areas?	—	Go to *Step 18*	Go to *Step 15*
15	1. Disconnect Bank 1 HO2S 1. 2. Ignition "ON." 3. Using a DVM at the PCM side of the HO2S 1 connector, measure the voltage between the high signal circuit and ground. Also measure the voltage between the low signal circuit and ground. Are both voltages in the specified range?	3-4 V	Go to *Step 16*	Go to *Step 19*
16	1. With Bank 1 HO2S 1 disconnected, jumper the high and low (PCM side) signal circuits to ground. 2. Ignition "ON." 3. Using a Tech 2, monitor the Bank 1 HO2S 1 voltage. Does the Tech 2 indicate less than 10 mV and immediately return to about 450 mV when the jumper is removed?	—	Go to *Step 21*	Go to *Step 22*
17	Replace the affected heated oxygen sensors. NOTE: Before replacing sensors, the cause of the contamination must be determined and corrected. ● Fuel contamination. ● Use of improper RTV sealant. ● Engine oil/coolant consumption. Is the action complete?	—	Verify repair	—
18	Repair condition as necessary. Is the action complete?	—	Verify repair	—
19	Check for faulty PCM connections or terminal damage. Is the action complete?	—	Verify repair	Go to *Step 20*
20	Repair open, short or grounded signal circuit. Is the action complete?	—	Verify repair	—
21	Replace Bank 1 HO2S 1. Is the action complete?	—	Verify repair	—
22	Replace the PCM. **IMPORTANT:** The replacement PCM must be programmed. Refer to *On-Vehicle Service* in *Powertrain Control Module and Sensors* for procedures. And also refer to latest Service Bulletin. Check to see if the Latest software is released or not. And then Down Load the LATEST PROGRAMMED SOFTWARE to the replacement PCM. Is the action complete?	—	Verify repair	—

Downloaded from www.Manualslib.com manuals search engine

Diagnostic Trouble Code (DTC)
P0134 HO2S Circuit Insufficient Activity Bank 1 Sensor 1

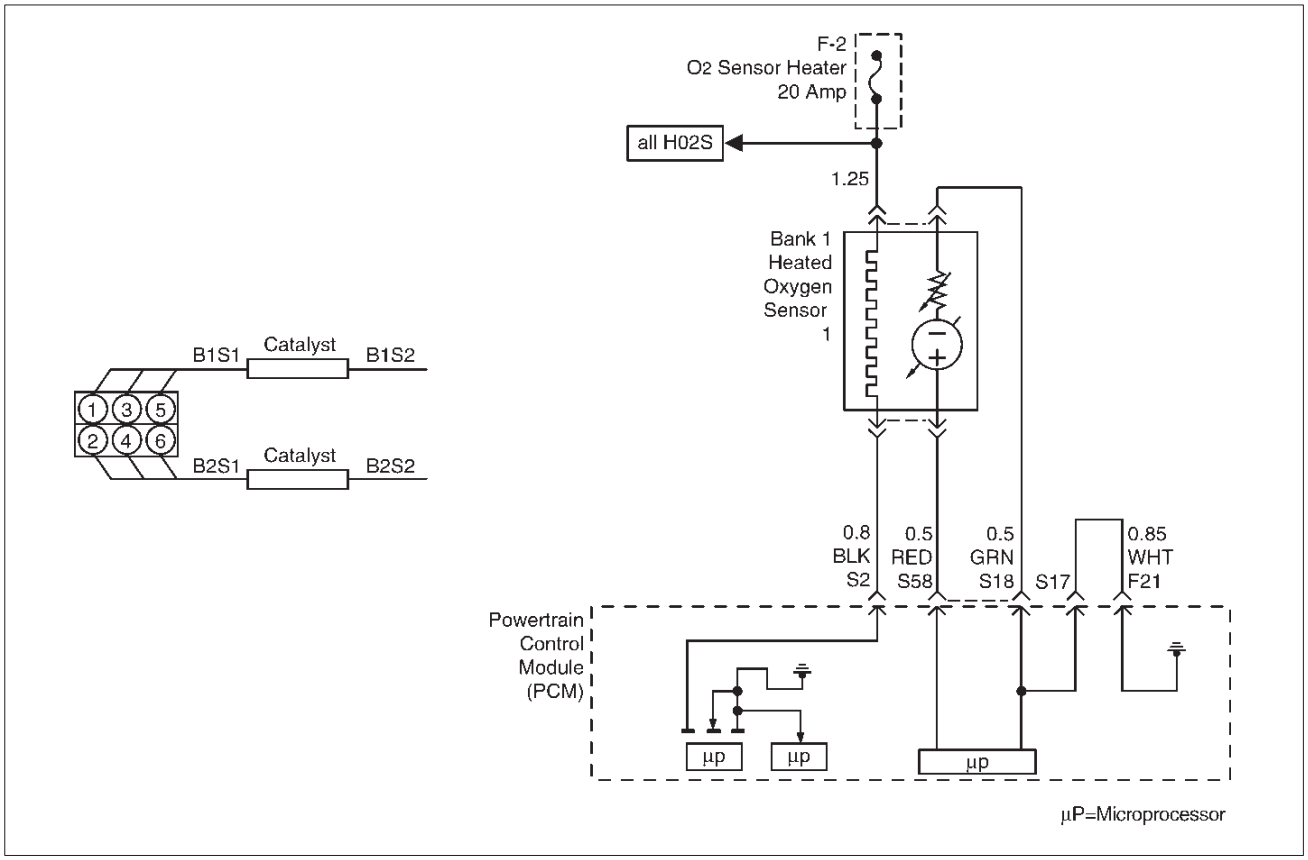

D06RY00171

Circuit Description

- The powertrain control module (PCM) supplies a bias voltage of about 450 mV between the heated oxygen sensor (HO2S) high and low circuits. When measured with a 10 megaohm digital voltmeter, this may display as low as 320 mV. The oxygen sensor varies the voltage within a range of about 1000 mV when the exhaust is rich, down through about 10 mV when exhaust is lean. The PCM constantly monitors the HO2S signal during “closed loop” operation and compensates for a rich or lean condition by decreasing or increasing injector pulse width as necessary. If the Bank 1 HO2S 1 voltage remains at or near the 450 mV bias for an extended period of time, DTC P0134 will be set, indicating an open sensor signal or sensor low circuit.
- Heated oxygen sensors are used to minimize the amount of time required for “closed loop” fuel control operation and to allow accurate catalyst monitoring. The oxygen sensor heater greatly decreases the amount of time required for fuel control sensors Bank 1 HO2S 1 and Bank 2 HO2S 1 to become active.
- Oxygen sensor heaters are required by post-catalyst monitor sensors to maintain a sufficiently high temperature for accurate exhaust oxygen content readings further from the engine.

Conditions for Setting the DTC

- No related DTCs.
- Battery voltage is above 10 volts.
- Engine run time is longer than 40 seconds.
- Oxygen sensor heater has been determined to be functioning properly.
- Bank 1 HO2S 1 signal voltage remains between 400 mV and 500 mV for a total of 77 seconds over a 90-second period of time.

Action Take When the DTC Sets

- The PCM will illuminate the malfunction indicator lamp (MIL) the first time the fault is detected.
- The PCM will store conditions which were present when the DTC was set as Freeze Frame and in the Failure Records data.
- “Open loop” fuel control will be in effect.

Conditions for Clearing the MIL/DTC

- The PCM will turn the MIL “OFF” on the third consecutive trip cycle during which the diagnostic has been run and the fault condition is no longer present.
- A history DTC P0134 will clear after 40 consecutive warm-up cycles have occurred without a fault.
- DTC P0134 can be cleared by using the Tech 2 “Clear Info” function or by disconnecting the PCM battery feed.

Diagnostic Aids

Check for the following conditions:

- Poor connection or damaged harness – Inspect the harness connectors for backed-out terminals, improper mating, broken locks, improperly formed or

Downloaded from www.Manualslib.com manuals search engine

damaged terminals, poor terminal-to-wire connection, and damaged harness.

- Faulty HO2S heater or heater circuit – With the ignition "ON," engine "OFF," after a cool down period, the HO2S 1 voltage displayed on the Tech 2 is normally 455-460 mV. A reading over 1000 mV indicates a signal line shorted to voltage. A reading under 5 mV indicates a signal line shorted to ground or signal lines shorted together. Disconnect the HO2S and connect a test light between the HO2S ignition feed and heater ground circuits. If the test light does not light for 2 seconds when the ignition is turned on, repair the open ignition feed or sensor ground circuit as necessary. If the test light lights and the HO2S signal and low circuits are OK, replace the HO2S.
- Intermittent test – With the Ignition "ON," monitor the HO2S signal voltage while moving the wiring harness and related connectors. If the fault is induced, the HO2S signal voltage will change. This may help isolate the location of the malfunction.

Test Description

Number(s) below refer to the step number(s) on the Diagnostic Chart.

3. If the DTC P0134 test passes while the Failure Records conditions are being duplicated, an intermittent conditions is indicated.

Reviewing the Failure Records vehicle mileage since the diagnostic test last failed may help determine how often the condition that caused the DTC to be set occurs. This may assist in diagnosing the condition.

DTC P0134 –HO2S Circuit Insufficient Activity Bank 1 Sensor 1

Step	Action	Value(s)	Yes	No
1	Was the "On-Board Diagnostic (OBD) System Check" performed?	—	Go to *Step 2*	Go to *OBD System Check*
2	1. Install the Tech 2. 2. Run the engine at operating temperature. 3. Operate the engine above 1200 RPM for two minutes. Does the Tech 2 indicate Bank 1 HO2S 1 voltage varying outside the specified values?	400-500 mV	Go to *Step 3*	Go to *Step 4*
3	1. Ignition "ON," engine "OFF," review and record Tech 2 Failure Records data and note parameters. 2. Operate the vehicle within Failure Records conditions as noted. 3. Using a Tech 2, monitor "DTC" info for DTC P0134 until the DTC P0134 test runs. 4. Note the test result. Does the Tech 2 indicate DTC P0134 failed this ignition?	—	Go to *Step 4*	Refer to *Diagnostic Aids*
4	Check for a damaged harness. Was a problem found?	—	Verify repair	Go to *Step 5*
5	Check for poor Bank 1 HO2S 1 high and low circuit terminal connections at the Bank 1 HO2S 1 harness connector and replace terminal(s) if necessary. Did any terminals require replacement?	—	Verify repair	Go to *Step 6*
6	Check for poor Bank 1 HO2S 1 high and low circuit terminal connections at the PCM and replace terminals if necessary. Did any terminals require replacement?	—	Verify repair	Go to *Step 7*
7	1. Ignition "OFF." 2. With the PCM disconnected, check continuity of the Bank 1 HO2S 1 high circuit. 3. If the Bank 1 HO2S 1 high circuit measures over 5.0 ohms, repair open or poor connection as necessary. Was a Bank 1 HO2S 1 high circuit problem found and corrected?	—	Verify repair	Go to *Step 8*

Downloaded from www.Manualslib.com manuals search engine

DTC P0134 –HO2S Circuit Insufficient Activity Bank 1 Sensor 1 (Cont'd)

Step	Action	Value(s)	Yes	No
8	1. Ignition "OFF." 2. With the PCM disconnected, check continuity of the Bank 1 HO2S 1 low circuit. 3. If the Bank 1 HO2S 1 low circuit measures over 5 ohms, repair open or poor connection as necessary. Was a Bank 1 HO2S 1 low circuit problem found and corrected?	—	Verify repair	Go to *Step 9*
9	1. Ignition "ON," engine "OFF." 2. Disconnect Bank 1 HO2S 1 and jumper the HO2S high and low circuits (PCM side) to ground. 3. Using a Tech 2, monitor Bank 1 HO2S 1 voltage. Is Bank 1 HO2S 1 voltage in the specified range?	0-10 mV	Go to *Step 10*	Go to *Step 11*
10	Replace Bank 1 HO2S 1. Is the action complete?	—	Verify repair	—
11	Replace the PCM. **IMPORTANT:** The replacement PCM must be programmed. Refer to *On-Vehicle Service* in *Powertrain Control Module and Sensors* for procedures. And also refer to latest Service Bulletin. Check to see if the Latest software is released or not. And then Down Load the LATEST PROGRAMMED SOFTWARE to the replacement PCM. Is the action complete?	—	Verify repair	—

Downloaded from www.Manualslib.com manuals search engine

Diagnostic Trouble Code (DTC) P0135 HO2S Heater Circuit Bank 1 Sensor 1

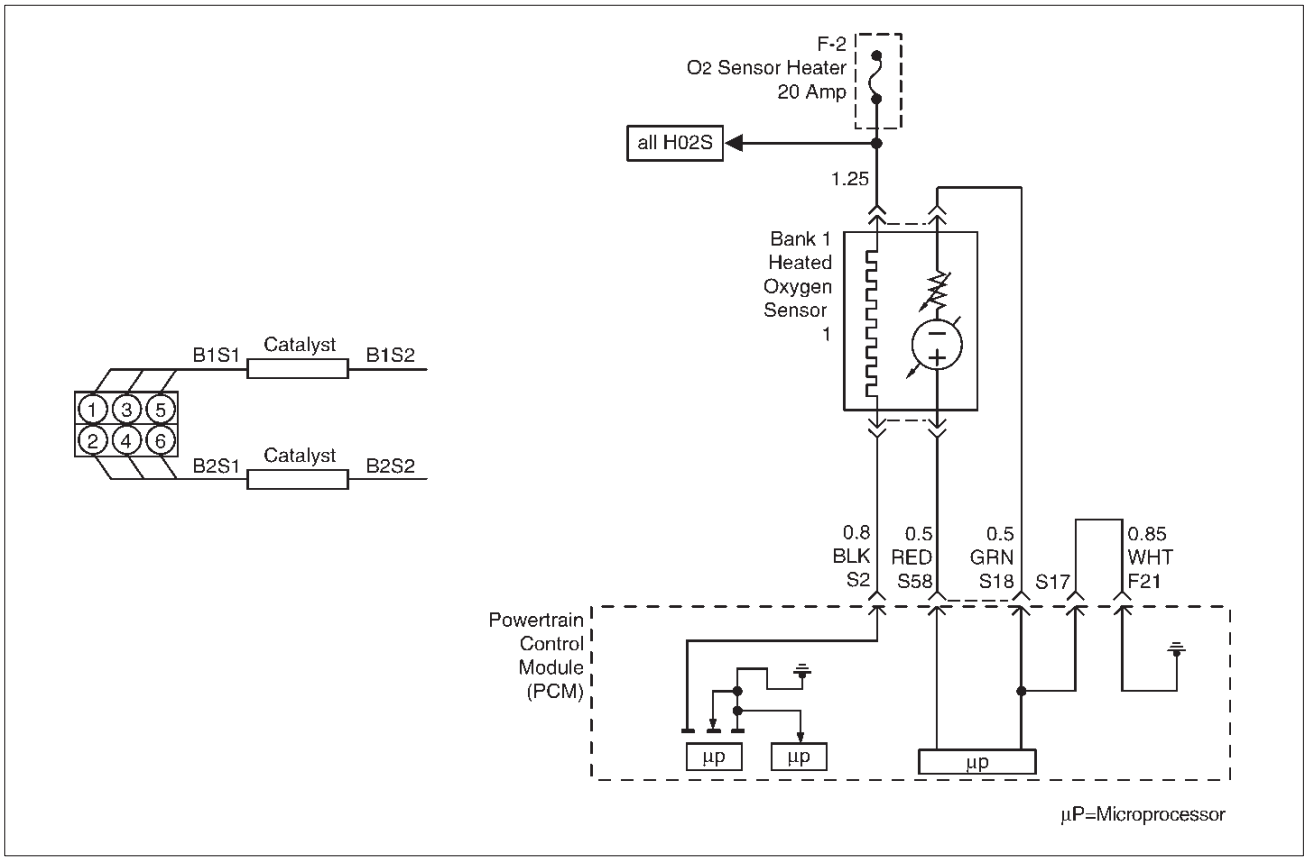

D06RY00171

Circuit Description

Heated oxygen sensors are used to minimize the amount of time required for "closed loop" fuel control operation and to allow accurate catalyst monitoring. The oxygen sensor heater greatly decreases the amount of time required for fuel control sensors Bank 1 HO2S 1 and Bank 2 HO2S 1 to become active. Oxygen sensor heaters are required by post-catalyst monitor sensors to maintain a sufficiently high temperature which allows accurate exhaust oxygen content readings further from the engine. The powertrain control module (PCM) will run the heater test only after a cold start (determined by engine coolant and intake air temperature at the time of start-up) and only once during an ignition cycle. When the engine is started the PCM will monitor the HO2S voltage. When the HO2S voltage indicates a sufficiently active sensor, the PCM looks at how much time has elapsed since start-up. If the PCM determines that too much time was required for the Bank 1 HO2S 1 to become active, a DTC P0135 will set. The time it should take the HO2S to reach operating temperature is based on the accumulated amount of air that has passed through the MAF sensor and into the engine (more accumulated air flow = shorter time to HO2S activity).

Conditions for Setting the DTC

- No related DTCs.
- Intake air temperature (IAT) is less than 32˚C (90˚F) at start-up.
- Engine coolant temperature (ECT) is less than 32˚C (90˚F) at start-up.
- IAT and ECT are within 6˚C (11˚F) of each other at start-up.
- Ignition voltage is between 11 and 18 V.
- Average mass air flow is less than 21 g/second during sample period.
- Bank 1 HO2S 1 voltage does not change more than 150 mV from the bias voltage (between 400 mV and 500 mV) for a longer amount of time than it should. The maximum amount of time to come up to operating range is 150 seconds. This warm-up time depends on the engine coolant temperature at start-up and accumulate air flow since start-up.

Action Taken When the DTC Sets

- The PCM will illuminate the malfunction indicator lamp (MIL) after the second consecutive trip in which the fault is detected.
- The PCM will store conditions which were present when the DTC was set as Freeze Frame and in the Failure Records data.

Conditions for Clearing the MIL/DTC

- The PCM will turn the MIL "OFF" on the third consecutive trip cycle during which the diagnostic has been run and the fault condition is no longer present.
- A history DTC P0135 will clear after 40 consecutive warm-up cycles have occurred without a fault.

Downloaded from www.Manualslib.com manuals search engine

- DTC P0135 can be cleared by using the Tech 2 “Clear Info” function or by disconnecting the PCM battery feed.

Diagnostic Aids

Check for the following conditions:

- Poor connection at PCM – Inspect harness connectors for backed-out terminals, improper mating, broken locks, improperly formed or damaged terminals, and poor terminal-to-wire connection.
- Damaged harness – Inspect the wiring harness for damage. If the harness appears to be OK, observe the ECT display on the Tech 2 while moving connectors and wiring harnesses related to the sensor. A change in the display will indicate the location of the fault.

Reviewing the Failure Records vehicle mileage since the diagnostic test last failed may help determine how often the condition that caused the DTC to be set occurs. This may assist in diagnosing the condition.

Test Description

Number(s) below refer to the step number(s) on the Diagnostic Chart.

2. The HO2S should be allowed to cool before performing this test. If the HO2S heater is functioning, the signal voltage will gradually increase or decrease as the sensor element warms. If the heater is not functioning, the HO2S signal will remain near the 450 mV bias voltage.
4. Ensures that the ignition feed circuit to the HO2S is not open or shorted. The test light should be connected to a good chassis ground, in case the HO2S low or HO2S heater ground circuit is faulty.
5. Checks the HO2S heater ground circuit.
6. Checks or an open or shorted HO2S heater element.
10. An open HO2S signal or low circuit can cause the HO2S heater to appear faulty. Check these circuits before replacing the sensor.

DTC P0135 – HO2S Heater Circuit Bank 1 Sensor 1

Step	Action	Value(s)	Yes	No
1	Was the “On-Board Diagnostic (OBD) System Check” performed?	—	Go to *Step 2*	Go to *OBD System Check*
2	NOTE: If the engine has just been operating ,allow the engine to cool for at least 15 minutes before proceeding. 1. Remove the fuel pump relay. 2. Connect a fused jumper at the fuel pump relay socket, between the battery positive at the relay and the relay wire that leads to the fuel pump and HO2S fuses. 3. Ignition “OFF.” 4. Install a Tech 2. 5. Ignition “ON,” engine “OFF.” 6. Monitor the Bank 1 HO2S 1 voltage for several minutes. Did the HO2S voltage go from bias voltage to above or below the specified values?	Above 650 mV or below 250 mV	Refer to *Diagnostic Aids*	Go to *Step 3*
3	Inspect the fuse for the Bank 1 HO2S 1 ignition feed. Is the fuse open?	—	Go to *Step 15*	Go to *Step 4*
4	1. Ignition “OFF.” 2. Raise the vehicle. 3. Disconnect the Bank 1 HO2S 1 electrical connector. 4. Using a test light connected to a good ground (do not use Bank 1 HO2S 1 heater ground or Bank 1 HO2S 1 low), probe the ignition feed circuit at the Bank 1 HO2S 1 electrical connector (PCM harness side). Does the test light illuminate?	—	Go to *Step 5*	Go to *Step 7*
5	Connect the test light between the Bank 1 HO2S 1 ignition feed and the Bank 1 HO2S 1 heater ground. Does the test light illuminate?	—	Go to *Step 6*	Go to *Step 8*

Downloaded from www.Manualslib.com manuals search engine

DTC P0135 – HO2S Heater Circuit Bank 1 Sensor 1 (Cont'd)

Step	Action	Value(s)	Yes	No
6	1. Allow the HO2S to cool for at least 15 minutes. 2. Using a DVM, measure the resistance between the Bank 1 HO2S 1 ignition feed and the Bank 1 HO2S 1 heater ground at the Bank 1 HO2S 1 pigtail. Is the HO2S heater resistance within the specified values?	3-6 ohms	Go to *Step 9*	Go to *Step 10*
7	Repair the open Bank 1 HO2S 1 ignition feed circuit to Bank 1 HO2S 1. Is the action complete?	—	Verify repair	—
8	Repair the open Bank 1 HO2S 1 heater ground circuit to Bank 1 HO2S 1. Is the action complete?	—	Verify repair	—
9	1. Check for a poor connection at the Bank 1 HO2S 1 harness terminals. 2. If a poor connection is found, replace terminals. Was a poor connection found?	—	Verify repair	Go to *Step 10*
10	Check for a poor Bank 1 HO2S 1 high or low circuit terminal connection at the Bank 1 HO2S 1 harness connector and replace terminal(s) if necessary. Did any terminals require replacement?	—	Verify repair	Go to *Step 11*
11	1. Ignition "OFF." 2. Disconnect the PCM and check the continuity of the Bank 1 HO2S 1 signal circuit and the Bank 1 HO2S 1 low circuit. 3. If the Bank 1 HO2S 1 high circuit or HO2S low circuit measures over 5 ohms, repair open or poor connection as necessary. Was a problem found?	—	Verify repair	Go to *Step 12*
12	Check for a poor Bank 1 HO2S 1 low circuit terminal connection at the PCM and replace the terminal if necessary. Did the terminal require replacement?	—	Verify repair	Go to *Step 13*
13	Check for a poor Bank 1 HO2S 1 high circuit terminal connection at the PCM and replace the terminal if necessary. Did the terminal require replacement?	—	Verify repair	Go to *Step 14*
14	Replace the Bank 1 HO2S 1. Is the action complete?	—	Verify repair	—
15	Locate and repair the short to ground in Bank 1 HO2S 1 ignition feed circuit and replace the fault fuse. Is the action complete?	—	Verify repair	—

Downloaded from www.Manualslib.com manuals search engine

Diagnostic Trouble Code (DTC)
P0137 HO2S Circuit Low Voltage Bank 1 Sensor 2

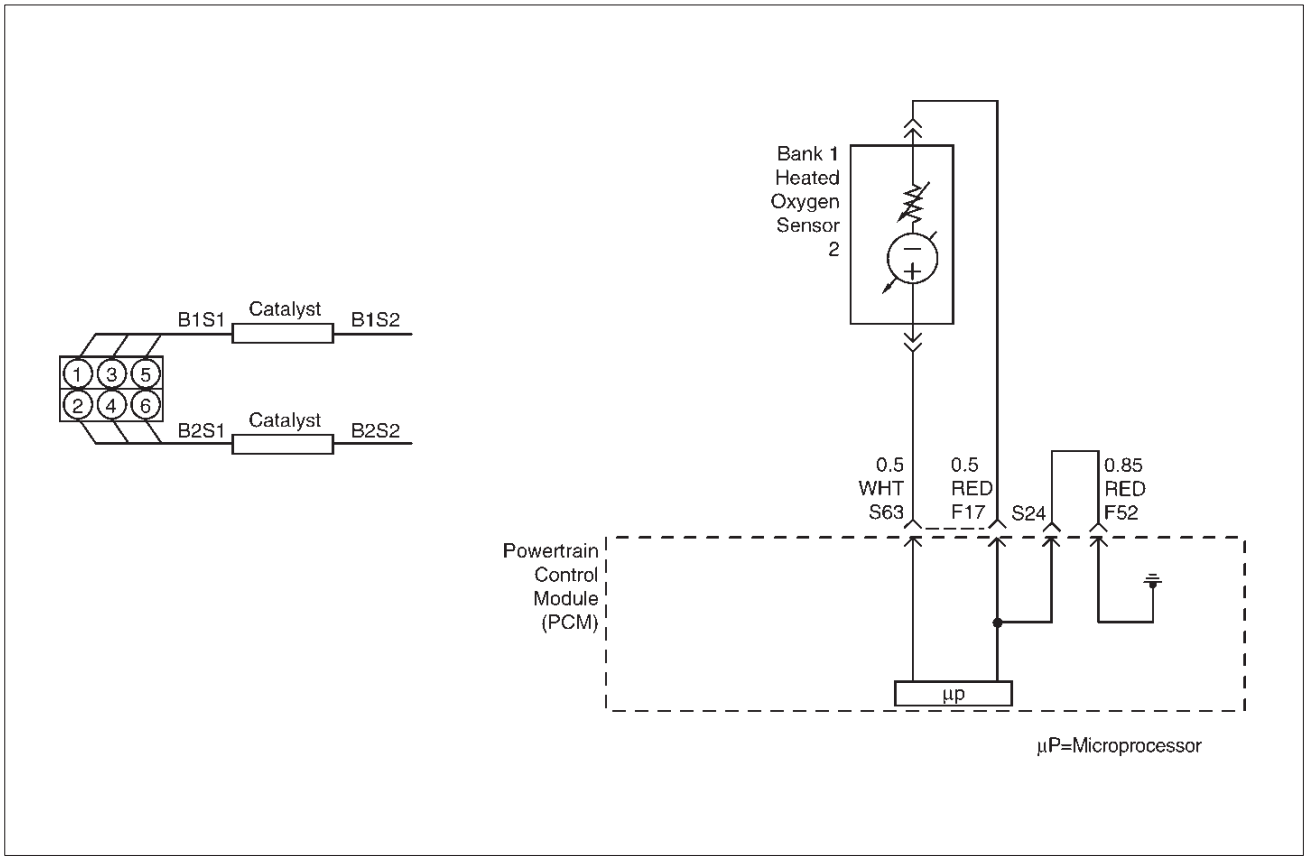

D06RY00172

Circuit Description

The powertrain control module (PCM) supplies bias voltage of about 450 mV between the heated oxygen sensor (HO2S) signal high and signal low circuits. When measured with a 10 megaohm impedance digital voltmeter, this may display as low as 350 mV. The oxygen sensor varies the voltage within a range of about 1000 mV when exhaust is rich, down through about 10 mV when the exhaust is lean. The PCM constantly monitors the HO2S signal during “closed loop” operation and compensates for a rich or lean condition by decreasing or increasing injector pulse width as necessary. If the Bank 1 HO2S 2 signal voltage remains excessively low for an extended period of time, DTC P0137 will be set.

Conditions for Setting the DTC

- No related DTCs.
- Engine is operating in “closed loop.”
- Engine coolant temperature is above 60˚C (140˚F).
- “Closed loop” commanded air/fuel ratio is between 14.5 and 14.8.
- Throttle angle is between 3% and 19%.
- Bank 1 HO2S 2 signal voltage remains below 22 mV during normal “closed loop” operation for a total of 106 seconds over a 125-second period of time.

OR

- Bank 1 HO2S 2 signal voltage remains below 400 mV during power enrichment mode fuel control operation for up to 5 seconds.

Action Taken When the DTC Sets

- The PCM will illuminate the malfunction indicator lamp (MIL) the first time the fault is detected.
- The PCM will store conditions which were present when the DTC set as Freeze Frame and in the Failure Records data.

Conditions for Clearing the MIL/DTC

- The PCM will turn the MIL “OFF” on the third consecutive trip cycle during which the diagnostic has been run and the fault condition is no longer present.
- A history DTC P0137 will clear after 40 consecutive warm-up cycles have occurred without a fault.
- DTC P0137 can be cleared by using the Tech 2 “Clear Info” function or by disconnecting the PCM battery feed.

Diagnostic Aids

Check for the following conditions:

- Heated oxygen sensor wiring – The sensor pigtail may be mispositioned and contacting the exhaust system.
- Poor PCM to engine grounds.
- Fuel pressure – A condition which causes a lean exhaust can cause DTC P0137 to set. The system will go lean if pressure is too low. The PCM can

Downloaded from www.Manualslib.com manuals search engine

compensate for some decrease. However, if fuel pressure is too low, a DTC P0137 may be set. Refer to *Fuel System Diagnosis*.

- Lean injector(s) – Perform "Injector Balance Test."
- Vacuum leaks – Check for disconnected or damaged vacuum hoses and for vacuum leaks at the intake manifold, throttle body, EGR system, and PCV system.
- Exhaust leaks – An exhaust leak may cause outside air to be pulled into the exhaust gas stream past the HO2S, causing the DTC P0137 to set. Check for exhaust leaks near the Bank 1 HO2S 2 sensor.
- MAF sensor – The system can go lean if the MAF sensor signal indicates an engine airflow measurement that is not correct. Disconnect the MAF sensor to see if the lean condition is corrected. If so, replace the MAF sensor.
- Fuel contamination – Water, even in small amounts, can be delivered to the fuel injectors. The water can cause a lean exhaust to be indicated. Excessive alcohol in the fuel can also cause this condition. Refer to *Fuel System Diagnosis* for procedure to check for fuel contamination.
- If none of the above conditions are present, replace the affected HO2S.

Test Description

Number(s) below refer to the step number(s) on the Diagnostic Chart.

3. DTC P0137 failing during operation may indicate a condition described in the "Diagnostic Aids" above. If the DTC0137 test passes while the Failure Records conditions are being duplicated, an intermittent condition is indicated.

Reviewing the Failure Records vehicle mileage since the diagnostic test last failed may help determine how often the condition that caused the DTC to be set occurs. This may assist in diagnosing the condition.

DTC P0137 –HO2S Circuit Low Voltage Bank 1 Sensor 2

Step	Action	Value(s)	Yes	No
1	Was the "On-Board Diagnostic (OBD) System Check" performed?	—	Go to *Step 2*	Go to *OBD System Check*
2	1. Install the Tech 2. 2. Run the engine at operating temperature. 3. Operate the vehicle within the parameters specified under "Conditions for Setting the DTC" criteria included in Diagnostic Support. 4. Using a Tech 2, monitor Bank 1 HO2S 2 voltage. Does the Bank 1 HO2S voltage remain below the specified value?	22 mV	Go to *Step 4*	Go to *Step 3*
3	1. Ignition "ON," engine "OFF," review and record Tech 2 Failure Records data and note parameters. 2. Operate the vehicle within Failure Records conditions as noted. 3. Using a Tech 2, monitor "DTC" info for DTC P0137 until the DTC P0137 test runs. 4. Note the test result. Does the Tech 2 indicate DTC P0137 failed this ignition?	—	Go to *Step 4*	Refer to *Diagnostic Aids*
4	1. Turn ignition "OFF." 2. Disconnect the PCM. 3. Check the Bank 1 HO2S 2 high and low signal circuits for a short to ground or a short to the heater ground circuit. Were Bank 1 HO2S 2 signal circuits shorted?	—	Go to *Step 5*	Go to *Step 6*
5	Repair the Bank 1 HO2S 2 signal circuit. Is the action complete?	—	Verify repair	—
6	1. Ignition "OFF." 2. Leave the PCM and HO2S 2 disconnected. 3. Check for continuity between the high and low signal circuits. Was there continuity between the high and low circuits?	—	Go to *Step 7*	Go to *Step 8*

Downloaded from www.Manualslib.com manuals search engine

DTC P0137 –HO2S Circuit Low Voltage Bank 1 Sensor 2 (Cont'd)

Step	Action	Value(s)	Yes	No
7	Repair the short between the high and low circuits. Is the action complete?	—	Verify repair	—
8	1. Ignition "OFF." 2. Reconnect the PCM, leave HO2S 2 disconnected. 3. Ignition "ON." Does the Tech 2 indicate Bank 1 HO2S 2 voltage near the specified value?	425-475 mV	Refer to *Diagnostic Aids*	Go to *Step 9*
9	Replace the PCM. **IMPORTANT:** The replacement PCM must be programmed. Refer to *On-Vehicle Service* in *Powertrain Control Module and Sensors* for procedures. And also refer to latest Service Bulletin. Check to see if the Latest software is released or not. And then Down Load the LATEST PROGRAMMED SOFTWARE to the replacement PCM. Is the action complete?	—	Verify repair	—

Downloaded from www.Manualslib.com manuals search engine

Diagnostic Trouble Code (DTC)
P0138 HO2S Circuit High Voltage Bank 1 Sensor 2

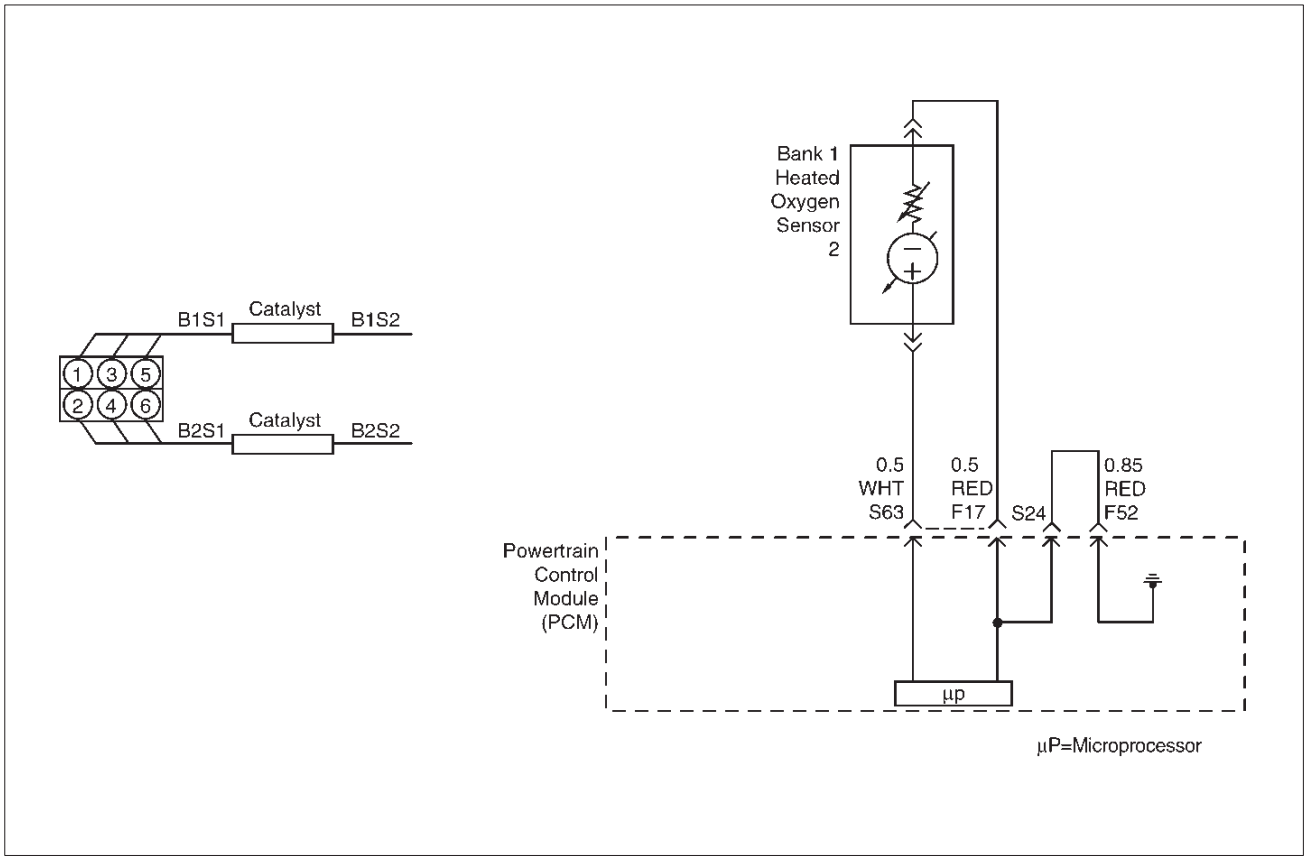

D06RY00172

Circuit Description

The powertrain control module (PCM) supplies bias voltage of about 450 mV between the heated oxygen sensor (HO2S) signal high and signal low circuits. When measured with a 10 megaohm digital voltmeter, this may display as low as 320 mV. The oxygen sensor varies the voltage within a range of about 1000 mV when exhaust is rich, down through about 10 mV when the exhaust is lean. The PCM constantly monitors the HO2S signal during "closed loop" operation and compensates for a rich or lean condition by decreasing or increasing injector pulse width as necessary. If the Bank 1 HO2S 2 voltage remains excessively high for an extended period of time, DTC P0138 will be set.

Conditions for Setting the DTC

- No related DTCs.
- Engine is operating in "closed loop."
- "Closed loop" commanded air/fuel ratio is between 14.5 and 14.8.
- Engine coolant temperature is above 60˚C (140˚F).
- Throttle angle is between 3% and 19%.
- Bank 1 HO2S 2 signal voltage remains above 952 mV during normal "closed loop" operation for a total of 106 seconds over a 125-second period of time.

OR

- Bank 1 HO2S 2 signal voltage remains above 500 mV during deceleration fuel cut–off mode operation for up to 3 seconds.

Action Taken When the DTC Sets

- The PCM will illuminate the malfunction indicator lamp (MIL) the first time the fault is detected.
- The PCM will store conditions which were present when the DTC was set as Freeze Frame and in the Failure Records data.

Conditions for Clearing the MIL/DTC

- The PCM will turn the MIL "OFF" on the third consecutive trip cycle during which the diagnostic has been run and the fault condition is no longer present.
- A history DTC P0138 will clear after 40 consecutive warm-up cycles have occurred without a fault.
- DTC P0138 can be cleared by using the Tech 2 "Clear Info" function or by disconnecting the PCM battery feed.

Diagnostic Aids

Check for the following conditions:

- Fuel pressure – An excessively rich fuel mixture can cause a DTC P0138 to be set. Refer to *Fuel System Diagnosis*.
- Rich injector(s) – Perform "Injector Balance Test."
- Leaking injector – Refer to *Fuel System Diagnosis*.

Downloaded from www.Manualslib.com manuals search engine

- Evaporative emissions (EVAP) canister purge – Check for fuel saturation. If full of fuel, check the canister control and hoses. Refer to *Evaporative Emission (EVAP) Control System*.
- MAF sensor –The system can go rich if the MAF sensor signal indicates an engine airflow measurement that is not correct. Disconnect the MAF sensor to see if the rich condition is corrected. If so, replace the MAF sensor.
- Check for a leak in fuel pressure regulator diaphragm by checking the vacuum line to the regulator for the presence of fuel. There should be no fuel in the vacuum line.
- TP sensor – An intermittent TP sensor output will cause the system to go rich, due to a false indication of the engine accelerating.
- Shorted Heated Oxygen Sensor (HO2S) – If the HO2S is internally shorted the HO2S voltage displayed on the Tech 2 will be over 1 volt. Try disconnecting the affected HO2S with the key "ON," engine "OFF." If the displayed HO2S voltage changes from over 1000 mV to around 450 mV, replace the HO2S. Silicon contamination of the HO2S can also cause a high HO2S voltage to be indicated. This condition is indicated by a powdery deposit on the portion of the HO2S exposed to the exhaust stream. If contamination is noticed, replace the affected HO2S.
- Open HO2S Signal Circuit of Faulty HO2S – A poor connection or open in the HO2S signal circuit can cause the DTC to set during deceleration fuel mode. An HO2S which is faulty and not allowing a full voltage swing between the rich and lean thresholds can also cause this condition. Operate the vehicle while monitoring the HO2S voltage with a Tech 2. If the HO2S voltage is limited within a range between 300 mV to 600 mV, check the HO2S signal and wiring and associated terminal connections.
- If none of the above conditions are present, replace the affected HO2S.

Test Description

Number(s) below refer to the step number(s) on the Diagnostic Chart.

3. DTC P0138 being set during deceleration fuel mode operation may indicate a condition described in the "Diagnostic Aids" above. If the DTC P0138 test passes while the Failure Records conditions are being duplicated, an intermittent condition is indicated.

Reviewing the Failure Records vehicle mileage since the diagnostic test last failed may help determine how often the condition that caused the DTC to be set occurs. This may assist in diagnosing the condition.

DTC P0138 – HO2S Circuit High Voltage Bank 1 Sensor 2

Step	Action	Value(s)	Yes	No
1	Was the "On-Board Diagnostic (OBD) System Check" performed?	—	Go to *Step 2*	Go to *OBD System Check*
2	1. Install the Tech 2. 2. Run the engine at operating temperature. 3. Operate the vehicle within the parameters specified under "Conditions for Setting the DTC" criteria included in Diagnostic Support. 4. Using a Tech 2, monitor Bank 1 HO2S 2 voltage. Does the Bank 1 HO2S voltage remain above the specified value?	952 mV (500 mV in deceleration fuel cutoff mode)	Go to *Step 4*	Go to *Step 3*
3	1. Ignition "ON," review and record Tech 2 Failure Records data. 2. Operate the vehicle within Failure Records conditions as noted. 3. Using a Tech 2, monitor "DTC" info for DTC P0138 until the DTC P0138 test runs. 4. Note the test result. Does the Tech 2 indicate DTC P0138 failed this ignition?	—	Go to *Step 4*	Refer to *Diagnostic Aids*
4	1. Ignition "OFF." 2. Disconnect Bank 1 HO2S 1. 3. Ignition "ON." 4. At the HO2S Bank 1 Sensor 2 connector (PCM side), use a DVM to measure voltages at the high and low signal terminals. Are the voltages above the specified range?	3-4 V	Go to *Step 5*	Go to *Step 6*

Downloaded from www.Manualslib.com manuals search engine

DTC P0138 – HO2S Circuit High Voltage Bank 1 Sensor 2 (Cont'd)

Step	Action	Value(s)	Yes	No
5	Repair short to voltage in the signal circuit. Is the action complete?	—	Verify repair	—
6	1. Ignition "ON," engine"OFF." 2. At Bank 1 HO2S 2 connector (PCM side) jumper both the HO2S high and low signal circuits (PCM side) to ground. 3. Using a Tech 2, monitor Bank 1 HO2S 2 voltage. Is Bank 1 HO2S 2 voltage below the specified value?	10 mV	Go to *Step 7*	Go to *Step 8*
7	1. Disconnect the jumpers to ground from Bank 1 HO2S 2 PCM–side connector. 2. With the HO2S 2 connector disconnected, monitor BANK 1 HO2S 2 voltage. Is the Bank 1 HO2S 2 voltage between the specified values?	425-475 mV	Refer to *Diagnostic Aids*	Go to *Step 8*
8	Replace the PCM. **IMPORTANT:** The replacement PCM must be programmed. Refer to *On-Vehicle Service* in *Powertrain Control Module and Sensors* for procedures. And also refer to latest Service Bulletin. Check to see if the Latest software is released or not. And then Down Load the LATEST PROGRAMMED SOFTWARE to the replacement PCM. Is the action complete?	—	Verify repair	—

Downloaded from www.Manualslib.com manuals search engine

Diagnostic Trouble Code(DTC)
P0140 HO2S Circuit Insufficient Activity Bank 1 Sensor 2

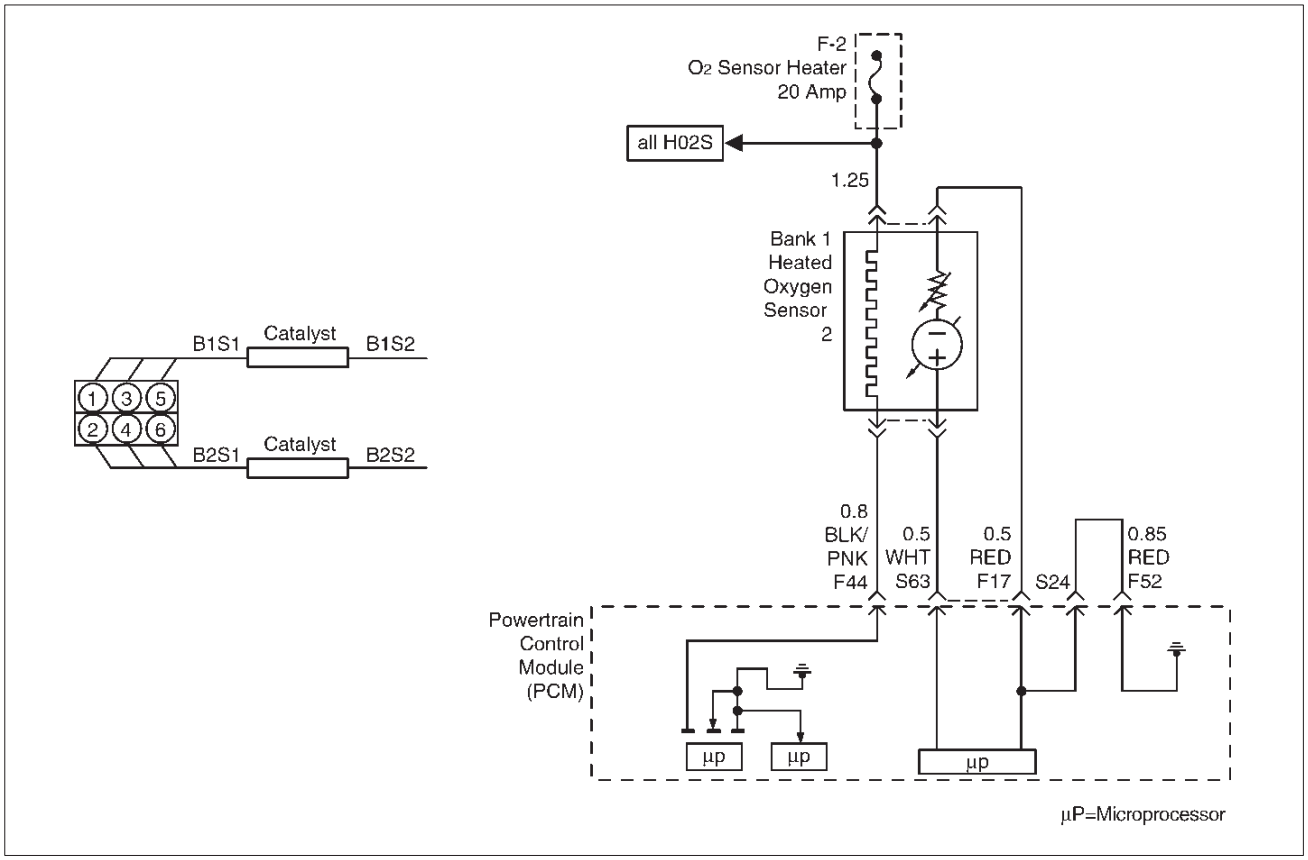

D06RY00173

Circuit Description

To control emissions of hydrocarbons (HC), carbon monoxide (CO), and oxides of nitrogen (NOx), a three-way catalytic converter is used. The catalyst within the converter promotes a chemical reaction which oxidizes the HC and CO present in the exhaust gas, converting them into harmless water vapor and carbon dioxide. The catalyst also reduces NOx, converting it to nitrogen. The powertrain control module (PCM) has the ability to monitor this process using the Bank 1 HO2S 1 and the Bank 1 HO2S 2 heated oxygen sensors. The Bank 1 HO2S 2 sensor produces an output signal which indicates the amount of oxygen present in the exhaust gas entering the three-way catalytic converter. The Bank 1 HO2S 2 sensor produces an output signal which indicates the oxygen storage capacity of the catalyst; this in turn indicates the catalyst's ability to convert exhaust gases efficiently. If catalyst is operating efficiently, the Bank 1 HO2S 1 signal will be far more active than that produced by the Bank 1 HO2S 2 sensor. If the Bank 1 HO2S 2 signal voltage remains between 400 mV and 500 mV for an extended period of time, DTC P0140 will be set. Heated oxygen sensors are used to minimize the amount of time required for "closed loop" fuel control operation and to allow accurate catalyst monitoring. The oxygen sensor heater greatly decreases the amount of time required for fuel control sensors Bank 1 HO2S 1 and Bank 2 HO2S 1 to become active. Oxygen sensor heaters are required by post-catalyst monitor sensors to maintain a sufficiently high temperature for accurate exhaust oxygen content readings further from the engine.

Conditions for Setting the DTC

- No related DTCs.
- Battery voltage is above 10 volts.
- Engine run time is longer than 40 seconds.
- Oxygen sensor heater is functioning properly.
- Engine is operating in "closed loop"
- Bank 1 HO2S 2 signal voltage remains between 426 mV and 474 mV for a total of 106 seconds over a 125-second period of time.

Action Taken When the DTC Sets

- The PCM will illuminate the malfunction indicator lamp (MIL) the first time the fault is detected.
- The PCM will store conditions which were present when the DTC was set as Freeze Frame and in the Failure Records data.

Conditions for Cleaning the MIL/DTC

- The PCM will turn the MIL "OFF" on the third consecutive trip cycle during which the diagnostic has been run and the fault condition is no longer present.
- A history DTC P0140 will clear after 40 consecutive warm-up cycles have occurred without a fault.
- DTC P0140 can be cleared by using the Tech 2 "Clear Info" function or by disconnecting the PCM battery feed.

Downloaded from www.Manualslib.com manuals search engine

Diagnostic Aids

Check for the following conditions:

- Poor connection or damaged harness– Inspect the harness connectors for backed-out terminals, improper mating, broken locks, improperly formed or damaged terminals, poor terminal-to-wire connection, and damaged harness.
- Faulty HO2S heater or heater circuit–With the ignition"ON," engine "OFF," the HO2S voltage displayed on a Tech 2 should gradually drop to below 250 mV. If not, disconnect the HO2S and connect a test light between the HO2S ignition feed and heater ground circuits. If the test light does not light, repair the open ignition feed or sensor ground circuit as necessary. If the test light lights and the HO2S signal and low circuits are OK, replace the HO2S.
- Intermittent test–With the ignition "ON," monitor the HO2S signal voltage while moving the wiring harness and related connectors. If the fault is induced, the HO2S signal voltage will change. This may help isolate the location of the malfunction.

Test Description

Number (s) below refer to the step number (s) on the Diagnostic Chart.

3. If the DTC P0140 test passes while the Failure Records conditions are being duplicated, an intermittent condition is indicated.

Reviewing the Failure Records vehicle mileage since the diagnostic test last failed may help determine how often the condition that caused the DTC to be set occurs. This may assist in diagnosing the condition.

DTC P0140 – HO2S Circuit Insufficient Activity BANK 1 SENSOR 2

Step	Action	Value(s)	Yes	No
1	Was the "On-Board Diagnostic (OBD) System Check" performed?	—	Go to *Step 2*	Go to *OBD System Check*
2	1. Install the Tech 2. 2. Run the engine at operating temperature. 3. Operate the engine above 1200 RPM for two minutes. Does the Tech 2 indicate Bank 1 HO2S 2 voltage varying outside the specified values?	425-475 mV	Go to *Step 3*	Go to *Step 4*
3	1. Ignition "ON," engine "OFF," review and record Tech 2 Failure Records data and note parameters. 2. Operate the vehicle within Failure Records conditions as noted. 3. Using a Tech 2, monitor "DTC" info for DTC P0140 until the DTC P0140 test runs. 4. Note the test result. Does the Tech 2 indicate DTC P0140 failed this ignition?	—	Go to *Step 4*	Refer to *Diagnostic Aids*
4	Check for a damaged harness. Was a problem found?	—	Verify repair	Go to *Step 5*
5	Check for poor Bank 1 HO2S 2 high and low circuit terminal connections at the Bank 1 HO2S 2 harness connector and replace terminal(s) if necessary. Did any terminals require replacement?	—	Verify repair	Go to *Step 6*
6	Check for poor Bank 1 HO2S 2 high and low circuit terminal connections at the PCM and replace terminal(s) if necessary. Did any terminals require replacement?	—	Verify repair	Go to *Step 7*
7	1. Ignition "OFF." 2. With the PCM disconnected, check continuity of the Bank 1 HO2S 2 high circuit. 3. If the Bank 1 HO2S 2 high circuit measures over 5.0 ohms, repair open or poor connection as necessary. Was a Bank 1 HO2S 2 high circuit problem found and corrected?	—	Verify repair	Go to *Step 8*

Downloaded from www.Manualslib.com manuals search engine

DTC P0140 – HO2S Circuit Insufficient Activity BANK 1 SENSOR 2 (Cont'd)

Step	Action	Value(s)	Yes	No
8	1. Ignition "OFF." 2. With the PCM disconnected, check continuity of the Bank 1 HO2S 2 high circuit. 3. If the Bank 1 HO2S 2 low circuit measures over 5.0 ohms, repair open or poor connection as necessary. Was a Bank 1 HO2S 2 low circuit problem found and corrected?	—	Verify repair	Go to *Step 9*
9	1. Ignition "ON," engine"OFF." 2. Disconnect Bank 1 HO2S 2 and jumper the HO2S high and low circuits (PCM side) to ground. 3. Using a Tech 2, monitor Bank 1 HO2S 2 voltage. Is Bank 1 HO2S 2 voltage in the specified range?	0-10 mV	Go to *Step 10*	Go to *Step 11*
10	Replace Bank 1 HO2S 2. Is the action complete?	—	Verify repair	—
11	Replace the PCM. **IMPORTANT:** The replacement PCM must be programmed. Refer to *On-Vehicle Service* in *Powertrain Control Module and Sensors* for procedures. And also refer to latest Service Bulletin. Check to see if the Latest software is released or not. And then Down Load the LATEST PROGRAMMED SOFTWARE to the replacement PCM. Is the action complete?	—	Verify repair	—

Downloaded from www.Manualslib.com manuals search engine

Diagnostic Trouble Code (DTC) P0141 HO2S Heater Circuit Bank 1 Sensor 2

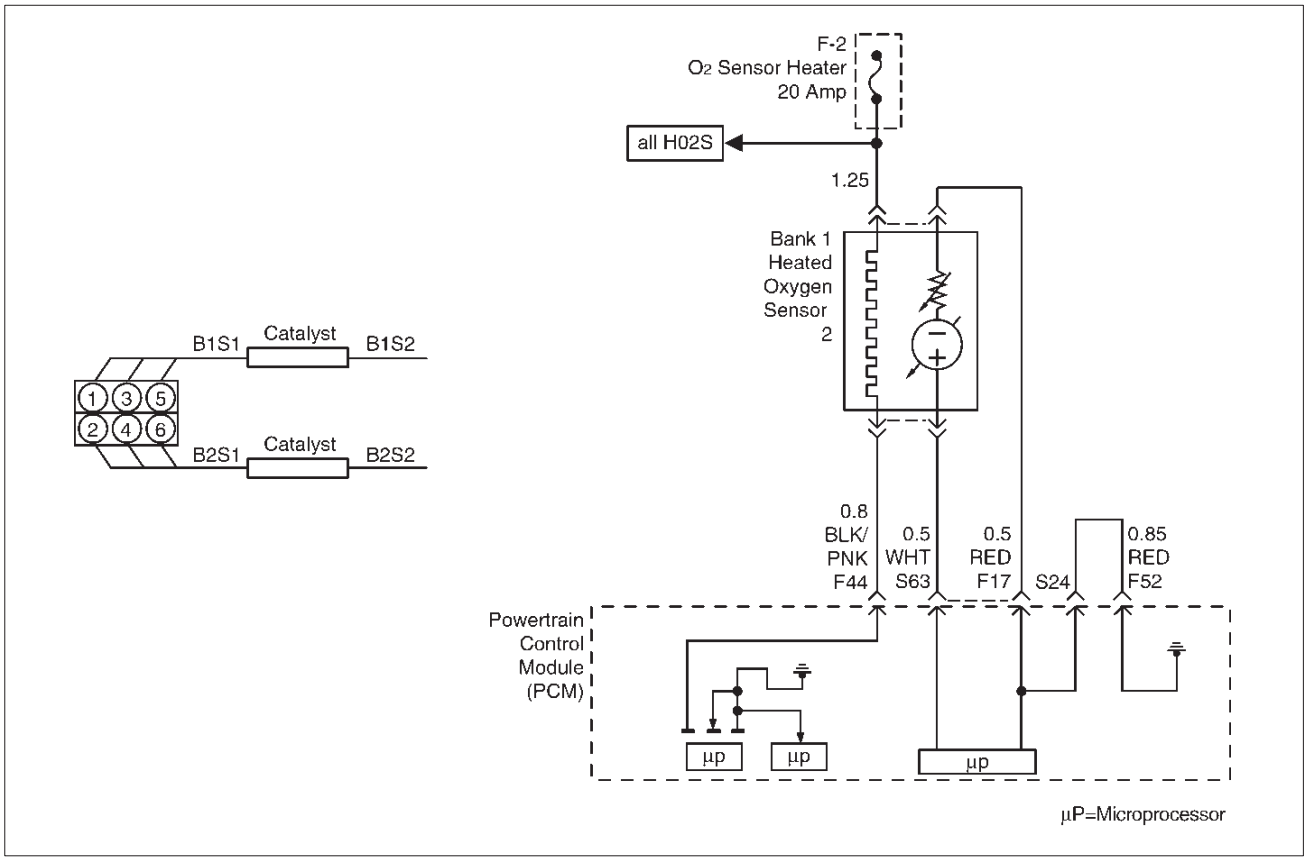

D06RY00173

Circuit Description

Heated oxygen sensors are used to minimize the amount of time required for closed loop fuel control operation and to allow accurate catalyst monitoring. The oxygen sensor heater greatly decreases the amount of time required for fuel control sensors Bank 1 HO2S 1 and Bank 2 HO2S 1 to become active. Oxygen sensor heaters are required by post-catalyst monitor sensors to maintain a sufficiently high temperature which allows accurate exhaust oxygen content readings further from the engine.

The powertrain control module (PCM) will run the heater test only after a cold start (determined by engine coolant and intake air temperature at the time of start-up) and only once during an ignition cycle. When the engine is started the PCM will monitor the HO2S voltage. When the Bank HO2S voltage indicates a sufficiently active sensor, the PCM looks at how much time has elapsed since start-up. If the PCM determines that too much time was required for the Bank 1 HO2S 2 to become active, a DTC P0141 will set. The time it should take the HO2S to reach operating temperature is based on the total amount of air that has passed through the MAF sensor and into the engine (more total airflow = shorter time to HO2S activity).

Conditions for Setting the DTC

- No related DTCs.
- Intake air temperature (IAT) is less than 32˚C (90˚F) at start-up.
- Engine coolant temperature (ECT) is less than 32˚C (90˚F) at start-up.
- IAT and ECT are within 6˚C (11˚F) of each other at start-up.
- Ignition voltage is between 11 volts and 18 volts.
- Average mass airflow is less than 23 g/second during the sample period.
- Bank 1 HO2S 2 voltage does not change more than 150 mV from the bias voltage (between 400 mV–500 mV) for a longer amount of time than it should. The maximum amount of time to come up to operating range is 120 seconds. This warm-up time depends on the engine coolant temperature at start-up and accumulated air flow since start-up.

Action Taken When the DTC Sets

- The PCM will illuminate the malfunction indicator lamp (MIL) after the second consecutive trip in which the fault is detected.
- The PCM will store conditions which were present when the DTC was set as Freeze Frame and in the Failure Records data.

Conditions for Clearing the MIL/DTC

- The PCM will turn the MIL “OFF” on the third consecutive trip cycle during which the diagnostic has been run and the fault condition is no longer present.
- A history DTC P0141 will clear after 40 consecutive warm-up cycles have occurred without a fault.

Downloaded from www.Manualslib.com manuals search engine

- DTC P0141 can be cleared by using the Tech 2 “Clear Info” function or by disconnecting the PCM battery feed.

Diagnostic Aids

Check for the following conditions:

- Poor connection at PCM – Inspect harness connectors for backed-out terminals, improper mating, broken locks, improperly formed or damaged terminals, and poor terminal-to-wire connection.
- Damaged harness – Inspect the wiring harness for damage. If the harness appears to be OK, observe the display on the Tech 2 while moving connectors and wiring harnesses related to the sensor. A change in the display will indicate the location of the fault.

Reviewing the Failure Records vehicle mileage since the diagnostic test last failed may help determine how often the condition that caused the DTC to be set occurs. This may assist in diagnosing the condition.

Test Description

Number(s) below refer to the step number(s) on the Diagnostic Chart.

2. The HO2S should be allowed to cool before performing this test. If the HO2S heater is functioning, the signal voltage will gradually increase or decrease as the sensor element warms. If the heater is not functioning, the HO2S signal will remain near the 450 mV bias voltage.
4. This ensures that the ignition feed circuit to the HO2S is not open or shorted. The test light should be connected to a good chassis ground, in case the HO2S low or HO2S heater ground circuit is faulty.
5. This checks the HO2S heater ground circuit.
6. This checks for an open or shorted HO2S heater element.
11. An open HO2S signal or low circuit can cause the HO2S heater to appear faulty. Check these circuits before replacing the sensor.

DTC P0141 – HO2S Heater Circuit Bank 1 Sensor 2

Step	Action	Value(s)	Yes	No
1	Was the “On-Board Diagnostic (OBD) System Check” performed?	—	Go to *Step 2*	Go to *OBD System Check*
2	NOTE: If the engine has just been operating, allow the engine to cool for at least 15 minutes before proceeding. 1. Remove the fuel pump relay. 2. Connect a fused jumper at the fuel pump relay socket, between the battery positive at the relay and the relay wire that leads to the fuel pump and HO2S fuses. 3. Ignition “OFF.” 4. Install a Tech 2. 5. Ignition “ON,” engine “OFF.” 6. Monitor the Bank 1 HO2S 1 voltage for several minutes. Did the HO2S voltage go from bias voltage to above or below the specified values?	Above 650 mV or below 250 mV	Refer to *Diagnostic Aids*	Go to *Step 3*
3	Inspect the fuse for Bank 1 HO2S 2 ignition feed. Is the fuse open?	—	Go to *Step 15*	Go to *Step 4*
4	1. Ignition “OFF.” 2. Raise the vehicle. 3. Disconnect the Bank 1 HO2S 2 electrical connector. 4. Using a test light connected to a good ground (do not use Bank 1 HO2S 2 heater ground or Bank 1 HO2S 2 low), probe the ignition feed circuit at the Bank 1 HO2S 2 electrical connector (PCM harness side). Does the test light illuminate?	—	Go to *Step 5*	Go to *Step 7*

Downloaded from www.Manualslib.com manuals search engine

DTC P0141 – HO2S Heater Circuit Bank 1 Sensor 2 (Cont'd)

Step	Action	Value(s)	Yes	No
5	Connect the test light between the Bank 1 HO2S 2 ignition feed and the Bank 1 HO2S 2 heater ground. Does the test light illuminate?	—	Go to *Step 6*	Go to *Step 8*
6	1. Allow the HO2S to cool for at least 15 minutes. 2. Using a DVM, measure the resistance between the Bank 1 HO2S 2 ignition feed and the Bank 1 HO2S 2 heater ground at the Bank 1 HO2S 2 pigtail. Is the HO2S resistance within the specified values?	3-6 ohms	Go to *Step 9*	Go to *Step 10*
7	Repair the open Bank 1 HO2S 2 ignition feed circuit to Bank 1 HO2S 2. Is the action complete?	—	Verify repair	—
8	Repair the open Bank 1 HO2S 2 heater ground circuit. Is the action complete?	—	Verify repair	—
9	1. Check for a poor connection at the Bank 1 HO2S 2 harness terminals. 2. If a poor connection is found, replace the terminals. Was a poor connection found?	—	Verify repair	Go to *Step 10*
10	1. Ignition "OFF." 2. Disconnect the PCM and check the continuity of the Bank 1 HO2S 2 signal circuit and the Bank 1 HO2S 2 low circuit. 3. If the Bank 1 HO2S 2 signal circuit or the HO2S low circuit measures over 5 ohms, repair the open or poor connection as necessary. Was a problem found?	—	Verify repair	Go to *Step 11*
11	1. Ignition "OFF." 2. Disconnect the PCM and check the continuity of the Bank 1 HO2S 1 signal circuit and the Bank 1 HO2S 1 low circuit. 3. If the Bank 1 HO2S 1 high circuit or the HO2S low circuit measures over 5 ohms, repair the open or poor connection as necessary. Was a problem found?	—	Verify repair	Go to *Step 12*
12	Check for a poor Bank 1 HO2S 2 low circuit terminal connection at the PCM and replace the terminal if necessary. Did the terminal require replacement?	—	Verify repair	Go to *Step 13*
13	Check for a poor Bank 1 HO2S 2 high circuit terminal connection at the PCM and replace the terminal if necessary. Did the terminal require replacement?	—	Verify repair	Go to *Step 14*
14	Replace Bank 1 HO2S 2. Is the action complete?	—	Verify repair	—
15	Locate and repair the short to ground in Bank 1 HO2S 2 ignition feed circuit and replace the faulty fuse. Is the action complete?	—	Verify repair	—

Downloaded from www.Manualslib.com manuals search engine

Diagnostic Trouble Code (DTC)
P0151 HO2S Circuit Low Voltage Bank 2 Sensor 1

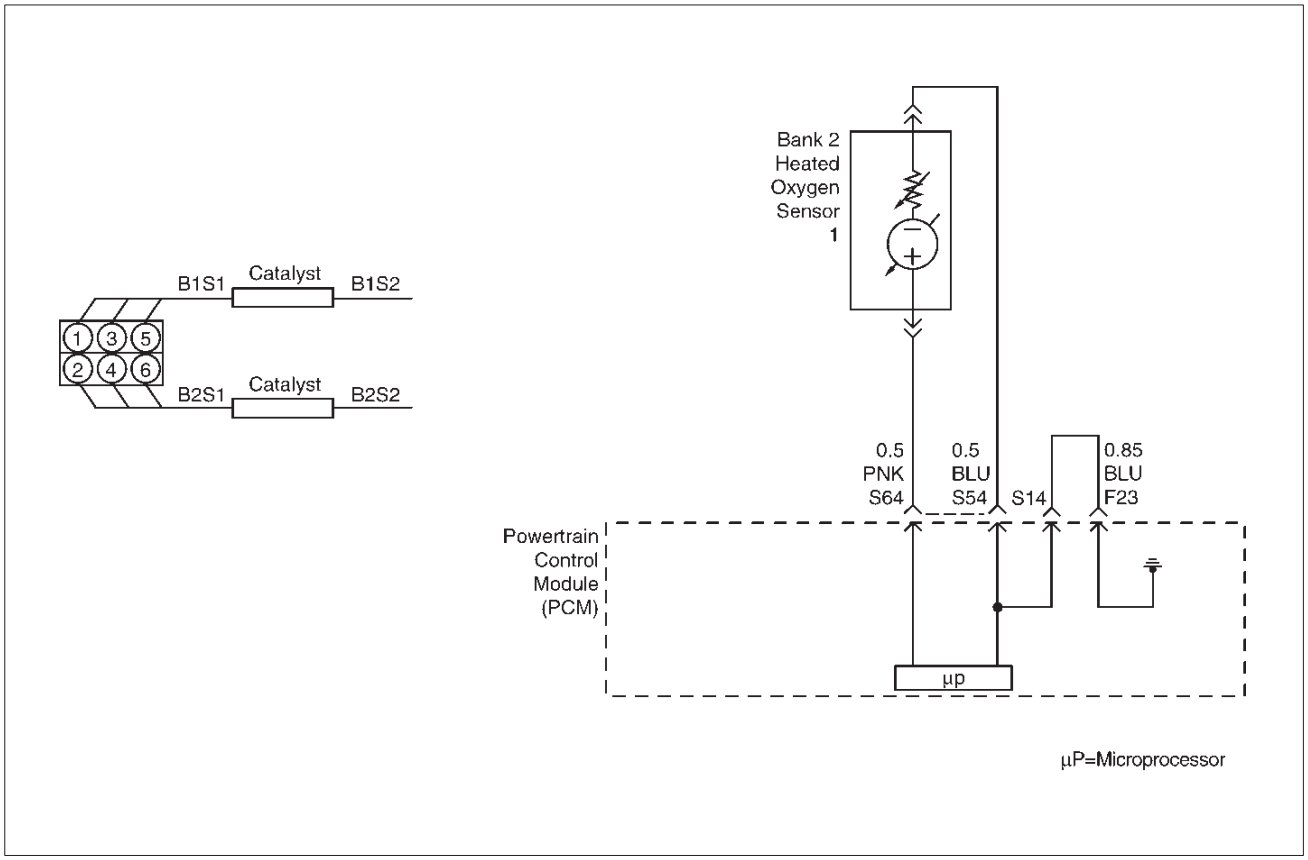

D06RY00174

Circuit Description

The powertrain control module (PCM) supplies a bias voltage of about 450 mV between the heated oxygen sensor (HO2S) signal high and signal low circuits. When measured with a 10 megaohm digital voltmeter, this may display as low as 320 mV. The oxygen sensor varies the voltage within a range of about 1000 mV when the exhaust is rich, down through about 10 mV when exhaust is lean. The PCM constantly monitors the HO2S signal during "closed loop" operation and compensates for a rich or lean condition by decreasing or increasing injector pulse width as necessary. If the Bank 2 HO2S 1 voltage remains excessively low for an extended period of time, DTC P0151 will be set.

Conditions for Setting the DTC

- No related DTCs.
- The engine is operating in "closed loop."
- Engine coolant temperature is above 60˚C (140˚F).
- "Closed loop" commanded air/fuel ratio is between 14.5 and 14.8.
- Throttle angle is between 3% and 19%.
- Bank 2 HO2S 1 signal voltage remains below 22 mV during normal "closed loop" operation for a total of 77 seconds over a 90-second period of time.

Action Taken When the DTC Sets

- The PCM will illuminate the malfunction indicator lamp (MIL) the first time the fault is detected.
- The PCM will store conditions which were present when the DTC was set as Freeze Frame and in the Failure Records data.
- "Open loop" fuel control will be in effect.

Conditions for Clearing the MIL/DTC

- The PCM will turn the MIL "OFF" on the third consecutive trip cycle during which the diagnostic has been run and the fault condition is no longer present.
- A history DTC P0151 will clear after 40 consecutive warm-up cycles have occurred without a fault.
- DTC P0151 can be cleared by using the Tech 2 "Clear Info" function or by disconnecting the PCM battery feed.

Diagnostic Aids

Check for the following conditions:

- Heated oxygen sensor wiring – The sensor pigtail may be mispositioned and contacting the exhaust system.
- Poor PCM to engine block grounds.
- Fuel pressure – The system will go lean if pressure is too low. The PCM can compensate for some decrease. However, if fuel pressure is too low, a DTC P0151 may be set. Refer to *Fuel System Diagnosis*.
- Lean injector(s) – Perform "Injector Balance Test."

Downloaded from www.Manualslib.com manuals search engine

- Vacuum leaks – Check for disconnected or damaged vacuum hoses and for vacuum leaks at the intake manifold, throttle body, EGR system, and PCV system.
- Exhaust leaks – An exhaust leak may cause outside air to be pulled into the exhaust gas stream past the HO2S, causing the system to appear lean. Check for exhaust leaks that may cause a false lean condition to be indicated.
- MAF sensor –The system can go lean if the MAF sensor signal indicates an engine airflow measurement that is not correct. Disconnect the MAF sensor to see if the lean condition is corrected. If so, replace the MAF sensor.
- Fuel contamination – Water, even in small amounts, can be delivered to the fuel injectors. The water can cause a lean exhaust to be indicated. Excessive alcohol in the fuel can also cause this condition. Refer to *Fuel System Diagnosis* for the procedure to check for fuel contamination.
- If none of the above conditions are present, replace the affected HO2S.

Test Description

Number(s) below refer to the step number(s) on the Diagnostic Chart.

3. DTC P0151 failing during operation may indicate a condition described in the “Diagnostic Aids” above. If the DTC P0151 test passes while the Failure Records conditions are being duplicated, an intermittent condition is indicate.

Reviewing the Failure Records vehicle mileage since the diagnostic test last failed may help determine how often the condition that caused the DTC to be set occurs. This may assist in diagnosing the condition.

DTC P0151 – HO2S Circuit Low Voltage Bank 2 Sensor 1

Step	Action	Value(s)	Yes	No
1	Was the “On-Board Diagnostic (OBD) System Check” performed?	—	Go to *Step 2*	Go to *OBD System Check*
2	1. Install the Tech 2. 2. Run the engine at operating temperature. 3. Operate the vehicle within the parameters specified under “Conditions for Setting the DTC” criteria included in Diagnostic Support. 4. Using a Tech 2, monitor Bank 2 HO2S 1 voltage. Does the Bank 2 HO2S 1 voltage remain below the specified value?	22 mV	Go to *Step 4*	Go to *Step 3*
3	1. Ignition “ON,” engine “OFF,” review and record Tech 2 Failure Records data and note parameters. 2. Operate the vehicle within Failure Records conditions as noted. 3. Using a Tech 2, monitor “DTC” info for DTC P0151 until the DTC P0151 test runs. 4. Note test result. Does the Tech 2 indicate DTC P0151 failed this ignition?	—	Go to *Step 4*	Refer to *Diagnostic Aids*
4	1. Turn ignition “OFF.” 2. Disconnect the PCM. 3. Check the Bank 2 HO2S 1 high and low signal circuits for a short to ground or a short to the heater ground circuit. Were Bank 2 HO2S 1 signal circuits shorted?	—	Go to *Step 5*	Go to *Step 6*
5	Repair the Bank 2 HO2S 1 signal circuit. Is the action complete?	—	Verify repair	—
6	1. Ignition “OFF.” 2. Leave the PCM and HO2S 1 disconnected. 3. Check for continuity between the high and low signal circuits. Was there continuity between the high and low circuits?	—	Go to *Step 7*	Go to *Step 8*

Downloaded from www.Manualslib.com manuals search engine

DTC P0151 – HO2S Circuit Low Voltage Bank 2 Sensor 1 (Cont'd)

Step	Action	Value(s)	Yes	No
7	Repair the short between the high and low circuits. Is the action complete?	—	Verify repair	—
8	1. Ignition "OFF." 2. Reconnect the PCM, leave HO2S disconnected. 3. Ignition "ON." Does the Tech 2 indicate Bank 2 HO2S 1 voltage near the specified value?	425-475 mV	Refer to *Diagnostic Aids*	Go to *Step 9*
9	Replace the PCM. **IMPORTANT:** The replacement PCM must be programmed. Refer to *On-Vehicle Service* in *Powertrain Control Module and Sensors* for procedures. And also refer to latest Service Bulletin. Check to see if the Latest software is released or not. And then Down Load the LATEST PROGRAMMED SOFTWARE to the replacement PCM. Is the action complete?	—	Verify repair	—

Downloaded from www.Manualslib.com manuals search engine

Diagnostic Trouble Code (DTC)
P0152 HO2S Circuit HIGH Voltage Bank 2 Sensor 1

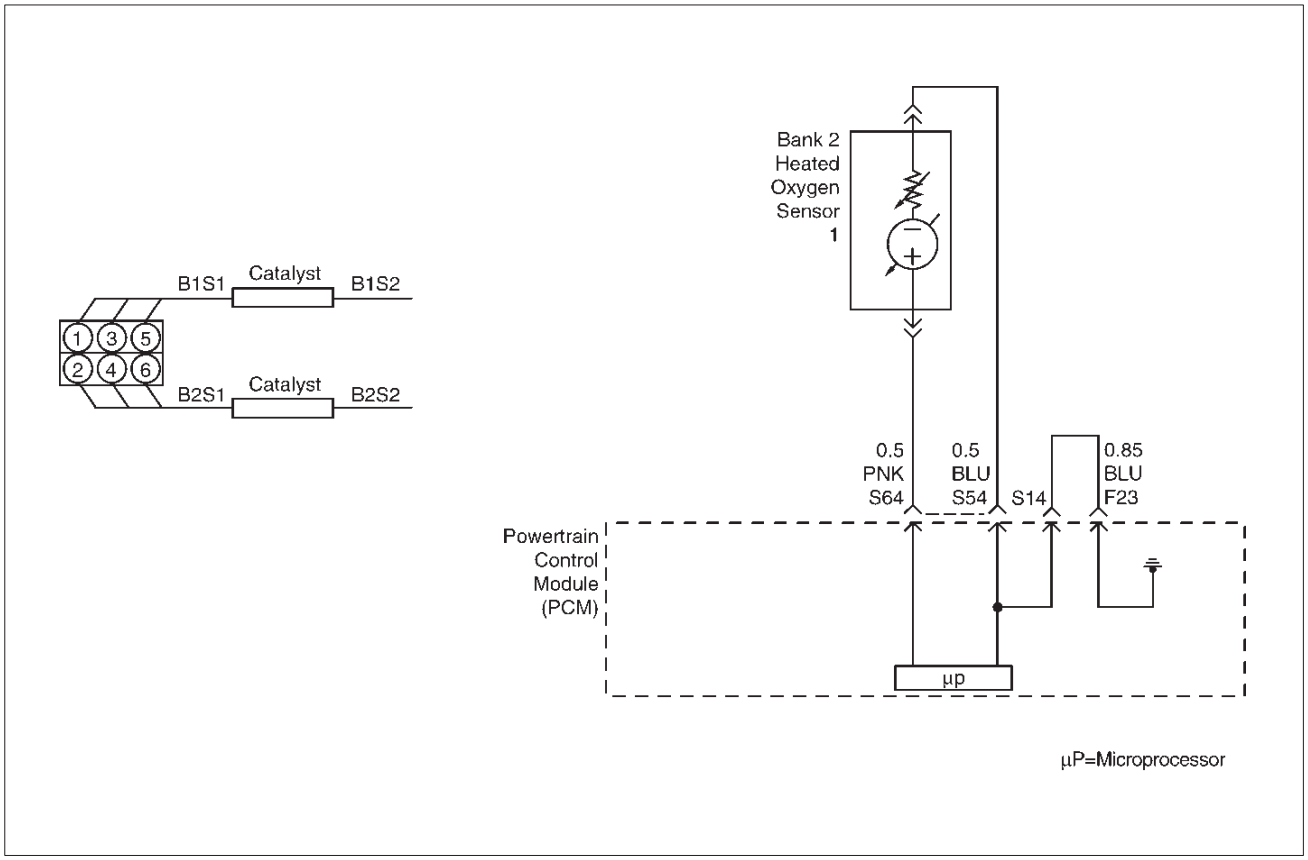

D06RY00174

Circuit Description

The powertrain control module (PCM) supplies a bias voltage of about 450 mV between the heated oxygen sensor (HO2S) signal high and signal low circuits. When measured with a 10 megaohm digital voltmeter, this may display as low as 320 mV. The oxygen sensor varies the voltage within a range of about 1000 mV when the exhaust is rich, down through about 10 mV when exhaust is lean. The PCM constantly monitors the HO2S signal during "closed loop" operation and compensates for a rich or lean condition by decreasing or increasing the injector pulse width as necessary. If the Bank 2 HO2S 1 voltage remains excessively high for an extended period of time, DTC P0152 will be set.

Conditions for Setting the DTC

- No related DTCs.
- The engine is operating in "closed loop."
- The engine coolant temperature is above 60˚C (140˚F).
- "Closed loop" commanded air/fuel ratio between 14.5 and 14.8.
- Bank 2 HO2S 1 signal voltage remains above 952 mV during normal "closed loop" operation for a total of 77 seconds over a 90-second period.

OR

- Bank 2 HO2S 1 signal voltage remains above 500 mV during deceleration fuel cutoff mode operation for up to 3 seconds.

Action Taken When the DTC Sets

- The PCM will illuminate the malfunction indicator lamp (MIL) the first time the fault is detected.
- The PCM will store conditions which were present when the DTC was set as Freeze Frame and in the Failure Records data.
- "Open loop" fuel control will be in effect.

Conditions for Clearing the MIL/DTC

- The PCM will turn the MIL "OFF" on the third consecutive trip cycle during which the diagnostic has been run and the fault condition is no longer present.
- A history DTC P0152 will clear after 40 consecutive warm-up cycles have occurred without a fault.
- DTC P0152 can be cleared by using the Tech 2 "Clear Info" function or by disconnecting the PCM battery feed.

Diagnostic Aids

Check for the following conditions:

- Fuel pressure – The system will go rich if pressure is too high. The PCM can compensate for some increase. However, if fuel pressure is too high, a DTC P0152 may be set. Refer to *Fuel System Diagnosis*.
- Rich injector(s) – Perform "Injector Balance Test."
- Leaking injector – Refer to *Fuel System Diagnosis*.
- Evaporative emissions (EVAP) system – Check the canister for fuel saturation. If the canister is full of fuel, check EVAP control system components and hoses.

Downloaded from www.Manualslib.com manuals search engine

Refer to *Evaporative Emission (EVAP) Control System*.

- MAF sensor – The system can go rich if the MAF sensor signal indicates an engine airflow measurement that is not correct. Disconnect the MAF sensor to see if rich condition is corrected. If so, replace MAF sensor.
- Check for leaking fuel pressure regulator diaphragm by checking vacuum line to regulator for the presence of fuel. There should be no fuel in the vacuum line.
- TP sensor – An intermittent TP sensor output will cause the system to go rich, due to a false indication of the engine accelerating.
- Shorted Heated Oxygen Sensor (HO2S)– If the HO2S is internally shorted, the HO2S voltage displayed on the Tech 2 will be over 1 volt. Try disconnecting the affected HO2S with the key "ON," engine "OFF." If the displayed HO2S voltage changes from over 1000 mV to around 450 mV, replace the HO2S. Silicon contamination of the HO2S can cause a high HO2S voltage to be indicated. This condition is indicated by powdery deposit on the portion of the HO2S exposed to the exhaust stream. If contamination is noticed, replace the affected HO2S.
- Open HO2S Signal Circuit of Faulty HO2S– A poor connection or open in the HO2S signal circuit can cause the DTC to set during deceleration fuel mode. An HO2S which is faulty and not allowing a full voltage switch between the rich and lean thresholds can also cause the condition. Operate the vehicle while monitoring the HO2S voltage with a Tech 2. If the HO2S is limited within a range between 300 mV to 600 mV, check the HO2S signal circuit wiring and associated terminal connections.
- If none of the above conditions are present, replace the affected HO2S.

Test Description

Number(s) below refer to the step number(s) on the Diagnostic Chart.

3. DTC P0152 failing during deceleration fuel cutoff mode operation may indicate a condition described in the "Diagnostic Aids" above. If the DTC P0152 test passes while the Failure Records conditions are being duplicated, an intermittent condition is indicated.

Reviewing the Failure Records vehicle mileage since the diagnostic test last failed may help determine how often the condition that caused the DTC to be set occurs. This may assist in diagnosing the condition.

DTC P0152 – HO2S Circuit High Voltage Bank 2 Sensor 1

Step	Action	Value(s)	Yes	No
1	Was the "On-Board Diagnostic (OBD) System Check" performed?	—	Go to *Step 2*	Go to *OBD System Check*
2	1. Install the Tech 2. 2. Engine is at operating temperature. 3. Operate the vehicle within the parameters specified under "Conditions for Setting the DTC" criteria included in Diagnostic Support. 4. Using a Tech 2, monitor Bank 2 HO2S 1 voltage. Does the Bank 2 HO2S 1 voltage remain above the specified value?	952 mV (500 mV in deceleration fuel cut-off mode)	Go to *Step 4*	Go to *Step 3*
3	1. Ignition "ON." 2. Review and record Tech 2 Failure Records data. 3. Operate the vehicle within Failure Records conditions as noted. 4. Using a Tech 2, monitor "DTC" info for DTC P0152 until the DTC P0152 test runs. 5. Note the test result. Does the Tech 2 indicate DTC P0152 failed this ignition?	—	Go to *Step 4*	Refer to *Diagnostic Aids*
4	1. Ignition "OFF." 2. Disconnect Bank 2 HO2S 1. 3. Ignition "ON." 4. At HO2S Bank 2 Sensor 1 connector (PCM side) use a DVM to measure voltages at the high and low signal terminals. Are the voltages in the specified range?	3-4 V	Go to *Step 5*	Go to *Step 6*
5	Repair short to voltage in signal circuit. Is the action complete?	—	Verify repair	—

Downloaded from www.Manualslib.com manuals search engine

DTC P0152 – HO2S Circuit High Voltage Bank 2 Sensor 1 (Cont'd)

Step	Action	Value(s)	Yes	No
6	1. Ignition "ON," engine"OFF." 2. At Bank 2 HO2S 1 connector (PCM side) jumper both the HO2S high and low signal circuits (PCM side) to ground. 3. Using a Tech 2, monitor Bank 2 HO2S 1 voltage. Is Bank 2 HO2S 1 voltage below the specified value?	10 mV	Go to *Step 7*	Go to *Step 8*
7	1. Disconnect the jumpers to ground from Bank 2 HO2S 1 PCM-side connector. 2. With the HO2S 1 connector disconnected, monitor Bank 2 HO2S 1 voltage. Is the Bank 2 HO2S 1 voltage between the specified values?	425-475 mV	Refer to *Diagnostic Aids*	Go to *Step 8*
8	Replace the PCM. **IMPORTANT:** The replacement PCM must be programmed. Refer to *On-Vehicle Service* in *Powertrain Control Module and Sensors* for procedures. And also refer to latest Service Bulletin. Check to see if the Latest software is released or not. And then Down Load the LATEST PROGRAMMED SOFTWARE to the replacement PCM. Is the action complete?	—	Verify repair	—

Downloaded from www.Manualslib.com manuals search engine

Diagnostic Trouble Code (DTC) P0153 HO2S Slow Response Bank 2 Sensor 1

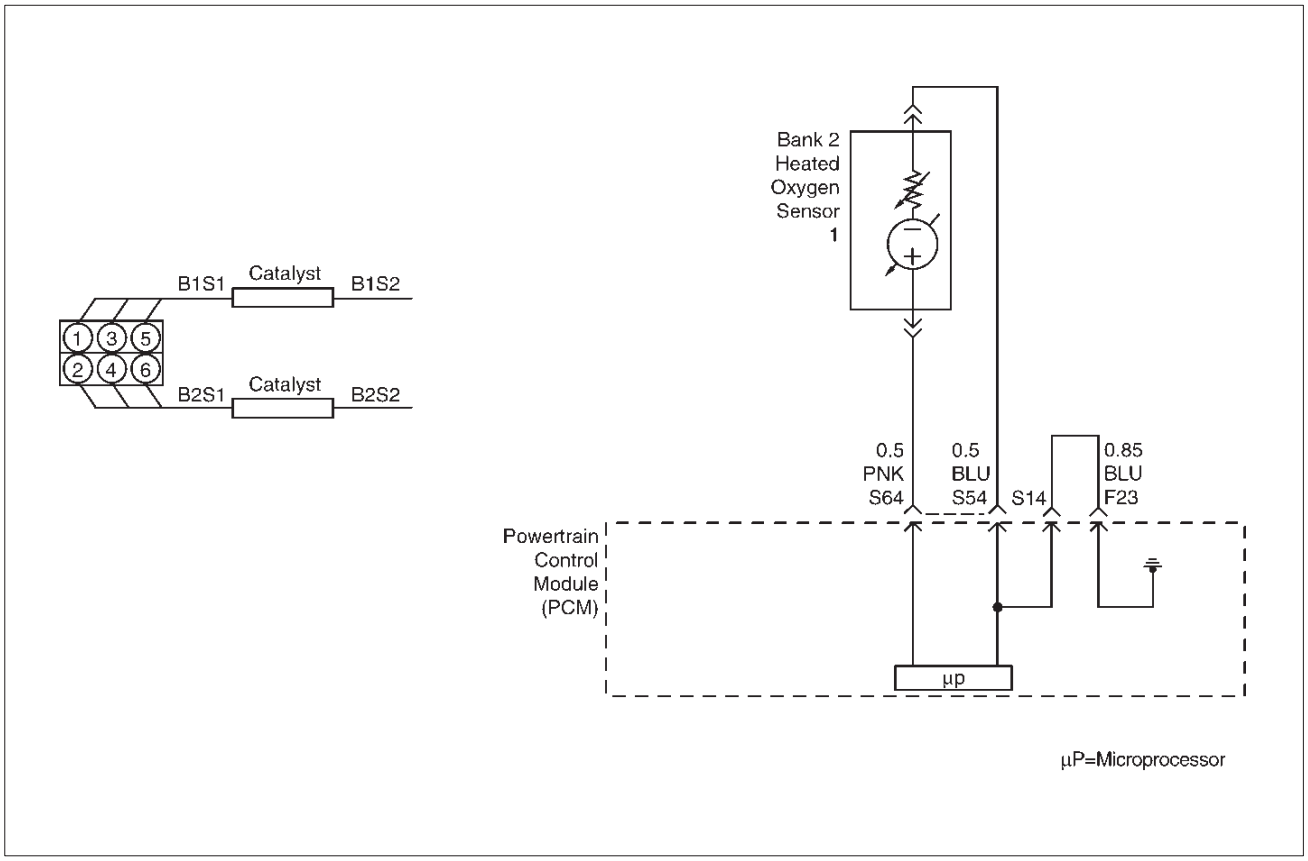

D06RY00174

Circuit Description

The powertrain control module (PCM) continuously monitors the heated oxygen sensor (HO2S) activity for 90 seconds after "closed loop" has been enabled. During the monitoring period the PCM counts the number of times that a rich-to-lean and lean-to-rich response is indicated and adds the amount of time it took to complete all rich-to-lean transitions and lean-to-rich transitions. With this information, an average time for rich-to-lean and lean-to-rich transitions can be determined. If the average response time of either transition is too slow, a DTC P0153 will be set.

A lean-to-rich transition is indicated when the HO2S voltage changes from less than 300 mV to greater than 600 mV. A rich-to-lean transition is indicated when the HO2S voltage changes from more than 600 mV to less than 300 mV. An HO2S that responds too slowly is likely to be faulty and should be replaced.

Conditions for Setting the DTC

- No related DTCs.
- Engine coolant temperature (ECT) is above 50°C (122°F) for automatic transmission; 75° (167°F) for manual transmission.
- The engine is operating in "closed loop."
- Engine has been running for at least one minute.
- Canister purge duty cycle is above 2%.
- Engine speed is between 1500 RPM and 3000 RPM.
- Mass air flow is between 9 g/second and 42 g/second.
- All above conditions are met for 3 seconds.
- 90 seconds after "closed loop" has been enabled, Bank 2 HO2S 1 average transition time between 300 mV and 600 mV is too slow. The lean-to-rich average transition response time was longer than 94 milliseconds or the rich-to-lean average transition response time was longer than 105 milliseconds.

Action Taken When the DTC Sets

- The PCM will illuminate the malfunction indicator lamp (MIL) after the second consecutive trip in which the fault is detected.
- The PCM will store conditions which were present when the DTC set as Freeze Frame and in the Failure Records data.
- "Open loop" fuel control will be in effect.

Conditions for Clearing the MIL/DTC

- The PCM will turn the MIL "OFF" on the third consecutive trip cycle during which the diagnostic has been run and the fault condition is no longer present.
- A history DTC P0153 will clear after 40 consecutive warm-up cycles have occurred without a fault.
- DTC P0153 can be cleared by using the Tech 2 "Clear Info" function or by disconnecting the PCM battery feed.

Diagnostic Aids

Check for the following conditions:

- Poor connection at PCM – Inspect harness connectors for backed-out terminals, improper mating, broken

Downloaded from www.Manualslib.com manuals search engine

locks, improperly formed or damaged terminals, and poor terminal-to-wire connection.

- Damaged harness – Inspect the wiring harness for damage. If the harness appears to be OK, observe the Bank 2 HO2S 1 display on the Tech 2 while moving connectors and wiring harnesses related to the sensor. A change in the display will indicate the location of the fault.

Reviewing the Failure Records vehicle mileage since the diagnostic test last failed may help determine how often the condition that caused the DTC to be set occurs. This may assist in diagnosing the condition.

Test Description

Number(s) below refer to the step number(s) on the Diagnostic Chart.

2. Verifies that the fault is currently present.

3. HO2S transition time, ratio mean volts and switching DTCs set for multiple sensors indicate probable contamination. Before replacing the sensors, isolate and correct the source of the contamination to avoid damaging the replacement sensors.

Downloaded from www.Manualslib.com manuals search engine

DTC P0153 – HO2S Slow Response Bank 2 Sensor 1

Step	Action	Value(s)	Yes	No
1	Was the “On-Board Diagnostic (OBD) System Check” performed?	—	Go to *Step 2*	Go to *OBD System Check*
2	NOTE: If any DTCs are set, (except P0133, P1133, P1134, P1153, and/or P1154), refer to those DTCs before proceeding with this diagnostic chart. 1. Install the Tech 2. 2. Idle the engine at operating temperature. 3. Operate the vehicle within parameters specified under “Conditions for Setting the DTC” criteria included in Diagnostic Support. 4. Using a Tech 2, monitor “DTC” info for DTC P0153 until the DTC P0153 test runs. 5. Note the test result. Does the Tech 2 indicate DTC P0153 failed this ignition?	—	Go to *Step 3*	Refer to *Diagnostic Aids*
3	Did the Tech 2 also indicate DTC P0153, P1133, P1134, P1153, and/or P1154 test failed this ignition?	—	Go to *Step 17*	Go to *Step 4*
4	Check for leaks at the pipe joints. Are the joints leaking?	—	Go to *Step 5*	Go to *Step 6*
5	Tighten the U-bolt nuts at the leaking joint. Is your action complete?	—	Go to *Step 2*	—
6	Check for gaskets that are damage or improperly installed. Are there damaged or misaligned gaskets?	—	Go to *Step 7*	Go to *Step 8*
7	1. Replace the damaged gaskets. 2. Align the connections. 3. Tighten the connections. Is your action complete?	—	Go to *Step 2*	—
8	Check for loose exhaust flange connections. Are the flange connections loose?	—	Go to *Step 9*	Go to *Step 10*
9	Tighten the stud nuts or bolts to specifications. Is your action complete?	—	Go to *Step 2*	—
10	Check for burned or corroded exhaust pipes. Are the exhaust pipes burned or corroded?	—	Go to *Step 11*	Go to *Step 12*
11	Replace the exhaust pipes, as required. Is your action complete?	—	Go to *Step 2*	—
12	Check for leaks at the exhaust manifold. Are there leaks at the exhaust manifold?	—	Go to *Step 13*	Go to *Step 14*
13	Tighten the bolts to specifications or replace the manifold if necessary. Is your action complete?	—	Go to *Step 2*	—

Downloaded from www.Manualslib.com manuals search engine

DTC P0153 – HO2S Slow Response Bank 2 Sensor 1 (Cont'd)

Step	Action	Value(s)	Yes	No
14	1. Visually/physically inspect the following items: ● Ensure that the Bank 2 HO2S 1 is securely installed. ● Check for corrosion on terminals. ● Check terminal tension (at Bank 2 HO2S 1 and at the PCM). ● Check for damaged wiring. Was a problem found in any of the above areas?	—	Go to *Step 18*	Go to *Step 15*
15	1. Disconnect Bank 2 HO2S 1. 2. Ignition "ON." 3. Using a DVM at the PCM side of the HO2S 1 connector, measure the voltage between the high signal circuit and ground. Are both voltages in the specified range?	3-4 V	Go to *Step 16*	Go to *Step 19*
16	1. With Bank 2 HO2S 1 disconnected, jumper the high and low (PCM side) signal circuits to ground. 2. Ignition "ON." 3. Using a Tech 2, monitor the Bank 2 HO2S 1 voltage. Does the Tech 2 indicate less than 10 mV and immediately return to about 450 mV when the jumper is removed?	—	Go to *Step 21*	Go to *Step 22*
17	Replace the affected heated oxygen sensors. NOTE: Before replacing the sensors, the cause of the contamination must be determined and corrected. ● Fuel contamination. ● Use of improper RV sealant. ● Engine oil/coolant consumption. Is the action complete?	—	Verify repair	—
18	Repair condition as necessary. Is the action complete?	—	Verify repair	—
19	Check for faulty PCM connections or terminal damage. Is the action complete?	—	Verify repair	Go to *Step 20*
20	Repair open, short or grounded signal circuit. Is the action complete?	—	Verify repair	—
21	Replace Bank 2 HO2S 1. Is the action complete?	—	Verify repair	—
22	Replace the PCM. **IMPORTANT:** The replacement PCM must be programmed. Refer to *On-Vehicle Service* in *Powertrain Control Module and Sensors* for procedures. And also refer to latest Service Bulletin. Check to see if the Latest software is released or not. And then Down Load the LATEST PROGRAMMED SOFTWARE to the replacement PCM. Is the action complete?	—	Verify repair	—

Downloaded from www.Manualslib.com manuals search engine

Diagnostic Trouble Code (DTC)
P0154 HO2S Circuit Insufficient Activity Bank 2 Sensor 1

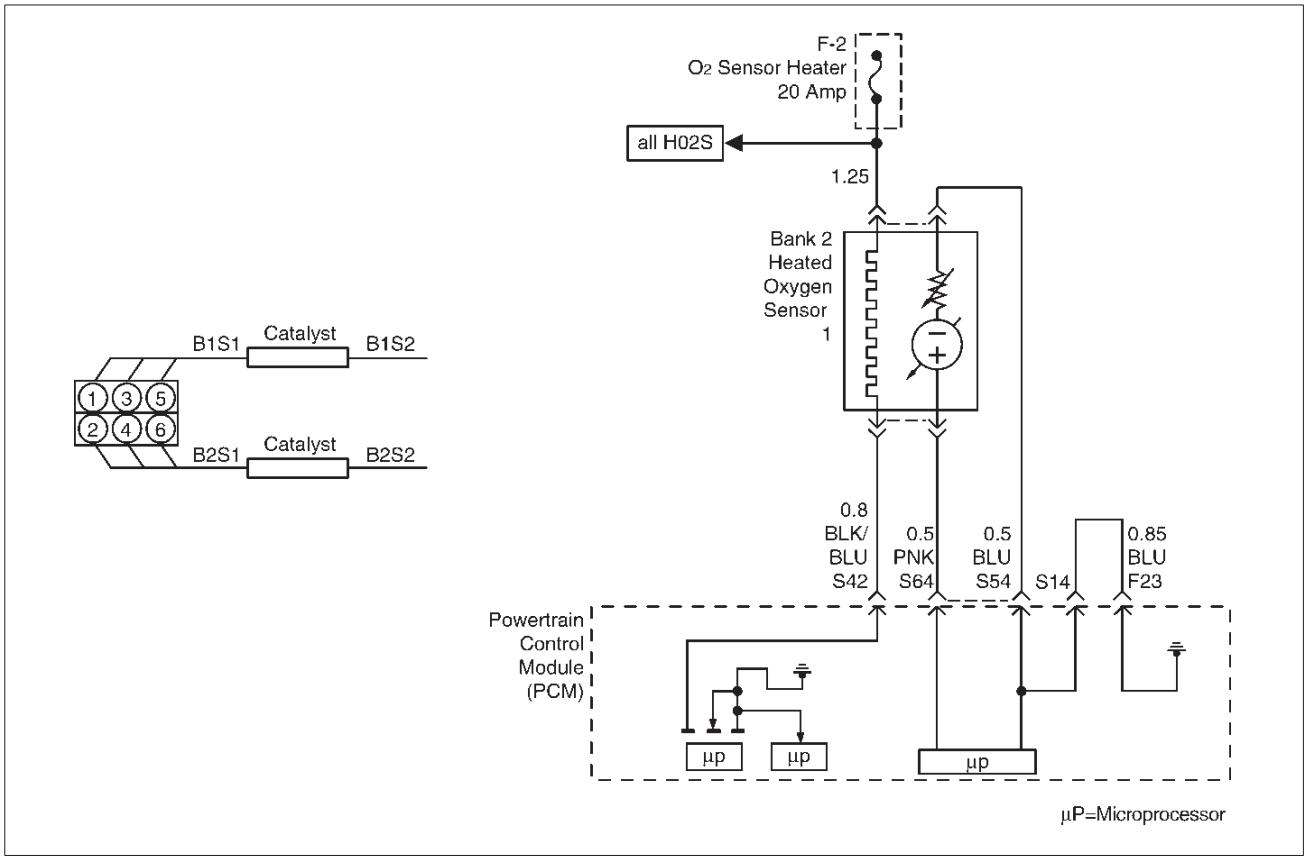

D06RY00175

Circuit Description

The powertrain control module (PCM) supplies a bias voltage of about 450 mV between the heated oxygen sensor (HO2S) high and low circuits. When measured with a 10 megaohm digital voltmeter, this may display as low as 320 mV. The oxygen sensor varies the voltage within a range of about 1000 mV when the exhaust is rich, down through about 10 mV when exhaust is lean. The PCM constantly monitors the HO2S signal during “closed loop” operation and compensates for a rich or lean condition by decreasing or increasing injector pulse width as necessary. If the Bank 2 HO2S 1 voltage remains at or near the 450 mV bias for an extended period of time, DTC P0154 will be set, indicating an open sensor signal or sensor low circuit.

Heated oxygen sensors are used to minimize the amount of time required for “closed loop” fuel control operation and to allow accurate catalyst monitoring. The oxygen sensor heater greatly decreases the amount of time required for fuel control sensors Bank 1 HO2S 1 and Bank 2 HO2S 1 to become active. Oxygen sensor heaters are required by post-catalyst monitor sensors to maintain a sufficiently high temperature for accurate exhaust oxygen content readings further from the engine.

Conditions for Setting the DTC

- No related DTCs.
- Battery voltage is above 10 volts.
- Engine running time is longer than 40 seconds.
- Oxygen sensor heater is functioning properly.
- Bank 2 HO2S 1 signal voltage remains between 400 mV and 500 mV for a total of 77 seconds over a 90-second period of time.

Action Taken When the DTC Sets

- The PCM will illuminate the malfunction indicator lamp (MIL) the first time the fault is detected.
- The PCM will store conditions which were present when the DTC was set as Freeze Frame and in the Failure Records data.
- “Open loop” fuel control will be in effect.

Conditions for Clearing the MIL/DTC

- The PCM will turn the MIL “OFF” on the third consecutive trip cycle during which the diagnostic has been run and the fault condition is no longer present.
- A history DTC P0154 will clear after 40 consecutive warm-up cycles have occurred without a fault.
- DTC P0154 can be cleared by using the Tech 2 “Clear Info” function or by disconnecting the PCM battery feed.

Diagnostic Aids

Check for the following conditions:

- Poor connection or damaged harness – Inspect the harness connectors for backed-out terminals,

Downloaded from www.Manualslib.com manuals search engine

improper mating, broken locks, improperly formed or damaged terminals, poor terminal-to-wire-connection, and damaged harness.

- Faulty HO2S heater or heater circuit – With the ignition "ON," engine "OFF," the HO2S 1 voltage displayed on the Tech 2 is normally 455-460 mV. A reading over 1000 mV indicates a signal line shorted to voltage. A reading under 5 mV indicates a signal line shorted to ground or signal lines shorted together. If not, disconnect the HO2S and connect a test light between the HO2S ignition feed and heater ground circuits. If the test light does not light for 2 seconds when the ignition is turned on, repair the open ignition feed or sensor ground circuit as necessary. If the test light lights and the HO2S signal and low circuits are OK, replace the HO2S.
- Intermittent test – With the ignition "ON," monitor the HO2S signal voltage while moving the wiring harness and related connectors. If the fault is induced, the HO2S signal voltage will change. This may help isolate the location of the malfunction.

Test Description

Number(s) below refer to the step number(s) on the Diagnostic Chart.

3. If the DTC P0154 test passes while the Failure Records conditions are being duplicated, an intermittent condition is indicated.

Reviewing the Failure Records vehicle mileage since the diagnostic test last failed may help determine how often the condition that caused the DTC to be set occurs. This may assist in diagnosing the condition.

DTC P0154 –HO2S Circuit Insufficient Activity Bank 2 Sensor 1

Step	Action	Value(s)	Yes	No
1	Was the "On-Board Diagnostic (OBD) System Check" performed?	—	Go to *Step 2*	Go to *OBD System Check*
2	1. Install the Tech 2. 2. Run the engine at operating temperature. 3. Operate the engine above 1200 RPM for two minutes. Does the Tech 2 indicate Bank 2 HO2S 1 voltage varying outside the specified values?	400-500 mV	Go to *Step 3*	Go to *Step 4*
3	1. Ignition "ON," engine "OFF." 2. Review and record Tech 2 Failure Records data and note parameters. 3. Operate the vehicle within Failure Records conditions as noted. 4. Using a Tech 2, monitor "DTC" info for DTC P0154 until the DTC P0154 test runs. 5. Note the test result. Does the Tech 2 indicate DTC P0154 failed this ignition?	—	Go to *Step 4*	Refer to *Diagnostic Aids*
4	Check for a damaged harness. Was a problem found?	—	Verify repair	Go to *Step 5*
5	Check for a poor Bank 2 HO2S 1 high and low circuit terminal connections at the Bank 2 HO2S 1 harness connector and replace terminal(s) if necessary. Did any terminals require replacement?	—	Verify repair	Go to *Step 6*
6	Check for a poor Bank 2 HO2S 1 high and low circuit terminal connections at the PCM and replace terminal(s) if necessary. Did the terminal require replacement?	—	Verify repair	Go to *Step 7*

Downloaded from www.Manualslib.com manuals search engine

DTC P0154 –HO2S Circuit Insufficient Activity Bank 2 Sensor 1 (Cont'd)

Step	Action	Value(s)	Yes	No
7	1. Ignition "OFF." 2. With the PCM disconnected, check continuity of the Bank 2 HO2S 1 high circuit. 3. If the Bank 2 HO2S 1 high circuit measures over 5.0 ohms, repair open or poor connection as necessary. Was a Bank 2 HO2S 1 high circuit problem found and corrected?	—	Verify repair	Go to *Step 8*
8	1. Ignition "OFF." 2. With the PCM disconnected, check continuity of the Bank 2 HO2S 1 low circuit. 3. If the Bank 2 HO2S 1 low circuit measures over 5.0 ohms, repair open or poor connection as necessary. Was a Bank 2 HO2S 1 low circuit problem found and corrected?	—	Verify repair	Go to *Step 9*
9	1. Ignition "ON," engine "OFF." 2. Disconnect Bank 2 HO2S 1 and jumper the HO2S high and low circuits (PCM side) to ground. 3. Using a Tech 2, monitor Bank 2 HO2S 1 voltage. Is the Bank 2 HO2S 1 voltage in the specified range?	0-10 mV	Go to *Step 10*	Go to *Step 11*
10	Replace Bank 2 HO2S 1. Is the action complete?	—	Verify repair	—
11	Replace the PCM. **IMPORTANT:** The replacement PCM must be programmed. Refer to *On-Vehicle Service* in *Powertrain Control Module and Sensors* for procedures. And also refer to latest Service Bulletin. Check to see if the Latest software is released or not. And then Down Load the LATEST PROGRAMMED SOFTWARE to the replacement PCM. Is the action complete?	—	Verify repair	—

Downloaded from www.Manualslib.com manuals search engine

Diagnostic Trouble Code (DTC) P0155 HO2S Heater Circuit Bank 2 Sensor 1

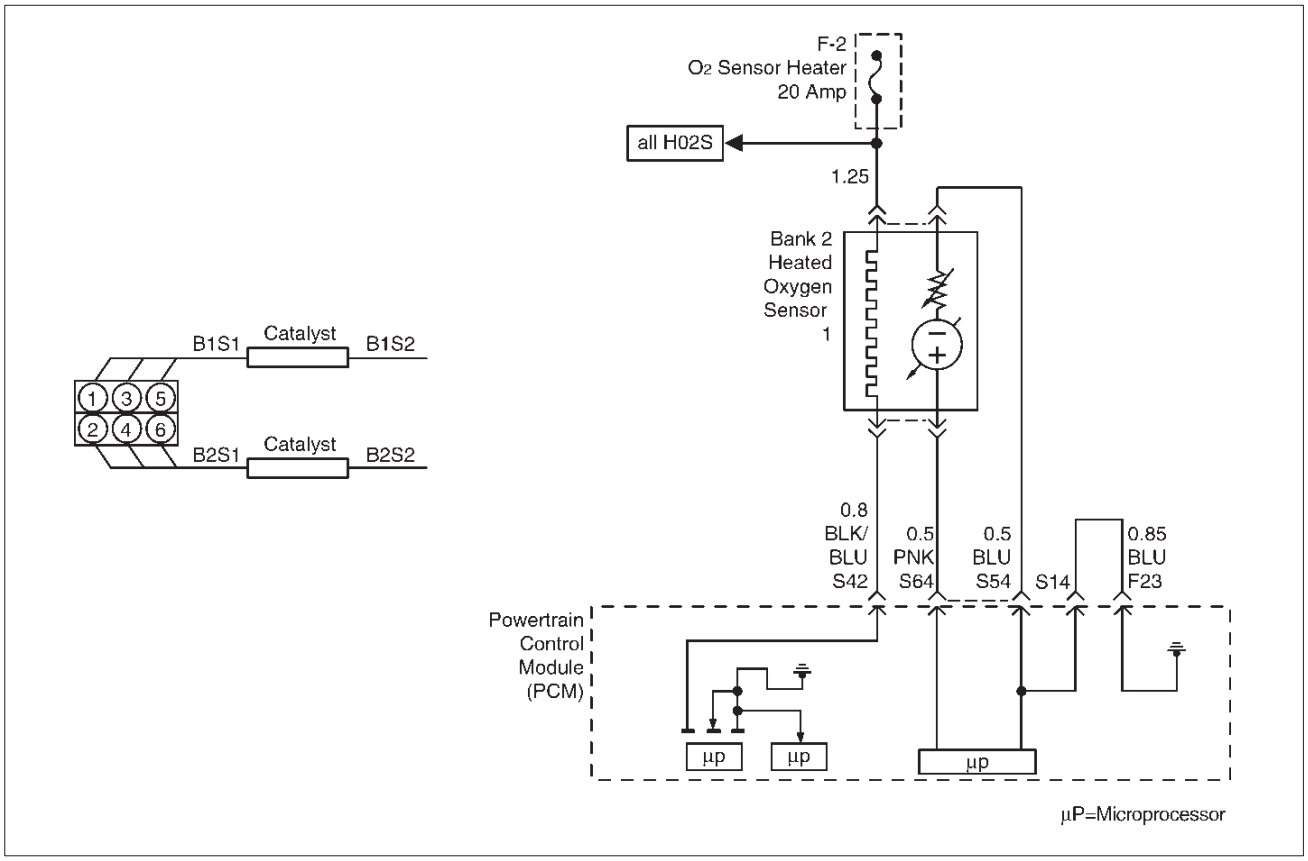

Circuit Description

Heated oxygen sensors are used to minimize the amount of time required for closed loop fuel control operation and to allow accurate catalyst monitoring. The oxygen sensor heater greatly decreases the amount of time required for fuel control sensors Bank 1 HO2S 1 and Bank 2 HO2S 1 to become active. Oxygen sensor heaters are required by post-catalyst monitor sensors to maintain a sufficiently high temperature which allows accurate exhaust oxygen content readings further from the engine.

The powertrain control module (PCM) will run the heater test only after a cold start (determined by engine coolant and intake air temperature at the time of start-up) and only once during an ignition cycle. When the engine is started the PCM will monitor the HO2S voltage. When the Bank HO2S voltage indicates a sufficiently active sensor, the PCM looks at how much time has elapsed since start-up. If the PCM determines that too much time was required for the Bank 2 HO2S 1 to become active, a DTC P0155 will set. The time it should take the HO2S to reach operating temperature is based on the total amount of air that has passed through the mass air flow (MAF) sensor and into the engine (more total air flow = shorter time to HO2S activity).

Conditions for Setting the DTC

- No related DTCs.
- Intake air temperature (IAT) is less than 32˚C (90˚F) at start-up.
- Engine coolant temperature (ECT) is less than 32˚C (90˚F) at start-up.
- IAT and ECT are within 6˚C (11˚F) of each other at start-up.
- Ignition voltage is between 11 volts and 18 volts.
- Average mass air flow for the sample period is less than 21 g/second.
- Bank 1 HO2S 2 voltage does not change more than 150 mV from the bias voltage (between 400 mV-500 mV) for a longer amount of time than it should. The maximum amount of time to come up to operating range is 120 seconds. This warm-up time depends on the engine coolant temperature at start-up and accumulated air flow since start-up.

Action Taken When the DTC Sets

- The PCM will illuminate the malfunction indicator lamp (MIL) after the second consecutive trip in which the fault is detected.
- The PCM will store conditions which were present when the DTC was set as Freeze Frame and in the Failure Records data.

Conditions for Clearing the MIL/DTC

- The PCM will turn the MIL “OFF” on the third consecutive trip cycle during which the diagnostic has been run and the fault condition is no longer present.
- A history DTC P0155 will clear after 40 consecutive warm-up cycles have occurred without a fault.

Downloaded from www.Manualslib.com manuals search engine

- DTC P0155 can be cleared by using the Tech 2 “Clear info” function or by disconnecting the PCM battery feed.

Diagnostic Aids

Check for the following conditions:

- Poor connection at PCM – Inspect harness connectors for backed-out terminals, improper mating, broken locks, improperly formed or damaged terminals, and poor terminal-to-wire connection.
- Damaged harness – Inspect the wiring harness for damage. If the harness appears to be OK, observe the display on the Tech 2 while moving connectors and wiring harnesses related to the sensor. A change in the display will indicate the location of the fault.

Reviewing the Failure Records vehicle mileage since the diagnostic test last failed may help determine how often the condition that caused the DTC to be set occurs. This may assist in diagnosing the condition.

Test Description

Number(s) below refer to the step number(s) on the Diagnostic Chart.

2. The HO2S should be allowed to cool before performing this test. If the HO2S heater is functioning, the signal voltage will gradually increase or decrease as the sensor element warms. If the heater is not functioning, the HO2S signal will remain near the 450 mV bias voltage.

4. Ensures that the ignition feed circuit to the HO2S is not open or shorted. The test light should be connected to a good chassis ground, in case the HO2S low or HO2S heater ground circuit is faulty.

5. Checks the HO2S heater ground circuit.

6. Checks for an open or shorted HO2S heater element.

10. An open HO2S signal or low circuit can cause the HO2S heater to appear faulty. Check these circuits before replacing the sensor.

DTC P0155 – HO2S Heater Circuit Bank 2 Sensor 1

Step	Action	Value(s)	Yes	No
1	Was the “On-Board Diagnostic (OBD) System Check” performed?	—	Go to *Step 2*	Go to *OBD System Check*
2	NOTE: If the engine has just been operating, allow the engine to cool for at least 15 minutes before proceeding. 1. Remove the fuel pump relay. 2. Connect a fused jumper at the fuel pump relay socket, between the battery positive at the relay and the relay wire that leads to the fuel pump and HO2S fuses. 3. Ignition “OFF.” 4. Install a Tech 2. 5. Ignition “ON,” engine “OFF.” 6. Monitor the Bank 1 HO2S 1 voltage for several minutes. Did the HO2S voltage go from bias voltage to above or below the specified value?	Above 650 mV or below 250 mV	Refer to *Diagnostic Aids*	Go to *Step 3*
3	Inspect the fuse for the Bank 2 HO2S 1 ignition feed. Is the fuse open?	—	Go to *Step 15*	Go to *Step 4*
4	1. Ignition “OFF.” 2. Raise the vehicle. 3. Disconnect the Bank 2 HO2S 1 electrical connector. 4. Using a test light connected to a known good ground (do not use Bank 2 HO2S 1 heater ground or Bank 2 HO2S 1 low), probe the ignition feed circuit at the Bank 2 HO2S 1 electrical connector (PCM harness side). Does the test light illuminate?	—	Go to *Step 5*	Go to *Step 7*

Downloaded from www.Manualslib.com manuals search engine

DTC P0155 – HO2S Heater Circuit Bank 2 Sensor 1 (Cont'd)

Step	Action	Value(s)	Yes	No
5	Connect the test light between Bank 2 HO2S 1 ignition feed and Bank 2 HO2S 1 heater ground. Does the test light illuminate?	—	Go to *Step 6*	Go to *Step 8*
6	1. Allow the HO2S to cool for at least 15 minutes. 2. Using a DVM, measure resistance between the Bank 2 HO2S 1 ignition feed and the Bank 2 HO2S 1 heater ground at the Bank 2 HO2S 1 pigtail. Is the HO2S resistance within the specified values?	3-6 ohms	Go to *Step 9*	Go to *Step 10*
7	Repair the open Bank 2 HO2S 1 ignition feed circuit to Bank 2 HO2S 1. Is the action complete?	—	Verify repair	—
8	Repair the open Bank 2 HO2S 1 heater ground circuit. Is the action complete?	—	Verify repair	—
9	1. Check for a poor connection at the Bank 2 HO2S 1 harness terminals. 2. If a poor connection is found, replace terminals. Was a poor connection found?	—	Verify repair	Go to *Step 10*
10	Check for a poor Bank 2 HO2S 1 signal or low circuit terminal connection at the Bank 2 HO2S 1 harness connector and replace terminal(s) if necessary. Did any terminals require replacement?	—	Verify repair	Go to *Step 11*
11	1. Ignition "OFF." 2. Disconnect the PCM and check the continuity of the Bank 2 HO2S 1 signal circuit and the Bank 2 HO2S 1 low circuit. 3. If the Bank 2 HO2S 1 signal circuit or HO2S low circuit measures over 5 ohms, repair open or poor connection as necessary. Was a problem found?	—	Verify repair	Go to *Step 12*
12	Check for a poor Bank 2 HO2S 1 low circuit terminal connection at the PCM and replace the terminal if necessary. Did the terminal require replacement?	—	Verify repair	Go to *Step 13*
13	Check for a poor Bank 2 HO2S 1 signal circuit terminal connection at the PCM and replace the terminal if necessary. Did the terminal require replacement?	—	Verify repair	Go to *Step 14*
14	Replace Bank 2 HO2S 1. Is the action complete?	—	Verify repair	—
15	Locate and repair short to ground in Bank 2 HO2S 1 ignition feed circuit and replace the faulty fuse. Is the action complete?	—	Verify repair	—

Downloaded from www.Manualslib.com manuals search engine

Diagnostic Trouble Code (DTC)
P0157 HO2S Circuit Low Voltage Bank 2 Sensor 2

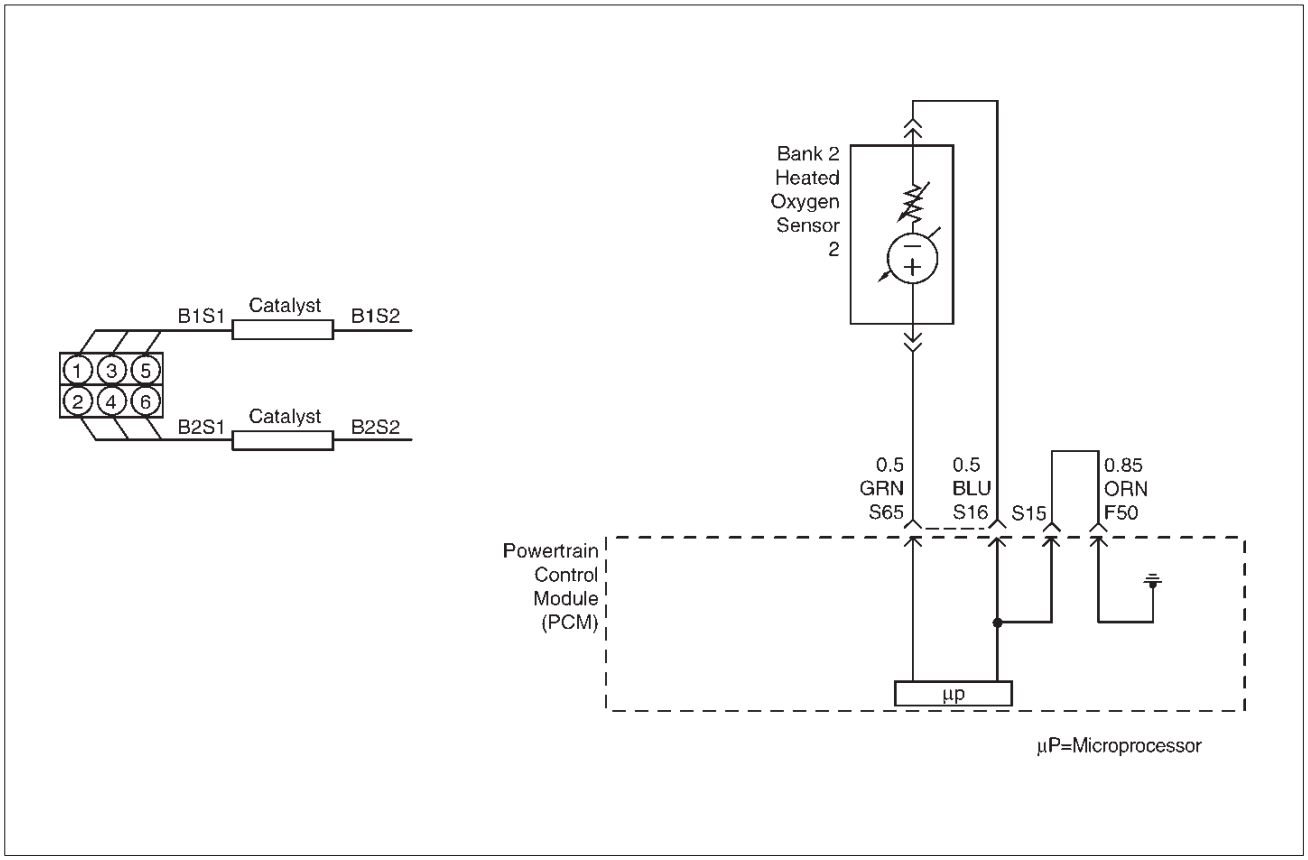

D06RY00176

Circuit Description

To control emissions of hydrocarbons (HC), carbon monoxide (CO), and oxides of nitrogen (NOx), a three-way catalytic converter is used. The catalyst within the converter promotes a chemical reaction which oxidizes the HC and CO present in the exhaust gas, converting them into harmless water vapor and carbon dioxide. The catalyst also reduces NOx, converting it to nitrogen. The powertrain control module (PCM) has the ability to monitor this process using the Bank 2 HO2S 1 and the Bank 2 HO2S 2 heated oxygen sensors. The Bank 2 HO2S 1 sensor produces an output signal which indicates the amount of oxygen present in the exhaust gas entering the three-way catalytic converter. The Bank 2 HO2S 2 sensor produces an output signal which indicates the oxygen storage capacity of the catalyst; this in turn indicates the catalyst's ability to convert exhaust gases efficiently. If the catalyst is operating efficiently, the Bank 2 HO2S 1 signal will be far more active than that produced by the Bank 2 HO2S 2 sensor. If the Bank 2 HO2S 2 signal voltage remains excessively low for an extended period of time, DTC P0157 will be set.

Conditions for Setting the DTC

- No related DTCs.
- The engine is operating in "closed loop."
- Engine coolant temperature is above 60˚C (140˚F).
- "Closed loop" commanded air/fuel ratio is between 14.5 and 14.8
- Bank 2 HO2S 2 signal voltage remains below 22 mV during normal "closed loop" operation for a total of 106 seconds over a 125-second period of time.

OR

- Bank 2 HO2S 2 signal voltage remains below 400 mV during "power enrichment" mode fuel control operation for up to 5 seconds.

Action Taken When the DTC Sets

- The PCM will illuminate the malfunction indicator lamp (MIL) the first time the fault is detected.
- The PCM will store conditions which were present when the DTC was set as Freeze Frame and in the Failure Records data.

Conditions for Clearing the MIL/DTC

- The PCM will turn the MIL "OFF" on the third consecutive trip cycle during which the diagnostic has been run and the fault condition is no longer present.
- A history DTC P0157 will clear after 40 consecutive warm-up cycles have occurred without a fault.
- DTC P0157 can be cleared by using the Tech 2 "Clear Info" function or by disconnecting the PCM battery feed.

Downloaded from www.Manualslib.com manuals search engine

Diagnostic Aids

Check for the following conditions:

- Heated oxygen sensor wiring – The sensor pigtail may be mispositioned and contacting the exhaust system.
- Poor PCM to engine grounds.
- Fuel pressure – A condition which causes a lean exhaust can cause DTC P0157 to set. The system will go lean if pressure is too low. The PCM can compensate for some decrease. However, if fuel pressure is too low, a DTC P0157 may be set. Refer to *Fuel System Diagnosis*.
- Lean injector(s) – Perform "Injector Balance Test."
- Vacuum leaks – Check for disconnected or damaged vacuum hoses and for vacuum leaks at the intake manifold, throttle body, EGR system, and PCV system.
- Exhaust leaks – An exhaust leak may cause outside air to be pulled into the exhaust gas stream past the HO2S, causing the DTC P0157 to set. Check for exhaust leaks near the Bank 1 HO2S 2 sensor.
- MAF sensor – The system can go lean if the MAF sensor signal indicates an engine airflow measurement that is not correct. Disconnect the MAF sensor to see if the condition is corrected. If so, replace the MAF sensor.
- Fuel contamination – Water, even in small amounts, can be delivered to the fuel injectors. The water can cause a lean exhaust to be indicated. Excessive alcohol in the fuel can also cause this condition. Refer to *Fuel System Diagnosis* for the procedure to check for fuel contamination.
- If none of above conditions are present, replace the affected HO2S 2.

Test Description

Number(s) below refer to the step number(s) on the Diagnostic Chart.

3. DTC P0157 failing during operation may indicate a condition described in the "Diagnostic Aids" above. If the DTC P0157 test passes while the Failure Records conditions are being duplicated, an intermittent condition is indicated.

DTC P0157 – HO2S Circuit Low Voltage Bank 2 Sensor 2

Step	Action	Value(s)	Yes	No
1	Was the "On-Board Diagnostic (OBD) System Check" performed?	—	Go to *Step 2*	Go to *OBD System Check*
2	1. Install the Tech 2. 2. Run the engine at operating temperature. 3. Operate the vehicle within the parameters specified under "Conditions for Setting the DTC" criteria included in Diagnostic Support. 4. Using a Tech 2, monitor Bank 2 HO2S 2 voltage. Does the Bank 2 HO2S 2 voltage remain below the specified value?	22 mV	Go to *Step 4*	Go to *Step 3*
3	1. Ignition "ON," engine "OFF." 2. Review and record Tech 2 Failure Records data and note parameters. 3. Operate the vehicle within Failure Records conditions as noted. 4. Using a Tech 2, monitor "DTC" info for DTC P0157 until the DTC P0157 test runs. 5. Note the test result. Does the Tech 2 indicate DTC P0157 failed this ignition?	—	Go to *Step 4*	Refer to *Diagnostic Aids*
4	1. Turn the ignition "OFF." 2. Disconnect the PCM. 3. Check the Bank 2 HO2S 2 high and low signal circuits for a short to ground or a short to the heater ground circuit. Were Bank 2 HO2S 2 signal circuits shorted?	—	Go to *Step 5*	Go to *Step 6*
5	Repair the Bank 1 HO2S 2 signal circuit. Is the action complete?	—	Verify repair	—

Downloaded from www.Manualslib.com manuals search engine

DTC P0157 – HO2S Circuit Low Voltage Bank 2 Sensor 2 (Cont'd)

Step	Action	Value(s)	Yes	No
6	1. Ignition "OFF." 2. Leave the PCM and HO2S 2 disconnected. 3. Check for continuity between the high and low signal circuits. Was there continuity between the high and low circuits?	—	Go to *Step 7*	Go to *Step 8*
7	Repair the short between the high and low circuits. Is the action complete?	—	Verify repair	—
8	1. Ignition "OFF." 2. Reconnect the PCM, leave HO2S 2 disconnected. 3. Ignition "ON." Does the Tech 2 indicate Bank 2 HO2S 2 voltage near the specified value?	425-475 mV	Refer to *Diagnostic Aids*	Go to *Step 9*
9	Replace the PCM. **IMPORTANT:** The replacement PCM must be programmed. Refer to *On-Vehicle Service* in *Powertrain Control Module and Sensors* for procedures. And also refer to the latest Service Bulletin. Check to see if the Latest software is released or not. And then Down Load the LATEST PROGRAMMED SOFTWARE to the replacement PCM. Is the action complete?	—	Verify repair	—

Downloaded from www.Manualslib.com manuals search engine

Diagnostic Trouble Code (DTC)
P0158 HO2S Circuit High Voltage Bank 2 Sensor 2

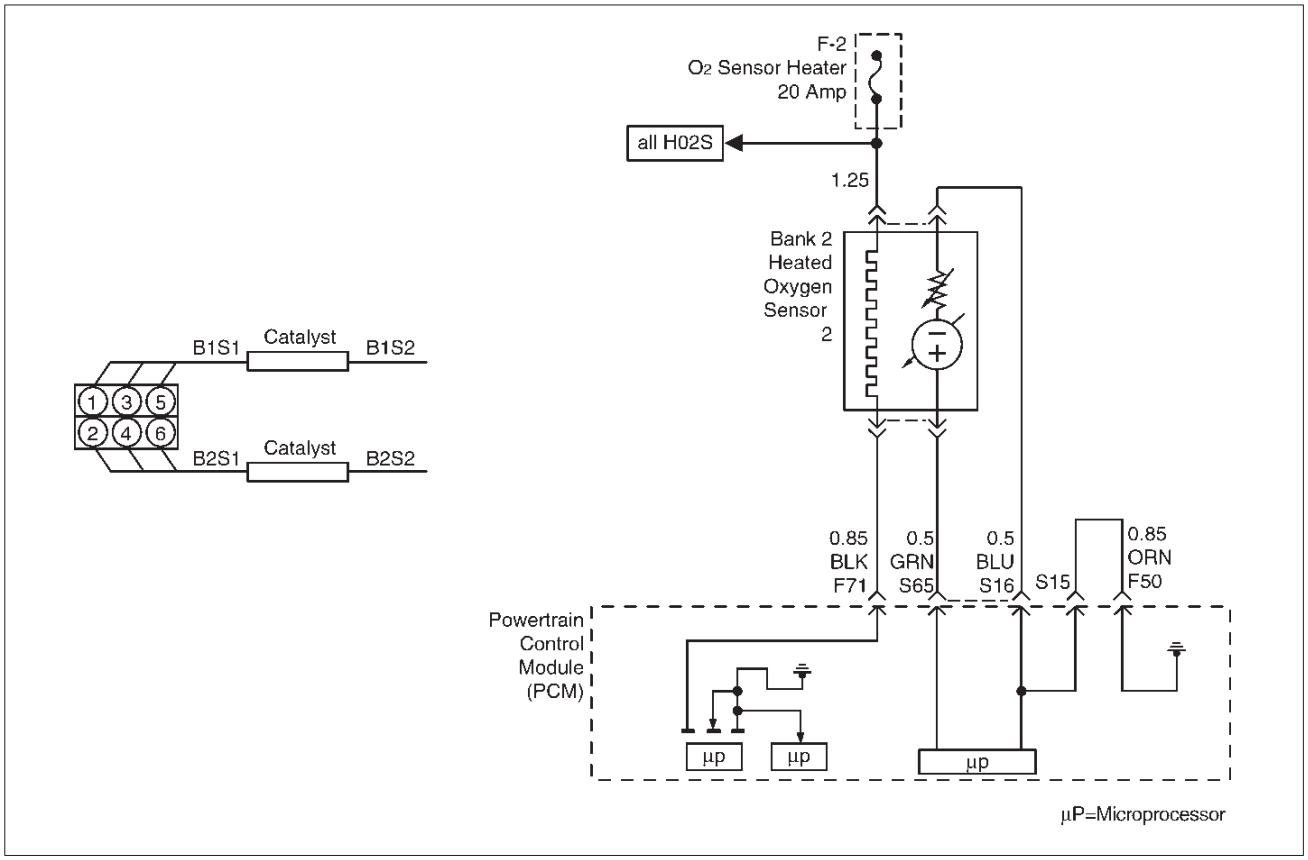

D06RY00177

Circuit Description

To control emissions of hydrocarbons (HC), carbon monoxide (CO), and oxides of nitrogen (NOx), a three-way catalytic converter is used. The catalyst within the converter promotes a chemical reaction which oxidizes the HC and CO present in the exhaust gas, converting them into harmless water vapor and carbon dioxide. The catalyst also reduces NOx, converting it to nitrogen. The powertrain control module (PCM) has the ability to monitor this process using the Bank 2 HO2S 1 and the Bank 2 HO2S 2 heated oxygen sensors. The Bank 2 HO2S 1 sensor produces an output signal which indicates the amount of oxygen present in the exhaust gas entering the three-way catalytic converter. The Bank 2 HO2S 2 sensor produces an output signal which indicates the oxygen storage capacity of the catalyst; this in turn indicates the catalyst's ability to convert exhaust gases efficiently. If the catalyst is operating efficiently, the Bank 2 HO2S 1 signal will be far more active than that produced by the Bank 2 HO2S 2 sensor. If the Bank 2 HO2S 2 signal voltage remains excessively high for an extended period of time, DTC P0158 will be set.

Conditions for Setting the DTC

- No related DTCs.
- Engine is operating in "closed loop."
- "Closed loop" commanded air/fuel ratio is between 14.5 and 14.8.
- Engine coolant temperature is above 60˚C (140˚F).
- Bank 2 HO2S 2 signal voltage remains above 952 mV during normal "closed loop" operation for a total of 106 seconds over a 125-second period.

OR

- Bank 2 HO2S 2 signal voltage remains above 500 mV during deceleration fuel cutoff mode operation for up to 3 seconds.

Action Taken When the DTC Sets

- The PCM will illuminate the malfunction indicator lamp (MIL) the first time the fault is detected.
- The PCM will store conditions which were present when the DTC was set as Freeze Frame and in the Failure Records data.

Conditions for Clearing the MIL/DTC

- The PCM will turn the MIL "OFF" on the third consecutive trip cycle during which the diagnostic has been run and the fault condition is no longer present.
- A history DTC P0158 will clear after 40 consecutive warm-up cycles have occurred without a fault.
- DTC P0158 can be cleared by using the Tech 2 "Clear Info" function or by disconnecting the PCM battery feed.

Downloaded from www.Manualslib.com manuals search engine

Diagnostic Aids

Check for the following conditions:

- Fuel pressure – An excessively rich fuel mixture can cause a DTC P0158 to be set. Refer to *Fuel System Diagnosis*.
- Rich injector(s) – Perform "Injector Balance Test."
- Leaking injector – Refer to *Fuel System Diagnosis*.
- Evaporative emissions (EVAP) canister purge – Check for fuel saturation. If full of fuel, check canister control and hoses. Refer to *Evaporative Emission (EVAP) Control System*.
- MAF sensor –The system can go rich if the MAF sensor signal indicates an engine airflow measurement that is not correct. Disconnect the MAF sensor to see if a rich condition is corrected. If so, replace the MAF sensor.
- Check for a leaking fuel pressure regulator diaphragm by checking the vacuum line to the regulator for the presence of fuel. There should be no fuel in the vacuum line.
- TP sensor – An intermittent TP sensor output will cause the system to go rich, due to a false indication of the engine accelerating.
- Shorted Heated Oxygen Sensor (HO2S) – If the HO2S is internally shorted, the HO2S voltage displayed on the Tech 2 will be over 1 volt. Try disconnecting the affected HO2S with the key "ON," engine "OFF." If the displayed HO2S voltage changes from over 1000 mV to around 450 mV, replace the HO2S. Silicon contamination of the HO2S can also cause a high HO2S voltage to be indicated. This condition is indicated by a powdery deposit on the portion of the HO2S exposed to the exhaust stream. If contamination is noticed, replace the affected HO2S.
- Open HO2S signal or low circuit, or faulty HO2S – A poor connection or open in the HO2S signal or low circuit can cause the DTC to set during deceleration fuel cutoff mode operation. An HO2S which is faulty and does not allow full voltage swing between the rich and lean thresholds can also cause this condition. Operate the vehicle while monitoring the HO2S voltage with a Tech 2. If the HO2S voltage is limited within a range between 300 mV to 600 mV, check the HO2S signal and low circuit wiring and associated terminal connections. If the wiring and connections are OK, replace the HO2S.
- If none of above conditions are present, replace the affected HO2S.

Test Description

Number(s) below refer to the step number(s) on the Diagnostic Chart.

3. DTC P0158 being set during deceleration fuel cutoff mode operation may indicate a condition described in the "Diagnostic Aids" above. If the DTC P0158 test passes while the Failure Records conditions are being duplicated, an intermittent condition is indicated.

Reviewing the Failure Records vehicle mileage since the diagnostic test last failed may help determine how often the condition that caused the DTC to be set occurs. This may assist in diagnosing the condition.

DTC P0158 – HO2S Circuit High Voltage Bank 2 Sensor 2

Step	Action	Value(s)	Yes	No
1	Was the "On-Board Diagnostic (OBD) System Check" performed?	—	Go to *Step 2*	Go to *OBD System Check*
2	1. Install the Tech 2. 2. Run the engine at operating temperature. 3. Operate the vehicle within parameters specified under "Conditions for Setting the DTC" criteria included in Diagnostic Support. 4. Using a Tech 2, monitor Bank 2 HO2S 2 voltage. Does the Bank 2 HO2S 2 voltage remain above the specified value?	952 mV (500 mV in deceleration fuel cut-out mode)	Go to *Step 4*	Go to *Step 3*
3	1. Ignition "ON." 2. Review and record Tech 2 Failure Records data. 3. Operate the vehicle within Failure Records conditions as noted. 4. Using a Tech 2, monitor "DTC" info for DTC P0158 until the DTC P0158 test runs. 5. Note the test result. Does the Tech 2 indicate DTC P0158 failed this ignition?	—	Go to *Step 4*	Refer to *Diagnostic Aids*

Downloaded from www.Manualslib.com manuals search engine

DTC P0158 – HO2S Circuit High Voltage Bank 2 Sensor 2 (Cont'd)

Step	Action	Value(s)	Yes	No
4	1. Ignition "OFF." 2. Disconnect Bank 2 HO2S 2. 3. Ignition "ON." 4. At the HO2S Bank 2 Sensor 2 connector (PCM side), use a DVM to measure voltages at the high and low signal terminals. Are the voltages in the specified range?	3-4 V	Go to *Step 5*	Go to *Step 6*
5	Repair short to voltage in signal circuit. Is the action complete?	—	Verify repair	—
6	1. Ignition "ON," engine "OFF." 2. At Bank 2 HO2S 2 connector (PCM side) jumper both the HO2S high and low signal circuits (PCM side) to ground. 3. Using a Tech 2, monitor Bank 2 HO2S 2 voltage. Is Bank 2 HO2S 2 voltage below the specified value?	10 mV	Go to *Step 7*	Go to *Step 8*
7	1. Disconnect the jumpers to ground from Bank 2 HO2S 2 PCM-side connector. 2. With the HO2S 2 connector disconnected, monitor Bank 2 HO2S 2 voltage. Is Bank 2 HO2S 2 voltage between the specified values?	425-475 mV	Refer to *Diagnostic Aids*	Go to *Step 8*
8	Replace the PCM. **IMPORTANT:** The replacement PCM must be programmed. Refer to *On-Vehicle Service* in *Powertrain Control Module and Sensors* for procedures. And also refer to the latest Service Bulletin. Check to see if the Latest software is released or not. And then Down Load the LATEST PROGRAMMED SOFTWARE to the replacement PCM. Is the action complete?	—	Verify repair	—

Downloaded from www.Manualslib.com manuals search engine

Diagnostic Trouble Code (DTC)
P0160 HO2S Circuit Insufficient Activity Bank 2 Sensor 2

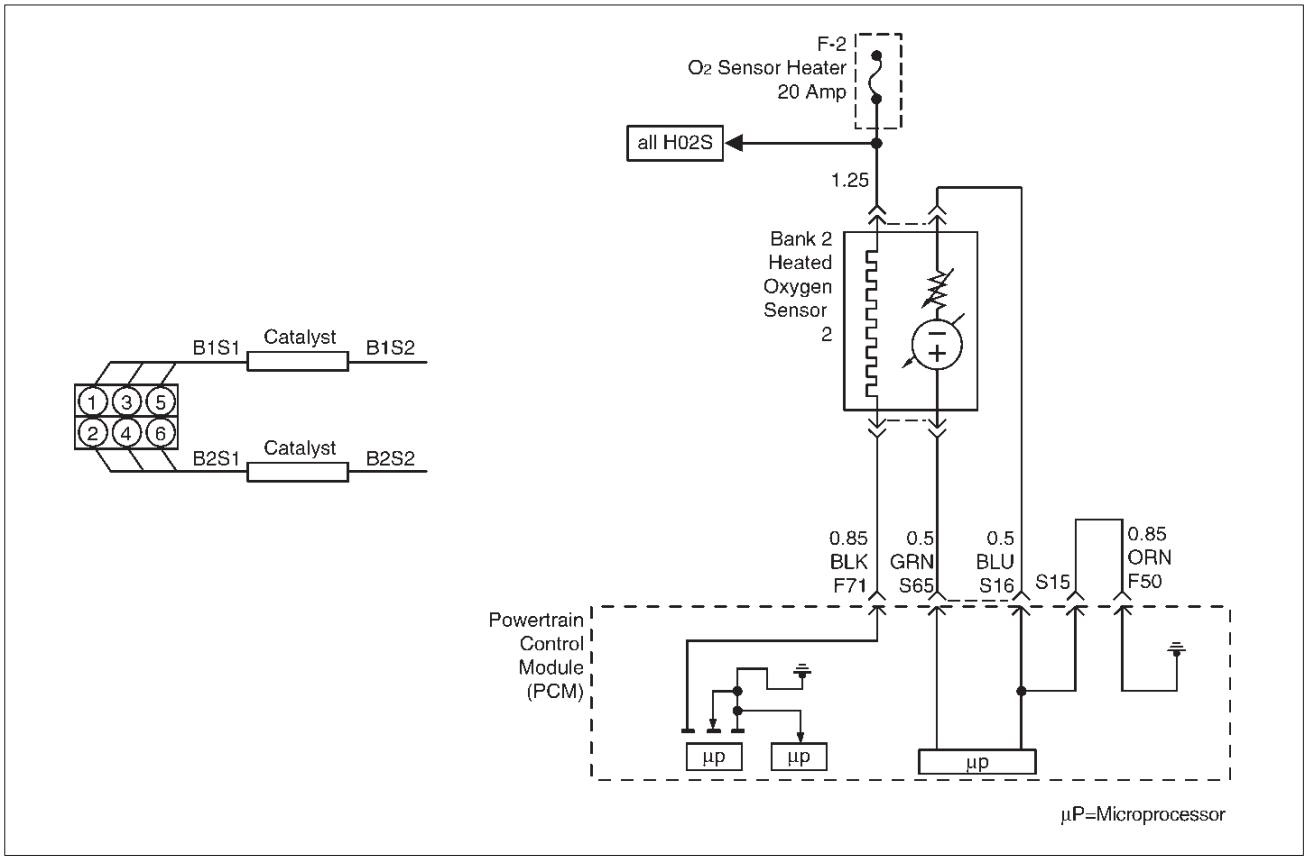

D06RY00177

Circuit Description

To control emissions of hydrocarbons (HC), carbon monoxide (CO), and oxides of nitrogen (NOx), a three-way catalytic converter is used. The catalyst within the converter promotes a chemical reaction which oxidizes the HC and CO present in the exhaust gas, converting them into harmless water vapor and carbon dioxide. The catalyst also reduces NOx, converting it to nitrogen. The powertrain control module (PCM) has the ability to monitor this process using the Bank 2 HO2S 1 and the Bank 2 HO2S 2 heated oxygen sensors. The Bank 2 HO2S 1 sensor produces an output signal which indicates the amount of oxygen present in the exhaust gas entering the three-way catalytic converter. The Bank 2 HO2S 2 sensor produces an output signal which indicates the oxygen storage capacity of the catalyst; this in turn indicates the catalyst's ability to convert exhaust gases efficiently. If the catalyst is operating efficiently, the Bank 2 HO2S 1 signal will be far more active than that produced by the Bank 2 HO2S 2 sensor. If the Bank 2 HO2S 2 signal voltage remains between 400 mV and 500 mV for an extended period of time, DTC P0160 will be set.

Heated Oxygen sensors are used to minimize the amount of time required for "closed loop" fuel control operation and allow accurate catalyst monitoring. The oxygen sensor heater greatly decreases the amount of time required for fuel control sensors Bank 1 HO2S 1 and Bank 2 HO2S 1 to become active. Oxygen sensor heaters are required by post-catalyst monitor sensors to maintain a sufficiently high temperature for accurate exhaust oxygen content readings further from the engine.

Conditions for Setting the DTC

- No related DTCs.
- Battery voltage is above 10 volts.
- Engine run time is longer than 40 seconds.
- Oxygen sensor heater is functioning properly.
- Engine is in "closed loop" operation.
- Bank 2 HO2S 2 signal voltage remains between 426 mV and 474 mV for a total of 106 seconds over a 125-second period of time.

Action Taken When the DTC Sets

- The PCM will illuminate the malfunction indicator lamp (MIL) the first time the fault is detected.
- The PCM will store conditions which were present when the DTC was set as Freeze Frame and in the Failure Records data.

Conditions for Clearing the MIL/DTC

- The PCM will turn the MIL "OFF" on the third consecutive trip cycle during which the diagnostic has been run and the fault condition is no longer present.
- A history DTC P0160 will clear after 40 consecutive warm-up cycles have occurred without a fault.

Downloaded from www.Manualslib.com manuals search engine

- DTC P0160 can be cleared by using the Tech 2 "Clear Info" function or by disconnecting the PCM battery feed.

Diagnostic Aids

Check for the following conditions:

- Poor connection or damaged harness – Inspect the harness connectors for backed-out terminals, improper mating, broken locks, improperly formed or damaged terminals, poor terminal-to-wire connection, and damaged harness.
- Faulty HO2S heater or heater circuit – With the ignition "ON," engine "OFF," the HO2S voltage displayed on a Tech 2 should gradually drop to below 250 mV. If not, disconnect the HO2S and connect a test light between the HO2S ignition feed and heater ground circuits. If the test light does not light, repair the open ignition feed or sensor ground circuit as necessary. If the test light lights and the HO2S signal and low circuits are OK, replace the HO2S.
- Intermittent test – With the ignition "ON," monitor the HO2S signal voltage while moving the wiring harness and related connectors. If the fault is induced, the HO2S signal voltage will change. This may help isolate the location of the malfunction.

Test Description

Number(s) below refer to the step number(s) on the Diagnostic Chart.

3. If the DTC P0160 test passes while the Failure Records conditions are being duplicated, an intermittent condition is indicated.

Reviewing the Failure Records vehicle mileage since the diagnostic test last failed may help determine how often the condition that caused the DTC to be set occurs. This may assist in diagnosing the condition.

DTC P0160 – HO2S Circuit Insufficient Activity Bank 2 Sensor 2

Step	Action	Value(s)	Yes	No
1	Was the "On-Board Diagnostic (OBD) System Check" performed?	—	Go to *Step 2*	Go to *OBD System Check*
2	1. Install the Tech 2. 2. Run the engine at operating temperature. 3. Operate the engine above 1200 RPM for two minutes. Does the Tech 2 indicate Bank 2 HO2S 2 voltage varying outside the specified values?	425-475 mV	Go to *Step 3*	Go to *Step 4*
3	1. Ignition "ON," engine "OFF," review and record Tech 2 Failure Records data and note parameters. 2. Operate the vehicle within Failure Records conditions as noted. 3. Using a Tech 2, monitor "DTC" info for DTC P0160 until the DTC P0160 test runs. 4. Note the test result. Does the Tech 2 indicate DTC P0160 failed this ignition?	—	Go to *Step 4*	Refer to *Diagnostic Aids*
4	Check for a damaged harness. Was problem found?	—	Verify repair	Go to *Step 5*
5	Check for poor Bank 2 HO2S 2 high and low circuit terminal connections at the Bank 2 HO2S 2 harness connector and replace terminal(s) if necessary. Did either terminal require replacement?	—	Verify repair	Go to *Step 6*
6	Check for poor Bank 2 HO2S 2 high and low circuit terminal connections at the PCM and replace terminals if necessary. Did any terminals require replacement?	—	Verify repair	Go to *Step 7*

Downloaded from www.Manualslib.com manuals search engine

DTC P0160 – HO2S Circuit Insufficient Activity Bank 2 Sensor 2 (Cont'd)

Step	Action	Value(s)	Yes	No
7	1. Ignition "OFF." 2. With the PCM disconnected, check continuity of the Bank 2 HO2S 2 high circuit. 3. If the Bank 2 HO2S 2 high circuit measures over 5.0 ohms, repair open or poor connections as necessary. Was a Bank 2 HO2S 2 high circuit problem found and corrected?	—	Verify repair	Go to *Step 8*
8	1. Ignition "OFF." 2. With the PCM disconnected, check continuity of the Bank 2 HO2S 2 low circuit. 3. If the Bank 2 HO2S 2 low circuit measures over 5 ohms, repair open or poor connections as necessary. Was a Bank 2 HO2S 2 low circuit problem found and corrected?	—	Verify repair	Go to *Step 9*
9	1. Ignition "ON," engine "OFF." 2. Disconnect Bank 2 HO2S 2 and jumper the HO2S high and low circuits (PCM side) to ground. 3. Using a Tech 2, monitor Bank 2 HO2S 2 voltage. Is Bank 2 HO2S 2 voltage in the specified range?	0-10 mV	Go to *Step 10*	Go to *Step 11*
10	Replace Bank 2 HO2S 2. Is the action complete?	—	Verify repair	—
11	Replace the PCM. **IMPORTANT:** The replacement PCM must be programmed. Refer to *On-Vehicle Service* in *Powertrain Control Module and Sensors* for procedures. And also refer to the latest Service Bulletin. Check to see if the Latest software is released or not. And then Down Load the LATEST PROGRAMMED SOFTWARE to the replacement PCM. Is the action complete?	—	Verify repair	—

Downloaded from www.Manualslib.com manuals search engine

Diagnostic Trouble Code (DTC) P0161 HO2S Heater Circuit Bank 2 Sensor 2

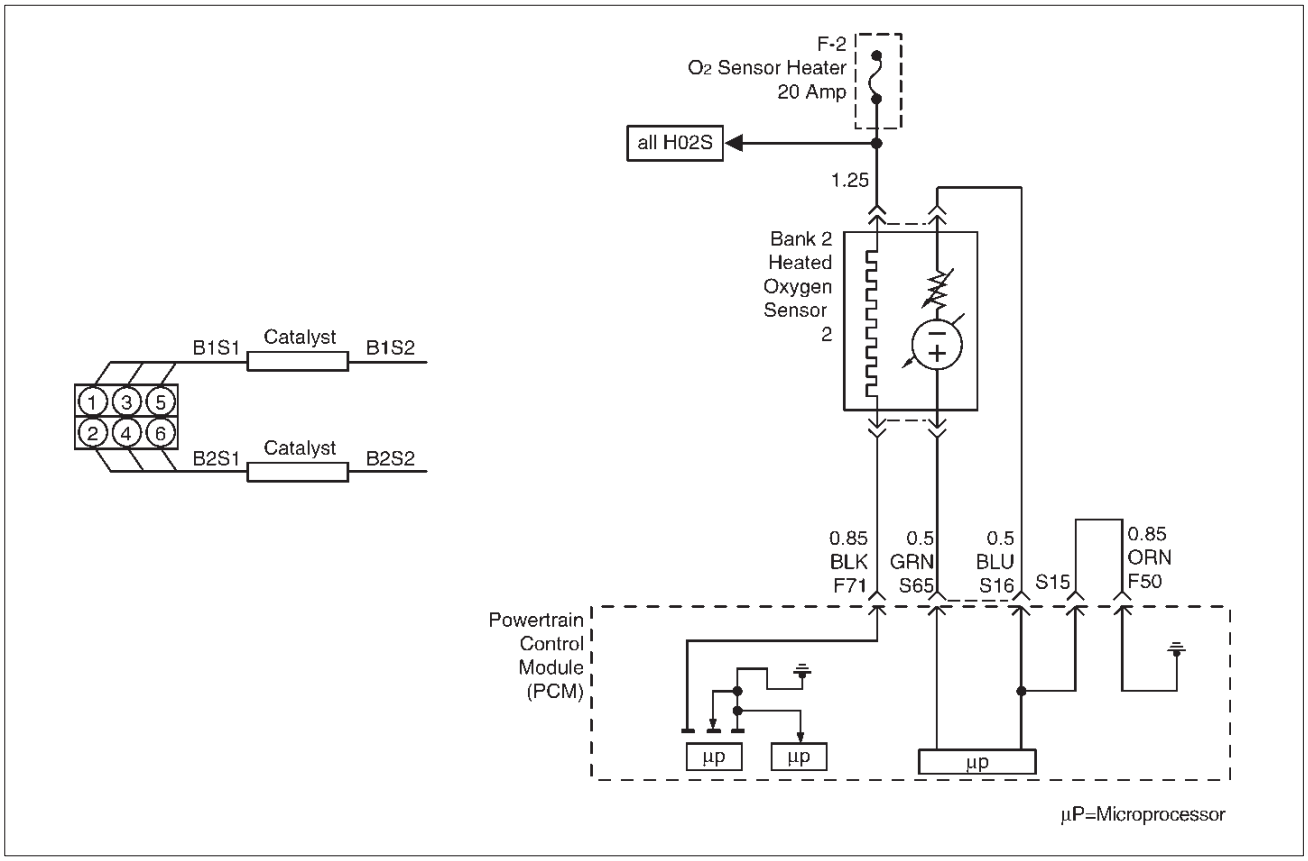

D06RY00177

Circuit Description

Heated oxygen sensors are used to minimize the amount of time required for “closed loop” fuel control operation and to allow accurate catalyst monitoring. The oxygen sensor heater greatly decreases the amount of time required for fuel control sensors Bank 1 HO2S 1 and Bank 2 HO2S 1 to become active. Oxygen sensor heaters are required by post-catalyst monitor sensors to maintain a sufficiently high temperature which allows accurate exhaust oxygen content readings further from the engine. The powertrain control module (PCM) will run the heater test only after a cold start (determined by engine coolant and intake air temperature at the time of start-up) and only once during an ignition cycle. When the engine is started, the PCM will monitor the HO2S voltage. When the Bank 2 HO2S 2 voltage indicates a sufficiently active sensor, the PCM looks at how much time has elapsed since start-up. If the PCM determines that too much time was required for the Bank 2 HO2S 2 to become active, a DTC P0161 will set. The time it should take the HO2S to reach operating temperature is based on the total amount of air that has passed through the MAF sensor and into the engine (more total air flow = shorter time to HO2S activity).

Conditions for Setting the DTC

- No related DTCs.
- Intake air temperature (IAT) is less than 32˚C (90˚F) at start-up.
- Engine coolant temperature (ECT) is less than 32˚C (90˚F) at start-up.
- IAT and ECT are within 6˚C (11˚F) of each other at start-up.
- Ignition voltage is between 11 volts and 18 volts.
- Average mass air flow for the sample period is less than 23 g/second.
- Bank 2 HO2S 2 voltage does not change more than 150 mV from the bias voltage (between 400 mV-500 mV) for a longer amount of time than it should. The maximum amount of time to come up to operating range is 120 seconds. This warm-up time depends on the engine coolant temperature at start-up and accumulated air flow since start-up.

Action Taken When the DTC Sets

- The PCM will illuminate the malfunction indicator lamp (MIL) after the second consecutive trip in which the fault is detected.
- The PCM will store conditions which were present when the DTC was set as Freeze Frame and in the Failure Records data.

Conditions for Clearing the MIL/DTC

- The PCM will turn the MIL “OFF” on the third consecutive trip cycle during which the diagnostic has been run and the fault condition is no longer present.
- A history DTC P0161 will clear after 40 consecutive warm-up cycles have occurred without a fault.

Downloaded from www.Manualslib.com manuals search engine

- DTC P0161 can be cleared by using the Tech 2 “Clear Info” function or by disconnecting the PCM battery feed.

Diagnostic Aids

Check for the following conditions:

- Poor connection at PCM – Inspect harness connectors for backed-out terminals, improper mating, broken locks, improperly formed or damaged terminals, and poor terminal-to-wire connection.
- Damaged harness – Inspect the wiring harness for damage. If the harness appears to be OK, observe the display on the Tech 2 while moving connectors and wiring harnesses related to the sensor. A change in the display will indicate the location of the fault.

Reviewing the Failure Records vehicle mileage since the diagnostic test last failed may help determine how often the condition that caused the DTC to be set occurs. This may assist in diagnosing the condition.

Test Description

Number(s) below refer to the step number(s) on the Diagnostic Chart.

2. The HO2S should be allowed to cool before performing this test. If the HO2S heater is functioning, the signal voltage will gradually increase or decrease as the sensor element warms. If the heater is not functioning, the HO2S signal will remain near the 450 mV bias voltage.
4. This ensures that the ignition feed circuit to the HO2S is not open or shorted. The test light should be connected to a good chassis ground, in case the HO2S low or HO2S heater ground circuit is faulty.
5. This checks the HO2S heater ground circuit.
6. This checks for an open or shorted HO2S heater element.
11. An open HO2S signal or low circuit can cause the HO2S heater to appear faulty. Check these circuits before replacing the sensor.

DTC P0161 – HO2S Heater Circuit Bank 2 Sensor 2

Step	Action	Value(s)	Yes	No
1	Was the “On-Board Diagnostic (OBD) System Check” performed?	—	Go to *Step 2*	Go to *OBD System Check*
2	NOTE: If the engine has just been operating, allow the engine to cool for at least 15 minutes before proceeding. 1. Remove the fuel pump relay. 2. Connect a fused jumper at the fuel pump relay socket, between the battery positive at the relay and the relay wire that leads to the fuel pump and HO2S fuses. 3. Ignition “OFF.” 4. Install a Tech 2. 5. Ignition “ON,” engine “OFF.” 6. Monitor the Bank 2 HO2S 2 voltage for several minutes. Did the HO2S voltage go from bias voltage to above or below the specified values?	Above 650 mV or Below 250 mV	Refer to *Diagnostic Aids*	Go to *Step 3*
3	Inspect the fuse for the Bank 2 HO2S 2 ignition feed. Is the fuse open?	—	Go to *Step 15*	Go to *Step 4*
4	1. Ignition “OFF.” 2. Raise the vehicle. 3. Disconnect the Bank 2 HO2S 2 electrical connector. 4. Using a test light connected to a known good ground (do not use Bank 2 HO2S 2 heater ground or Bank 2 HO2S 2 low), probe the ignition feed circuit at the Bank 2 HO2S 2 electrical connector (PCM harness side). Does the test light illuminate?	—	Go to *Step 5*	Go to *Step 7*
5	Connect the test light between the Bank 2 HO2S 2 ignition feed and the Bank 2 HO2S 2 heater ground. Does the test light illuminate?	—	Go to *Step 6*	Go to *Step 8*

Downloaded from www.Manualslib.com manuals search engine

DTC P0161 – HO2S Heater Circuit Bank 2 Sensor 2 (Cont'd)

Step	Action	Value(s)	Yes	No
6	1. Allow the HO2S to cool for at least 15 minutes. 2. Using a DVM, measure resistance between the Bank 2 HO2S 2 ignition feed and the Bank 2 HO2S 2 heater ground at the Bank 2 HO2S 2 pigtail. Is the HO2S resistance within the specified values?	3-6 ohms	Go to *Step 9*	Go to *Step 10*
7	Repair the open Bank 2 HO2S 2 ignition feed circuit to Bank 2 HO2S 2. Is the action complete?	—	Verify repair	—
8	Repair the open Bank 2 HO2S 2 heater ground circuit. Is the action complete?	—	Verify repair	—
9	1. Check for a poor connection at the Bank 2 HO2S 2 harness terminals. 2. If a poor connection is found, replace the terminals. Was a poor connection found?	—	Verify repair	Go to *Step 10*
10	1. Ignition "OFF." 2. Disconnect the PCM and check the continuity of the Bank 2 HO2S 2 signal circuit and the Bank 2 HO2S 2 low circuit. 3. If the Bank 2 HO2S 2 signal circuit or HO2S low circuit measures over 5 ohms, repair the open or poor connection as necessary. Was a problem found?	—	Verify repair	Go to *Step 11*
11	1. Ignition "OFF." 2. Disconnect the PCM and check the continuity of the Bank 2 HO2S 2 signal circuit and the Bank 2 HO2S 2 low circuit. 3. If the Bank 2 HO2S 2 signal circuit or HO2S low circuit measures over 5 ohms, repair the open or poor connection as necessary. Was a problem found?	—	Verify repair	Go to *Step 12*
12	Check for a poor Bank 2 HO2S 2 low circuit terminal connection at the PCM and replace the terminal if necessary. Did the terminal require replacement?	—	Verify repair	Go to *Step 13*
13	Check for a poor Bank 2 HO2S 2 high circuit terminal connection at the PCM and replace the terminal if necessary. Did the terminal require replacement?	—	Verify repair	Go to *Step 14*
14	Replace Bank 2 HO2S 2. Is the action complete?	—	Verify repair	—
15	Locate and repair the short to ground in the Bank 2 HO2S 2 ignition feed circuit and replace the faulty fuse. Is the action complete?	—	Verify repair	—

Downloaded from www.Manualslib.com manuals search engine

Diagnostic Trouble Code (DTC) P0171 Fuel Trim System Lean Bank 1

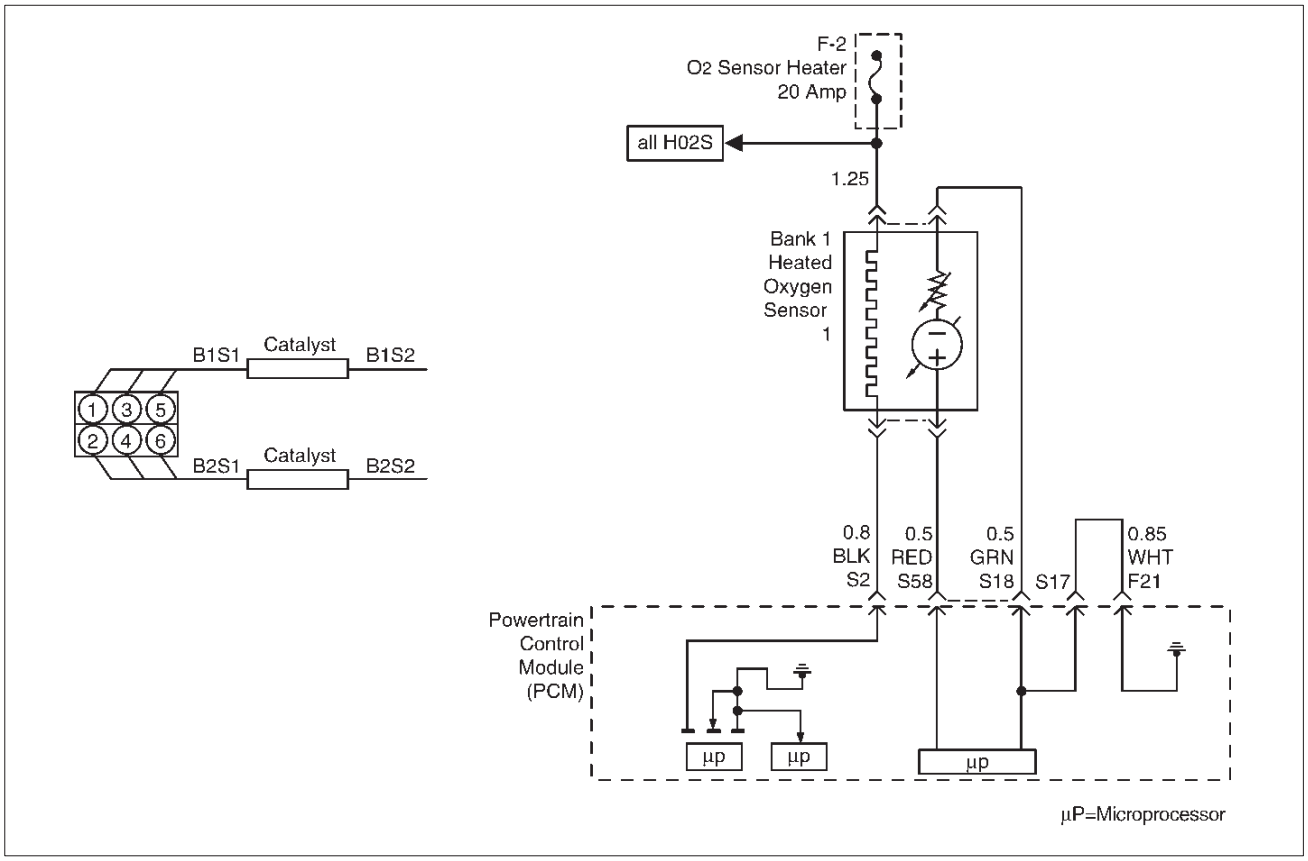

D06RY00171

Circuit Description

To provide the best possible combination of driveability, fuel economy, and emission control, a “closed loop” air/fuel metering system is used. While in “closed loop,” the powertrain control module (PCM) monitors the Bank 1 HO2S 1 and Bank 2 HO2S 1 signals and adjusts fuel delivery based upon the HO2S signal voltages. A change made to fuel delivery will be indicated by the long and short term fuel trim values which can be monitored with a Tech 2. Ideal fuel trim values are around 0%; if the HO2S signals are indicating a lean condition the PCM will add fuel, resulting in fuel trim values above 0%. If a rich condition is detected, the fuel trim values will be below 0%, indicating that the PCM is reducing the amount of fuel delivered. If an excessively lean condition is detected on Bank 1, the PCM will set DTC P0171.

The PCM’s maximum authority to control long term fuel trim allows a range between –15% (automatic transmission) or –12% (manual transmission) and +20%. The PCM monitors fuel trim under various engine speed/load fuel trim cells before determining the status of the fuel trim diagnostic.

Conditions for Setting the DTC

- No Tech 2 test is being run.
- None of the following: EGR DTCs, HO2S DTCs, (response, transition, open, low volts, no activity), MAF DTCs, TP sensor DTCs, MAP DTCs, IAT DTCs, canister purge DTCs, EVAP DTCs, injector circuit DTCs, or misfire DTCs.
- Engine coolant temperature is between 25˚C (77˚F) and 100˚C (212˚F).
- Intake air temperature is between –40˚C (–40˚F) and 120˚C (248˚F).
- Manifold absolute pressure is between 24 kPa and 99 kPa.
- Throttle angle is steady below 95%.
- Vehicle speed is below 136 km/h (85 mph).
- Engine speed is between 400 and 6,000 RPM.
- Barometric pressure is greater than 72.5 kPa.
- Mass air flow is between 2 g/second and 200 g/second.
- Ignition voltage is above 9.5 volts.
- Fuel system is in “closed loop.”
- Canister purge duty cycle is greater than 0% if on.

Action Taken When the DTC Sets

- The PCM will illuminate the malfunction indicator lamp (MIL) after the second consecutive trip in which the fault is detected.
- The PCM will store conditions which were present when the DTC was set as Freeze Frame and in the Failure Records data.

Conditions for Clearing the MIL/DTC

- The PCM will turn the MIL “OFF” on the third consecutive trip cycle during which the diagnostic has been run and the fault condition is no longer present.
- A history DTC P0171 will clear after 40 consecutive warm-up cycles have occurred without a fault.

Downloaded from www.Manualslib.com manuals search engine

- DTC P0171 can be cleared by using the Tech 2 “Clear Info” function or by disconnecting the PCM battery feed.

Diagnostic Aids

Check for the following conditions:

- Poor connection at PCM – Inspect harness connectors for backed-out terminals, improper mating, broken locks, improperly formed or damaged terminals, and poor terminal-to-wire connection.
- Damaged harness – Inspect the wiring harness for damage. If the harness appears to be OK, observe the Bank 1 HO2S 1 display on the Tech 2 while moving connectors and wiring harnesses related to the engine harness. A change in the display will indicate the location of the fault.

Reviewing the Failure Records vehicle mileage since the diagnostic test last failed may help determine how often the condition that caused the DTC to be set occurs. This may assist in diagnosing the condition.

Test Description

Number(s) below refer to the step number(s) on the Diagnostic Chart.

2. DTCs other than P0171 and P0174 may indicate a condition present which may cause a lean condition. If this is the case, repairing the condition which caused the other DTC will most likely correct the DTC P0171/P0174.

4. If the DTC P0171 test passes while the Failure Records conditions are being duplicated, the lean condition is intermittent. Refer to *Diagnostic Aids* or *Symptoms* for additional information on diagnosing intermittent problems.

Downloaded from www.Manualslib.com manuals search engine

DTC P0171 – Fuel Trim System Lean Bank 1

Step	Action	Value(s)	Yes	No
1	Was the "On-Board Diagnostic (OBD) System Check" performed?	—	Go to *Step 2*	Go to *OBD System Check*
2	Are any DTCs set other than P0171 and P0174?	—	Go to the applicable DTC charts and repair the other DTCs before proceeding with this chart	Go to *Step 3*
3	1. Start the engine and operate the vehicle in "closed loop." 2. Observe the "BANK 1 L.T. FUEL TRIM" display on the Tech 2. Is the displayed value greater than the specified value?	L.T. Fuel Trim: +20%	Go to *Step 5*	Go to *Step 4*
4	1. Review and record the Tech 2 Failure Records data. 2. Clear the DTC P0171/P0174 and operate the vehicle to duplicate the Failure Records conditions. 3. Monitor the Tech 2 "DTC" info for DTC P0171 while operating the vehicle to duplicate the Failure Records conditions. 4. Continue operating the vehicle until the DTC P0171 test runs and note the test result. Does the Tech 2 indicate DTC P0171 failed this ignition?	—	Go to *Step 5*	The lean condition is not present. If a driveability symptom still exists, refer to *Symptoms* section.
5	Was DTC P0174 also set?	—	Go to *Step 6*	Go to *Step 15*
6	Visually and physically inspect the vacuum hoses for disconnections, splits, kinks, improper routing and improper connections and repair any problem found. Did your inspection reveal a problem requiring repair?	—	Verify repair	Go to *Step 7*
7	Visually and physically inspect the crankcase ventilation valve for proper installation and repair any problem found (refer to *Crankcase Ventilation System*). Did your inspection reveal a problem requiring repair?	—	Verify repair	Go to *Step 8*
8	1. Inspect the MAF sensor inlet screen for damage or for the presence of foreign objects which may partially block the air flow sample through the MAF sensor. 2. Correct any problem that is found as necessary. Did your inspection of the MAF sensor reveal a condition requiring repair?	—	Verify repair	Go to *Step 9*
9	Start the engine and note the idle quality. Is a high or unsteady idle being experienced?	—	Go to *Step 10*	Go to *Step11*
10	1. Visually and physically inspect the throttle body, intake manifold, EGR valve and the EGR feed pipe for vacuum leaks. 2. Repair any vacuum leaks as necessary. Did your inspection reveal a vacuum leak?	—	Verify repair	Go to *Step 11*

Downloaded from www.Manualslib.com manuals search engine

DTC P0171 – Fuel Trim System Lean Bank 1 (Cont'd)

Step	Action	Value(s)	Yes	No
11	Check the fuel for excessive water, alcohol, or other contaminants (see *Diagnosis* in *Engine Fuel* for the procedure) and correct the contaminated fuel condition if present (see *Engine Fuel*). Was the fuel contaminated?	—	Verify repair	Go to *Step 12*
12	1. Visually and physically inspect the PCM injector grounds, power grounds and sensor grounds to ensure that they are clean, tight, and in their proper locations. 2. If a faulty ground condition is present, correct it as necessary. Did your inspection reveal a condition requiring repair?	—	Verify repair	Go to *Step 13*
13	1. Disconnect the MAF sensor electrical connector. 2. Operate the vehicle in "closed loop" while monitoring the "BANK 1 S.T. FUEL TRIM" displayed on the Tech 2. Does "BANK 1 S.T. FUEL TRIM" value decrease to near the specified value?	0%	Go to *Step 19*	Go to *Step 14*
14	Perform the procedure in the "Fuel System Pressure Test" and repair fuel system problem if necessary. Did Fuel System Pressure Test isolate a condition requiring repair?	—	Verify repair	Go to *Step 15*
15	1. Visually and physically inspect the intake manifold, injector O-rings, EGR adapter, EGR valve and the EGR feed pipes for vacuum leaks. 2. Repair any problem that is found. Did your inspection reveal a problem?	—	Verify repair	Go to *Step 16*
16	Visually and physically inspect the Bank 1 exhaust manifold for leaks and loose or missing hardware and correct any problem found. Did your inspection reveal a problem?	—	Verify repair	Go to *Step 17*
17	Perform the "Injector Balance Test," and correct any problem found (refer to *Fuel Metering System*). Did Injector Balance Test isolate a problem?	—	Verify repair	Go to *Step 18*
18	1. Visually and physically inspect the Bank 1 HO2S 1 to ensure that it is installed securely and that the Bank 1 HO2S 1 pigtail and wiring harness are not contacting the exhaust or otherwise damaged. 2. If a problem is found, correct it as necessary. Did your inspection reveal a problem?	—	Verify repair	Refer to *Diagnostic Aids*
19	Replace the MAF sensor. Is the action complete?	—	Verify repair	—

Downloaded from www.Manualslib.com manuals search engine

Diagnostic Trouble Code (DTC) P0172 Fuel Trim System Rich Bank 1

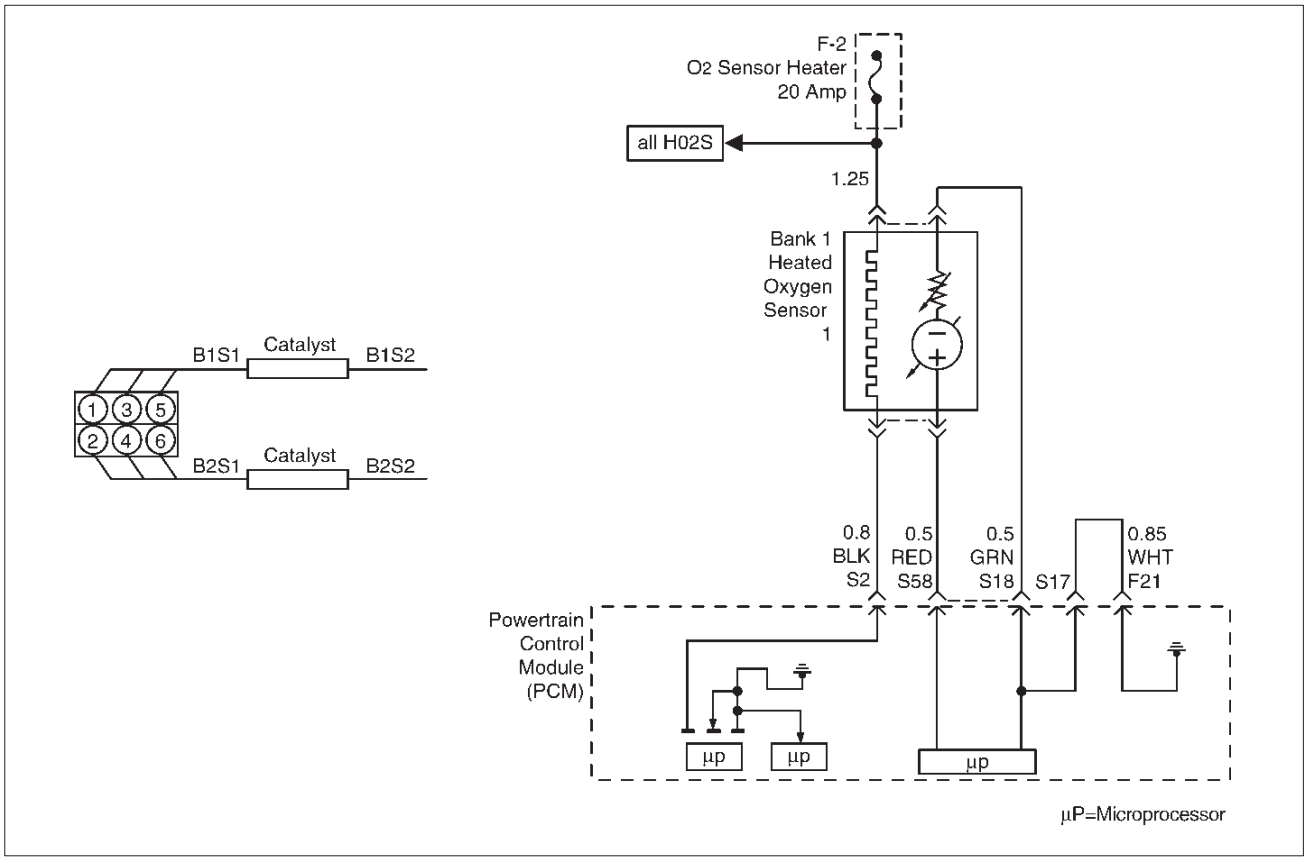

D06RY00171

Circuit Description

To provide the best possible combination of driveability, fuel economy, and emission control, a “closed loop” air/fuel metering system is used. While in “closed loop,” the powertrain control module (PCM) monitors the Bank 1 heated oxygen sensors (HO2S) 1 and Bank 2 HO2S 1 signals and adjusts fuel delivery based upon the HO2S signal voltages. A change made to fuel delivery will be indicated by the long and short term fuel trim values which can be monitored with a Tech 2. Ideal fuel trim values are around 0%; if the HO2S signals are indicating a lean condition the PCM will add fuel, resulting in fuel trim values above 0%. If a rich condition is detected, the fuel trim values will be below 0%, indicating that the PCM is reducing the amount of fuel delivered. If an excessively rich condition is detected on Bank 1, the PCM will set DTC P0172.

The PCM’s maximum authority to control long term fuel trim allows a range between –15% (automatic transmission) or –12 (manual transmission) and +20%. The PCM’s maximum authority to control short term fuel trim allows a range between –11% and +20%. The PCM monitors fuel trim under various engine speed/load fuel trim cells before determining the status of the fuel trim diagnostic.

Conditions for Setting the DTC

- No Tech 2 test is being run.
- None of the following was set: EGR DTCs, HO2S DTCs, (response, transition, open, low volts, no activity), MAF DTCs, TPS DTCs, MAP DTCs, IAT DTCs, canister purge DTCs, EVAP DTCs, injector circuit DTCs, or misfire DTCs.
- Engine coolant temperature is between 25˚C (77˚F) and 100˚C (212˚F).
- Intake air temperature is between –40˚C (–40˚F) and 120˚C (248˚F).
- Manifold absolute pressure is between 24 kPa and 99 kPa.
- Throttle angle is steady below 95%.
- Vehicle speed is below 136 km/h (85 mph).
- Engine speed is between 400 and 6,000 RPM.
- Barometric pressure is greater than 72.5 kPa.
- Mass air flow is between 2 g/second and 200 g/second.
- Ignition voltage is above 9.5 volts.
- Fuel system is in “closed loop.”
- Canister purge duty cycle is greater than 0%, if “ON.”

Action Taken When the DTC Sets

- The PCM will illuminate the malfunction indicator lamp (MIL) after the second consecutive trip in which the fault is detected.
- The PCM will store conditions which were present when the DTC was set as Freeze Frame and in the Failure Records data.

Downloaded from www.Manualslib.com manuals search engine

Conditions for Clearing the MIL/DTC

- The PCM will turn the MIL "OFF" on the third consecutive trip cycle during which the diagnostic has been run and the fault condition is no longer present.
- A history DTC P0172 will clear after 40 consecutive warm-up cycles have occurred without a fault.
- DTC P0172 can be cleared by using the Tech 2 "Clear Info" function or by disconnecting the PCM battery feed.

Diagnostic Aids

Check for the following conditions:

- Poor connection at PCM – Inspect harness connectors for backed-out terminals, improper mating, broken locks, improperly formed or damaged terminals, and poor terminal-to-wire connection.
- Damaged harness – Inspect the wiring harness for damage. If the harness appears to be OK, observe the Bank 1 HO2S 1 display on the Tech 2 while moving connectors and wiring harnesses related to the engine harness. A change in the display will indicate the location of the fault.

Reviewing the Failure Records vehicle mileage since the diagnostic test last failed may help determine how often the condition that caused the DTC to be set occurs. This may assist in diagnosing the condition.

Test Description

Number(s) below refer to the step number(s) on the Diagnostic Chart.

2. DTCs other than P0172 and P0175 may indicate a condition present which may cause a lean condition. If this is the case, repairing the condition which caused the other DTC will most likely correct the DTC P0172/P0175.

4. If the DTC P0172 test passes while the Failure Records conditions are being duplicated, the rich condition is intermittent. Refer to *Diagnostic Aids* or *Symptoms* for additional information on diagnosing intermittent problems.

DTC P0172 – Fuel Trim System Rich Bank 1

Step	Action	Value(s)	Yes	No
1	Was the "On-Board Diagnostic (OBD) System Check" performed?	—	Go to *Step 2*	Go to *OBD System Check*
2	Are any DTCs set other than P0172 and P0175?	—	Go to the applicable DTC charts and repair the other DTCs before proceeding with this chart	Go to *Step 3*
3	1. Start the engine and operate the vehicle in "closed loop." 2. Observe "B1 Long Term Fuel Trim" display on the Tech 2. Is the displayed value more negative than the specified value?	L.T. Fuel Trim: –15% (auto. trans.) OR –12% (man. trans.)	Go to *Step 5*	Go to *Step 4*
4	1. Review and record the Tech 2 Failure Records data. 2. Clear the DTC P0172/P0175 and operate the vehicle to duplicate the Failure Records conditions. 3. Monitor the Tech 2 "DTC" info for DTC P0172 while operating the vehicle to duplicate the Failure Records conditions. 4. Continue operating the vehicle until the DTC P0172 test runs and note test result. Does the Tech 2 indicate DTC P0172 failed this ignition?	—	Go to *Step 5*	The rich condition is not present. If a driveability symptom still exists, refer to *Symptoms*.
5	Is DTC P0175 also set?	—	Go to *Step 6*	Go to *Step 15*
6	Visually and physically inspect the air filter element and replace it if necessary. Did the air filter require replacement?	—	Verify repair	Go to *Step 7*

Downloaded from www.Manualslib.com manuals search engine

DTC P0172 – Fuel Trim System Rich Bank 1 (Cont'd)

Step	Action	Value(s)	Yes	No
7	Visually and physically inspect the air intake duct for collapse or restriction and repair if necessary. Did your inspection reveal a condition requiring repair?	—	Verify repair	Go to *Step 8*
8	Inspect the MAF sensor inlet screen for damage or for the presence of foreign objects which may partially block air flow through the screen and correct any problem found. Did your inspection of the MAF sensor reveal a condition requiring repair or replacement?	—	Verify repair	Go to *Step 9*
9	Start the engine and note the idle quality. Is a low or unsteady idle being experienced?	—	Go to *Step 10*	Go to *Step 11*
10	1. Ignition "OFF." 2. Physically inspect the throttle body bore and throttle plate for coking and foreign objects. 3. If a problem was found, repair as necessary. Did your inspection reveal a condition requiring repair?	—	Verify repair	Go to *Step 11*
11	1. Disconnect the vacuum hose from the fuel pressure regulator and inspect the hose for the presence of fuel. 2. If fuel is present in the vacuum hose, replace the fuel pressure regulator (refer to *Fuel Metering System*). Did the fuel pressure regulator require replacement?	—	Verify repair	Go to *Step 12*
12	Ignition "ON," engine "OFF," monitor the TP1 Angle display on the Tech 2 while slowly depressing the accelerator pedal. Does the TP1 Angle display increase steadily and evenly from minimum value at closed throttle to maximum value at wide-open throttle?	Minimum 8% Maximum 92%	Go to *Step 13*	Go to *Step 21*
13	1. Disconnect the MAF sensor electrical connector. 2. Operate the vehicle in "closed loop" while monitoring the "BANK 1 L.T. FUEL TRIM" and "BANK 1 S. T. FUEL TRIM" display on the Tech 2. Did both values change to near the specified value?	0%	Go to *Step 22*	Go to *Step 14*
14	1. Perform "Fuel System Pressure Test." 2. If Fuel System Pressure Test isolates a problem, repair as necessary (refer to *Engine Fuel* or *Fuel Metering System*). Did the Fuel System Pressure Test isolate a problem requiring repair?	—	Verify repair	Go to *Step 15*
15	1. Ignition "ON," engine "OFF." 2. Connect a test light between the harness connector terminals of canister purge solenoid. Is the test light on?	—	Go to *Step 16*	Go to *Step 19*
16	Check for short to ground in the wire (red/yel) between the canister purge solenoid and PCM terminal S7. Was there a short to ground?	—	Go to *Step 17*	Go to *Step 18*
17	Repair the short to ground. Is the action complete?	—	Verify repair	—

Downloaded from www.Manualslib.com manuals search engine

DTC P0172 – Fuel Trim System Rich Bank 1 (Cont'd)

Step	Action	Value(s)	Yes	No
18	Replace the PCM. **IMPORTANT:** The replacement PCM must be programmed. Refer to *On-Vehicle Service* in *Powertrain Control Module and Sensors* for procedures. And also refer to the latest Service Bulletin. Check to see if the Latest software is released or not. And then Down Load the LATEST PROGRAMMED SOFTWARE to the replacement PCM. Is the action complete?	—	Verify repair	—
19	1. Perform the "Injector Balance Test." 2. If Injector Balance Test isolates a problem, repair as necessary (refer to *Fuel Metering System*). Did the Injector Balance Test isolate a problem requiring repair?	—	Verify repair	Go to *Step 20*
20	1. Remove and visually/physically inspect the Bank 1 HO2S 1 for silicon contamination. This will be indicated by a powdery deposit on the portion of the HO2S that is exposed to the exhaust stream. 2. If contamination is evident on the Bank 1 HO2S 1, replace the contaminated sensors. Did the sensor require replacement?	—	Verify repair	Refer to *Diagnostic Aids*
21	1. Check the TP sensor mounting screws and tighten or replace them as necessary if they are loose or missing. 2. If the screws are OK, replace the TP sensor. Is the action complete?	—	Verify repair	—
22	Replace the MAF sensor. Is the action complete?	—	Verify repair	—

Downloaded from www.Manualslib.com manuals search engine

Diagnostic Trouble Code (DTC) P0174 Fuel Trim System Lean Bank 2

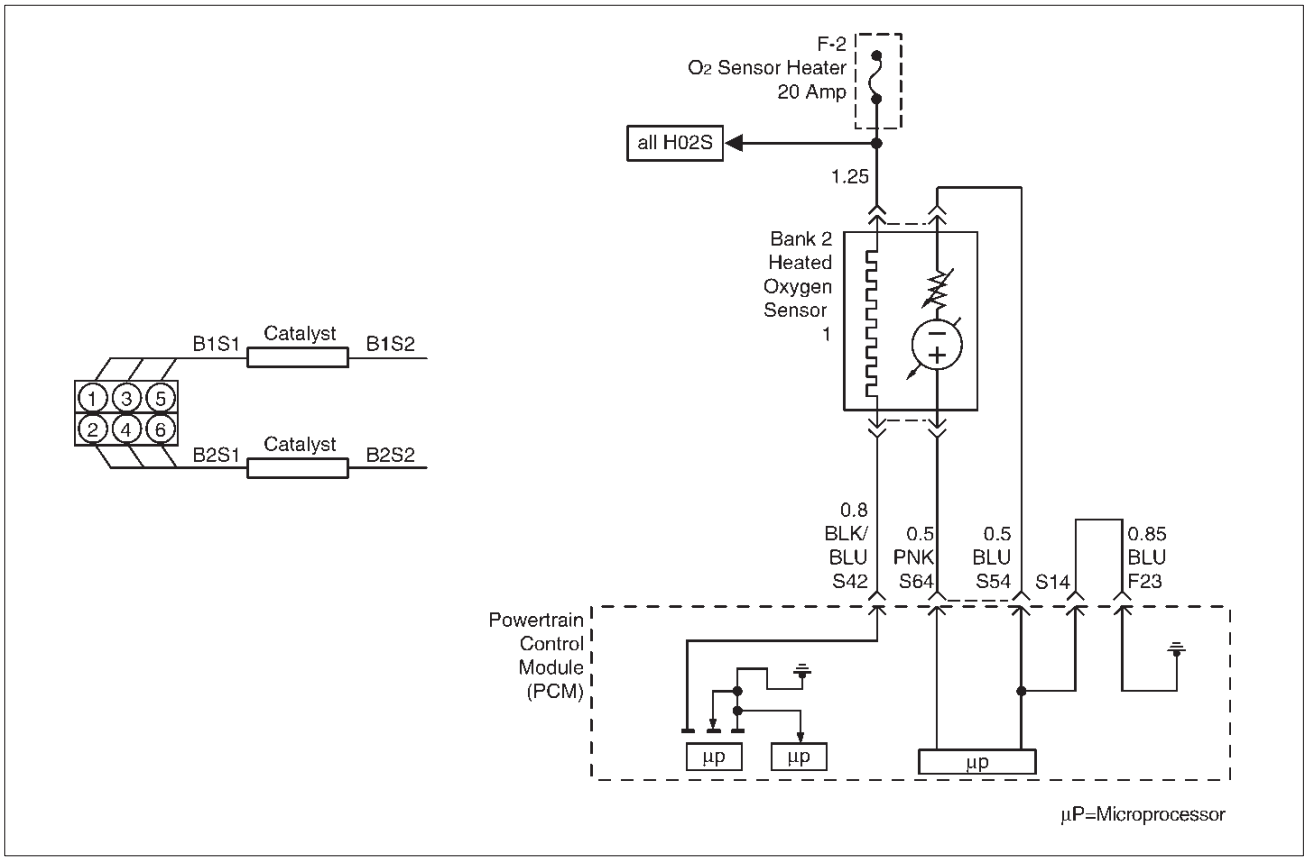

D06RY00175

Circuit Description

To provide the best possible combination of driveability, fuel economy, and emission control, a “closed loop” air/fuel metering system is used. While in “closed loop,” the powertrain control module (PCM) monitors the Bank 1 HO2S 1 and Bank 2 HO2S 1 signals and adjusts fuel delivery based upon the HO2S signal voltages. A change made to fuel delivery will be indicated by the long and short term fuel trim values which can be monitored with a Tech 2. Ideal fuel trim values are around 0%; if the HO2S signals are indicating a lean condition the PCM will add fuel, resulting in fuel trim values above 0%. If a rich condition is detected, the fuel trim values will be below 0%, indicating that the PCM is reducing the amount of fuel delivered. If an excessively lean condition is detected on Bank 2, the PCM will set DTC P0174.

The PCM’s maximum authority to control long term fuel trim allows a range between –15%(automatic transmission) or –12%(manual transmission) and +20%. The PCM monitors fuel trim under various engine speed/load fuel trim cells before determining the status of the fuel trim diagnostic.

Conditions for Setting the DTC

- No Tech 2 test is being run.
- None of the following DTCs are set: idle system, EGR, HO2S, (response, transition, open, low volts, no activity), MAF, TP sensor, MAP, IAT, canister purge, EVAP, injector circuit, or misfire.
- Engine coolant temperature is between 25˚C (77˚F) and 100˚C (212˚F).
- Intake air temperature is between –40˚C (–40˚F) and 120˚C (248˚F).
- Manifold absolute pressure is between 24 kPa and 99 kPa.
- Throttle angle is steady between 3 and 95%.
- Vehicle speed is below 136 km/h (85 mph).
- Engine speed is between 400 and 6,000 RPM.
- Barometric pressure is greater than 72.5 kPa.
- Mass air flow is between 2 g/second and 200 g/second.
- Ignition voltage is above 9.5 volts.
- Fuel system is in “closed loop.”
- Canister purge duty cycle is greater than 0%, if “ON.”

Action Taken When the DTC Sets

- The PCM will illuminate the malfunction indicator lamp (MIL) after the second consecutive trip in which the failure is detected.
- The PCM will store conditions which were present when the DTC was set as Freeze Frame and in the Failure Records data.

Conditions for Clearing the MIL/DTC

- The PCM will turn the MIL “OFF” on the third consecutive trip cycle during which the diagnostic has been run and the fault condition is no longer present.
- A history DTC P0174 will clear after 40 consecutive warm-up cycles have occurred without a fault.

Downloaded from www.Manualslib.com manuals search engine

- DTC P0174 can be cleared by using the Tech 2 “Clear Info” function or by disconnecting the PCM battery feed.

Diagnostic Aids

Check for the following conditions:

- Poor connection at PCM – Inspect harness connectors for backed-out terminals, improper mating, broken locks, improperly formed or damaged terminals, and poor terminal-to-wire connection.
- Damaged harness – Inspect the wiring harness for damage. If the harness appears to be OK, observe the Bank 2 HO2S 1 display on the Tech 2 while moving connectors and wiring harnesses related to the engine harness. A change in the display will indicate the location of the fault.

Reviewing the Failure Records vehicle mileage since the diagnostic test last failed may help determine how often the condition that caused the DTC to be set occurs. This may assist in diagnosing the condition.

Test Description

Number(s) below refer to the step number(s) on the Diagnostic Chart.

2. DTCs other than P0171 and P0174 may indicate a condition present which may cause a lean condition. If this is the case, repairing the condition which caused the other DTC will most likely correct the DTC P0171/P0174.

4. If the DTC P0174 test passes while the Failure Records conditions are being duplicated, the lean condition is intermittent. Refer to *Diagnostic Aids* or *Symptoms* for additional information on diagnosing intermittent problems.

Downloaded from www.Manualslib.com manuals search engine

DTC P0174 – Fuel Trim System Lean Bank 2

Step	Action	Value(s)	Yes	No
1	Was the “On-Board Diagnostic (OBD) System Check” performed?	—	Go to *Step 2*	Go to *OBD System Check*
2	Are any DTCs set other than P0174 and P0171?	—	Go to the applicable DTC charts and repair the other DTCs before proceeding with this chart.	Go to *Step 3*
3	1. Start the engine and operate the vehicle in “closed loop.” 2. Observe the “BANK 2 L.T. FUEL TRIM” display on the Tech 2. Is the displayed values greater than the specified values?	L.T. Fuel Trim: +20%	Go to *Step 5*	Go to *Step 4*
4	1. Review and record Tech 2 Failure Records data. 2. Clear the DTC P0171/P0174 and operate the vehicle to duplicate the Failure Records conditions. 3. Monitor the Tech 2 “DTC” info for DTC P0174 while operating the vehicle to duplicate the Failure Records conditions. 4. Continue operating the vehicle until the DTC P0174 test runs. 5. Note the test result. Does the Tech 2 indicate DTC P0174 failed this ignition?	—	Go to *Step 5*	The lean condition is not present. If a driveability symptom still exists, refer to *Symptoms* section.
5	Was DTC P0171 also set?	—	Go to *Step 6*	Go to *Step 15*
6	Visually and physically inspect the vacuum hoses for disconnections, splits, kinks, improper routing and improper connections and repair any problem found. Did your inspection reveal a problem requiring repair?	—	Verify repair	Go to *Step 7*
7	Visually and physically inspect the crankcase ventilation valve for proper installation and repair any problem found (refer to *Crankcase Ventilation System*). Did your inspection reveal a problem requiring repair?	—	Verify repair	Go to *Step 8*
8	1. Inspect the MAF sensor inlet screen for damage or for the presence of foreign objects which may partially block the air flow sample through the MAF sensor. 2. Correct any problem that is found as necessary. Did your inspection of the MAF sensor reveal a condition requiring repair?	—	Verify repair	Go to *Step 9*
9	Start the engine and note the idle quality. Is a high or unsteady idle being experienced?	—	Go to *Step 10*	Go to *Step 11*

Downloaded from www.Manualslib.com manuals search engine

DTC P0174 – Fuel Trim System Lean Bank 2 (Cont'd)

Step	Action	Value(s)	Yes	No
10	1. Visually and physically inspect the throttle body, intake manifold, EGR valve and the EGR feed pipe for vacuum leaks. 2. Repair any vacuum leaks as necessary. Did your inspection reveal a vacuum leak?	—	Verify repair	Go to *Step 11*
11	Check the fuel for excessive water, alcohol, or other contaminants (see *Diagnosis* in *Engine Fuel* for procedure) and correct the contaminated fuel condition is present (see *Engine Fuel*). Was the fuel contaminated?	—	Verify repair	Go to *Step 12*
12	1. Visually and physically inspect the PCM injector grounds, power grounds and sensor grounds to ensure that they are clean, tight, and in their proper locations. 2. If a faulty ground condition is present, correct it as necessary. Did your inspection reveal a condition requiring repair?	—	Verify repair	Go to *Step 13*
13	1. Disconnect the MAF sensor electrical connector. 2. Operate the vehicle in "closed loop" while monitoring the "BANK 2 S.T. FUEL TRIM" displayed on the Tech 2. Does the "BANK 2 S.T. FUEL TRIM" value decrease to near the specified value?	0%	Go to *Step 19*	Go to *Step 14*
14	Perform the procedure in the "Fuel System Pressure Test" and repair fuel system problem if necessary. Did the Fuel System Pressure Test isolate a condition requiring repair?	—	Verify repair	Go to *Step 15*
15	1. Visually and physically inspect the intake manifold, injector O-rings, EGR adapter, EGR valve and the EGR feed pipes for vacuum leaks. 2. Repair any problem that is found. Did your inspection reveal a problem?	—	Verify repair	Go to *Step 16*
16	Visually and physically inspect the Bank 2 exhaust manifold for leaks and loose or missing hardware and correct any problem found. Did your inspection reveal a problem?	—	Verify repair	Go to *Step 17*
17	Perform the "Injector Balance Test," and correct any problem found (refer to *Fuel Metering System*). Did the Injector Balance Test isolate a problem?	—	Verify repair	Go to *Step 18*
18	1. Visually and physically inspect the Bank 2 HO2S 1 to ensure that it is installed securely and that the Bank 2 HO2S 1 pigtail and wiring harness are not contacting the exhaust or otherwise damaged. 2. If a problem is found, correct it as necessary. Did your inspection reveal a problem?	—	Verify repair	Refer to *Diagnostic Aids*
19	Replace the MAF sensor. Is the action complete?	—	Verify repair	—

Downloaded from www.Manualslib.com manuals search engine

Diagnostic Trouble Code (DTC) P0175 Fuel Trim System Rich Bank 2

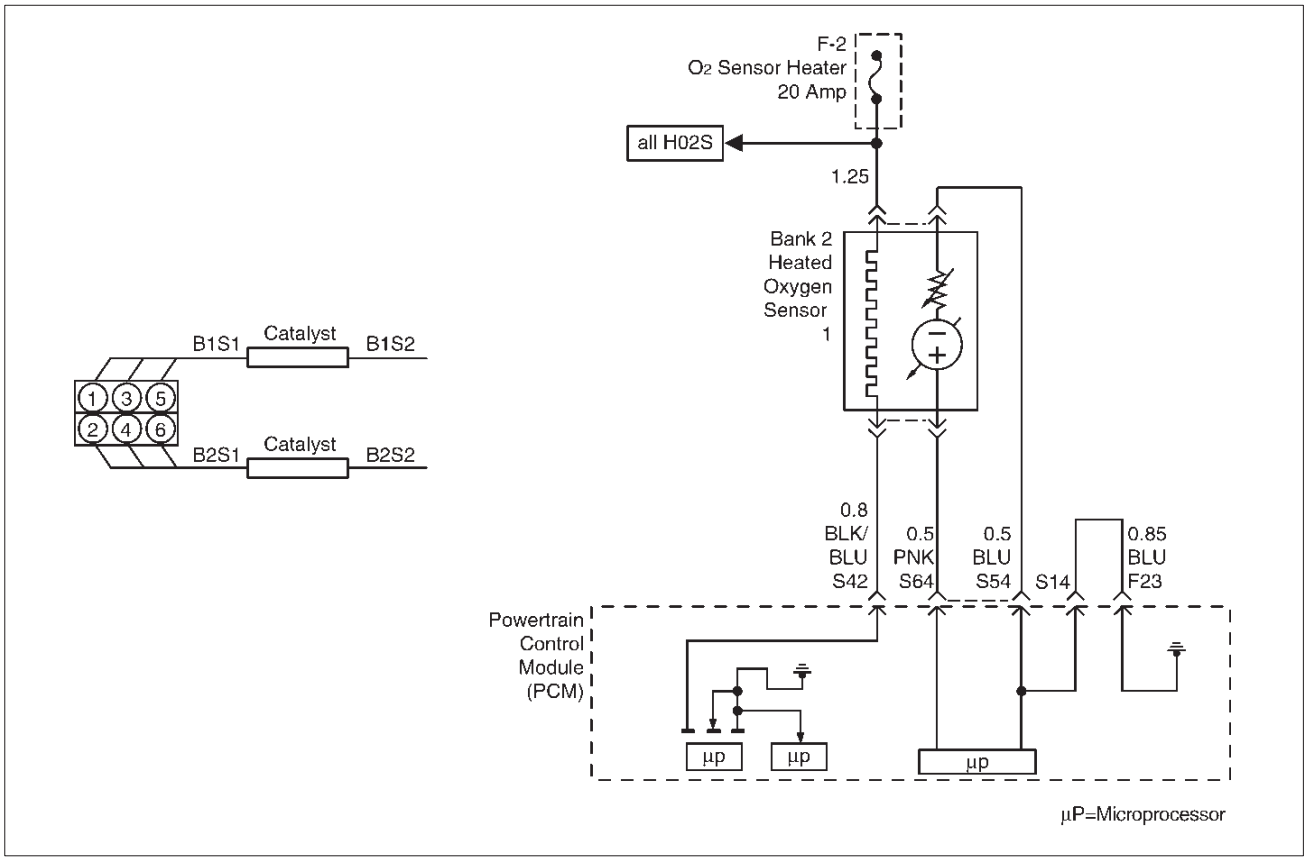

D06RY00175

Circuit Description

To provide the best possible combination of driveability, fuel economy, and emission control, a “closed loop” air/fuel metering system is used. While in “closed loop,” the powertrain control module (PCM) monitors the Bank 1 HO2S 1 and Bank 2 HO2S 1 signals and adjusts fuel delivery based upon the HO2S signal voltages. A change made to fuel delivery will be indicated by the long and short term fuel trim values which can be monitored with a Tech 2. Ideal fuel trim values are around 0%; if the HO2S signals are indicating a lean condition the PCM will add fuel, resulting in fuel trim values above 0%. If a rich condition is detected, the fuel trim values will be below 0%, indicating that the PCM is reducing the amount of fuel delivered. If an excessively rich condition is detected on Bank 2, the PCM will set DTC P0175.

The PCM’s maximum authority to control long term fuel trim allows a range between –15%(automatic transmission) or –12%(manual transmission) and +20%. The PCM’s maximum authority to control short term fuel trim allows a range between –11% and +20%. The PCM monitors fuel trim under various engine speed/load fuel trim cells before determining the status of the fuel trim diagnostic.

Conditions for Setting the DTC

- No Tech 2 test is being run.
- None of the following DTCs are set: idle system, EGR, HO2S, (response, transition, open, low volts, no activity), MAF, TPS, MAP, IAT, canister purge, EVAP, injector circuit, or misfire.
- Engine coolant temperature is between 25˚C (77˚F) and 100˚C (212˚F).
- Intake air temperature is between –40˚C (–40˚F) and 120˚C (248˚F).
- Manifold absolute pressure is between 24 kPa and 99 kPa.
- Throttle angle is steady between 3 and 95%.
- Vehicle speed is below 136 km/h (85 mph).
- Engine speed is between 400 and 6,000 RPM.
- Barometric pressure is greater than 72.5 kPa.
- Mass air flow is between 2 g/second and 200 g/second.
- Ignition voltage is above 9.5 volts.
- Fuel system is in “closed loop.”

Action Taken When the DTC Sets

- The PCM will illuminate the malfunction indicator lamp (MIL) after the second consecutive trip in which the failure is detected.
- The PCM will store conditions which were present when the DTC was set as Freeze Frame and in the Failure Records data.

Conditions for Clearing the MIL/DTC

- The PCM will turn the MIL “OFF” on the third consecutive trip cycle during which the diagnostic has been run and the fault condition is no longer present.
- A history DTC P0175 will clear after 40 consecutive warm-up cycles have occurred without a fault.

Downloaded from www.Manualslib.com manuals search engine

- DTC P0175 can be cleared by using the Tech 2 “Clear Info” function or by disconnecting the PCM battery feed.

Diagnostic Aids

Check for the following conditions:

- Poor connection at PCM – Inspect harness connectors for backed -out terminals, improper mating, broken locks, improperly formed or damaged terminals, and poor terminal-to-wire connection.
- Damaged harness – Inspect the wiring harness for damage. If the harness appears to be OK, observe the Bank 2 HO2S 1 display on the Tech 2 while moving connectors and wiring harnesses related to the engine harness. A change in the display will indicate the location of the fault.

Reviewing the Failure Records Vehicle mileage since the diagnostic test last failed may help determine how often the condition that caused the DTC to be set occurs. This may assist in diagnosing the condition.

Test Description

Number(s) below refer to the step number(s) on the Diagnostic Chart.

2. DTCs other than P0172 and P0175 may indicate a condition present which may cause a lean condition. If this is the case, repairing the condition which caused the other DTC will most likely correct the DTC P0172/P0175.

4. If the DTC P0175 test passes while the Failure Records conditions are being duplicated, the rich condition is intermittent. Refer to *Diagnostic Aids* or *Symptoms* for additional information on diagnosing intermittent problems.

DTC P0175 – Fuel Trim System Rich Bank 2

Step	Action	Value(s)	Yes	No
1	Was the ”On-Board Diagnostic (OBD) System Check” performed?	—	Go to Step 2	Go to *OBD System Check*
2	Are any DTCs set other than P0172 and P0175?	—	Go to the applicable DTC charts and repair the other DTCs before proceeding with this chart.	Go to *Step 3*
3	1. Start the engine and operate the vehicle in “closed loop.” 2. Observe the “BANK 2 L.T. FUEL TRIM” display on the Tech 2. Is the displayed value more negative than the specified value?	L.T. Fuel Trim: –15% (auto. trans.) OR –12% (man. trans.)	Go to *Step 5*	Go to *Step 4*
4	1. Review and record the Tech 2 Failure Records data. 2. Clear the DTC P0172/P0175 and operate the vehicle to duplicate the Failure Records conditions. 3. Monitor the Tech 2 “DTC” info for DTC P0175 while operating the vehicle to duplicate the Failure Records conditions. 4. Continue operating the vehicle until the DTC P0175 test runs. 5. Note the test result. Does the Tech 2 indicate DTC P0175 failed this ignition?	—	Go to *Step 5*	The rich condition is not present. If a driveability symptom still exists, refer to *Symptoms*.
5	Was DTC P0172 also set?	—	Go to *Step 6*	Go to *Step 15*
6	Visually and physically inspect the air filter element and replace it if necessary. Did the air filter require replacement?	—	Verify repair	Go to *Step 7*
7	Visually and physically inspect the air intake duct for collapse or restriction and repair if necessary. Did your inspection reveal a problem requiring repair?	—	Verify repair	Go to *Step 8*

Downloaded from www.Manualslib.com manuals search engine

DTC P0175 – Fuel Trim System Rich Bank 2 (Cont'd)

Step	Action	Value(s)	Yes	No
8	Inspect the MAF sensor inlet screen for damage or for the presence of foreign objects which may partially block air flow through the screen and correct any problem found. Did your inspection of the MAF sensor reveal a condition requiring repair or replacement?	—	Verify repair	Go to *Step 9*
9	Start the engine and note the idle quality. Is a low or unsteady idle being experienced?	—	Go to *Step 10*	Go to *Step 11*
10	1. Turn the ignition off and physically inspect the throttle body bore, throttle plate, and IAC passages for coking and foreign objects. 2. If a problem was found, repair as necessary. Did your inspection reveal a condition requiring repair?	—	Verify repair	Go to *Step 11*
11	1. Disconnect the vacuum hose from the fuel pressure regulator and inspect the hose for the presence of fuel. 2. If fuel is present in the vacuum hose, replace the fuel pressure regulator (refer to *Fuel Metering System*). Did the fuel pressure regulator require replacement?	—	Verify repair	Go to *Step 12*
12	1. Ignition "ON," engine "OFF." 2. Monitor the TP Angle display on the Tech 2 while slowly depressing the accelerator pedal. Does the TP Angle display increase steadily and evenly from minimum value at closed throttle to maximum value at wide-open throttle?	Minimum 8% Maximum 92%	Go to *Step 13*	Go to *Step 21*
13	1. Disconnect the MAF sensor electrical connector. 2. Operate the vehicle in "closed loop" while monitoring the "BANK 2 L.T. FUEL TRIM" and "BANK 2 S.T. FUEL TRIM" display on the Tech 2. Did both values change to near the specified value?	0%	Go to *Step 22*	Go to *Step 14*
14	1. Perform the "Fuel System Pressure Test." 2. If Fuel System Pressure Test isolates a problem, repair as necessary (refer to *Engine Fuel* or *Fuel Metering System*). Did the Fuel System Pressure Test isolate a condition requiring repair?	—	Verify repair	Go to *Step 15*
15	1. Ignition "ON," engine "OFF." 2. Connect a test light between the harness connector terminals of canister purge solenoid. Is the test light on?	—	Go to *Step 16*	Go to *Step 19*
16	Check for short to ground in the wire (red/yel) between the canister purge solenoid and PCM terminal S-7. Was there a short to ground?	—	Go to *Step 17*	Go to *Step 18*
17	Repair the short to ground. Is the action complete?	—	Verify repair	—

Downloaded from www.Manualslib.com manuals search engine

DTC P0175 – Fuel Trim System Rich Bank 2 (Cont'd)

Step	Action	Value(s)	Yes	No
18	Replace the PCM. **IMPORTANT:** The replacement PCM must be programmed. Refer to *On-Vehicle Service* in *Powertrain Control Module and Sensors* for procedures. And also refer to the latest Service Bulletin. Check to see if the Latest software is released or not. And then Down Load the LATEST PROGRAMMED SOFTWARE to the replacement PCM. Is the action complete?	—	Verify repair	—
19	1. Perform the "Injector Balance Test." 2. If the Injector Balance Test isolates a problem, repair as necessary (refer to *Fuel Metering System*). Did the Injector Balance Test isolate a problem requiring repair?	—	Verify repair	Go to *Step 20*
20	1. Remove and visually/physically inspect the Bank 2 HO2S 1 for silicon contamination. This will be indicated by a powdery deposit on the portion of the HO2S that is exposed to the exhaust stream. 2. If contamination is evident on the Bank 2 HO2S 1, replace the contaminated sensor. Did the sensor require replacement?	—	Verify repair	Refer to *Diagnostic Aids*
21	1. Check the TP sensor mounting screws and tighten or replace them as necessary if they are loose or missing. 2. If the screws are OK, replace the TP sensor. Is the action complete?	—	Verify repair	—
22	Replace the MAF sensor. Is the action complete?	—	Verify repair	—

Downloaded from www.Manualslib.com manuals search engine

Diagnostic Trouble Code (DTC) P0201 Injector 1 Control Circuit

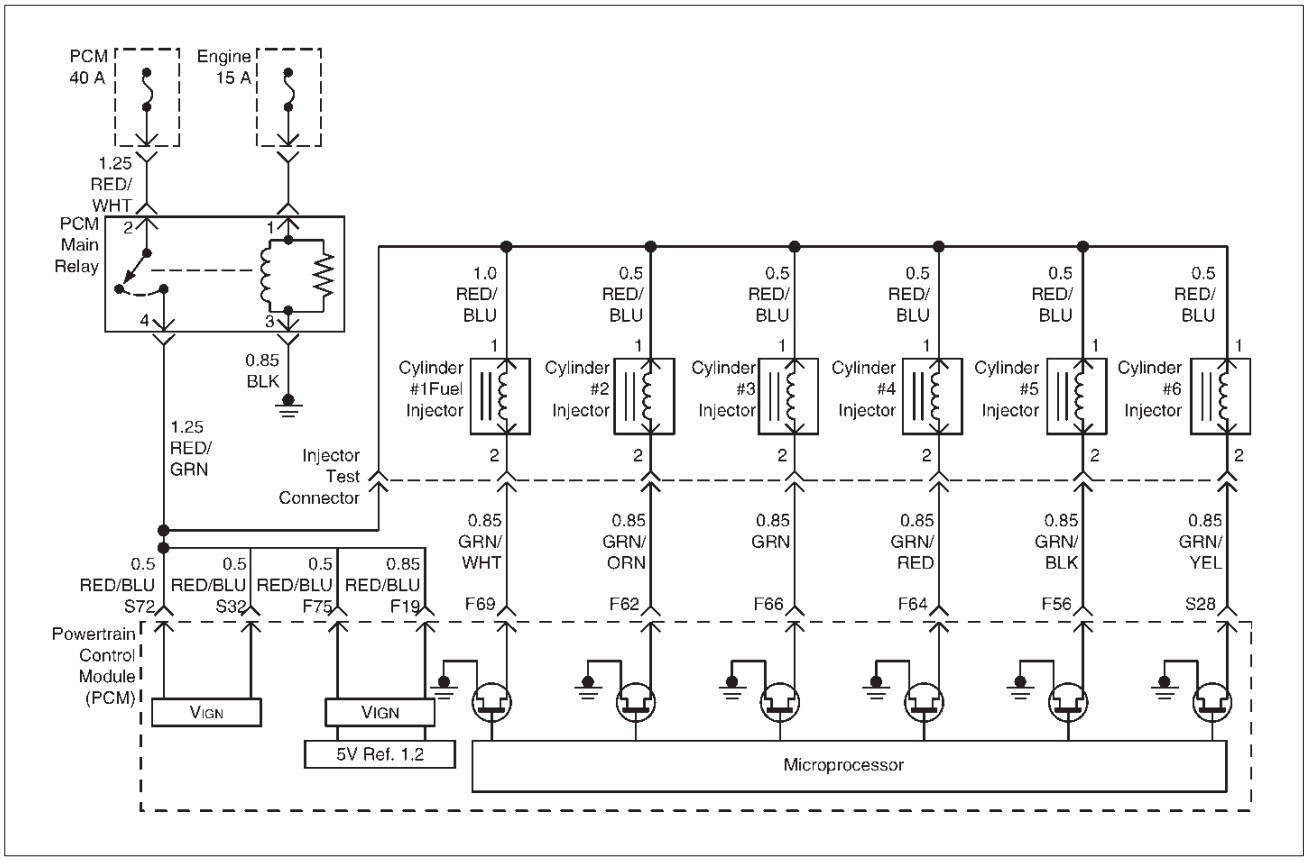

D06RY00086

Circuit Description

The powertrain control module (PCM) has six individual injector driver circuits. Each controls an injector. When a driver circuit is grounded by the PCM, the injector is activated. The PCM monitors the current in each driver circuit. The voltage on each driver is monitored to detect a fault. If the voltage is not what the PCM expects to monitor on the circuit, a DTC is set. This DTC is also set if an injector driver is shorted to voltage or if there is an open circuit.

Conditions for Setting the DTC

- The battery voltage is more than 9 volts.
- The engine is turning, determined by 58X crankshaft position input signal.
- The injector voltage does not equal the ignition voltage when the injector is commanded “OFF” or the injector voltage does not equal 0 volts when the injector is commanded “ON.”
- The above conditions are met for 15 seconds.

Action Taken When the DTC Sets

- The PCM will illuminate the malfunction indicator lamp (MIL) the first time the fault is detected.
- The PCM will store conditions which were present when the DTC was set as Freeze Frame and in the Failure Records data.

Conditions for Clearing the MIL/DTC

- The PCM will turn “OFF” the MIL on the third consecutive trip cycle in which the diagnostic has been run and the fault is no longer present.
- A history DTC P0201 will clear after 40 consecutive warm-up cycles occur without a fault.
- DTC P0201 can be cleared by using the Tech 2 “Clear Info” function or by disconnecting the PCM battery feed.

Diagnostic Aids

An injector driver circuit that is open or shorted to voltage will cause a DTC P0201 to set. It will also cause a misfire due to an inoperative injector. A misfire DTC will also be set indicating which cylinder is inoperative.
Long term and short term fuel trims that are excessively high or low are a good indication that an injector is faulty. Use Fuel Injector Coil Test Procedure to check for faulty injectors.

Test Description

The number(s) below refer to the step number(s) on the Diagnostic Chart.

3. This step determines if DTC P0201 is the result of a hard failure or an intermittent condition.

Downloaded from www.Manualslib.com manuals search engine

5. A special injector test connector is provided so that the injectors can be electrically tested without removal of the manifold. The test connector can be identified by the blue connector lock which is tethered to the wiring harness. If the light for cylinder 1 is “ON” steady before cranking the engine as well as while cranking the engine, then the injector driver circuit is shorted to ground.

   If the test light blinks while cranking, the PCM and the wiring to the injectors are OK. The Fuel Injector Coil Test Procedure will check if the injectors are faulty.

7. Because the test light was “ON” steady, voltage to the injector is OK, but the driver circuit is grounded at all times. This step determines if the circuit is shorted to ground or the PCM is faulty.

9. The reading should be about 12-14μ .

10. Locating the open in the harness or in the injector will require removal of the manifold to provide access.

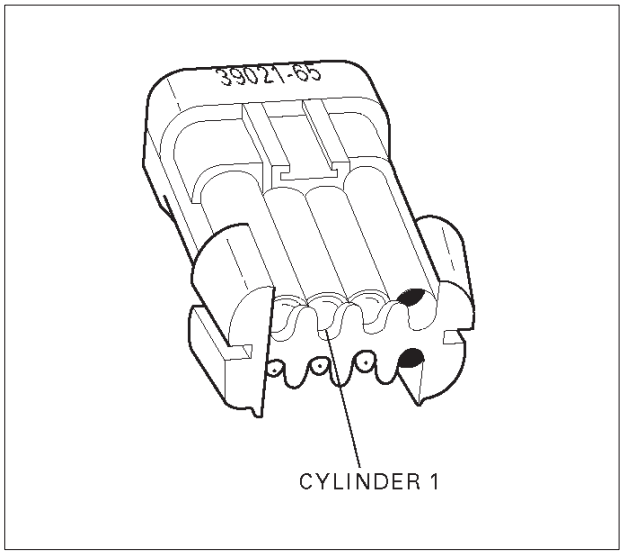

R321054

DTC P0201 – Injector 1 Control Circuit

Step	Action	Value(s)	Yes	No
1	Was the “On-Board Diagnostic (OBD) System Check” performed?	—	Go to *Step 2*	Go to *OBD System Check*
2	Will the engine start?	—	Go to *Step 3*	Go to *Engine Cranks But Will Not Run* chart
3	1. Install the Tech 2. Clear the DTC. 2. Idle the engine for one minute. Does DTC P0201 reset?	—	Go to *Step 5*	Go to *Step 4*
4	1. Review the Freeze Frame data with the ignition “ON” and the engine “OFF” and note the parameters. 2. Operate the vehicle within the Freeze Frame conditions as noted. Does P0201 reset?	—	Go to *Step 5*	Go to *Diagnostic Aids*

Downloaded from www.Manualslib.com manuals search engine

DTC P0201 – Injector 1 Control Circuit (Cont'd)

Step	Action	Value(s)	Yes	No
5	1. Engine "OFF." 2. Disconnect the injector connector. 3. Install an injector test light J-39021-65 on the injector test connector. 4. Crank the engine and note the light. Does the injector test light blink?	—	Go to *Fuel Injector Coil Test Procedure*	Go to *Step 6*
6	Note whether the injector test light for cylinder 1 was "OFF" or "ON" steady in step 5. Was the test light "ON" steady while cranking the engine?	—	Go to *Step 7*	Go to *Step 9*
7	1. Disconnect the PCM connector for the affected injectors. 2. With a test light connected to B+, probe the affected injector driver circuit. Does the test light illuminate?	—	Go to *Step 8*	Go to *Step 15*
8	Repair short to ground in the injector driver circuit. Is the action complete?	—	Go to *OBD System Check*	—
9	1. Disconnect the injector test connector. 2. At the injector side of the harness, connect an ohmmeter between the positive wire (red with blue tracer) and the wire for cylinder 1 (green with white tracer). Does the ohmmeter indicate continuity?	—	Go to *Step 11*	Go to *Step 10*
10	Repair the open injector harness wire or open injector. Is the action complete?	—	Verify repair	—
11	At the PCM side of the injector test connector, check the green/white wire for a short to voltage. Was there a short to voltage?	—	Go to *Step 12*	Go to *Step 13*
12	Repair the short to voltage. Is the action complete?	—	Verify repair	—
13	Check for an open circuit between the injector test connector and the PCM. Was there an open circuit?	—	Go to *Step 14*	Go to *Step 15*
14	Repair the open circuit. Is the action complete?	—	Verify repair	—
15	Replace the PCM. **IMPORTANT:** The replacement PCM must be programmed. Refer to *On-Vehicle Service* in *Powertrain Control Module and Sensors* for procedures. And also refer to the latest Service Bulletin. Check to see if the Latest software is released or not. And then Down Load the LATEST PROGRAMMED SOFTWARE to the replacement PCM. Is the action complete?	—	Verify repair	—

Downloaded from www.Manualslib.com manuals search engine

Diagnostic Trouble Code (DTC) P0202 Injector 2 Control Circuit

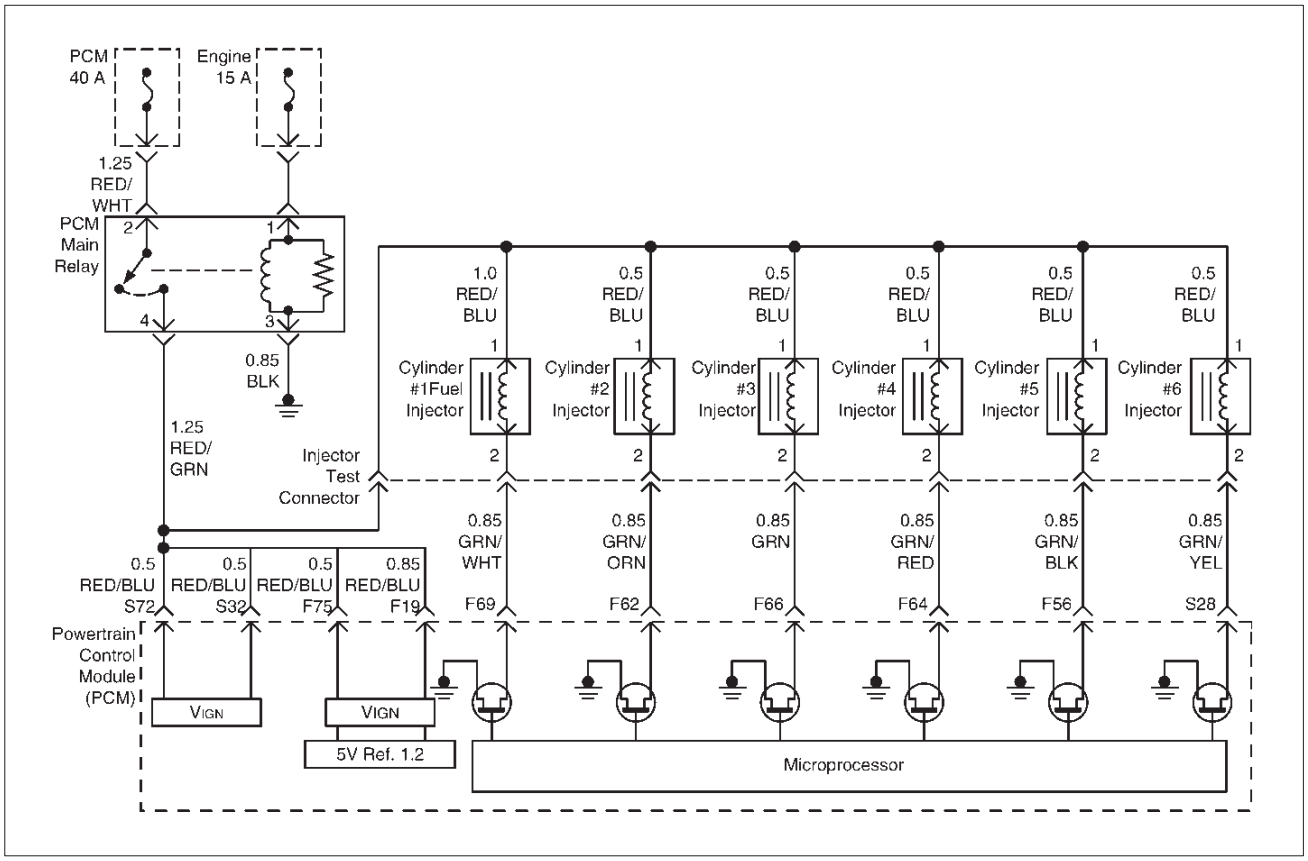

D06RY00086

Circuit Description

The powertrain control module (PCM) has six individual injector driver circuits. Each controls an injector. When a driver circuit is grounded by the PCM, the injector is activated. The PCM monitors the current in each driver circuit. The voltage on each driver is monitored to detect a fault. If the voltage is not what the PCM expects to monitor on the circuit, a DTC is set. This DTC is also set if an injector driver is shorted to voltage or if there is an open circuit.

Conditions for Setting the DTC

- The battery voltage is more than 9 volts.
- The engine is turning, determined by 58X crankshaft position input signal.
- The injector voltage does not equal the ignition voltage when the injector is commanded “OFF” or the injector voltage does not equal 0 volts when the injector is commanded “ON.”
- The above conditions are met for 15 seconds.

Action Taken When the DTC Sets

- The PCM will illuminate the malfunction indicator lamp (MIL) the first time the fault is detected.
- The PCM will store conditions which were present when the DTC was set as Freeze Frame and in the Failure Records data.

Conditions for Clearing the MIL/DTC

- The PCM will turn “OFF” the MIL on the third consecutive trip cycle in which the diagnostic has been run and the fault is no longer present.
- A history DTC P0202 will clear after 40 consecutive warm-up cycles occur without a fault.
- DTC P0202 can be cleared by using the Tech 2 “Clear Info” function or by disconnecting the PCM battery feed.

Diagnostic Aids

An injector driver circuit that is open or shorted to voltage will cause a DTC P0202 to set. It will also cause a misfire due to an inoperative injector. A misfire DTC will also be set indicating which cylinder is inoperative.
Long term and short term fuel trims that are excessively high or low are a good indication that an injector is faulty. Use Fuel Injector Coil Test Procedure to check for faulty injectors.

Test Description

The number(s) below refer to the step number(s) on the Diagnostic Chart.

3. This step determines if DTC P0202 is the result of a hard failure or an intermittent condition.

Downloaded from www.Manualslib.com manuals search engine

5. A special injector test connector is provided so that the injectors can be electrically tested without removal of the manifold. The test connector can be identified by the blue connector lock which is tethered to the wiring harness. If the light for cylinder 2 is “ON” steady before cranking the engine as well as while cranking the engine, then the injector driver circuit is shorted to ground.

   If the test light blinks while cranking, the PCM and the wiring to the injectors are OK. The Fuel Injector Coil Test Procedure will check if the injectors are faulty.

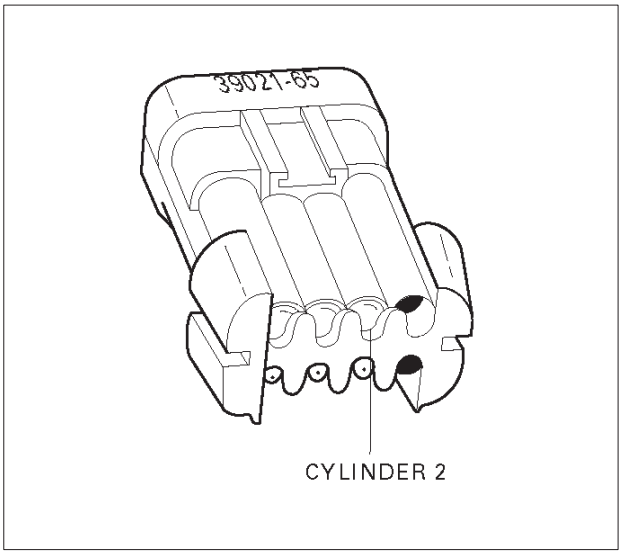

R321055

7. Because the test light was “ON” steady, voltage to the injector is OK, but the driver circuit is grounded at all times. This step determines if the circuit is shorted to ground or the PCM is faulty.

9. The reading should be about 12-14μ .

10. Locating the open in the harness or in the injector will require removal of the manifold to provide access.

DTC P0202 – Injector 2 Control Circuit

Step	Action	Value(s)	Yes	No
1	Was the “On-Board Diagnostic (OBD) System Check” performed?	—	Go to *Step 2*	Go to *OBD System Check*
2	Will the engine start?	—	Go to *Step 3*	Go to *Engine Cranks But Will Not Run* chart
3	1. Install the Tech 2. Clear the DTC. 2. Idle the engine for one minute. Does DTC P0202 reset?	—	Go to *Step 5*	Go to *Step 4*
4	1. Review the Freeze Frame data with the ignition “ON” and the engine “OFF” and note the parameters. 2. Operate the vehicle within the Freeze Frame conditions as noted. Does P0202 reset?	—	Go to *Step 5*	Go to *Diagnostic Aids*

Downloaded from www.Manualslib.com manuals search engine

DTC P0202 – Injector 2 Control Circuit (Cont'd)

Step	Action	Value(s)	Yes	No
5	1. Engine "OFF." 2. Disconnect the injector test connector. 3. Install an injector test light J-39021-65 on injector connector. 4. Crank the engine and note the light. Does the cylinder 2 test light blink?	—	Go to *Fuel Injector Coil Test Procedure*	Go to *Step 6*
6	Note whether the injector test light for cylinder 2 was "OFF" or "ON" steady in step 5. Was the test light "ON" steady while cranking the engine?	—	Go to *Step 7*	Go to *Step 9*
7	1. Disconnect the PCM connector for the affected injectors. 2. With a test light connected to B+, probe the affected injector driver circuit. Does the test light illuminate?	—	Go to *Step 8*	Go to *Step 15*
8	Repair short to ground in the injector driver circuit. Is the action complete?	—	Go to *OBD System Check*	—
9	1. Disconnect the injector test connector. 2. At the injector side of the harness, connect an ohmmeter between the positive wire (red with blue tracer) and the wire for cylinder 2 (green with orange tracer). Does the ohmmeter indicate continuity?	—	Go to *Step 11*	Go to *Step 10*
10	Repair the open injector harness wire or open injector. Is the action complete?	—	Verify repair	—
11	At the PCM side of the injector test connector, check the green/orange wire for a short to voltage. Was there a short to voltage?	—	Go to *Step 12*	Go to *Step 13*
12	Repair the short to voltage. Is the action complete?	—	Verify repair	—
13	Check for an open circuit between the injector test connector and the PCM. Was there an open circuit?	—	Go to *Step 14*	Go to *Step 15*
14	Repair the open circuit. Is the action complete?	—	Verify repair	—
15	Replace the PCM. **IMPORTANT:** The replacement PCM must be programmed. Refer to *On-Vehicle Service* in *Powertrain Control Module and Sensors* for procedures. And also refer to the latest Service Bulletin. Check to see if the Latest software is released or not. And then Down Load the LATEST PROGRAMMED SOFTWARE to the replacement PCM. Is the action complete?	—	Verify repair	—

Downloaded from www.Manualslib.com manuals search engine

Diagnostic Trouble Code (DTC) P0203 Injector 3 Control Circuit

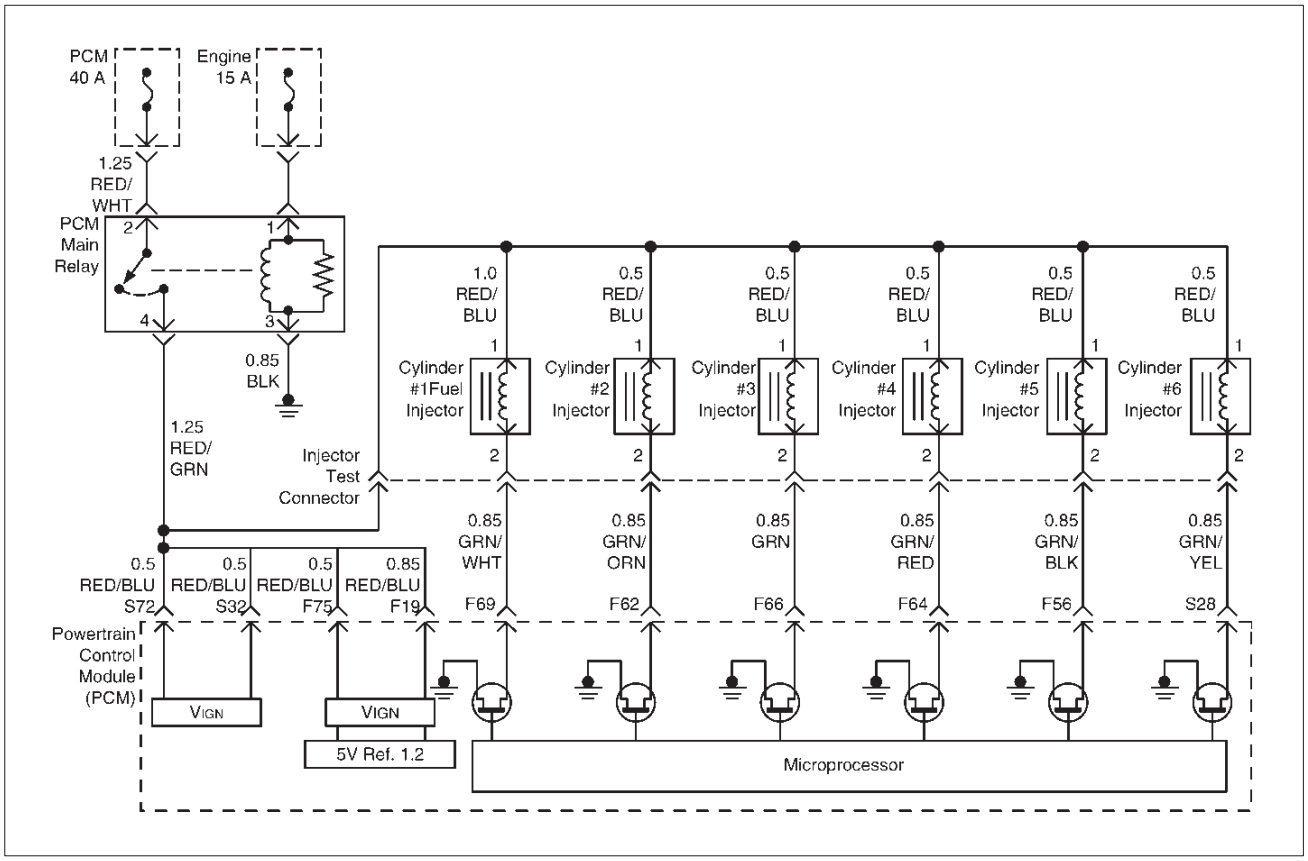

D06RY00086

Circuit Description

The powertrain control module (PCM) has six individual injector driver circuits. Each controls an injector. When the driver circuit is grounded by the PCM, the injector is activated. The PCM monitors the current in each driver circuit. The voltage on each driver is monitored to detect a fault. If the voltage is not what the PCM expects to monitor on the circuit, a DTC is set. This DTC is also set if an injector driver is shorted to voltage or if there is an open circuit.

Conditions for Setting the DTC

- The battery voltage is more than 9 volts.
- The engine is turning, determined by the 58X crankshaft position input signal.
- The injector voltage does not equal the ignition voltage when the injector is commanded “OFF” or the injector voltage does not equal 0 volts when the injector is commanded “ON.”
- The above conditions are met for 15 seconds.

Action Taken When the DTC Sets

- The PCM will illuminate the malfunction indicator lamp (MIL) the first time the fault is detected.
- The PCM will store conditions which were present when the DTC was set as Freeze Frame and in the Failure Records data.

Conditions for Clearing the MIL/DTC

- The PCM will turn “OFF” the MIL on the third consecutive trip cycle in which the diagnostic has been run and the fault is no longer present.
- A history DTC P0203 will clear after 40 consecutive warm-up cycles occur without a fault.
- DTC P0203 can be cleared by using the Tech 2 “Clear Info” function or by disconnecting the PCM battery feed.

Diagnostic Aids

An injector driver circuit that is open or shorted to voltage will cause a DTC P0203 to set. It will also cause a misfire due to an inoperative injector. A misfire DTC will also be set indicating which cylinder is inoperative.
Long term and short term fuel trims that are excessively high or low are a good indication that an injector is faulty. Use Fuel Injector Coil Test Procedure to check for faulty injectors.

Test Description

The number(s) below refer to the step number(s) on the Diagnostic Chart.

3. This step determines if DTC P0203 is the result of a hard failure or an intermittent condition.

Downloaded from www.Manualslib.com manuals search engine

5. A special injector test connector is provided so that the injectors can be electrically tested without removal of the manifold. The test connector can be identified by the blue connector lock which is tethered to the wiring harness. If the light for cylinder 3 is “ON” steady before cranking the engine as well as while cranking the engine, then the injector driver circuit is shorted to ground.

   If the test light blinks while cranking, the PCM and the wiring to the injectors are OK. The Fuel Injector Coil Test Procedure will check if the injectors are faulty.

7. Because the test light was “ON” steady, voltage to the injector is OK, but the driver circuit is grounded at all times. This step determines if the circuit is shorted to ground or the PCM is faulty.

9. The reading should be about 12-14μ .

10. Locating the open in the harness or in the injector will require removal of the manifold to provide access.

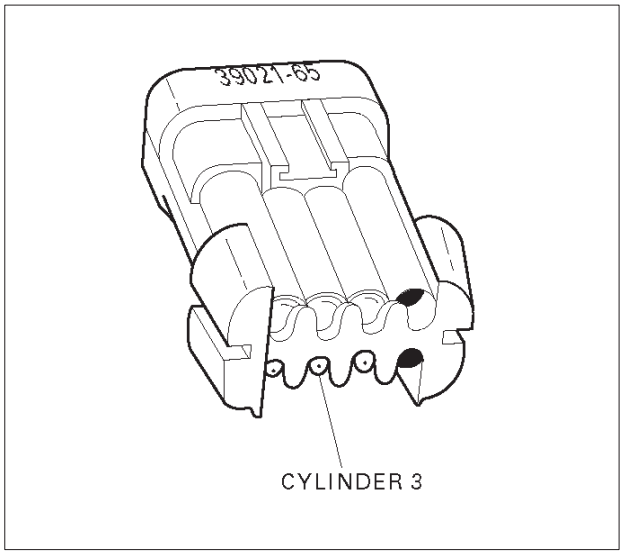

R321056

DTC P0203 – Injector 3 Control Circuit

Step	Action	Value(s)	Yes	No
1	Was the “On-Board Diagnostic (OBD) System Check” performed?	—	Go to *Step 2*	Go to *OBD System Check*
2	Will the engine start?	—	Go to *Step 3*	Go to *Engine Cranks But Will Not Run* chart
3	1. Install the Tech 2. Clear the DTC. 2. Idle the engine for one minute. Does DTC P0203 reset?	—	Go to *Step 5*	Go to *Step 4*
4	1. Review the Freeze Frame data with the ignition “ON” and the engine “OFF” and note the parameters. 2. Operate the vehicle within the Freeze Frame conditions as noted. Does P0203 reset?	—	Go to *Step 5*	Go to *Diagnostic Aids*

Downloaded from www.Manualslib.com manuals search engine

DTC P0203 – Injector 3 Control Circuit (Cont'd)

Step	Action	Value(s)	Yes	No
5	1. Engine "OFF." 2. Disconnect the injector test connector . 3. Install an injector test light J-39021-65 on injector connector. 4. Crank the engine and note the light. Does the cylinder 3 test light blink?	—	Go to *Fuel Injector Coil Test Procedure*	Go to *Step 6*
6	Note whether the injector test light for cylinder 3 was "OFF" or "ON" steady in step 5. Was the test light "ON" steady while cranking the engine?	—	Go to *Step 7*	Go to *Step 9*
7	1. Disconnect the PCM connector for the affected injectors. 2. With a test light connected to B+, probe the affected injector driver circuit. Does the test light illuminate?	—	Go to *Step 8*	Go to *Step 15*
8	Repair short to ground in the injector driver circuit. Is the action complete?	—	Go to *OBD System Check*	—
9	1. Disconnect the injector test connector. 2. At the injector side of the harness, connect an ohmmeter between the positive wire (red with blue tracer) and the wire for cylinder 3 (green). Does the ohmmeter indicate continuity?	—	Go to *Step 11*	Go to *Step 10*
10	Repair the open injector harness wire or open injector. Is the action complete?	—	Verify repair	—
11	At the PCM side of the injector test connector, check the green wire for a short to voltage. Was there a short to voltage?	—	Go to *Step 12*	Go to *Step 13*
12	Repair the short to voltage. Is the action complete?	—	Verify repair	—
13	Check for an open circuit between the injector test connector and the PCM. Was there an open circuit?	—	Go to *Step 14*	Go to *Step 15*
14	Repair the open circuit. Is the action complete?	—	Verify repair	—
15	Replace the PCM. **IMPORTANT:** The replacement PCM must be programmed. Refer to *On-Vehicle Service* in *Powertrain Control Module and Sensors* for procedures. And also refer to the latest Service Bulletin. Check to see if the Latest software is released or not. And then Down Load the LATEST PROGRAMMED SOFTWARE to the replacement PCM. Is the action complete?	—	Verify repair	—

Downloaded from www.Manualslib.com manuals search engine

Diagnostic Trouble Code (DTC) P0204 Injector 4 Control Circuit

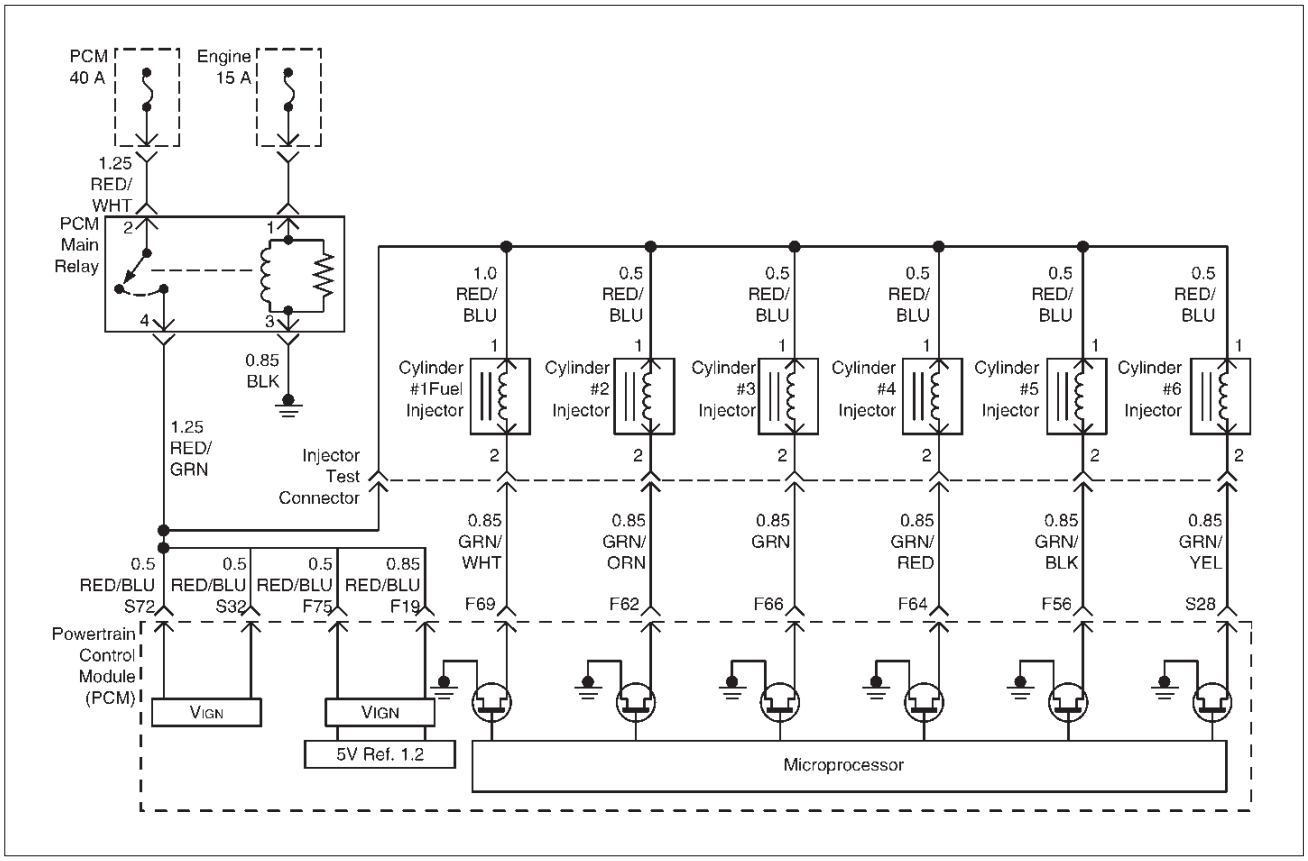

D06RY00086

Circuit Description

The powertrain control module (PCM) has six individual injector driver circuits. Each controls an injector. When the driver circuit is grounded by the PCM, the injector is activated. The PCM monitors the current in each driver circuit. The voltage on each driver is monitored to detect a fault. If the voltage is not what the PCM expects to monitor on the circuit, a DTC is set. This DTC is also set if an injector driver is shorted to voltage or if there is an open circuit.

Conditions for Setting the DTC

- The battery voltage is more than 9 volts.
- The engine is turning, determined by the 58X crankshaft position input signal.
- The injector voltage does not equal the ignition voltage when the injector is commanded “OFF” or the injector voltage does not equal 0 volts when the injector is commanded “ON.”
- The above conditions are met for 15 seconds.

Action Taken When the DTC Sets

- The PCM will illuminate the malfunction indicator lamp (MIL) the first time the fault is detected.
- The PCM will store conditions which were present when the DTC was set as Freeze Frame and in the Failure Records data.

Conditions for Clearing the MIL/DTC

- The PCM will turn “OFF” the MIL on the third consecutive trip cycle in which the diagnostic has been run and the fault is no longer present.
- A history DTC P0204 will clear after 40 consecutive warm-up cycles occur without a fault.
- DTC P0204 can be cleared by using the Tech 2 “Clear Info” function or by disconnecting the PCM battery feed.

Diagnostic Aids

An injector driver circuit that is open or shorted to voltage will cause a DTC P0204 to set. It will also cause a misfire due to an inoperative injector. A misfire DTC will also be set indicating which cylinder is inoperative.
Long term and short term fuel trims that are excessively high or low are a good indication that an injector is faulty. Use Fuel Injector Coil Test Procedure to check for faulty injectors.

Test Description

The number(s) below refer to the step number(s) on the Diagnostic Chart.

3. This step determines if DTC P0204 is the result of a hard failure or an intermittent condition.

Downloaded from www.Manualslib.com manuals search engine

5. A special injector test connector is provided so that the injectors can be electrically tested without removal of the manifold. The test connector can be identified by the blue connector lock which is tethered to the wiring harness. If the light for cylinder 4 is “ON” steady before cranking the engine as well as while cranking the engine, then the injector driver circuit is shorted to ground.

   If the test light blinks while cranking, the PCM and the wiring to the injectors are OK. The Fuel Injector Coil Test Procedure will check if the injectors are faulty.

7. Because the test light was “ON” steady, voltage to the injector is OK, but the driver circuit is grounded at all times. This step determines if the circuit is shorted to ground or the PCM is faulty.

9. The reading should be about 12-14μ .

10. Locating the open in the harness or in the injector will require removal of the manifold to provide access.

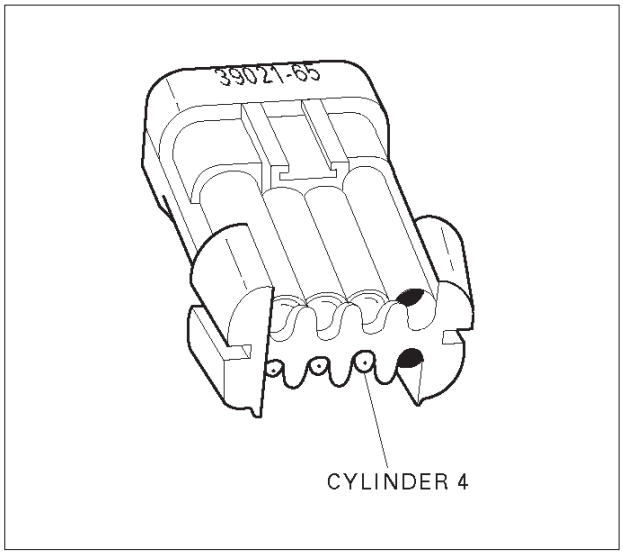

R321057

DTC P0204 – Injector 4 Control Circuit

Step	Action	Value(s)	Yes	No
1	Was the “On-Board Diagnostic (OBD) System Check” performed?	—	Go to *Step 2*	Go to *OBD System Check*
2	Will the engine start?	—	Go to *Step 3*	Go to *Engine Cranks But Will Not Run* chart
3	1. Install the Tech 2. Clear the DTC. 2. Idle the engine for one minute. Does DTC P0204 reset?	—	Go to *Step 5*	Go to *Step 4*
4	1. Review the Freeze Frame data with the ignition “ON” and the engine “OFF” and note the parameters. 2. Operate the vehicle within the Freeze Frame conditions as noted. Does P0204 reset?	—	Go to *Step 5*	Go to *Diagnostic Aids*

Downloaded from www.Manualslib.com manuals search engine

DTC P0204 – Injector 4 Control Circuit (Cont'd)

Step	Action	Value(s)	Yes	No
5	1. Engine "OFF." 2. Disconnect the injector test connector. 3. Install an injector test light J-39021-65 on injector connector. 4. Crank the engine and note the light. Does the cylinder 4 test light blink?	—	Go to *Fuel Injector Coil Test Procedure*	Go to Step 6
6	Note whether the injector test light for cylinder 4 was "OFF" or "ON" steady in step 5. Was the test light "ON" steady while cranking the engine?	—	Go to *Step 7*	Go to *Step 9*
7	1. Disconnect the PCM connector for the affected injectors. 2. With a test light connected to B+, probe the affected injector driver circuit. Does the test light illuminate?	—	Go to *Step 8*	Go to *Step 15*
8	Repair short to ground in the injector driver circuit. Is the action complete?	—	Go to *OBD System Check*	—
9	1. Disconnect the injector test connector. 2. At the injector side of the harness, connect an ohmmeter between the positive wire (red with blue tracer) and the wire for cylinder 4 (green/red). Does the ohmmeter indicate continuity?	—	Go to *Step 11*	Go to *Step 10*
10	Repair the open injector harness wire or open injector. Is the action complete?	—	Verify repair	—
11	At the PCM side of the injector test connector, check the green/red wire for a short to voltage. Was there a short to voltage?	—	Go to *Step 12*	Go to *Step 13*
12	Repair the short to voltage. Is the action complete?	—	Verify repair	—
13	Check for an open circuit between the injector test connector and the PCM. Was there an open circuit?	—	Go to *Step 14*	Go to *Step 15*
14	Repair the open circuit. Is the action complete?	—	Verify repair	—
15	Replace the PCM. **IMPORTANT:** The replacement PCM must be programmed. Refer to *On-Vehicle Service* in *Powertrain Control Module and Sensors* for procedures. And also refer to the latest Service Bulletin. Check to see if the Latest software is released or not. And then Down Load the LATEST PROGRAMMED SOFTWARE to the replacement PCM. Is the action complete?	—	Verify repair	—

Downloaded from www.Manualslib.com manuals search engine

Diagnostic Trouble Code (DTC) P0205 Injector 5 Control Circuit

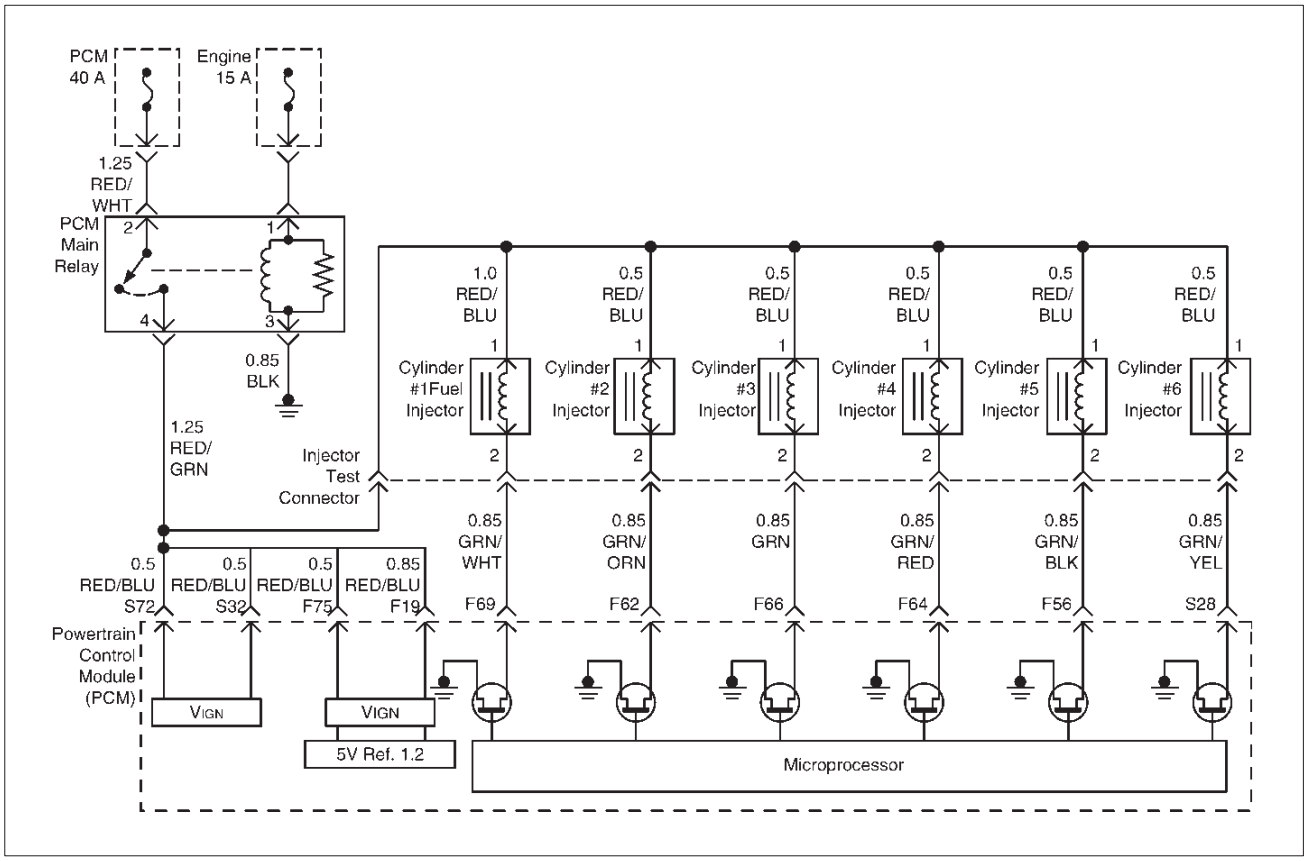

D06RY00086

Circuit Description

The powertrain control module (PCM) has six individual injector driver circuits. Each controls an injector. When the driver circuit is grounded by the PCM, the injector is activated. The PCM monitors the current in each driver circuit. If the voltage is not what the PCM expects to monitor on the circuit, a DTC is set. This DTC is also set if an injector driver is shorted to voltage or if there is an open circuit.

Conditions for Setting the DTC

- The battery voltage is more than 9 volts.
- The engine is turning, determined by the 58X crankshaft position input signal.
- The injector voltage does not equal the ignition voltage when the injector is commanded “OFF” or the injector voltage does not equal 0 volts when the injector is commanded “ON.”
- The above conditions are met for 15 seconds.

Action Taken When the DTC Sets

- The PCM will illuminate the malfunction indicator lamp (MIL) the first time the fault is detected.
- The PCM will store conditions which were present when the DTC was set as Freeze Frame and in the Failure Records data.

Conditions for Clearing the MIL/DTC

- The PCM will turn “OFF” the MIL on the third consecutive trip cycle in which the diagnostic has been run and the fault is no longer present.
- A history DTC P0205 will clear after 40 consecutive warm-up cycles occur without a fault.
- DTC P0205 can be cleared by using the Tech 2 “Clear Info” function or by disconnecting the PCM battery feed.

Diagnostic Aids

An injector driver circuit that is open or shorted to voltage will cause a DTC P0205 to set. It will also cause a misfire due to an inoperative injector. A misfire DTC will also be set indicating which cylinder is inoperative.
Long term and short term fuel trims that are excessively high or low are a good indication that an injector is faulty. Use Fuel Injector Coil Test Procedure to check for faulty injectors.

Test Description

The number(s) below refer to the step number(s) on the Diagnostic Chart.

3. This step determines if DTC P0205 is the result of a hard failure or an intermittent condition.

Downloaded from www.Manualslib.com manuals search engine

5. A special injector test connector is provided so that the injectors can be electrically tested without removal of the manifold.The test connector can be identified by the blue connector lock which is tethered to the wiring harness. If the light for cylinder 5 is “ON” steady before cranking the engine as well as while cranking the engine, then the injector driver circuit is shorted to ground.

   If the test light blinks while cranking, the PCM and the wiring to the injectors are OK. The Fuel Injector Coil Test Procedure will check if the injectors are faulty.

7. Because the test light was “ON” steady, voltage to the injector is OK, but the driver circuit is grounded at all times. This step determines if the circuit is shorted to ground or the PCM is faulty.

9. The reading should be about 12-14µ .

10. Locating the open in the harness or in the injector will require removal of the manifold to provide access.

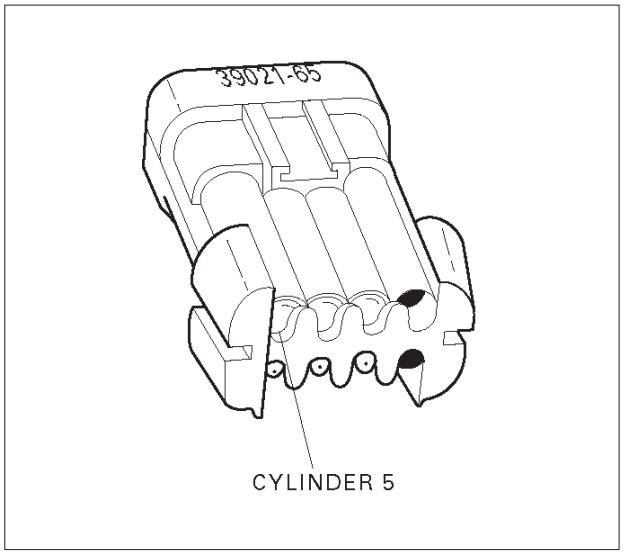

R321058

DTC P0205 – Injector 5 Control Circuit

Step	Action	Value(s)	Yes	No
1	Was the “On-Board Diagnostic (OBD) System Check” performed?	—	Go to *Step 2*	Go to *OBD System Check*
2	Will the engine start?	—	Go to *Step 3*	Go to *Engine Cranks But Will Not Run* chart
3	1. Install the Tech 2. Clear the DTC. 2. Idle the engine for one minute. Does DTC P0205 reset?	—	Go to *Step 5*	Go to *Step 4*
4	1. Review the Freeze Frame data with the ignition “ON” and the engine “OFF” and note the parameters. 2. Operate the vehicle within the Freeze Frame conditions as noted. Does P0205 reset?	—	Go to *Step 5*	Go to *Diagnostic Aids*

Downloaded from www.Manualslib.com manuals search engine

DTC P0205 – Injector 5 Control Circuit (Cont'd)

Step	Action	Value(s)	Yes	No
5	1. Engine "OFF." 2. Disconnect the injector test connector. 3. Install an injector test light J-39021-65 on injector connector. 4. Crank the engine and note the light. Does the cylinder 5 test light blink?	—	Go to *Fuel Injector Coil Test Procedure*	Go to *Step 6*
6	Note whether the injector test light for cylinder 5 was "OFF" or "ON" steady in step 5. Was the test light "ON" steady while cranking the engine?	—	Go to *Step 7*	Go to *Step 9*
7	1. Disconnect the PCM connector for the affected injectors. 2. With a test light connected to B+, probe the affected injector driver circuit. Does the test light illuminate?	—	Go to *Step 8*	Go to *Step 15*
8	Repair short to ground in the injector driver circuit. Is the action complete?	—	Go to *OBD System Check*	—
9	1. Disconnect the injector test connector. 2. At the injector side of the harness, connect an ohmmeter between the positive wire (red with blue tracer) and the wire for cylinder 5 (green with black tracer). Does the ohmmeter indicate continuity?	—	Go to *Step 11*	Go to *Step 10*
10	Repair the open injector harness wire or open injector. Is the action complete?	—	Verify repair	—
11	At the PCM side of the injector test connector, check the green/black wire for a short to voltage. Was there a short to voltage?	—	Go to *Step 12*	Go to *Step 13*
12	Repair the short to voltage. Is the action complete?	—	Verify repair	—
13	Check for an open circuit between the injector test connector and the PCM. Was there an open circuit?	—	Go to *Step 14*	Go to *Step 15*
14	Repair the open circuit. Is the action complete?	—	Verify repair	—
15	Replace the PCM. **IMPORTANT:** The replacement PCM must be programmed. Refer to *On-Vehicle Service* in *Powertrain Control Module and Sensors* for procedures. And also refer to the latest Service Bulletin. Check to see if the Latest software is released or not. And then Down Load the LATEST PROGRAMMED SOFTWARE to the replacement PCM. Is the action complete?	—	Verify repair	—

Downloaded from www.Manualslib.com manuals search engine

Diagnostic Trouble Code (DTC) P0206 Injector 6 Control Circuit

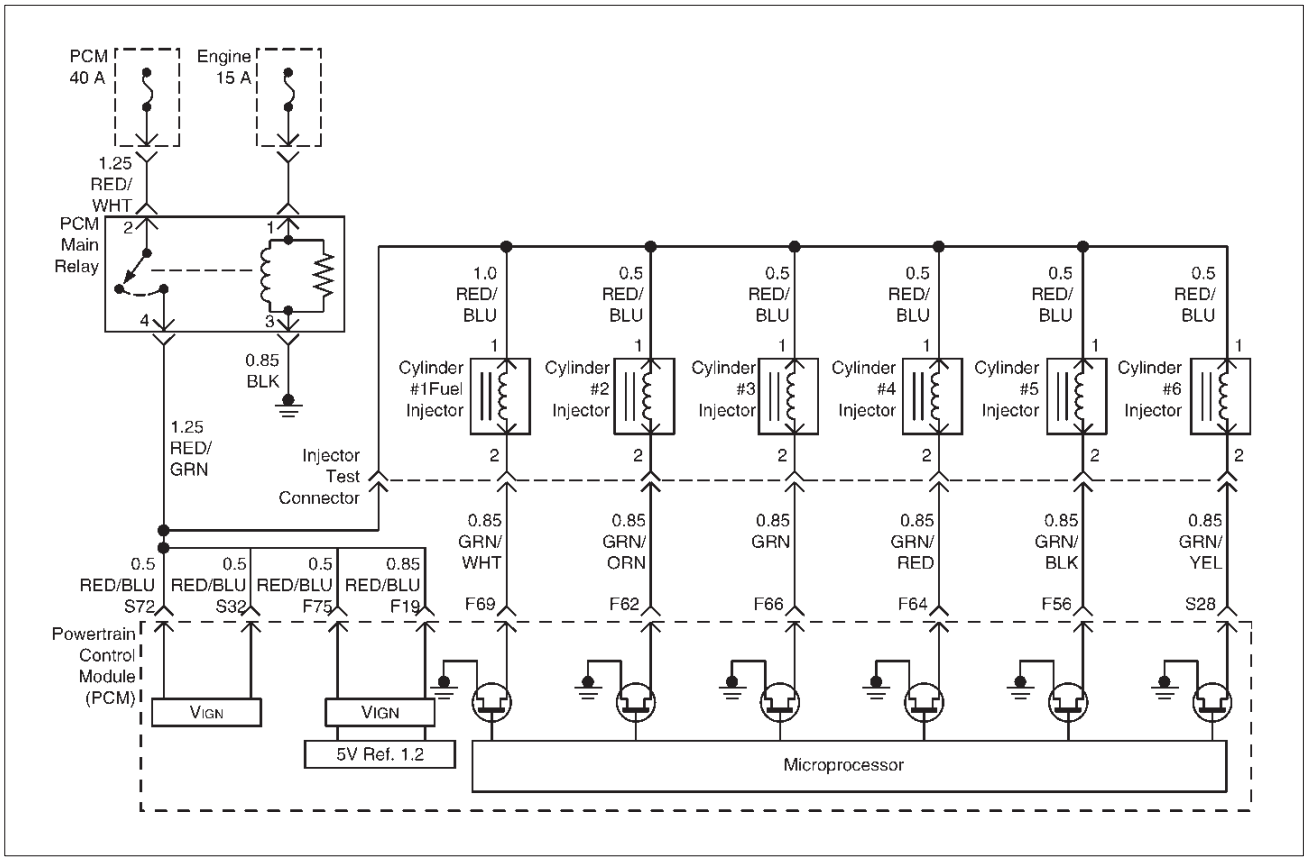

D06RY00086

Circuit Description

The powertrain control module (PCM) has six individual injector driver circuits. Each controls an injector. When the driver circuit is grounded by the PCM, the injector is activated. The PCM monitors the current in each driver circuit. The voltage on each driver is monitored to detect a fault. If the voltage is not what the PCM expects to monitor on the circuit, a DTC is set. This DTC is also set if an injector driver is shorted to voltage or if there is an open circuit.

Conditions for Setting the DTC

- The battery voltage is more than 9 volts.
- The engine is turning, determined by 58X crankshaft position input signal.
- The injector voltage does not equal the ignition voltage when the injector is commanded “OFF” or the injector voltage does not equal 0 volts when the injector is commanded “ON.”
- The above conditions are met for 15 seconds.

Action Taken When the DTC Sets

- The PCM will illuminate the malfunction indicator lamp (MIL) the first time the fault is detected.
- The PCM will store conditions which were present when the DTC was set as Freeze Frame and in the Failure Records data.

Conditions for Clearing the MIL/DTC

- The PCM will turn “OFF” the MIL on the third consecutive trip cycle in which the diagnostic has been run and the fault is no longer present.
- A history DTC P0206 will clear after 40 consecutive warm-up cycles occur without a fault.
- DTC P0206 can be cleared by using the Tech 2 “Clear Info” function or by disconnecting the PCM battery feed.

Diagnostic Aids

An injector driver circuit that is open or shorted to voltage will cause a DTC P0206 to set. It will also cause a misfire due to an inoperative injector. A misfire DTC will also be set indicating which cylinder is inoperative.
Long term and short term fuel trims that are excessively high or low are a good indication that an injector is faulty. Use Fuel Injector Coil Test Procedure to check for faulty injectors.

Test Description

The number(s) below refer to the step number(s) on the Diagnostic Chart.

3. This step determines if DTC P0206 is the result of a hard failure or an intermittent condition.

Downloaded from www.Manualslib.com manuals search engine

5. A special injector test connector is provided so that the injectors can be electrically tested without removal of the manifold.The test connector can be identified by the blue connector lock which is tethered to the wiring harness. If the light for cylinder 6 is “ON” steady before cranking the engine as well as while cranking the engine, then the injector driver circuit is shorted to ground.

   If the test light blinks while cranking, the PCM and the wiring to the injectors are OK. The Fuel Injector Coil Test Procedure will check if the injectors are faulty.

7. Because the test light was “ON” steady, voltage to the injector is OK, but the driver circuit is grounded at all times. This step determines if the circuit is shorted to ground or the PCM is faulty.

9. The reading should be about 12-14µ .

10. Locating the open in the harness or in the injector will require removal of the manifold to provide access.

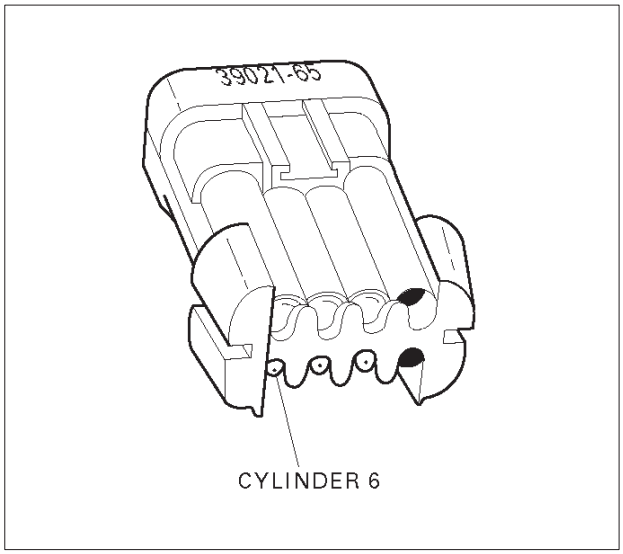

R321059

DTC P0206 – Injector 6 Control Circuit

Step	Action	Value(s)	Yes	No
1	Was the “On-Board Diagnostic (OBD) System Check” performed?	—	Go to *Step 2*	Go to *OBD System Check*
2	Will the engine start?	—	Go to *Step 3*	Go to *Engine Cranks But Will Not Run* chart
3	1. Install the Tech 2. Clear the DTC. 2. Idle the engine for one minute. Does DTC P0206 reset?	—	Go to *Step 5*	Go to *Step 4*
4	1. Review the Freeze Frame data with the ignition “ON” and the engine “OFF” and note the parameters. 2. Operate the vehicle within the Freeze Frame conditions as noted. Does P0206 reset?	—	Go to *Step 5*	Go to *Diagnostic Aids*

Downloaded from www.Manualslib.com manuals search engine

DTC P0206 – Injector 6 Control Circuit (Cont'd)

Step	Action	Value(s)	Yes	No
5	1. Engine "OFF." 2. Disconnect the injector test connector. 3. Install an injector test light J-39021-65 on injector connector. 4. Crank the engine and note the light. Does the cylinder 6 test light blink?	—	Go to *Fuel Injector Coil Test Procedure*	Go to *Step 6*
6	Note whether the injector test light for cylinder 6 was "OFF" or "ON" steady in step 5. Was the test light "ON" steady while cranking the engine?	—	Go to *Step 7*	Go to *Step 9*
7	1. Disconnect the PCM connector for the affected injectors. 2. With a test light connected to B+, probe the affected injector driver circuit. Does the test light illuminate?	—	Go to *Step 8*	Go to *Step 15*
8	Repair short to ground in the injector driver circuit. Is the action complete?	—	Go to *OBD System Check*	—
9	1. Disconnect the injector test connector. 2. At the injector side of the harness, connect an ohmmeter between the positive wire (red with blue tracer) and the wire for cylinder 6 (green with yellow tracer). Does the ohmmeter indicate continuity?	—	Go to *Step 11*	Go to *Step 10*
10	Repair the open injector harness wire or open injector Is the action complete?	—	Verify repair	—
11	At the PCM side of the injector test connector, check the green/yellow wire for a short to voltage. Was there a short to voltage?	—	Go to *Step 12*	Go to *Step 13*
12	Repair the short to voltage. Is the action complete?	—	Verify repair	—
13	Check for an open circuit between the injector test connector and the PCM. Was there an open circuit?	—	Go to *Step 14*	Go to *Step 15*
14	Repair the open circuit. Is the action complete?	—	Verify repair	—
15	Replace the PCM. **IMPORTANT:** The replacement PCM must be programmed. Refer to *On-Vehicle Service* in *Powertrain Control Module and Sensors* for procedures. And also refer to the latest Service Bulletin. Check to see if the Latest software is released or not. And then Down Load the LATEST PROGRAMMED SOFTWARE to the replacement PCM. Is the action complete?	—	Verify repair	—

Downloaded from www.Manualslib.com manuals search engine

Diagnostic Trouble Code (DTC) P0300 Engine Misfire Detected

Circuit Description

Misfire is monitored as a function of the combustion quality (CQ) signals generated from the ION Sensing Module system. Combustion signals represent the degree of combustion in each cylinder. Misfire is detected when the combustion signal is below a predetermined value.

This DTC P0300 will determine if a multiple cylinder misfire is occurring by monitoring the Combustion Quality.

Conditions for Setting the DTC

- None of the following DTCs occur: TP sensor, MAF sensor, VSS, ECT sensor.
- The engine speed is between 600 and 6250 RPM.
- The system voltage is between 11 and 16 volts.
- The engine temperature sensor (ECT) indicates an engine temperature between –7˚C (20˚F) and 120˚C (248˚F).
- Throttle angle is steady and throttle changes less than 15% per 125 milliseconds.

Action Taken When the DTC Sets

- The PCM will illuminate the malfunction indicator lamp (MIL) the first time the fault is detected.
- If the misfire is severe enough to cause possible catalyst damage, the PCM will flash the MIL for as long as the misfire remains at catalyst damaging levels.
- The PCM will disable the TCC operation.
- The PCM will store conditions which were present when the DTC was set as Freeze Frame and in the Failure Records data.

Conditions for Clearing the MIL/DTC

- The PCM will turn the MIL “OFF” on the third consecutive trip cycle in which the diagnostic has been run and the fault condition is no longer present.
- A history DTC P0300 will clear after 40 consecutive warm-up cycles occur without a fault.
- DTC P0300 can be cleared by using the Tech 2 “Clear Info” function or by disconnecting the PCM battery feed.

Diagnostic Aids

The Tech 2 display “Misfire Cur. #1 through #6” can be useful to determine whether the misfire is isolated to a single cylinder.

- Damaged or faulty ignition coil – Check for cracks or other damage.
- Substitute a known good coil – Swap the ignition coils and retest. If the misfire follows the coil, replace the ignition coil.

If the misfire is random, check for the following conditions:

- System grounds – Ensure all connections are clean and properly tightened.
- MAF – A mass air flow (MAF) sensor output that causes the PCM to sense a lower than normal air flow will cause a lean condition.
- Air induction system – Air leaks into the induction system which bypass the MAF sensor will cause a lean condition. Check for disconnected or damaged vacuum hoses, incorrectly installed or faulty PCV valve, or for vacuum leaks at the throttle body, EGR valve, and intake manifold mounting surfaces.
- Fuel pressure – Perform a fuel system pressure test. A faulty fuel pump, plugged filter, or faulty fuel system pressure regulator will contribute to a lean condition.
- Injector(s) – Perform an injector coil/balance test to locate faulty injector(s) contributing to a lean or flooding condition. In addition to the above test, check the condition of the injector O-rings.
- EGR – Check for a leaking valve, adapter, or feed pipes which will contribute to a lean condition or excessive EGR flow.
- Fuel quality – Using fuel with the wrong octane rating for the vehicle may cause driveability problems. Although alcohol-enhanced fuels may raise the octane rating, the fuel’s ability to turn into vapor in cold temperatures deteriorates. This may affect the cold driveability of the engine. The Reid Vapor Pressure of the fuel can also create problems in the fuel system, especially during the spring and fall when changes by the refineries may not coincide with changes in the weather.
- Vehicle marshalling – The transportation of new vehicles from the assembly plant to the dealership can involve as many as 60 key cycles within 2 to 3 miles of driving. This type of operation contributes to the fuel fouling of the spark plugs and will turn on the MIL with a P0300 Misfire DTC.

Reviewing the Failure Records vehicle mileage since the diagnostic test last failed may help determine how often the condition that caused the DTC to be set occurs. This may assist in diagnosing the condition.

Downloaded from www.Manualslib.com manuals search engine

DTC P0300 – Engine Misfire Detected

Step	Action	Value(s)	Yes	No
1	Was the “On-Board Diagnostic (OBD) System Check” performed?	—	Go to *Step 2*	Go to *OBD System Check*
2	1. Start the engine. Run the engine at idle. 2. Review and record the Tech 2 Freeze Frame data. 3. Operate the vehicle to duplicate the conditions present when the DTC was set (as defined by the Freeze Frame data). 4. Monitor the Tech 2 “Misfire Cur. #” display for each cylinder. Is “Misfire Cur. #” display increasing for any cylinder (indicating a misfire currently occurring)?	—	Go to *Step 3*	Refer to *Diagnostic Aids*
3	1. Visually and physically inspect the vacuum hoses for splits, kinks, and improper connections. 2. If a problem is found, repair or replace the vacuum hoses as necessary. Did your inspection reveal a problem?	—	Verify repair	Go to *Step 4*
4	1. Visually and physically inspect the following areas for vacuum leaks: • The intake manifold • The injector O-rings • The EGR adapter • The EGR feed pipes • ION Sensing Module 2. If a problem is found, repair the vacuum leak as necessary. Did your inspection reveal a vacuum leak?	—	Verify repair	Go to *Step 5*
5	1. Visually and physically inspect the crankcase ventilation valve for improper installation or damaged grommet. 2. If a problem is found, repair as necessary (refer to *Crankcase Ventilation System*). Did your inspection reveal a problem?	—	Verify repair	Go to *Step 6*
6	1. Inspect the MAF sensor inlet screen for damage or for the presence of foreign objects that may partially block the air flow sample through the MAF sensor. 2. If a problem is found, repair or replace the MAF sensor as necessary. Did your inspection of the MAF sensor reveal a condition requiring repair or replacement?	—	Verify repair	Go to *Step 7*
7	1. Remove the EGR valve and visually/physically inspect the valve to ensure that the pintle is not sticking partially open. Also, inspect the EGR valve pintle and seat for carbon deposits or burrs that may interfere with the pintle closing completely. 2. If a problem is found, clean the EGR valve pintle and seat or replace the EGR valve as necessary. Did your inspection reveal a problem?	—	Verify repair	Go to *Step 8*

Downloaded from www.Manualslib.com manuals search engine

DTC P0300 – Engine Misfire Detected (Cont'd)

Step	Action	Value(s)	Yes	No
8	1. Install a spark tester at the spark plug end of the ignition coil for a cylinder that indicated a misfire. 2. Crank the engine while observing the spark tester. A crisp, blue spark should be observed. Is adequate spark present?	—	Go to *Step 14*	Go to *Step 9*
9	1. Remove and visually/physically inspect the ignition coil(s) associated with the cylinders that were indicated as misfiring. Ensure that the coil(s) are free of cracks. 2. If a problem is found, replace the damaged ignition coil(s) as necessary. Did any ignition coils require replacement?	—	Verify repair	Go to *Step 10*
10	1. Remove the spark plugs from the cylinders that were indicated as misfiring. 2. Visually inspect the spark plug electrodes. Does your inspection reveal any spark plugs exhibiting excessive fouling?	—	Go to *Engine Mechanical Diagnosis*	Go to *Step 11*
11	1. Visually inspect the spark plug insulators for cracks, carbon tracking, or other damage. 2. If a problem is found, replace the faulty spark plug(s) as necessary. Did your inspection reveal a problem?	—	Verify repair	Go to *Step 12*
12	1. Disconnect the MAF sensor electrical connector. 2. Operate the vehicle in "closed loop" while monitoring the "BANK 1 L.T. FUEL TRIM" and "BANK 1 S.T. FUEL TRIM" display on the Tech 2. Do both values decrease below the specified values?	"BANK 1 L.T. FUEL TRIM" below +20%; "BANK 1 S.T. FUEL TRIM" below +50%	Go to *Step 13*	Replace the ignition coil of the affected cylinder
13	Replace the ignition coil control module. Is the action complete?	—	Verify repair	—
14	1. Visually and physically inspect the PCM injector grounds, power grounds and sensor grounds to ensure that they are clean, tight and in their proper locations. 2. If a problem is found, correct the faulty ground condition as necessary. Did your inspection reveal a poor ground?	—	Verify repair	Go to *Step 15*
15	1. Perform the "Fuel System Pressure Test" procedure. 2. If a problem is found, repair as necessary (refer to *Engine Fuel or Fuel Metering System*). Was a fuel system problem found?	—	Verify repair	Go to *Step 16*
16	1. Check the fuel for excessive water, alcohol, or other contaminants (refer to *Diagnosis* in *Engine Fuel* for procedure). 2. If a problem is found, correct the contaminated fuel condition as necessary. Was the fuel contaminated?	—	Verify repair	Go to *Step 17*

Downloaded from www.Manualslib.com manuals search engine

DTC P0300 – Engine Misfire Detected (Cont'd)

Step	Action	Value(s)	Yes	No
17	1. Perform the "Injector Coil/Balance Test." 2. If a problem is found, replace faulty injector(s) as necessary. Did any of the injectors require replacement?	—	Verify repair	Go to *Step 18*
18	1. Check for an engine mechanical problem. Refer to *Engine Mechanical Diagnosis* to diagnose the following conditions: ● A faulty or incorrect camshaft ● Leaking or sticky valves or rings ● Excessive valve deposits ● Weak valve springs ● Incorrect valve timing ● A leaking head gasket ● A loose or broken motor mount 2. If a problem is found, repair as necessary. Was a basic engine mechanical problem found and repaired?	—	Verify repair	Go to *Step 19*
19	1. Check for a transmission TCC problem. Refer to *4L30-E Automatic Transmission Diagnosis*. 2. If a problem is found, repair the transmission as necessary. Refer to *4L30-E Automatic Transmission Unit Repair*. Was a transmission problem found and repaired?	—	Verify repair	Go to *Step 20*
20	Replace the MAF sensor. Is the action complete?	—	Verify repair	—

Downloaded from www.Manualslib.com manuals search engine

Diagnostic Trouble Code (DTC) P0301 Cylinder Misfire Detected

Circuit Description

Misfire is monitored as a function of the combustion quality (CQ) signals generated from the ignition current sense system. Combustion signals represent the degree of combustion in each cylinder. Misfire is detected when the combustion signal is below a predetermined value. This DTC P0301 will determine if the No.1 cylinder misfire is occurring by monitoring the Combustion Quality.

Conditions for Setting the DTC

- None of the following DTCs occur: TP sensor, MAF sensor, vehicle speed sensor, ECT sensor.
- The engine speed is between 600 and 6250 RPM.
- The system voltage is between 11 and 16 volts.
- The ECT indicates an engine temperature between –7˚C (28˚F) and 120˚C (248˚F).
- The throttle angle is steady.

Action Taken When the DTC Sets

- The PCM will illuminate the malfunction indicator lamp (MIL) the first time the fault is detected.
- If the misfire is severe enough to cause possible catalyst damage, the PCM will flash the MIL for as long as the misfire remains at catalyst damaging levels.
- The PCM will store conditions which were present when the DTC was set as Freeze Frame and in the Failure Records data.

Conditions for Clearing the MIL/DTC

- The PCM will turn the MIL “OFF” on the third consecutive ignition cycle in which the diagnostic has been run and the fault condition is no longer present.
- A history DTC P0301 will clear after 40 consecutive ignition cycles occur without a fault.
- DTC P0301 can be cleared by using the Tech 2 “Clear Info” function or by disconnecting the PCM battery feed.

Diagnostic Aids

Check for the following conditions:

- System grounds – Ensure all connections are clean and properly tightened.
- Injector – Perform the injector coil/balance test to locate a faulty injector that contributes to a lean condition on the affected cylinder. In addition to the above test, check the condition of the injector O-ring.
- Faulty spark plug – Check for a cracked insulator, carbon tracking, incorrect gap, and worn electrodes.
- Damaged or faulty ignition coil – Check for cracks or other damage.
- Substitute a known good coil – Swap the ignition coils and retest. If the misfire follows the coil, replace the ignition coil.

DTC P0301 – Cylinder Misfire Detected

Step	Action	Value(s)	Yes	No
1	Was the “On-Board Diagnostic (OBD) System Check” performed?	—	Go to *Step 2*	Go to *OBD System Check*
2	1. Start the engine. Run the engine at idle. 2. Review and record Tech 2 Freeze Frame data. 3. Monitor “Misfire Cur. #1” on the Tech 2. Is “Misfire Cur. #1” increasing (indicating a misfire currently occurring)?	—	Go to *Step 4*	Go to *Step 3*
3	Monitor “Misfire Hist. #1” while operating the vehicle to duplicate the conditions present when the DTC was set (as defined by the Freeze Frame data recorded in Step 2). Is “Misfire Hist. #1” increasing (indicating a misfire currently occurring)?	—	Go to *Step 4*	Refer to *Diagnostic Aids*
4	1. Visually and physically inspect the vacuum hoses for splits, kinks, and improper connections. Also, inspect the intake manifold for a vacuum leak. 2. If a problem is found, repair it as necessary. Did the inspection reveal a problem?	—	Verify repair	Go to *Step 5*
5	1. Install a spark tester at the spark plug end of the cylinder #1 ignition coil. 2. Crank the engine while observing the spark tester. A crisp, blue spark should be observed. Is adequate spark present?	—	Go to *Step 8*	Go to *Step 6*

Downloaded from www.Manualslib.com manuals search engine

DTC P0301 – Cylinder Misfire Detected (Cont'd)

Step	Action	Value(s)	Yes	No
6	1. Remove and visually/physically inspect the ignition coil associated with cylinder #1. Ensure that the coil is free of cracks and carbon tracking. 2. If a problem is found, replace the damaged ignition coil as necessary. Did the visual inspection reveal a problem?	—	Verify repair	Go to *Step 7*
7	1. Measure the ignition coil primary resistance. 2. If resistance is not within the specified value, replace the faulty ignition coil. Did the ignition coil require replacement?	2.6-2.7 Kμ	Verify repair	Go to *Step 12*
8	Remove the cylinder #1 spark plug and visually inspect the spark plug electrode. Does the inspection reveal excessive fouling?	—	Go to *Contaminatio n Diagnosis* chart in *Engine Mechanical Diagnosis*	Go to *Step 9*
9	1. Visually inspect the spark plug insulator for cracks, carbon tracking, or other damage. 2. If the spark plug is damaged, replace the spark plug. Did the inspection reveal a problem?	—	Verify repair	Go to *Step 10*
10	1. Perform the "Injector Coil/Balance Test." 2. If any faulty injectors are found, replace them as necessary. Did any of the injectors require replacement?	—	Verify repair	Go to *Step 11*
11	1. Inspect the injector O-rings for a vacuum leak. 2. If a problem is found, repair it as necessary. Did the inspection reveal a problem?	—	Verify repair	Go to *Step 12*
12	Check for an engine mechanical problem. Refer to *Engine Mechanical Diagnosis* to diagnose and repair the following conditions: • A faulty or incorrect camshaft • Leaking or sticky valves or rings • Excessive valve deposits • Weak valve springs • A leaking head gasket Was a basic engine mechanical problem found?	—	Verify repair	Refer to *Diagnostic Aids*

Downloaded from www.Manualslib.com manuals search engine

Diagnostic Trouble Code (DTC) P0302 Cylinder Misfire Detected

Circuit Description

Misfire is monitored as a function of the combustion quality (CQ) signals generated from the ignition current sense system. Combustion signals represent the degree of combustion in each cylinder. Misfire is detected when the combustion signal is below a predetermined value. This DTC P0302 will determine if the No.2 cylinder misfire is occurring by monitoring the Combustion Quality.

Conditions for Setting the DTC

- None of the following DTCs occur: TP sensor, MAF sensor, vehicle speed sensor, ECT sensor.
- The engine speed is between 600 and 6250 RPM.
- The system voltage is between 11 and 16 volts.
- The ECT indicates an engine temperature between –7˚C (28˚F) and 120˚C (248˚F).
- The throttle angle is steady.

Action Taken When the DTC Sets

- The PCM will illuminate the malfunction indicator lamp (MIL) the first time the fault is detected.
- If the misfire is severe enough to cause possible catalyst damage, the PCM will flash the MIL for as long as the misfire remains at catalyst damaging levels.
- The PCM will store conditions which were present when the DTC was set as Freeze Frame and in the Failure Records data.

Conditions for Clearing the MIL/DTC

- The PCM will turn the MIL “OFF” on the third consecutive ignition cycle in which the diagnostic has been run and the fault condition is no longer present.
- A history DTC P0302 will clear after 40 consecutive ignition cycles occur without a fault.
- DTC P0302 can be cleared by using the Tech 2 “Clear Info” function or by disconnecting the PCM battery feed.

Diagnostic Aids

Check for the following conditions:

- System grounds – Ensure all connections are clean and properly tightened.
- Injector – Perform the injector coil/balance test to locate a faulty injector that contributes to a lean condition on the affected cylinder. In addition to the above test, check the condition of the injector O-ring.
- Faulty spark plug – Check for a cracked insulator, carbon tracking, incorrect gap, and worn electrodes.
- Damaged or faulty ignition coil – Check for cracks, carbon tracking or other damage.
- Substitute a known good coil – Swap the ignition coils and retest. If the misfire follows the coil, replace the ignition coil.

DTC P0302 – Cylinder Misfire Detected

Step	Action	Value(s)	Yes	No
1	Was the “On-Board Diagnostic (OBD) System Check” performed?	—	Go to *Step 2*	Go to *OBD System Check*
2	1. Start the engine. Run the engine at idle. 2. Review and record Tech 2 Freeze Frame data. 3. Monitor “Misfire Cur. #2” on the Tech 2. Is “Misfire Cur. #2” increasing (indicating a misfire currently occurring)?	—	Go to *Step 4*	Go to *Step 3*
3	Monitor “Misfire Hist. #2” while operating the vehicle to duplicate the conditions present when the DTC was set (as defined by the Freeze Frame data recorded in Step 2). Is “Misfire Hist. #2” increasing (indicating a misfire currently occurring)?	—	Go to *Step 4*	Refer to *Diagnostic Aids*
4	1. Visually and physically inspect the vacuum hoses for splits, kinks, and improper connections. Also, inspect the intake manifold for a vacuum leak. 2. If a problem is found, repair it as necessary. Did the inspection reveal a problem?	—	Verify repair	Go to *Step 5*
5	1. Install a spark tester at the spark plug end of the cylinder #2 ignition coil. 2. Crank the engine while observing the spark tester. A crisp, blue spark should be observed. Is adequate spark present?	—	Go to *Step 8*	Go to *Step 6*

Downloaded from www.Manualslib.com manuals search engine

DTC P0302 – Cylinder Misfire Detected (Cont'd)

Step	Action	Value(s)	Yes	No
6	1. Remove and visually/physically inspect the ignition coil associated with cylinder #2. Ensure that the coil is free of cracks and carbon tracking. 2. If a problem is found, replace the damaged ignition coil as necessary. Did the visual inspection reveal a problem?	—	Verify repair	Go to *Step 7*
7	1. Measure the ignition coil primary resistance. 2. If resistance is not within the specified value, replace the faulty ignition coil. Did the ignition coil require replacement?	2.6-2.7 Kμ	Verify repair	Go to *Step 12*
8	Remove the cylinder #2 spark plug and visually inspect the spark plug electrode. Does the inspection reveal excessive fouling?	—	Go to *Contamination Diagnosis* chart in *Engine Mechanical Diagnosis*	Go to *Step 9*
9	1. Visually inspect the spark plug insulator for cracks, carbon tracking, or other damage. 2. If the spark plug is damaged, replace the spark plug. Did the inspection reveal a problem?	—	Verify repair	Go to *Step 10*
10	1. Perform the "Injector Coil/Balance Test." 2. If any faulty injectors are found, replace them as necessary. Did any of the injectors require replacement?	—	Verify repair	Go to *Step 11*
11	1. Inspect the injector O-rings for a vacuum leak. 2. If a problem is found, repair it as necessary. Did the inspection reveal a problem?	—	Verify repair	Go to *Step 12*
12	Check for an engine mechanical problem. Refer to *Engine Mechanical Diagnosis* to diagnose and repair the following conditions: • A faulty or incorrect camshaft • Leaking or sticky valves or rings • Excessive valve deposits • Weak valve springs • A leaking head gasket Was a basic engine mechanical problem found?	—	Verify repair	Refer to *Diagnostic Aids*

Downloaded from www.Manualslib.com manuals search engine

Diagnostic Trouble Code (DTC) P0303 Cylinder Misfire Detected

Circuit Description

Misfire is monitored as a function of the combustion quality (CQ) signals generated from the ignition current sense system. Combustion signals represent the degree of combustion in each cylinder. Misfire is detected when the combustion signal is below a predetermined value. This DTC P0303 will determine if the No.3 cylinder misfire is occurring by monitoring the Combustion Quality.

Conditions for Setting the DTC

- None of the following DTCs occur: TP sensor, MAF sensor, vehicle speed sensor, ECT sensor.
- The engine speed is between 600 and 6250 RPM.
- The system voltage is between 11 and 16 volts.
- The ECT indicates an engine temperature between –7˚C (28˚F) and 120˚C (248˚F).
- The throttle angle is steady.

Action Taken When the DTC Sets

- The PCM will illuminate the malfunction indicator lamp (MIL) the first time the fault is detected.
- If the misfire is severe enough to cause possible catalyst damage, the PCM will flash the MIL for as long as the misfire remains at catalyst damaging levels.
- The PCM will store conditions which were present when the DTC was set as Freeze Frame and in the Failure Records data.

Conditions for Clearing the MIL/DTC

- The PCM will turn the MIL “OFF” on the third consecutive ignition cycle in which the diagnostic has been run and the fault condition is no longer present.
- A history DTC P0303 will clear after 40 consecutive ignition cycles occur without a fault.
- DTC P0303 can be cleared by using the Tech 2 “Clear Info” function or by disconnecting the PCM battery feed.

Diagnostic Aids

Check for the following conditions:

- System grounds – Ensure all connections are clean and properly tightened.
- Injector — Perform the injector coil/balance test to locate a faulty injector that contributes to a lean condition on the affected cylinder. In addition to the above test, check the condition of the injector O-ring.
- Faulty spark plug – Check for a cracked insulator, carbon tracking, incorrect gap, and worn electrodes.
- Damaged or faulty ignition coil – Check for cracks, carbon tracking or other damage.
- Substitute a known good coil – Swap the ignition coils and retest. If the misfire follows the coil, replace the ignition coil.

DTC P0303 – Cylinder Misfire Detected

Step	Action	Value(s)	Yes	No
1	Was the “On-Board Diagnostic (OBD) System Check” performed?	—	Go to *Step 2*	Go to *OBD System Check*
2	1. Start the engine. Run the engine at idle. 2. Review and record Tech 2 Freeze Frame data. 3. Monitor “Misfire Cur. #3” on the Tech 2. Is “Misfire Cur. #3” increasing (indicating a misfire currently occurring)?	—	Go to *Step 4*	Go to *Step 3*
3	Monitor “Misfire Hist. #3” while operating the vehicle to duplicate the conditions present when the DTC was set (as defined by the Freeze Frame data recorded in Step 2). Is “Misfire Hist. #3” increasing (indicating a misfire currently occurring)?	—	Go to *Step 4*	Refer to *Diagnostic Aids*
4	1. Visually and physically inspect the vacuum hoses for splits, kinks, and improper connections. Also, inspect the intake manifold for a vacuum leak. 2. If a problem is found, repair it as necessary. Did the inspection reveal a problem?	—	Verify repair	Go to *Step 5*
5	1. Install a spark tester at the spark plug end of the cylinder #3 ignition coil. 2. Crank the engine while observing the spark tester. A crisp, blue spark should be observed. Is adequate spark present?	—	Go to *Step 8*	Go to *Step 6*

Downloaded from www.Manualslib.com manuals search engine

DTC P0303 – Cylinder Misfire Detected (Cont'd)

Step	Action	Value(s)	Yes	No
6	1. Remove and visually/physically inspect the ignition coil associated with cylinder #3. Ensure that the coil is free of cracks and carbon tracking. 2. If a problem is found, replace the damaged ignition coil as necessary. Did the visual inspection reveal a problem?	—	Verify repair	Go to *Step 7*
7	1. Measure the ignition coil primary resistance. 2. If resistance is not within the specified value, replace the faulty ignition coil. Did the ignition coil require replacement?	2.6-2.7 Kμ	Verify repair	Go to *Step 12*
8	Remove the cylinder #3 spark plug and visually inspect the spark plug electrode. Does the inspection reveal excessive fouling?	—	Go to *Contaminatio n Diagnosis* chart in *Engine Mechanical Diagnosis*	Go to *Step 9*
9	1. Visually inspect the spark plug insulator for cracks, carbon tracking, or other damage. 2. If the spark plug is damaged, replace the spark plug. Did the inspection reveal a problem?	—	Verify repair	Go to *Step 10*
10	1. Perform the "Injector Coil/Balance Test." 2. If any faulty injectors are found, replace them as necessary. Did any of the injectors require replacement?	—	Verify repair	Go to *Step 11*
11	1. Inspect the injector O-rings for a vacuum leak. 2. If a problem is found, repair it as necessary. Did the inspection reveal a problem?	—	Verify repair	Go to *Step 12*
12	Check for an engine mechanical problem. Refer to *Engine Mechanical Diagnosis* to diagnose and repair the following conditions: • A faulty or incorrect camshaft • Leaking or sticky valves or rings • Excessive valve deposits • Weak valve springs • A leaking head gasket Was a basic engine mechanical problem found?	—	Verify repair	Refer to *Diagnostic Aids*

Downloaded from www.Manualslib.com manuals search engine

Diagnostic Trouble Code (DTC) P0304 Cylinder Misfire Detected

Circuit Description

Misfire is monitored as a function of the combustion quality (CQ) signals generated from the ignition current sense system. Combustion signals represent the degree of combustion in each cylinder. Misfire is detected when the combustion signal is below a predetermined value. This DTC P0304 will determine if the No.4 cylinder misfire is occurring by monitoring the Combustion Quality.

Conditions for Setting the DTC

- None of the following DTCs occur: TP sensor, MAF sensor, vehicle speed sensor, ECT sensor.
- The engine speed is between 600 and 6250 RPM.
- The system voltage is between 11 and 16 volts.
- The ECT indicates an engine temperature between –7˚C (28˚F) and 120˚C (248˚F).
- The throttle angle is steady.

Action Taken When the DTC Sets

- The PCM will illuminate the malfunction indicator lamp (MIL) the first time the fault is detected.
- If the misfire is severe enough to cause possible catalyst damage, the PCM will flash the MIL for as long as the misfire remains at catalyst damaging levels.
- The PCM will store conditions which were present when the DTC was set as Freeze Frame and in the Failure Records data.

Conditions for Clearing the MIL/DTC

- The PCM will turn the MIL “OFF” on the third consecutive ignition cycle in which the diagnostic has been run and the fault condition is no longer present.
- A history DTC P0304 will clear after 40 consecutive ignition cycles occur without a fault.
- DTC P0304 can be cleared by using the Tech 2 “Clear Info” function or by disconnecting the PCM battery feed.

Diagnostic Aids

Check for the following conditions:

- System grounds – Ensure all connections are clean and properly tightened.
- Injector – Perform the injector coil/balance test to locate a faulty injector that contributes to a lean condition on the affected cylinder. In addition to the above test, check the condition of the injector O-ring.
- Faulty spark plug – Check for a cracked insulator, carbon tracking, incorrect gap, and worn electrodes.
- Damaged or faulty ignition coil – Check for cracks, carbon tracking or other damage.
- Substitute a known good coil – Swap the ignition coils and retest. If the misfire follows the coil, replace the ignition coil.

DTC P0304 – Cylinder Misfire Detected

Step	Action	Value(s)	Yes	No
1	Was the “On-Board Diagnostic (OBD) System Check” performed?	—	Go to *Step 2*	Go to *OBD System Check*
2	1. Start the engine. Run the engine at idle. 2. Review and record Tech 2 Freeze Frame data. 3. Monitor “Misfire Cur. #4” on the Tech 2. Is “Misfire Cur. #4” increasing (indicating a misfire currently occurring)?	—	Go to *Step 4*	Go to *Step 3*
3	Monitor “Misfire Hist. #4” while operating the vehicle to duplicate the conditions present when the DTC was set (as defined by the Freeze Frame data recorded in Step 2). Is “Misfire Hist. #4” increasing (indicating a misfire currently occurring)?	—	Go to *Step 4*	Refer to *Diagnostic Aids*
4	1. Visually and physically inspect the vacuum hoses for splits, kinks, and improper connections. Also, inspect the intake manifold for a vacuum leak. 2. If a problem is found, repair it as necessary. Did the inspection reveal a problem?	—	Verify repair	Go to *Step 5*
5	1. Install a spark tester at the spark plug end of the cylinder #4 ignition wire. 2. Crank the engine while observing the spark tester. A crisp, blue spark should be observed. Is adequate spark present?	—	Go to *Step 8*	Go to *Step 6*

Downloaded from www.Manualslib.com manuals search engine

DTC P0304 – Cylinder Misfire Detected (Cont'd)

Step	Action	Value(s)	Yes	No
6	1. Remove and visually/physically inspect the ignition coil associated with cylinder #4. Ensure that the coil is free of cracks and carbon tracking. 2. If a problem is found, replace the damaged ignition coil as necessary. Did the visual inspection reveal a problem?	—	Verify repair	Go to *Step 7*
7	1. Measure the ignition coil primary resistance. 2. If resistance is not within the specified value, replace the faulty ignition coil. Did the ignition coil require replacement?	2.6-2.7 Kμ	Verify repair	Go to *Step 12*
8	Remove the cylinder #4 spark plug and visually inspect the spark plug electrode. Does the inspection reveal excessive fouling?	—	Go to *Contaminatio n Diagnosis* chart in *Engine Mechanical Diagnosis*	Go to *Step 9*
9	1. Visually inspect the spark plug insulator for cracks, carbon tracking, or other damage. 2. If the spark plug is damaged, replace the spark plug. Did the inspection reveal a problem?	—	Verify repair	Go to *Step 10*
10	1. Perform the "Injector Coil/Balance Test." 2. If any faulty injectors are found, replace them as necessary. Did any of the injectors require replacement?	—	Verify repair	Go to *Step 11*
11	1. Inspect the injector O-rings for a vacuum leak. 2. If a problem is found, repair it as necessary. Did the inspection reveal a problem?	—	Verify repair	Go to *Step 12*
12	Check for an engine mechanical problem. Refer to *Engine Mechanical Diagnosis* to diagnose and repair the following conditions: • A faulty or incorrect camshaft • Leaking or sticky valves or rings • Excessive valve deposits • Weak valve springs • A leaking head gasket Was a basic engine mechanical problem found?	—	Verify repair	Refer to *Diagnostic Aids*

Downloaded from www.Manualslib.com manuals search engine

Diagnostic Trouble Code (DTC) P0305 Cylinder Misfire Detected

Circuit Description

Misfire is monitored as a function of the combustion quality (CQ) signals generated from the ignition current sense system. Combustion signals represent the degree of combustion in each cylinder. Misfire is detected when the combustion signal is below a predetermined value. This DTC P0305 will determine if the No.5 cylinder misfire is occurring by monitoring the Combustion Quality.

Conditions for Setting the DTC

- None of the following DTCs occur: TP sensor, MAF sensor, vehicle speed sensor, ECT sensor.
- The engine speed is between 600 and 6250 RPM.
- The system voltage is between 11 and 16 volts.
- The ECT indicates an engine temperature between –7˚C (28˚F) and 120˚C (248˚F).
- The throttle angle is steady.

Action Taken When the DTC Sets

- The PCM will illuminate the malfunction indicator lamp (MIL) the first time the fault is detected.
- If the misfire is severe enough to cause possible catalyst damage, the PCM will flash the MIL for as long as the misfire remains at catalyst damaging levels.
- The PCM will store conditions which were present when the DTC was set as Freeze Frame and in the Failure Records data.

Conditions for Clearing the MIL/DTC

- The PCM will turn the MIL “OFF” on the third consecutive ignition cycle in which the diagnostic has been run and the fault condition is no longer present.
- A history DTC P0305 will clear after 40 consecutive ignition cycles occur without a fault.
- DTC P0305 can be cleared by using the Tech 2 “Clear Info” function or by disconnecting the PCM battery feed.

Diagnostic Aids

Check for the following conditions:

- System grounds – Ensure all connections are clean and properly tightened.
- Injector – Perform the injector coil/balance test to locate a faulty injector that contributes to a lean condition on the affected cylinder. In addition to the above test, check the condition of the injector O-ring.
- Faulty spark plug – Check for a cracked insulator, carbon tracking, incorrect gap, and worn electrodes.
- Damaged or faulty ignition coil – Check for cracks, carbon tracking or other damage.
- Substitute a known good coil – Swap the ignition coils and retest. If the misfire follows the coil, replace the ignition coil.

DTC P0305 – Cylinder Misfire Detected

Step	Action	Value(s)	Yes	No
1	Was the “On-Board Diagnostic (OBD) System Check” performed?	—	Go to *Step 2*	Go to *OBD System Check*
2	1. Start the engine. Run the engine at idle. 2. Review and record Tech 2 Freeze Frame data. 3. Monitor “Misfire Cur. #5” on the Tech 2. Is “Misfire Cur. #5” increasing (indicating a misfire currently occurring)?	—	Go to *Step 4*	Go to *Step 3*
3	Monitor “Misfire Hist. #5” while operating the vehicle to duplicate the conditions present when the DTC was set (as defined by the Freeze Frame data recorded in Step 2). Is “Misfire Hist. #5” increasing (indicating a misfire currently occurring)?	—	Go to *Step 4*	Refer to *Diagnostic Aids*
4	1. Visually and physically inspect the vacuum hoses for splits, kinks, and improper connections. Also, inspect the intake manifold for a vacuum leak. 2. If a problem is found, repair it as necessary. Did the inspection reveal a problem?	—	Verify repair	Go to *Step 5*
5	1. Install a spark tester at the spark plug end of the cylinder #5 ignition wire. 2. Crank the engine while observing the spark tester. A crisp, blue spark should be observed. Is adequate spark present?	—	Go to *Step 8*	Go to *Step 6*

Downloaded from www.Manualslib.com manuals search engine

DTC P0305 – Cylinder Misfire Detected (Cont'd)

Step	Action	Value(s)	Yes	No
6	1. Remove and visually/physically inspect the ignition coil associated with cylinder #5. Ensure that the coil is free of cracks and carbon tracking. 2. If a problem is found, replace the damaged ignition coil as necessary. Did the visual inspection reveal a problem?	—	Verify repair	Go to *Step 7*
7	1. Measure the ignition coil primary resistance. 2. If resistance is not within the specified value, replace the faulty ignition coil. Did the ignition coil require replacement?	2.6-2.7 Kμ	Verify repair	Go to *Step 12*
8	Remove the cylinder #5 spark plug and visually inspect the spark plug electrode. Does the inspection reveal excessive fouling?	—	Go to *Contaminatio n Diagnosis* chart in *Engine Mechanical Diagnosis*	Go to *Step 9*
9	1. Visually inspect the spark plug insulator for cracks, carbon tracking, or other damage. 2. If the spark plug is damaged, replace the spark plug. Did the inspection reveal a problem?	—	Verify repair	Go to *Step 10*
10	1. Perform the "Injector Coil/Balance Test." 2. If any faulty injectors are found, replace them as necessary. Did any of the injectors require replacement?	—	Verify repair	Go to *Step 11*
11	1. Inspect the injector O-rings for a vacuum leak. 2. If a problem is found, repair it as necessary. Did the inspection reveal a problem?	—	Verify repair	Go to *Step 12*
12	Check for an engine mechanical problem. Refer to *Engine Mechanical Diagnosis* to diagnose and repair the following conditions: • A faulty or incorrect camshaft • Leaking or sticky valves or rings • Excessive valve deposits • Weak valve springs • A leaking head gasket Was a basic engine mechanical problem found?	—	Verify repair	Refer to *Diagnostic Aids*

Downloaded from www.Manualslib.com manuals search engine

Diagnostic Trouble Code (DTC) P0306 Cylinder Misfire Detected

Circuit Description

Misfire is monitored as a function of the combustion quality (CQ) signals generated from the ignition current sense system. Combustion signals represent the degree of combustion in each cylinder. Misfire is detected when the combustion signal is below a predetermined value. This DTC P0306 will determine if the No.6 cylinder misfire is occurring by monitoring the Combustion Quality.

Conditions for Setting the DTC

- None of the following occur: TP sensor, MAF sensor, vehicle speed sensor, ECT sensor.
- The engine speed is between 600 and 6250 RPM.
- The system voltage is between 11 and 16 volts.
- The ECT indicates an engine temperature between –7˚C (28˚F) and 120˚C (248˚F).
- The throttle angle is steady.

Action Taken When the DTC Sets

- The PCM will illuminate the malfunction indicator lamp (MIL) the first time the fault is detected.
- If the misfire is severe enough to cause possible catalyst damage, the PCM will flash the MIL for as long as the misfire remains at catalyst damaging levels.
- The PCM will store conditions which were present when the DTC was set as Freeze Frame and in the Failure Records data.

Conditions for Clearing the MIL/DTC

- The PCM will turn the MIL “OFF” on the third consecutive ignition cycle in which the diagnostic has been run and the fault condition is no longer present.
- A history DTC P0306 will clear after 40 consecutive ignition cycles occur without a fault.
- DTC P0306 can be cleared by using the Tech 2 “Clear Info” function or by disconnecting the PCM battery feed.

Diagnostic Aids

Check for the following conditions:

- System grounds – Ensure all connections are clean and properly tightened.
- Injector – Perform the injector coil/balance test to locate a faulty injector that contributes to a lean condition on the affected cylinder. In addition to the above test, check the condition of the injector O-ring.
- Faulty spark plug – Check for a cracked insulator, carbon tracking, incorrect gap, and worn electrodes.
- Damaged or faulty ignition coil – Check for cracks or other damage.
- Substitute a known good coil – Swap the ignition coils and retest. If the misfire follows the coil, replace the ignition coil.

DTC P0306 – Cylinder Misfire Detected

Step	Action	Value(s)	Yes	No
1	Was the “On-Board Diagnostic (OBD) System Check” performed?	—	Go to *Step 2*	Go to *OBD System Check*
2	1. Start the engine. Run the engine at idle. 2. Review and record Tech 2 Freeze Frame data. 3. Monitor “Misfire Cur. #6” on the Tech 2. Is “Misfire Cur. #6” increasing (indicating a misfire currently occurring)?	—	Go to *Step 4*	Go to *Step 3*
3	Monitor “Misfire Hist. #6” while operating the vehicle to duplicate the conditions present when the DTC was set (as defined by the Freeze Frame data recorded in Step 2). Is “Misfire Hist. #6” increasing (indicating a misfire currently occurring)?	—	Go to *Step 4*	Refer to *Diagnostic Aids*
4	1. Visually and physically inspect the vacuum hoses for splits, kinks, and improper connections. Also, inspect the intake manifold for a vacuum leak. 2. If a problem is found, repair it as necessary. Did the inspection reveal a problem?	—	Verify repair	Go to *Step 5*
5	1. Install a spark tester at the spark plug end of the cylinder #6 ignition wire. 2. Crank the engine while observing the spark tester. A crisp, blue spark should be observed. Is adequate spark present?	—	Go to *Step 8*	Go to *Step 6*

Downloaded from www.Manualslib.com manuals search engine

DTC P0306 – Cylinder Misfire Detected (Cont'd)

Step	Action	Value(s)	Yes	No
6	1. Remove and visually/physically inspect the ignition coil associated with cylinder #6. Ensure that the coil is free of cracks and carbon tracking. 2. If a problem is found, replace the damaged ignition coil as necessary. Did the visual inspection reveal a problem?	—	Verify repair	Go to *Step 7*
7	1. Measure the ignition coil primary resistance. 2. If resistance is not within the specified value, replace the faulty ignition coil. Did the ignition coil require replacement?	2.6-2.7 Kμ	Verify repair	Go to *Step 12*
8	Remove the cylinder #6 spark plug and visually inspect the spark plug electrode. Does the inspection reveal excessive fouling?	—	Go to *Contamination Diagnosis* chart in *Engine Mechanical Diagnosis*	Go to *Step 9*
9	1. Visually inspect the spark plug insulator for cracks, carbon tracking, or other damage. 2. If the spark plug is damaged, replace the spark plug. Did the inspection reveal a problem?	—	Verify repair	Go to *Step 10*
10	1. Perform the "Injector Coil/Balance Test." 2. If any faulty injectors are found, replace them as necessary. Did any of the injectors require replacement?	—	Verify repair	Go to *Step 11*
11	1. Inspect the intake manifold and the injector O-rings for a vacuum leak. 2. If a problem is found, repair it as necessary. Did the inspection reveal a problem?	—	Verify repair	Go to *Step 12*
12	Check for an engine mechanical problem. Refer to *Engine Mechanical Diagnosis* to diagnose and repair the following conditions: • A faulty or incorrect camshaft • Leaking or sticky valves or rings • Excessive valve deposits • Weak valve springs • A leaking head gasket Was a basic engine mechanical problem found?	—	Verify repair	Refer to *Diagnostic Aids*

Downloaded from www.Manualslib.com manuals search engine

Diagnostic Trouble Code (DTC) P0325 ION Sensing Module/ION Sensing Knock Intensity Circuit Fault

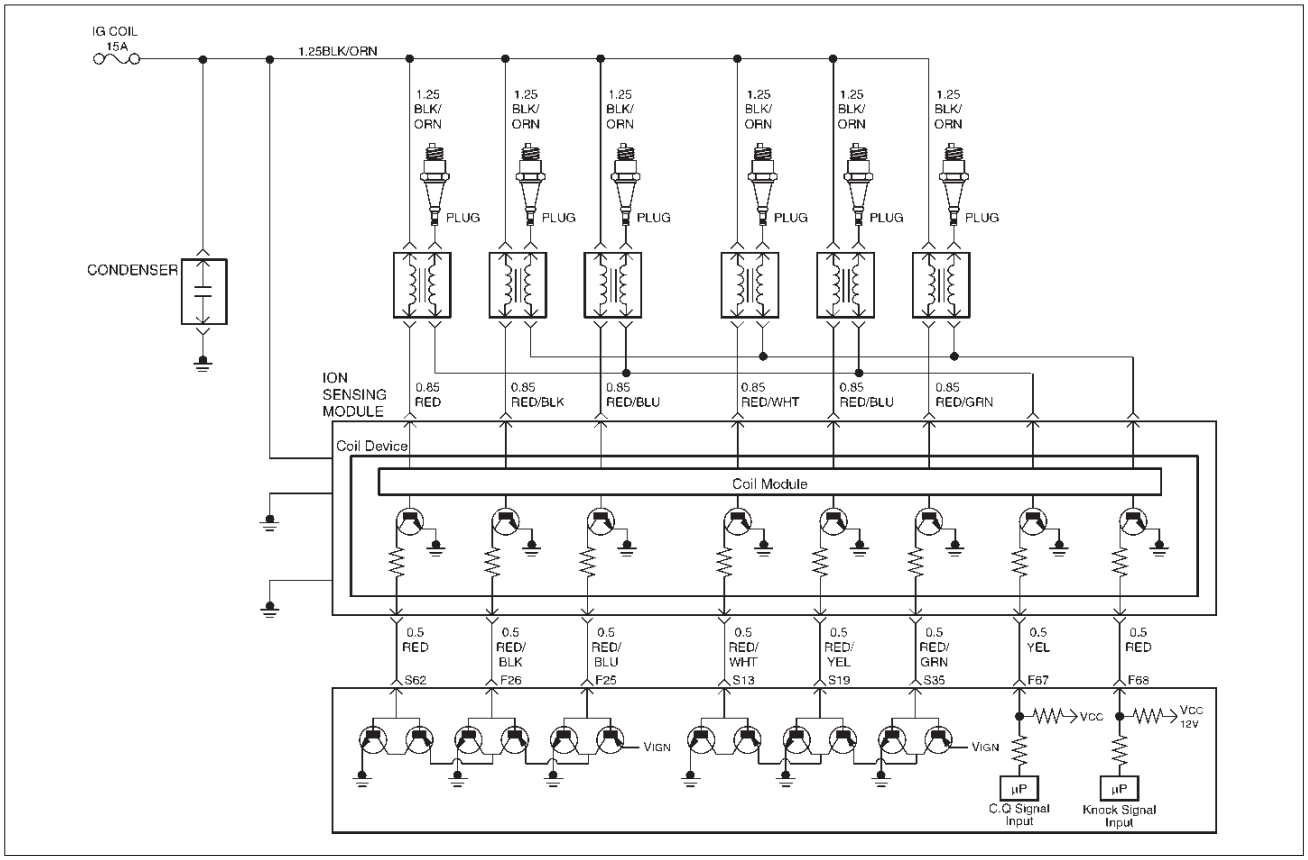

D06RY00067

Circuit Description

The Power Control Module (PCM) checks the validity of the signals used in the ION Sensing module at the following engine opreating conditions.

- The test is performed to evauate the Knock Intensity (KI) signal pulse width if it is within a predetermined renge. If the KI signal puls width is out of the predetermined range, the fail counter will be incremented. If the failure counter excceds the calibration, then test is complete and a failure will be reported. If the sample counter threshold is reached before the failure threshold, then the test is complete and a pass will be reported. This test will detect an open/short in the KI line circuit, ION module faults and analog input faults in the PCM.

Conditions for setting the DTC

- Ignition voltage is between 10volt and 16 volts.
- No Crank DTCs set.
- No EST DTCs.

Action Taken When the DTC Sets

- The PCM will illuminate the malfunction indicator lamp (MIL) the first time the fault is detected.
- The PCM calculates an air flow value based on idle air control valve position, throttle position, RPM and barometric pressure.
- The PCM will store condition which were present when the DTC was set as Freeze Frame and in the Failure Records data.

Conditions for Clearing the MIL/DTC

- The PCM will turn the MIL “OFF” on the third consecutive trip cycle during which the diagnostic has been run and the fault condtion is no longer present.
- A history DTC P0325 will clear after 40 cosecutive trip cycle during which the warm up cycles have occurred without a fault.
- DTC P0325 can be cleared using the Tech2 “Clear Info” function or by disconnecting the PCM battery feed.

Diagnostic Aids

An intermittent may be caused by the following:

- Poor connectons.
- Mis routed harness.
- Rubbed through wire insulation.
- Broken wire inside the insulation.

Check for the following conditions:

- Poor connection at PCM- Inspect harness connectors for backed out terminals, improper mating, broken locks, improperly formed or damaged terminals, and poor terminal to wire connection.
- Damaged harness-Inspect the wiring harness for damage.

  If the harness appears to be OK, observe the Knock Present, Knock Sensor Noise Channel display on the Tech 2 while moving connectors and wiring harnesses related to the sensor.

Downloaded from www.Manualslib.com manuals search engine

A change in the display will indicate the location of the fault.

If DTC P0325 cannot be duplicated, the information included in the Faillure Records data can be useful in determined vehicle mileage since the DTC was last set.

If it is determined that the DTC occurs intermittently, performing the DTC P0325 Diagnostic Chart may isolate the cause of the fault.

DTC P0325 - ION Sensing Module Knock Intensity Circuit Fault

Step	Action	Value(s)	Yes	No
1	Was the “On-Board (OBD) System Check” performed?	—	Go to *Step 2*	Go to *OBD System Check*
2	1. Ignition “ON,” engine “OFF.” 2. Review and record Tech 2 Failure Records data. 3. Operate the vehicle within Failure Records conditions as noted. 4. Using a Tech 2, monitor “DTC” info for DTC P0325. Does the Tech 2 indicate DTC P0325 failed thisignition?	—	Go to *Step 3*	Refer to *Diagnostic Aids*
3	1. Ignition “OFF.” 2. Disconnect the ION sensing module. 3. Disconnect the PCM. Is the action complete?	—	Go to *Step 4*	—
4	Check the ION sensing harness between the PCM (F68) and ION sensing module circuit (RED Wire) at the KI line harness connector. Was a problem found?	—	Verify repair	Go to *Step 5*
5	1. Disconnect the ignition coil. Is the action complete?	—	Go to *Step 6*	—
6	Check the ION sensing harness between the ignition coil and ION sensing module circuit at the DC motor harness connector. Was a problem found?	—	Verify repair	Go to *Step 7*
7	Check the following items; 1. Ignition coil and ignition coil circuit. 2. Ignition coil ground circuit for a poor connection. 3. If a problem is found,repair wiring harness as necessary. Was a problem found?	—	Verify repair	Go to *Step 8*
8	Replace the Ignition coil. Is the action complete?	—	Verify repair	Go to *Step 9*
9	Check the following items; 1. ION sensing module ground circuit for a poor connection. 2. If a problem is found,repair wiring harness as necessary. Was a problem found?	—	Go to *Step 10*	Go to *Step 11*

Downloaded from www.Manualslib.com manuals search engine

DTC P0325 - ION Sensing Module Knock Intensity Circuit Fault (Cont'd)

Step	Action	Value(s)	Yes	No
10	Replace the ION Sensing module. Is the action complete?	—	Verify repair	Go to *Step 10*
11	Replace the PCM. **IMPORTANT:** The replacement PCM must be programmed. Refer to *ON-Vehicle Service in Power Control Module and Sensors for procedures.* And also refer to latest Service Bulletin. Check to see if the latest software is released or not .And then Down Load the LATEST PROGRAMMED SOFTWARE to the replasement PCM. Is the action complete?	—	Verify repair	—

Downloaded from www.Manualslib.com manuals search engine

Diagnostic Trouble Code (DTC) P0336 58X Reference Signal Circuit

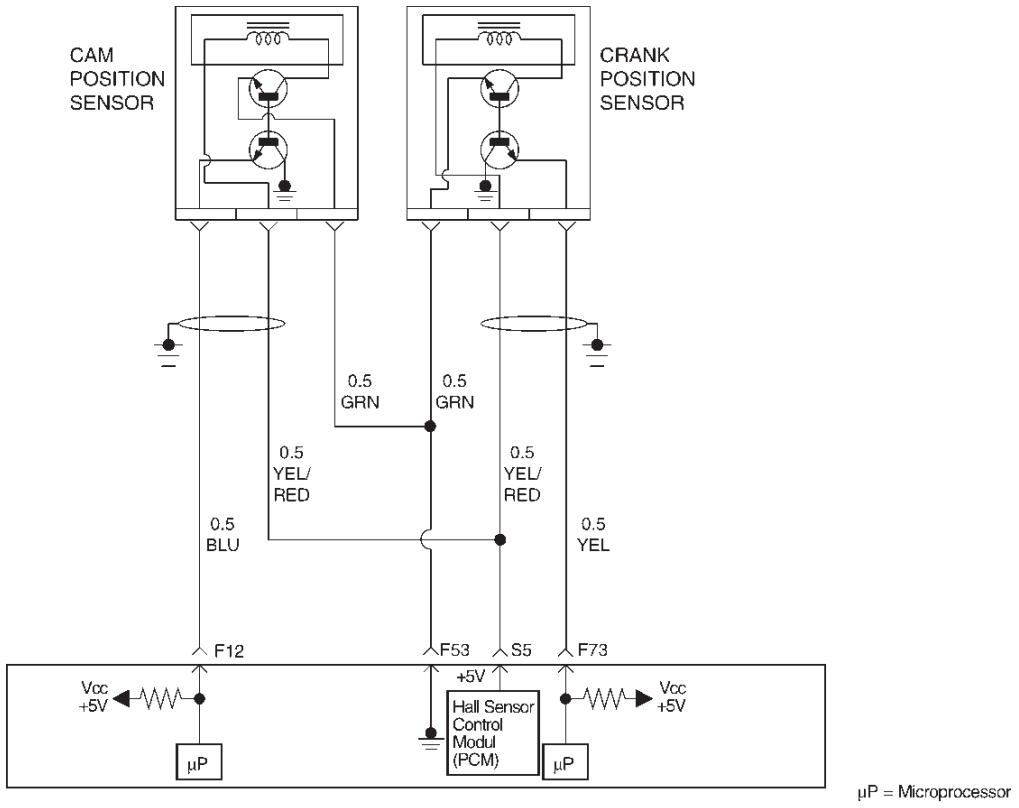

D06RY00066

Circuit Description

The 58X reference signal is produced by the crankshaft position (CKP) sensor. During one crankshaft revolution, 58 crankshaft pulses will be produced. The powertrain control module (PCM) uses the 58X reference signal to calculate engine RPM and crankshaft position. The PCM constantly monitors the number of pulses on the 58X reference circuit and compares them to the number of camshaft position (CMP) signal pulses being received. If the PCM receives an incorrect number of pulses on the 58X reference circuit, DTC P0336 will set.

Conditions for Setting the DTC

- Engine is running.
- Extra or missing pulse is detected between consecutive 58X reference pulses.
- Above condition is detected in 10 of 100 crankshaft rotations.

Action Taken When the DTC Sets

- The PCM will illuminate the malfunction indicator lamp (MIL) after the second consecutive trip in which the fault is detected.
- The PCM will store conditions which were present when the DTC was set as Freeze Frame and in the Failure Records data.

Conditions for Clearing the MIL/DTC

- The PCM will turn the MIL “OFF” on the third consecutive trip cycle during which the diagnostic has been run and the fault condition is no longer present.
- A history DTC P0336 will clear after 40 consecutive warm–up cycles have occurred without a fault.
- DTC P0336 can be cleared by using the Tech 2 “Clear Info” function or by disconnecting the PCM battery feed.

Downloaded from www.Manualslib.com manuals search engine

Diagnostic Aids

An intermittent may be caused by a poor connection, rubbed-through wire insulation or a wire broken inside the insulation. Check for:

- Poor connection - Inspect the PCM harness and connectors for improper mating, broken locks, improperly formed or damaged terminals, and poor terminal-to-wire connection.
- Damaged harness – Inspect the wiring harness for damage. If the harness appears to be OK, disconnect the PCM, turn the ignition on and observe a voltmeter connected to the 58X reference circuit at the PCM harness connector while moving connectors and wiring harnesses related to the PCM. A change in voltage will indicate the location of the fault.

Reviewing the Failure Records vehicle mileage since the diagnostic test last failed may help determine how often the condition that caused the DTC to be set occurs. This may assist in diagnosing the condition.

Downloaded from www.Manualslib.com manuals search engine

DTC P0336 – 58X Reference Signal Circuit

Step	Action	Value(s)	Yes	No
1	Was the "On-Board Diagnostic (OBD) System Check" performed?	—	Go to *Step 2*	Go to *OBD System Check*
2	Attempt to start the engine. Does the engine start?	—	Go to *Step 3*	Go to *"Engine Cranks But Will Not Run"* chart
3	1. Review and record Failure Records information. 2. Clear DTC P0336. 3. Start the engine and idle for 1 minute. 4. Observe DTCs. Is DTC P0336 set?	—	Go to *Step 4*	Refer to Diagnostic Aids
4	1. Disconnect the PCM and CKP sensor. 2. Check for an open or a short to ground in the 58X reference circuit between the CKP sensor connector and the PCM harness connector. 3. If a problem is found, repair as necessary. Was a problem found?	—	Verify repair	Go to *Step 5*
5	1. Reconnect the PCM and CKP sensor. 2. Connect a DVM to measure voltage on the 58X reference circuit at the PCM connector. 3. Observe the voltage while cranking the engine. Is the voltage near the specified value?	2.5 V	Go to *Step 8*	Go to *Step 6*
6	Check the connections at the CKP sensor and replace the terminals if necessary. Did any terminals require replacement?	—	Verify repair	Go to *Step 7*
7	Replace the CKP sensor. Use caution to avoid any hot oil that may drip out. Is the action complete?	—	Verify repair	—
8	Check connections at the PCM and replace the terminals if necessary. Did any terminals require replacement?	—	Verify repair	Go to *Step 9*
9	Replace the PCM. **IMPORTANT:** The replacement PCM must be programmed. Refer to *On-Vehicle Service* in *Powertrain Control Module and Sensors* for procedures. And also refer to latest Service Bulletin. Check to see if the Latest software is released or not. And then Down Load the LATEST PROGRAMMED SOFTWARE to the replacement PCM. Is the action complete?	—	Verify repair	—

Downloaded from www.Manualslib.com manuals search engine

Diagnostic Trouble Code (DTC) P0337 CKP Sensor Circuit Low Frequency

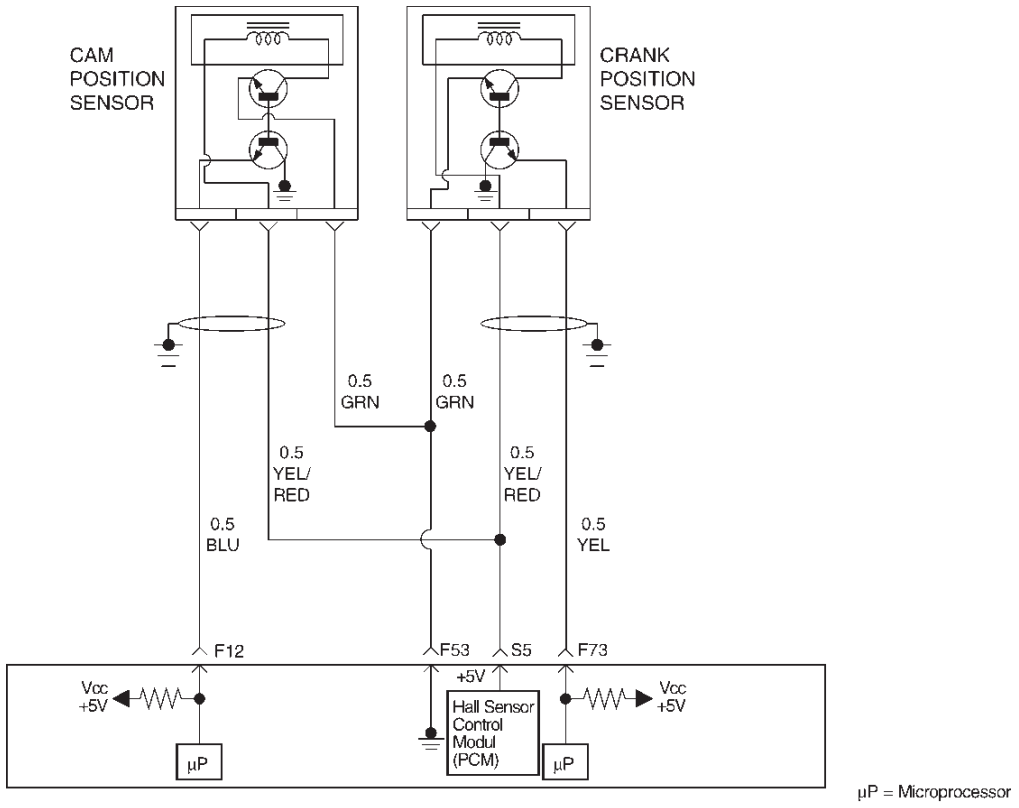

D06RY00066

Circuit Description

The 58X reference signal is produced by the crankshaft position (CKP) sensor. During one crankshaft revolution, 58 crankshaft reference pulses will be produced. The powertrain control module (PCM) uses the 58X reference signal to calculate engine RPM and crankshaft position. The PCM constantly monitors the number of pulses on the 58X reference circuit and compares them to the number of camshaft position (CMP) signal pulses being received. If the PCM does not receive pulses on the 58X reference circuit, DTC P0337 will set.

Conditions for Setting the DTC

- No camshaft position (CMP) sensor DTCs are set.
- Engine cranking.
- Crankshaft position (CKP) sensor signal is not present between two cam pulses.
- CKP reference pulse is not detected within 8 CMP pulses.

Action Taken When the DTC Sets

- The PCM will illuminate the malfunction indicator lamp (MIL) after the second consecutive trip in which the fault is detected.
- The PCM will store conditions which were present when the DTC was set as Freeze Frame and in the Failure Records data.

Conditions for Clearing the MIL/DTC

- The PCM will turn the MIL “OFF” on the third consecutive trip cycle during which the diagnostic has been run and the fault condition is no longer present.
- A history DTC P0337 will clear after 40 consecutive warm-up cycles have occurred without a fault.

Downloaded from www.Manualslib.com manuals search engine

- DTC P0337 can be cleared by using the Tech 2 “Clear Info” function or by disconnecting the PCM battery feed.

Diagnostic Aids

An intermittent may be caused by a poor connection, rubbed-through wire insulation or a wire broken inside the insulation. Check for:

- Poor connection – Inspect the PCM harness and connectors for improper mating, broken locks, improperly formed or damaged terminals, and poor terminal-to-wire connection.
- Damaged harness – Inspect the wiring harness for damage. If the harness appears to be OK, disconnect the PCM, turn the ignition on and observe a voltmeter connected to the 58X reference circuit at the PCM harness connector while moving connectors and wiring harnesses related to the PCM. A change in voltage will indicate the location of the fault.

Reviewing the Failure Records vehicle mileage since the diagnostic test last failed may help determine how often the condition that caused the DTC to be set occurs. This may assist in diagnosing the condition.

DTC P0337 – CKP Sensor Circuit Low Frequency

Step	Action	Value(s)	Yes	No
1	Was the “On-Board Diagnostic (OBD) System Check” performed?	—	Go to *Step 2*	Go to *OBD System Check*
2	Attempt to start the engine. Does the engine start?	—	Go to *Step 3*	Go to *Chart 3*
3	1. Review and record Failure Records information. 2. Clear DTC P0337. 3. Start the engine and idle for 1 minute. 4. Observe DTCs. Is DTC P0337 set?	—	Go to *Step 4*	Refer to *Diagnostic Aid*
4	1. Disconnect the CKP sensor. 2. Ignition “ON.” 3. Using a DVM, verify that 5 V reference and ground are being supplied at the sensor connector (PCM side). Are 4-6 volts and ground available at the sensor?	—	Go to *Step 7*	Go to *Step 5*
5	1. Ignition “ON.” 2. With a DVM, backprobe the PCM connector 5 V reference and ground connections. Are 5 V reference and ground available at the PCM?	—	Go to *Step 6*	Go to *Step 11*
6	Check 5 V reference or ground between the CKP sensor and PCM and repair the open circuit, short to ground or short to voltage. Is the action complete?	—	Verify repair	—
7	1. Ignition “OFF.” 2. Disconnect the PCM and CKP sensor. 3. Check for an open or a short to ground in the 58X reference circuit between the CKP sensor connector and the PCM harness connector. 4. If a problem is found, repair as necessary. Was a problem found?	—	Verify repair	Go to *Step 8*
8	1. Reconnect the PCM and CKP sensor. 2. Connect a DVM to measure voltage on the 58X reference circuit at the PCM connector. 3. Observe the voltage while cranking the engine. Is the voltage near the specified value?	2.5 V	Go to *Step 11*	Go to *Step 9*

Downloaded from www.Manualslib.com manuals search engine

DTC P0337 – CKP Sensor Circuit Low Frequency (Cont'd)

Step	Action	Value(s)	Yes	No
9	Check the connections at the CKP sensor and replace the terminals if necessary. Did any terminals require replacement?	—	Verify repair	Go to *Step 10*
10	Replace the CKP sensor. Use caution and avoid hot oil that may drip out. Is the action complete?	—	Verify repair	—
11	Check the connections at the PCM and replace the terminals if necessary. Did any terminals require replacement?	—	Verify repair	Go to *Step 12*
12	Replace the PCM. **IMPORTANT:** The replacement PCM must be programmed. Refer to *On-Vehicle Service* in *Powertrain Control Module and Sensors* for procedures. And also refer to latest Service Bulletin. Check to see if the Latest software is released or not. And then Down Load the LATEST PROGRAMMED SOFTWARE to the replacement PCM. Is the action complete?	—	Verify repair	—

Downloaded from www.Manualslib.com manuals search engine

Diagnostic Trouble Code (DTC) P0341 CMP Sensor Circuit Performance

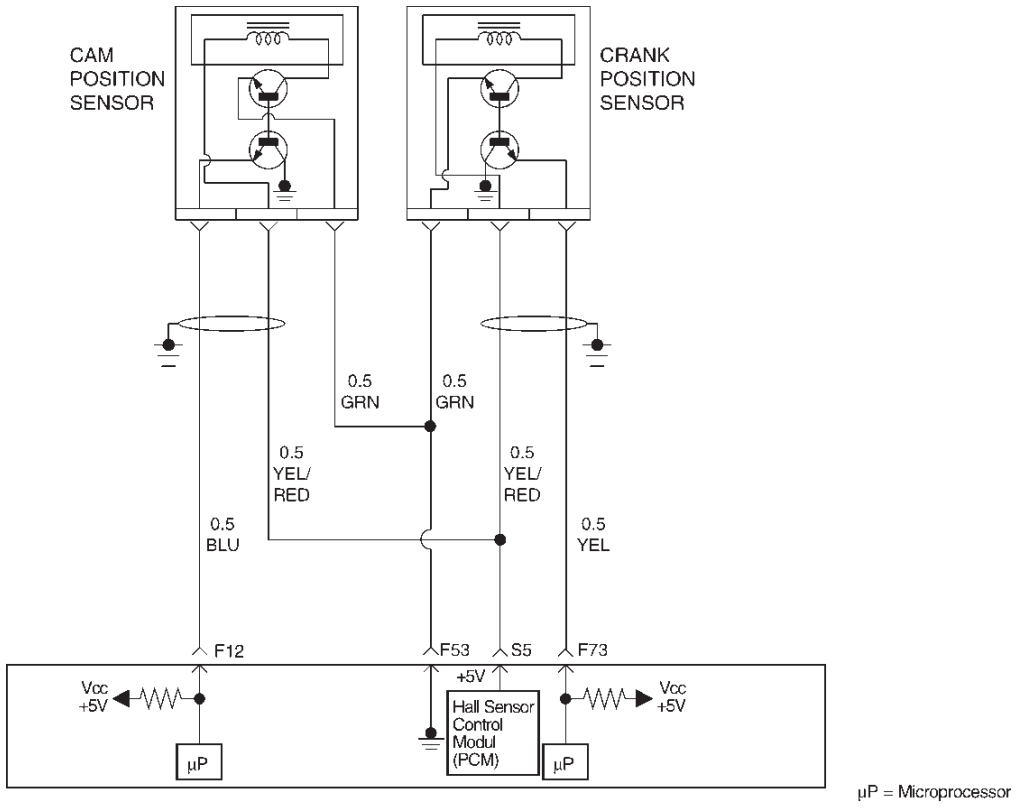

D06RY00066

Circuit Description

The CMP signal is produced by the camshaft position (CMP) sensor pulses when the engine is running and crankshaft position (CKP) sync pulses are also being received. The powertrain control module (PCM) uses the CMP signal pulses to initiate sequential fuel injection. The PCM constantly monitors the number of pulses on the CMP signal circuit and compares the number of CMP pulses to the number of 58X reference pulses received. If the PCM receives an incorrect number of pulses on the CMP reference circuit, DTC P0341 will set and the PCM will initiate injector sequence without the CMP signal with a one in six chance that injector sequence is correct. The engine will continue to start and run normally, although the misfire diagnostic will be affected if a misfiring condition occurs.

Conditions for Setting the DTC

- The engine is running (1X CMP reference pulses are being received).
- The CMP sensor signal is not detected at the correct interval every 6 cylinders.
- Above condition fails for 100 occurrences within 200 test samples.

Action Taken When the DTC Sets

- The PCM will illuminate the malfunction indicator lamp (MIL) after the second consecutive trip in which the fault is detected.
- The PCM will initiate the injector sequence without the CMP signal with a one in six chance that the injector sequence is correct.
- The PCM will store conditions which were present when the DTC was set as Freeze Frame and in the Failure Records data.

Downloaded from www.Manualslib.com manuals search engine

Conditions for Clearing the MIL/DTC

- The PCM will turn the MIL “OFF” on the third consecutive trip cycle during which the diagnostic has been run and the fault condition is no longer present.
- A history DTC P0341 will clear after 40 consecutive warm-up cycles have occurred without a fault.
- DTC P0341 can be cleared by using the Tech 2 “Clear Info” function or by disconnecting the PCM battery feed.

Diagnostic Aids

An intermittent may be caused by a poor connection, rubbed-through wire insulation or a wire broken inside the insulation. Check for:

- Poor connection – Inspect the PCM harness and connectors for improper mating, broken locks, improperly formed or damaged terminals, and poor terminal-to-wire connection.
- Damaged harness – Inspect the wiring harness for damage. If the harness appears to be OK, disconnect the PCM, turn the ignition on and observe a voltmeter connected to the CMP signal circuit at the PCM harness connector while moving connectors and wiring harnesses related to the PCM and the CMP sensor. A change in voltage will indicate the location of the fault.

Reviewing the Failure Records vehicle mileage since the diagnostic test last failed may help determine how often the condition that caused the DTC to be set occurs. This may assist in diagnosing the condition.

Test Description

Number(s) below refer to the step number(s) on the Diagnostic Chart.

2. Ensures that the fault is present.

12. Determines whether the fault is being caused by a missing camshaft magnet or a faulty sensor. The voltage measured in this step should read around 4 volts, toggling to near 0 volts when the CMP sensor interfaces with the camshaft magnet.

Downloaded from www.Manualslib.com manuals search engine

DTC P0341 – CMP Sensor Circuit Performance

Step	Action	Value(s)	Yes	No
1	Was the "On-Board Diagnostic (OBD) System Check" performed?	—	Go to *Step 2*	Go to *OBD System Check*
2	1. Ignition "ON." 2. Review and record Tech 2 Failure Records data. 3. Operate the vehicle within Failure Records conditions as noted. 4. Using a Tech 2, monitor "DTC" info for DTC P0341 until the DTC P0341 test runs. 5. Note the test result. Does the Tech 2 indicate DTC P0341 failed this ignition?	—	Go to *Step 3*	Refer to *Diagnostic Aids*
3	1. Disconnect the CMP sensor. 2. Measure the voltage between the sensor feed circuit and the sensor ground circuit at the CMP sensor harness connector. Does the voltage measure near the specified value?	4-6 V	Go to *Step 4*	Go to *Step 5*
4	Measure the voltage between the CMP sensor signal circuit and the sensor ground circuit at the CMP sensor harness connector. Does the voltage measure near the specified value?	4-6 V	Go to *Step 11*	Go to *Step 8*
5	If the voltage measured in step 3 was less than 4-6 volts, proceed directly to step 6 without completing this step. If the voltage in step 3 was greater than 4-6 V, repair the short to voltage in the CMP feed circuit. Is the action complete?	—	Verify repair	—
6	1. Check for poor connections at the camshaft position sensor. 2. If a problem is found, repair it as necessary. Was a problem found?	—	Verify repair	Go to *Step 7*
7	1. Ignition "OFF," disconnect the PCM and the CMP sensor. 2. Check the following circuits for an open between the ignition control module and the CMP sensor: ● The sensor feed circuit. 3. If a problem is found, repair as necessary. Was a problem found?	—	Verify repair	Go to *Step 9*
8	1. Ignition "OFF," disconnect the PCM (leave the CMP sensor disconnected). 2. Ignition "ON," check the following circuits: ● The CMP sensor signal circuit for an open or a short to voltage. ● The CMP sensor input signal circuit for a short to ground. 3. If a problem is found, repair it as necessary. Was a problem found?	—	Verify repair	Go to *Step 9*
9	Check for a short or open in the sensor ground circuit. Was a problem found?	—	Verify repair	Go to *Step 10*

Downloaded from www.Manualslib.com manuals search engine

DTC P0341 – CMP Sensor Circuit Performance (Cont'd)

Step	Action	Value(s)	Yes	No
10	1. Check for poor connections at the PCM. 2. If a problem is found, repair it as necessary. Was a problem found?	—	Verify repair	Go to *Step 11*
11	Backprobe the PCM connector with a DVM to monitor voltage on the camshaft position input signal circuit while cranking the engine with the sensor connected. (Use rubber band, tape, or an assistant to keep the DVM lead in contact with the sensor terminal during this test.) Does the voltage toggle between the specified values?	4-0 V	Go to *Step 15*	Go to *Step 12*
12	1. Remove the CMP sensor. 2. Place a magnet on the CMP sensor. (If you use a magnet that is too small to cover the face of the sensor, test on every part of the sensor face because only a small area will respond to this test.) Does the DVM display a voltage near the specified value?	0 V	Go to *Step 13*	Go to *Step 14*
13	Replace the faulty or missing camshaft position sensor magnet. Is the action complete?	—	Verify repair	—
14	Replace the camshaft position sensor. Is the action complete?	—	Verify repair	—
15	Replace the PCM. **IMPORTANT:** The replacement PCM must be programmed. Refer to *On-Vehicle Service* in *Powertrain Control Module and Sensors* for procedures. And also refer to latest Service Bulletin. Check to see if the Latest software is released or not. And then Down Load the LATEST PROGRAMMED SOFTWARE to the replacement PCM. Is the action complete?	—	Verify repair	—

Downloaded from www.Manualslib.com manuals search engine

Diagnostic Trouble Code (DTC) P0342 CMP Sensor Circuit Low

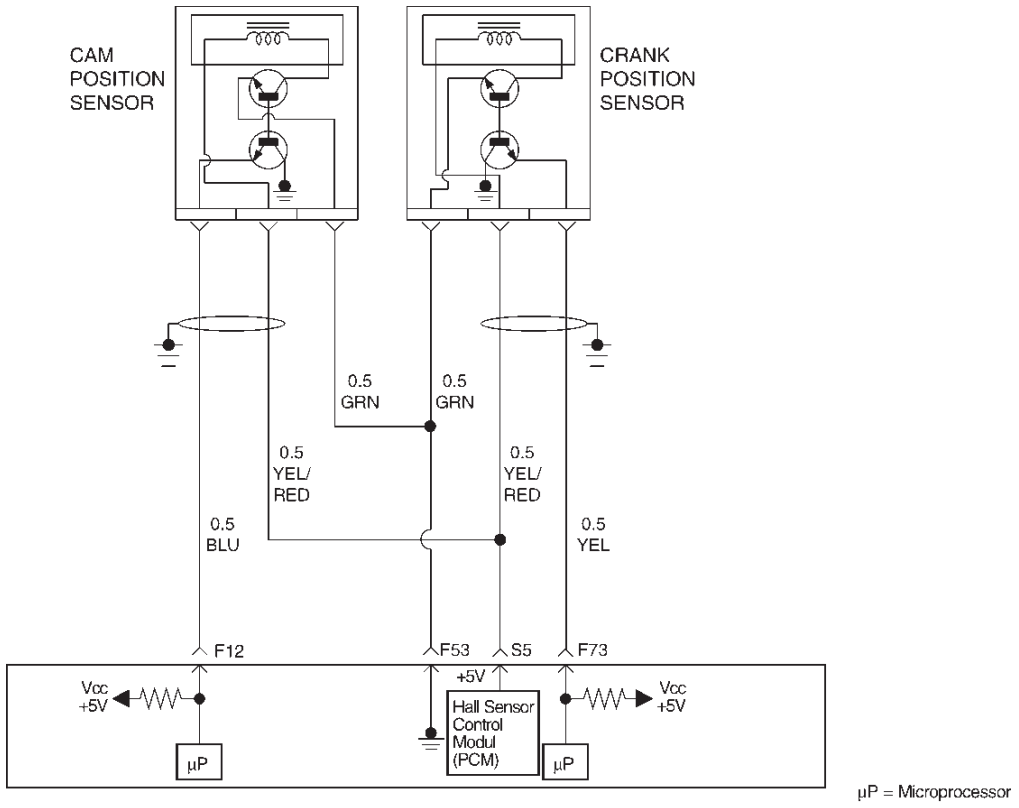

D06RY00066

Circuit Description

The CMP signal produced by the camshaft position (CMP) sensor pulses when the engine is running and crankshaft position (CKP) sync pulses are also being received. The hall type CMP sensor and the CKP sensor share 5 V and ground connections at the powertrain control module (PCM). The third wire at the sensor is a signal circuit to the PCM. The PCM uses the CMP signal pulses to initiate sequential fuel injection. The PCM constantly monitors the number of pulses on the CMP signal circuit and compares the number of CMP pulses to the number of 58X reference pulses received. If the PCM does not receive pulses on the CMP reference circuit, DTC P0342 will set and the PCM will initiate injector sequence without the CMP signal with a one in six chance that injector sequence is correct. The engine will continue to start and run normally, although the misfire diagnostic will be affected if a misfiring condition occurs.

Conditions for Setting the DTC

- The engine is running.
- The CMP sensor signal is not received by the PCM once every 6 cylinders.
- The above condition occurs for 10 seconds.

Action Taken When the DTC Sets

- The PCM will illuminate the malfunction indicator lamp (MIL) after the second consecutive trip in which the fault is detected.
- The PCM will initiate injector sequence without the CMP signal with a one in six chance that the injector sequence is correct.
- The PCM will store conditions which were present when the DTC was set as Freeze Frame and in the Failure Records data.

Downloaded from www.Manualslib.com manuals search engine

Conditions for Clearing the MIL/DTC

- The PCM will turn the MIL "OFF" on the third consecutive trip cycle during which the diagnostic has been run and the fault condition is no longer present.
- A history DTC P0342 will clear after 40 consecutive warm-up cycles have occurred without a fault.
- DTC P0342 can be cleared by using the Tech 2 "Clear Info" function or by disconnecting the PCM battery feed.

Diagnostic Aids

An intermittent may be caused by a poor connection, rubbed-through wire insulation or a wire broken inside the insulation. Check for:

- Poor connection – Inspect the PCM harness and connectors for improper mating, broken locks, improperly formed or damaged terminals, and poor terminal to wire connection.
- Damaged harness – Inspect the wiring harness for damage. If the harness appears to be OK, disconnect the PCM, turn the ignition on and observe a voltmeter connected to the CMP signal circuit at the PCM harness connector while moving connectors and wiring harnesses related to the PCM and the CMP sensor. A change in voltage will indicate the location of the fault.

Test Description

Number(s) below refer to the step number(s) on the Diagnostic Chart.

2. Ensures that the fault is present.

14. Determines whether the fault is being caused by a damaged camshaft or a faulty PCM. The voltage measured in this step should read around 4 volts, toggling to near 0 volts when the CMP sensor interfaces with the camshaft magnet.

DTC P0342 – CMP Sensor Circuit Low

Step	Action	Value(s)	Yes	No
1	Was the "On-Board Diagnostic (OBD) System Check" performed?	—	Go to *Step 2*	Go to *OBD System Check*
2	1. Ignition "ON." 2. Review and record Tech 2 Failure Records data. 3. Operate the vehicle within Failure Records conditions as noted. 4. Using a Tech 2, monitor "DTC" information for DTC P0342 until the DTC P0342 test runs. 5. Note test result. Does the Tech 2 indicate DTC P0342 failed this ignition?	—	Go to *Step 3*	Refer to *Diagnostic Aids*
3	1. Ignition "ON." 2. Disconnect the CMP sensor. 3. Measure the voltage between the sensor feed circuit and the sensor ground circuit at the CMP sensor harness connector. Does the voltage measure near the specified value?	4-6 V	Go to *Step 7*	Go to *Step 4*
4	1. Ignition "OFF," disconnect the PCM and the CMP sensor. 2. Check for poor connections at the camshaft position sensor. 3. If a problem is found, repair it as necessary. Was a problem found?	—	Verify repair	Go to *Step 5*
5	1. Check for poor connections at the PCM. 2. If a problem is found, repair it as necessary. Was a problem found?	—	Verify repair	Go to *Step 6*

Downloaded from www.Manualslib.com manuals search engine

DTC P0342 – CMP Sensor Circuit Low (Cont'd)

Step	Action	Value(s)	Yes	No
6	1. Check the following circuits between the PCM and the CMP sensor: ● The sensor feed circuit. Open or short to ground? ● The sensor ground circuit. Open or short to voltage? 2. If a problem is found, repair as necessary. Was a problem found?	—	Verify repair	—
7	1. Ignition "ON," engine "OFF." 2. Measure the voltage between the CMP sensor signal circuit and the sensor ground circuit at the CMP sensor harness connector. Does the voltage measure near the specified value?	4-6 V	Go to *Step 8*	Go to *Step 9*
8	1. Turn the ignition "OFF." 2. Disconnect the PCM and connect a DVM to monitor voltage on the camshaft position signal circuit at the PCM connector. 3. Ignition "ON." 4. Monitor the voltage display on the DVM while repeatedly touching the CMP sensor signal circuit at the CMP sensor connector with a test light to ground. Does the DVM voltage display switch between 0 and approximately 5 volts when the test light is touched to the CMP sensor signal circuit?	—	Go to *Step 12*	Go to *Step 9*
9	1. Ignition "OFF." 2. Leave the PCM disconnected. 3. Ignition "ON." 4. Probe the camshaft position signal circuit at the PCM connector with a test light to B+. 5. If the test light is "ON," locate and repair the short to ground in the camshaft position input signal circuit. Was either circuit shorted to ground?	—	Verify repair	Go to *Step 10*
10	1. Ignition "OFF." 2. Leave the PCM disconnected. 3. Ignition "ON." 4. Probe the camshaft position signal circuit with a test light to ground. 5. If the test light is "ON," locate and repair the short to voltage in the camshaft position input signal circuit. Was the test light "ON"?	—	Verify repair	Go to *Step 11*
11	1. Ignition "OFF," disconnect the PCM (leave the CMP sensor disconnected). 2. Ignition "ON," check the following circuit: ● The CMP sensor signal circuit for an open. 3. If a problem is found, repair it as necessary. Was a problem found?	—	Verify repair	—

Downloaded from www.Manualslib.com manuals search engine

DTC P0342 – CMP Sensor Circuit Low (Cont'd)

Step	Action	Value(s)	Yes	No
12	1. Ignition "ON." 2. Remove the CMP sensor. 3. Place a magnet on the CMP sensor. If you use a magnet that is too small to cover the face of the sensor, test on every part of the sensor face because only a small area will respond to this test. Does the DVM display a voltage near the specified value?	0 V	Go to *Step 14*	Go to *Step 13*
13	Replace the camshaft position sensor. Is the action complete?	—	Verify repair	—
14	Replace the PCM. **IMPORTANT:** The replacement PCM must be programmed. Refer to *On-Vehicle Service* in *Powertrain Control Module and Sensors* for procedures. And also refer to latest Service Bulletin. Check to see if the Latest software is released or not. And then Down Load the LATEST PROGRAMMED SOFTWARE to the replacement PCM. Is the action complete?	—	Verify repair	—

Downloaded from www.Manualslib.com manuals search engine

Diagnostic Trouble Code (DTC) P0351 Ignition 1 Control Circuit

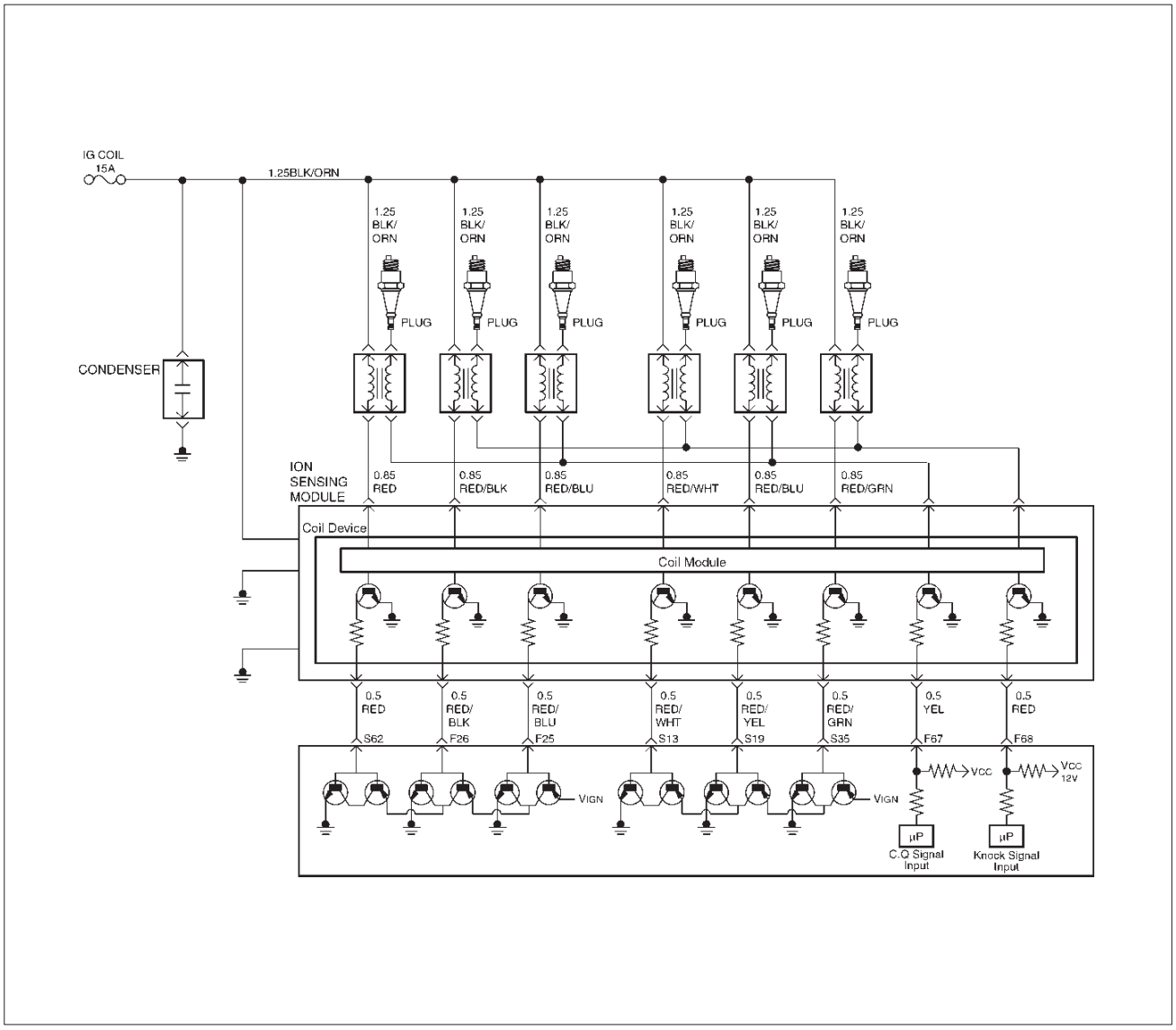

Circuit Description

ION Sensing Module has the function to energize and de-energize the primary ignition coil in response to signals from the PCM. The PCM controls ignition timing and dwell time.

This diagnosis detects open circuit or short-circuiting in the Ignition Electronic Spark Timing (EST) line by monitoring EST signals. A failure determination is made when the signal voltage remains higher or lower than the threshold for corresponding fault code beyond a predetermined time period.

When the PCM detects a problem on EST control circuit 1, it will set a DTC P0351.

Conditions for Setting the DTC

- The ignition is “ON.”
- The engine is turning, determined by the 58X crankshaft position input signal.
- The output voltage is not equal to 5 volts when output is “ON.”
- The output voltage is not equal to 0 volts when output is “OFF.”
- Ten test failures occur within 10 samples of continuous spark events.

Action Taken When the DTC Sets

- The PCM will illuminate the malfunction indicator lamp (MIL) the first time the fault is detected.
- The PCM will store conditions which were present when the DTC was set as Freeze Frame and in the Failure Records data.

Conditions for Clearing the MIL/DTC

- The PCM will turn the MIL “OFF” on the third consecutive trip cycle in which the diagnostic has been run and the fault condition is no longer present.
- A history DTC P0351 will clear after 40 consecutive warm-up cycles occur without a fault.
- DTC P0351 can be cleared by using the Tech 2 “Clear Info” function or by disconnecting the PCM battery feed.

Downloaded from www.Manualslib.com manuals search engine

Diagnostic Aids

Check for the following conditions:

- Poor connection at PCM – Inspect the harness connectors for backed-out terminals, improper mating, broken locks, improperly formed or damaged terminals, and poor terminal-to-wire connections.
- Damaged harness – Inspect the wiring harness for damage. If the harness appears to be OK, observe the Tech 2 display related to DTC P0351 while moving the connector and wiring related to the ignition system. A change in the display will indicate the location of the fault.

Reviewing the Failure Records vehicle mileage since the diagnostic test last failed may help determine how often the condition that caused the DTC to be set occurs. This may assist in diagnosing the condition.

DTC P0351 – Ignition 1 Control Circuit

Step	Action	Value(s)	Yes	No
1	Was the “On-Board Diagnostic (OBD) System Check” performed?	—	Go to *Step 2*	Go to *OBD System Check*
2	1. Ignition “ON,” engine “OFF.” 2. Review and record Tech 2 Failure Records data. 3. Operate the vehicle within Failure Record conditions as noted. 4. Use a Tech 2 to monitor the “DTC” information for DTC P0351 until the DTC P0351 test runs. 5. Note the test result. Does the Tech 2 indicate DTC P0351 failed this ignition cycle?	—	Go to *Step 3*	Go to *Diagnostic Aids*
3	Check for faulty connection at ignition coil. Was a problem found?	—	Verify repair	Go to *Step 4*
4	Check for faulty connection at PCM connector. Was a problem found?	—	Verify repair	Go to *Step 5*
5	1. Ignition “ON,” engine “OFF.” 2. Back probe the ignition control circuit 1 at the ION Sensing Module with a DVM. Is the voltage near the specified value?	25-55 mV	Go to *Step 6*	Go to *Step 9*
6	1. Ignition “ON,” engine running. 2. Back probe the ignition control circuit at the ION Sensing Module for the cylinder being tested. Is the voltage in the specified range, rapidly toggling back and forth to a reading 20-50 mV higher?	100-180 mV	Go to *Step 7*	Go to *Step 13*
7	1. Ignition “OFF.” 2. Disconnect the 3-pin and connector at the ignition coil. 3. Check ignition control circuit 1 voltage at the ignition coil connector while cranking the engine. Does the voltage measure between the specified values?	200-1200 mV	Go to *Step 8*	Go to *Step 11*
8	Replace the ignition coil. Is the action complete?	—	Verify repair	—
9	1. Ignition “OFF.” 2. Disconnect the PCM and the ignition coil. 3. Check ignition control circuit 1 for short to ground. Was a problem found?	—	Verify repair	Go to *Step 10*
10	Check ignition control circuit 1 for short to voltage. Was a problem found?	—	Verify repair	Go to *Step 13*

Downloaded from www.Manualslib.com manuals search engine

DTC P0351 – Ignition 1 Control Circuit (Cont'd)

Step	Action	Value(s)	Yes	No
11	Check for an open ignition control circuit 1. Was the ignition control circuit open?	—	Go to *Step 12*	Go to *Step 13*
12	Repair the open ignition control circuit. Is the action complete?	—	Verify repair	—
13	Replace the PCM. **IMPORTANT:** The replacement PCM must be programmed. Refer to *On-Vehicle Service* in *Powertrain Control Module and Sensors* for procedures. And also refer to latest Service Bulletin. Check to see if the Latest software is released or not. And then Down Load the LATEST PROGRAMMED SOFTWARE to the replacement PCM. Is the action complete?	—	Verify repair	—

Downloaded from www.Manualslib.com manuals search engine

Diagnostic Trouble Code (DTC) P0352 Ignition 2 Control Circuit

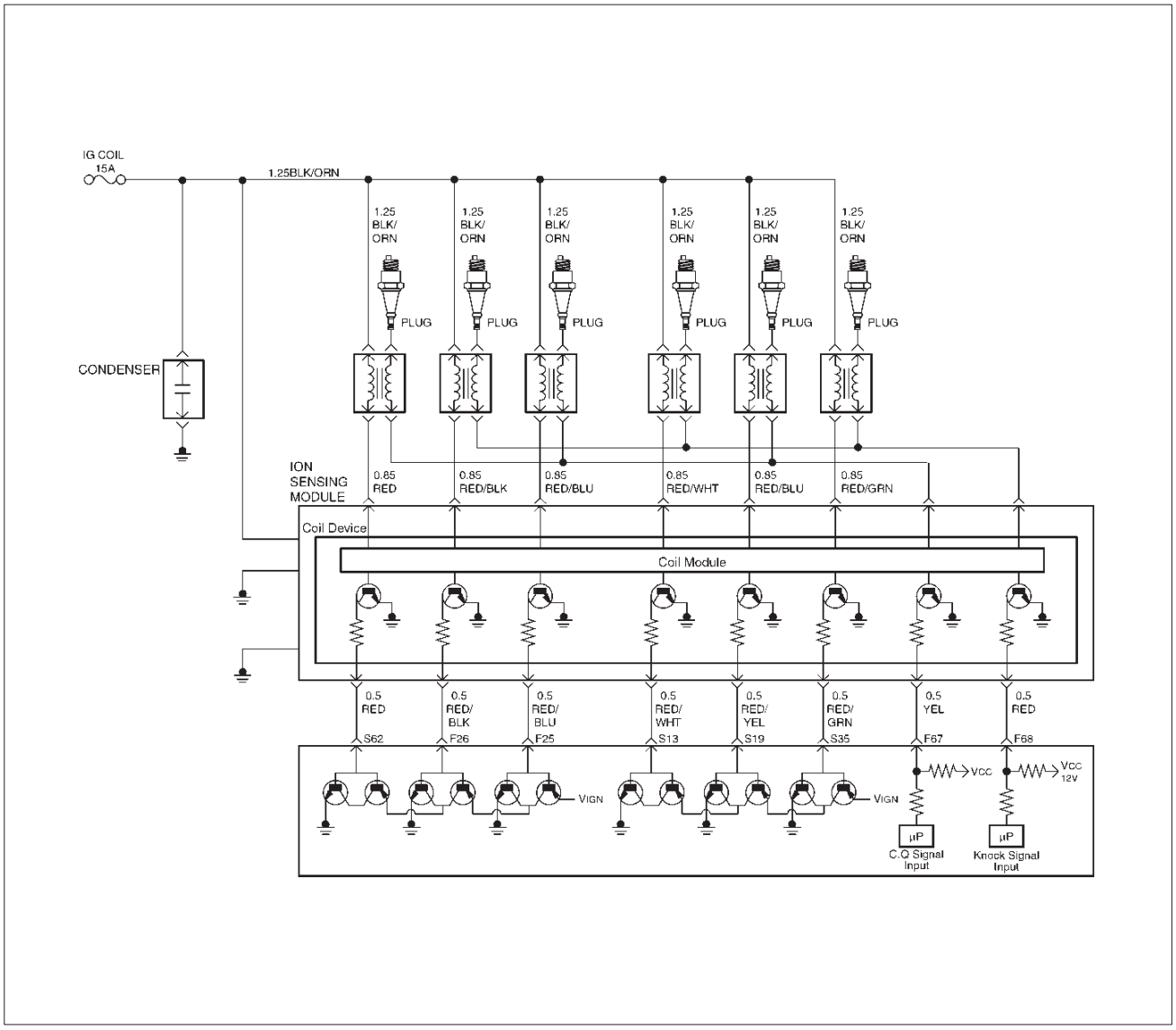

D06RY00067

Circuit Description

ION Sensing Module has the function to energize and de-energize the primary ignition coil in response to signals from the PCM. The PCM controls ignition timing and dwell time.

This diagnosis detects open circuit or short-circuiting in the Ignition Electronic Spark Timing (EST) line by monitoring EST signals. A failure determination is made when the signal voltage remains higher or lower than the threshold for corresponding fault code beyond a predetermined time period.

When the PCM detects a problem on EST control circuit 2, it will set a DTC P0352.

Conditions for Setting the DTC

- The ignition is “ON.”
- The engine is turning, determined by the 58 X crankshaft position input signal.
- The output voltage is not equal to 5 volts when output is “ON.”
- The output voltage is not equal to 0 volts when output is “OFF.”
- Ten test failures occur within 10 samples of continuous spark events.

Action Taken When the DTC Sets

- The PCM will illuminate the malfunction indicator lamp (MIL) the first time the fault is detected.
- The PCM will store conditions which were present when the DTC was set as Freeze Frame and in the Failure Records data.

Conditions for Clearing the MIL/DTC

- The PCM will turn the MIL “OFF” on the third consecutive trip cycle in which the diagnostic has been run and the fault condition is no longer present.
- A history DTC P0352 will clear after 40 consecutive warm-up cycles occur without a fault.
- DTC P0352 can be cleared by using the Tech 2 “Clear Info” function or by disconnecting the PCM battery feed.

Downloaded from www.Manualslib.com manuals search engine

Diagnostic Aids

Check for the following conditions:

- Poor connection at PCM – Inspect the harness connectors for backed-out terminals, improper mating, broken locks, improperly formed or damaged terminals, and poor terminal-to-wire connections.
- Damaged harness – Inspect the wiring harness for damage. If the harness appears to be OK, observe the Tech 2 display related to DTC P0352 while moving the connector and wiring related to the ignition system. A change in the display will indicate the location of the fault.

Reviewing the Failure Records vehicle mileage since the diagnostic test last failed may help determine how often the condition that caused the DTC to be set occurs. This may assist in diagnosing the condition.

DTC P0352 – Ignition 2 Control Circuit

Step	Action	Value(s)	Yes	No
1	Was the “On-Board Diagnostic (OBD) System Check” performed?	—	Go to *Step 2*	Go to *OBD System Check*
2	1. Ignition “ON,” engine “OFF.” 2. Review and record Tech 2 Failure Records data. 3. Operate the vehicle within Failure Record conditions as noted. 4. Use a Tech 2 to monitor the “DTC” information for DTC P0352 until the DTC P0352 test runs. 5. Note the test result. Does the Tech 2 indicate DTC P0352 failed this ignition cycle?	—	Go to *Step 3*	Go to *Diagnostic Aids*
3	Check for faulty connection at ignition coil. Was a problem found?	—	Verify repair	Go to *Step 4*
4	Check for faulty connection at PCM connector. Was a problem found?	—	Verify repair	Go to *Step 5*
5	1. Ignition “ON,” engine “OFF.” 2. Back probe the ignition control circuit 2 at the ION Sensing Module with a DVM . Is the voltage near the specified value?	25-55 mV	Go to *Step 6*	Go to *Step 9*
6	1. Ignition “ON,” engine running. 2. Back probe the ignition control circuit at the ION Sensing Module for the cylinder being tested. Is the voltage in the specified range, rapidly toggling back and forth to a reading 20-50 mV higher?	100-180 mV	Go to *Step 7*	Go to *Step 13*
7	1. Ignition “OFF.” 2. Disconnect the 3-pin connector at the ignition coil. 3. Check ignition control circuit 2 voltage at the ignition coil connector while cranking the engine connector. Does the voltage measure between the specified values?	200-1200 mV	Go to *Step 8*	Go to *Step 11*
8	Replace the ignition coil. Is the action complete?	—	Verify repair	—
9	1. Ignition “OFF.” 2. Disconnect the PCM and the ignition coil. 3. Check ignition control circuit 2 for short to ground. Was a problem found?	—	Verify repair	Go to *Step 10*
10	Check ignition control circuit 2 for short to voltage. Was a problem found?	—	Verify repair	Go to *Step 13*

Downloaded from www.Manualslib.com manuals search engine

DTC P0352 – Ignition 2 Control Circuit (Cont'd)

Step	Action	Value(s)	Yes	No
11	Check for an open ignition control circuit 2. Was the ignition control circuit open?	—	Go to *Step 12*	Go to *Step 13*
12	Repair the open ignition control circuit. Is the action complete?	—	Verify repair	—
13	Replace the PCM. **IMPORTANT:** The replacement PCM must be programmed. Refer to *On-Vehicle Service* in *Powertrain Control Module and Sensors* for procedures. And also refer to latest Service Bulletin. Check to see if the Latest software is released or not. And then Down Load the LATEST PROGRAMMED SOFTWARE to the replacement PCM. Is the action complete?	—	Verify repair	—

Downloaded from www.Manualslib.com manuals search engine

Diagnostic Trouble Code (DTC) P0353 Ignition 3 Control Circuit

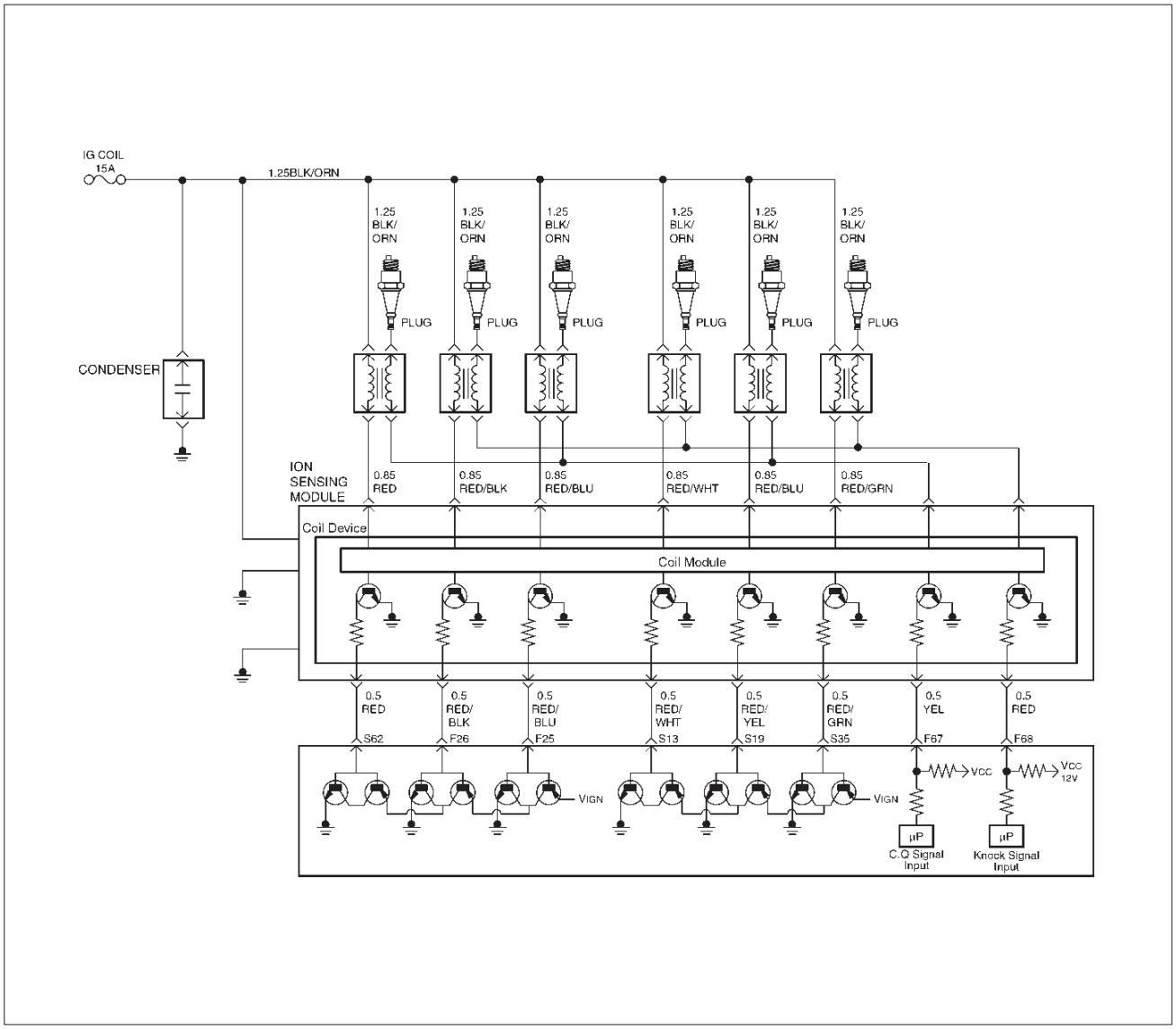

Circuit Description

ION Sensing Module has the function to energize and de-energize the primary ignition coil in response to signals from the PCM. The PCM controls ignition timing and dwell time.

This diagnosis detects open circuit or short-circuiting in the Ignition Electronic Spark Timing (EST) line by monitoring EST signals. A failure determination is made when the signal voltage remains higher or lower than the threshold for corresponding fault code beyond a predetermined time period.

When the PCM detects a problem on EST control circuit 3, it will set a DTC P0353.

Conditions for Setting the DTC

- The ignition is “ON.”
- The engine is turning, determined by the 58X crankshaft position input signal.
- The output voltage is not equal to 5 volts when output is “ON.”
- The output voltage is not equal to 0 volts when output is “OFF.”
- Ten test failures occur within 10 samples of continuous spark events.

Action Taken When the DTC Sets

- The PCM will illuminate the malfunction indicator lamp (MIL) the first time the fault is detected.
- The PCM will store conditions which were present when the DTC was set as Freeze Frame and in the Failure Records data.

Conditions for Clearing the MIL/DTC

- The PCM will turn the MIL “OFF” on the third consecutive trip cycle in which the diagnostic has been run and the fault condition is no longer present.
- A history DTC P0353 will clear after 40 consecutive warm-up cycles occur without a fault.
- DTC P0353 can be cleared by using the Tech 2 “Clear Info” function or by disconnecting the PCM battery feed.

Downloaded from www.Manualslib.com manuals search engine

Diagnostic Aids

Check for the following conditions:

- Poor connection at PCM – Inspect the harness connectors for backed-out terminals, improper mating, broken locks, improperly formed or damaged terminals, and poor terminal-to-wire connections.
- Damaged harness – Inspect the wiring harness for damage. If the harness appears to be OK, observe the Tech 2 display related to DTC P0353 while moving the connector and wiring related to the ignition system. A change in the display will indicate the location of the fault.

Reviewing the Failure Records vehicle mileage since the diagnostic test last failed may help determine how often the condition that caused the DTC to be set occurs. This may assist in diagnosing the condition.

DTC P0353 – Ignition 3 Control Circuit

Step	Action	Value(s)	Yes	No
1	Was the “On-Board Diagnostic (OBD) System Check” performed?	—	Go to *Step 2*	Go to *OBD System Check*
2	1. Ignition “ON,” engine “OFF.” 2. Review and record Tech 2 Failure Records data. 3. Operate the vehicle within Failure Record conditions as noted. 4. Use a Tech 2 to monitor the “DTC” information for DTC P0353 until the DTC P0353 test runs. 5. Note the test result. Does the Tech 2 indicate DTC P0353 failed this ignition cycle?	—	Go to *Step 3*	Go to *Diagnostic Aids*
3	Check for faulty connection at ignition coil. Was a problem found?	—	Verify repair	Go to *Step 4*
4	Check for faulty connection at PCM connector. Was a problem found?	—	Verify repair	Go to *Step 5*
5	1. Ignition “ON,” engine “OFF.” 2. Back probe the ignition control circuit 3 at the ION Sensing Module with a DVM positive lead with the negative lead to ground. Is the voltage near the specified value?	25-55 mV	Go to *Step 6*	Go to *Step 9*
6	1. Ignition “ON,” engine running. 2. Back probe the ignition control circuit at the ION Sensing Module for the cylinder being tested. Is the voltage in the specified range, rapidly toggling back and forth to a reading 20-50 mV higher?	100-180 mV	Go to *Step 7*	Go to *Step 13*
7	1. Ignition “OFF.” 2. Disconnect the 3-pin connector at the ignition coil. 3. Check ignition control circuit 3 voltage at the ignition coil connector while cranking the engine. Does the voltage measure between the specified values?	200-1200 mV	Go to *Step 8*	Go to *Step 11*
8	Replace the ignition coil. Is the action complete?	—	Verify repair	—
9	1. Ignition “OFF.” 2. Disconnect the PCM and the ignition coil. 3. Check ignition control circuit 3 for short to ground. Was a problem found?	—	Verify repair	Go to *Step 10*
10	Check ignition control circuit 3 for short to voltage. Was a problem found?	—	Verify repair	Go to *Step 13*

Downloaded from www.Manualslib.com manuals search engine

DTC P0353 – Ignition 3 Control Circuit (Cont'd)

Step	Action	Value(s)	Yes	No
11	Check for an open ignition control circuit 3. Was the ignition control circuit open?	—	Go to *Step 12*	Go to *Step 13*
12	Repair the open ignition control circuit. Is the action complete?	—	Verify repair	—
13	Replace the PCM. **IMPORTANT:** The replacement PCM must be programmed. Refer to *On-Vehicle Service* in *Powertrain Control Module and Sensors* for procedures. And also refer to latest Service Bulletin. Check to see if the Latest software is released or not. And then Down Load the LATEST PROGRAMMED SOFTWARE to the replacement PCM. Is the action complete?	—	Verify repair	—

Downloaded from www.Manualslib.com manuals search engine

Diagnostic Trouble Code (DTC) P0354 Ignition 4 Control Circuit

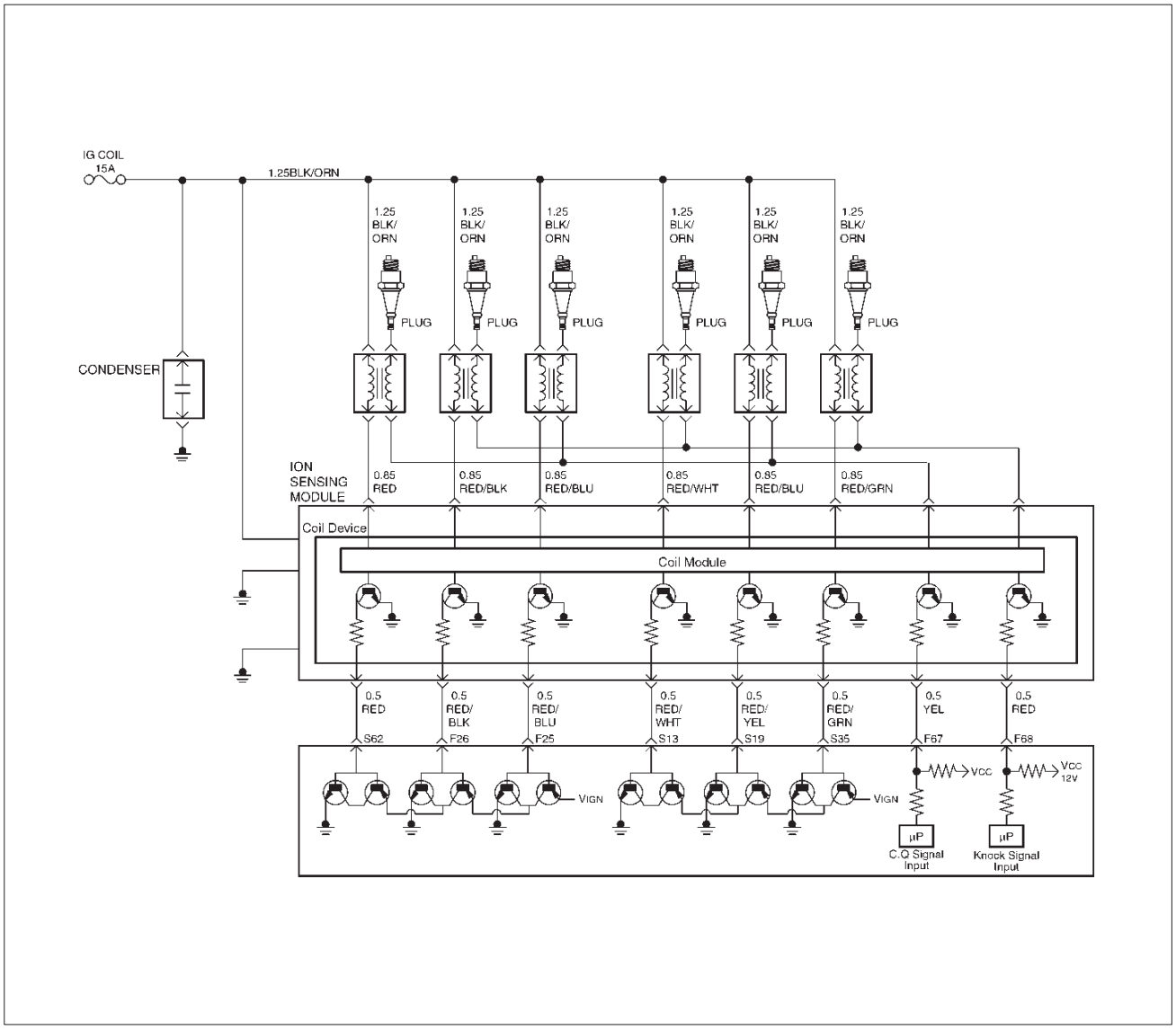

D06RY00067

Circuit Description

ION Sensing Module has the function to energize and de-energize the primary ignition coil in response to signals from the PCM. The PCM controls ignition timing and dwell time.

This diagnosis detects open circuit or short-circuiting in the Ignition Electronic Spark Timing (EST) line by monitoring EST signals. A failure determination is made when the signal voltage remains higher or lower than the threshold for corresponding fault code beyond a predetermined time period.

When the PCM detects a problem on EST control circuit 4, it will set a DTC P0354.

Conditions for Setting the DTC

- The ignition is “ON.”
- The engine is turning, determined by the 58X crankshaft position input signal.
- The output voltage is not equal to 5 volts when output is “ON.”
- The output voltage is not equal to 0 volts when output is “OFF.”
- Ten test failures occur within 10 samples of continuous spark events.

Action Taken When the DTC Sets

- The PCM will illuminate the malfunction indicator lamp (MIL) the first time the fault is detected.
- The PCM will store conditions which were present when the DTC was set as Freeze Frame and in the Failure Records data.

Conditions for Clearing the MIL/DTC

- The PCM will turn the MIL “OFF” on the third consecutive trip cycle in which the diagnostic has been run and the fault condition is no longer present.
- A history DTC P0354 will clear after 40 consecutive warm-up cycles occur without a fault.
- DTC P0354 can be cleared by using the Tech 2 “Clear Info” function or by disconnecting the PCM battery feed.

Downloaded from www.Manualslib.com manuals search engine

Diagnostic Aids

Check for the following conditions:

- Poor connection at PCM – Inspect the harness connectors for backed-out terminals, improper mating, broken locks, improperly formed or damaged terminals, and poor terminal-to-wire connections.
- Damaged harness – Inspect the wiring harness for damage. If the harness appears to be OK, observe the Tech 2 display related to DTC P0354 while moving the connector and wiring related to the ignition system. A change in the display will indicate the location of the fault.

Reviewing the Failure Records vehicle mileage since the diagnostic test last failed may help determine how often the condition that caused the DTC to be set occurs. This may assist in diagnosing the condition.

DTC P0354 – Ignition 4 Control Circuit

Step	Action	Value(s)	Yes	No
1	Was the “On-Board Diagnostic (OBD) System Check” performed?	—	Go to *Step 2*	Go to *OBD System Check*
2	1. Ignition “ON,” engine “OFF.” 2. Review and record Tech 2 Failure Records data. 3. Operate the vehicle within Failure Record conditions as noted. 4. Use a Tech 2 to monitor the “DTC” information for DTC P0354 until the DTC P0354 test runs. 5. Note the test result. Does the Tech 2 indicate DTC P0354 failed this ignition cycle?	—	Go to *Step 3*	Go to *Diagnostic Aids*
3	Check for faulty connection at ignition coil. Was a problem found?	—	Verify repair	Go to *Step 4*
4	Check for faulty connection at PCM connector. Was a problem found?	—	Verify repair	Go to *Step 5*
5	1. Ignition “ON,” engine “OFF.” 2. Back probe the ignition control circuit 4 at the ION Sensing Module with a DVM positive lead with the negative lead to ground. Is the voltage near the specified value?	25-55 mV	Go to *Step 6*	Go to *Step 9*
6	1. Ignition “ON,” engine running. 2. Back probe the ignition control circuit at the ION Sensing Module for the cylinder being tested. Is the voltage in the specified range, rapidly toggling back and forth to a reading 20-50 mV higher?	100-180 mV	Go to *Step 7*	Go to *Step 13*
7	1. Ignition “OFF.” 2. Disconnect the 3-pin connector at the ignition coil. 3. Check ignition control circuit 4 voltage at the ignition coil connector while cranking the engine. Does the voltage measure between the specified values?	200-1200 mV	Go to *Step 8*	Go to *Step 11*
8	Replace the ignition coil. Is the action complete?	—	Verify repair	—
9	1. Ignition “OFF.” 2. Disconnect the PCM and the ignition coil. 3. Check ignition control circuit 4 for short to ground. Was a problem found?	—	Verify repair	Go to *Step 10*
10	Check ignition control circuit 4 for short to voltage. Was a problem found?	—	Verify repair	Go to *Step 13*

Downloaded from www.Manualslib.com manuals search engine

DTC P0354 – Ignition 4 Control Circuit (Cont'd)

Step	Action	Value(s)	Yes	No
11	Check for an open ignition control circuit 4. Was the ignition control circuit open?	—	Go to *Step 12*	Go to *Step 13*
12	Repair the open in ignition control circuit. Is the action complete?	—	Verify repair	—
13	Replace the PCM. **IMPORTANT:** The replacement PCM must be programmed. Refer to *On-Vehicle Service* in *Powertrain Control Module and Sensors* for procedures. And also refer to latest Service Bulletin. Check to see if the Latest software is released or not. And then Down Load the LATEST PROGRAMMED SOFTWARE to the replacement PCM. Is the action complete?	—	Verify repair	—

Downloaded from www.Manualslib.com manuals search engine

Diagnostic Trouble Code (DTC) P0355 Ignition 5 Control Circuit

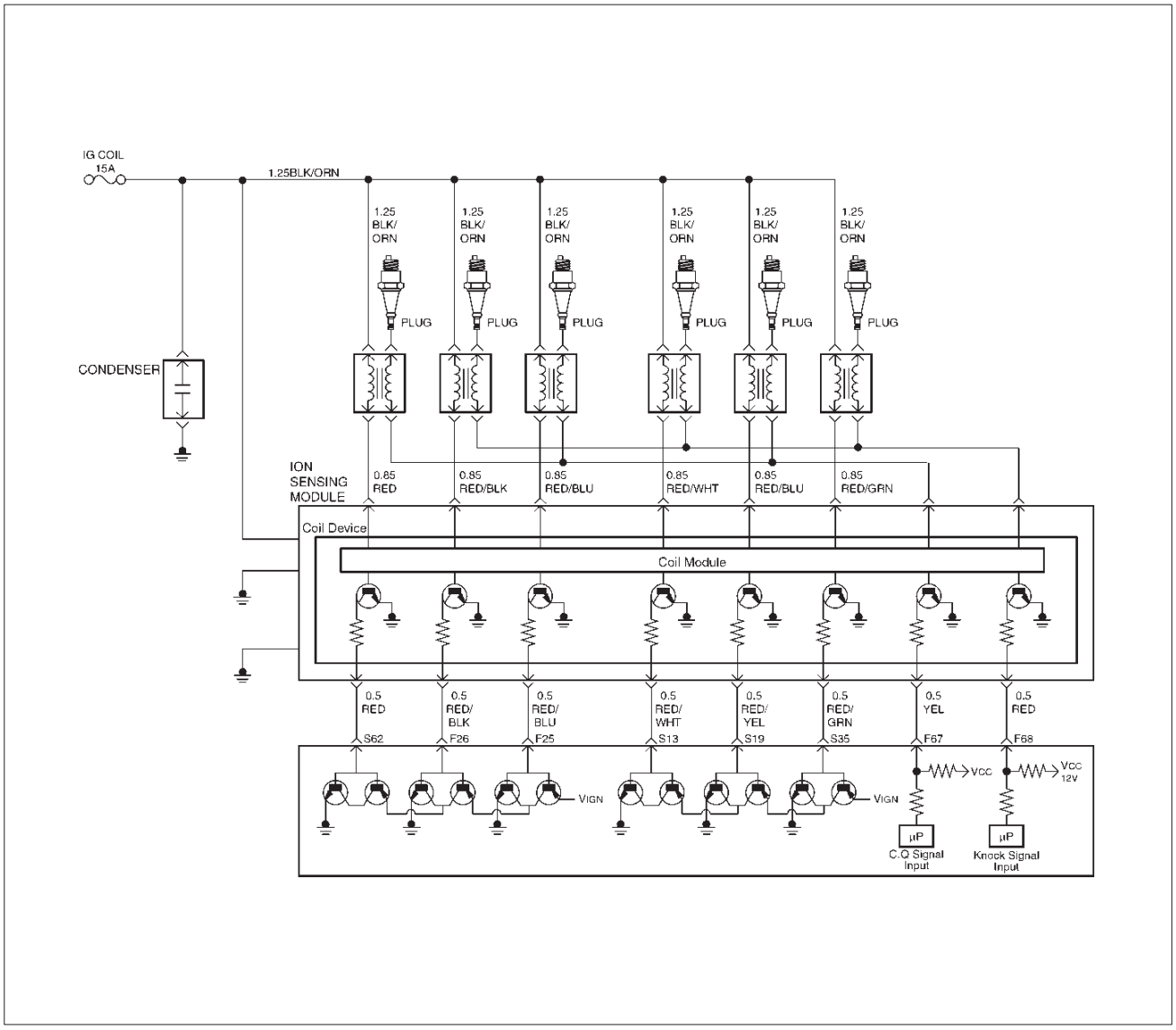

Circuit Description

ION Sensing Module has the function to energize and de-energize the primary ignition coil in response to signals from the PCM. The PCM controls ignition timing and dwell time.

This diagnosis detects open circuit or short-circuiting in the Ignition Electronic Spark Timing (EST) line by monitoring EST signals. A failure determination is made when the signal voltage remains higher or lower than the threshold for corresponding fault code beyond a predetermined time period.

When the PCM detects a problem on EST in control circuit 5, it will set a DTC P0355.

Conditions for Setting the DTC

- The ignition is “ON.”
- The engine is turning, determined by the 58X crankshaft position input signal.
- The output voltage is not equal to 5 volts when output is “ON.”
- The output voltage is not equal to 0 volts when output is “OFF.”
- Ten test failures occur within 10 samples of continuous spark events.

Action Taken When the DTC Sets

- The PCM will illuminate the malfunction indicator lamp (MIL) the first time the fault is detected.
- The PCM will store conditions which were present when the DTC was set as Freeze Frame and in the Failure Records data.

Conditions for Clearing the MIL/DTC

- The PCM will turn the MIL “OFF” on the third consecutive trip cycle in which the diagnostic has been run and the fault condition is no longer present.
- A history DTC P0355 will clear after 40 consecutive warm-up cycles occur without a fault.
- DTC P0355 can be cleared by using the Tech 2 “Clear Info” function or by disconnecting the PCM battery feed.

Downloaded from www.Manualslib.com manuals search engine

Diagnostic Aids

Check for the following conditions:

- Poor connection at PCM – Inspect the harness connectors for backed-out terminals, improper mating, broken locks, improperly formed or damaged terminals, and poor terminal-to-wire connections.
- Damaged harness – Inspect the wiring harness for damage. If the harness appears to be OK, observe the Tech 2 display related to DTC P0355 while moving the connector and wiring related to the ignition system. A change in the display will indicate the location of the fault.

Reviewing the Failure Records vehicle mileage since the diagnostic test last failed may help determine how often the condition that caused the DTC to be set occurs. This may assist in diagnosing the condition.

DTC P0355 – Ignition 5 Control Circuit

Step	Action	Value(s)	Yes	No
1	Was the "On-Board Diagnostic (OBD) System Check" performed?	—	Go to *Step 2*	Go to *OBD System Check*
2	1. Ignition "ON," engine "OFF." 2. Review and record Tech 2 Failure Records data. 3. Operate the vehicle within Failure Record conditions as noted. 4. Use a Tech 2 to monitor the "DTC" information for DTC P0355 until the DTC P0355 test runs. 5. Note the test result. Does the Tech 2 indicate DTC P0355 failed this ignition cycle?	—	Go to *Step 3*	Go to *Diagnostic Aids*
3	Check for faulty connection at ignition coil. Was a problem found?	—	Verify repair	Go to *Step 4*
4	Check for faulty connection at PCM connector. Was a problem found?	—	Verify repair	Go to *Step 5*
5	1. Ignition "ON," engine "OFF." 2. Back probe the ignition control circuit 5 at the ION Sensing Module with a DVM positive lead with the negative lead to ground. Is the voltage near the specified value?	25-55 mV	Go to *Step 6*	Go to *Step 9*
6	1. Ignition "ON," engine running. 2. Back probe the ignition control circuit at the ION Sensing Module for the cylinder being tested. Is the voltage in the specified range, rapidly toggling back and forth to a reading 20-50 mV higher?	100-180 mV	Go to *Step 7*	Go to *Step 13*
7	1. Ignition "OFF." 2. Disconnect the 3-pin connector at the ignition coil. 3. Check ignition control circuit 5 voltage at the ignition coil connector while cranking the engine. Does the voltage measure between the specified values?	200-1200 mV	Go to *Step 8*	Go to *Step 11*
8	Replace the ignition coil. Is the action complete?	—	Verify repair	—
9	1. Ignition "OFF." 2. Disconnect the PCM and the ignition coil. 3. Check ignition control circuit 5 for short to ground. Was a problem found?	—	Verify repair	Go to *Step 10*
10	Check ignition control circuit 5 for short to voltage. Was a problem found?	—	Verify repair	Go to *Step 13*

Downloaded from www.Manualslib.com manuals search engine

DTC P0355 – Ignition 5 Control Circuit (Cont'd)

Step	Action	Value(s)	Yes	No
11	Check for an open ignition control circuit 5. Was the ignition control circuit open?	—	Go to *Step 12*	Go to *Step 13*
12	Repair the open ignition control circuit. Is the action complete?	—	Verify repair	—
13	Replace the PCM. **IMPORTANT:** The replacement PCM must be programmed. Refer to *On-Vehicle Service* in *Powertrain Control Module and Sensors* for procedures. And also refer to latest Service Bulletin. Check to see if the Latest software is released or not. And then Down Load the LATEST PROGRAMMED SOFTWARE to the replacement PCM. Is the action complete?	—	Verify repair	—

Downloaded from www.Manualslib.com manuals search engine

Diagnostic Trouble Code (DTC) P0356 Ignition 6 Control Circuit

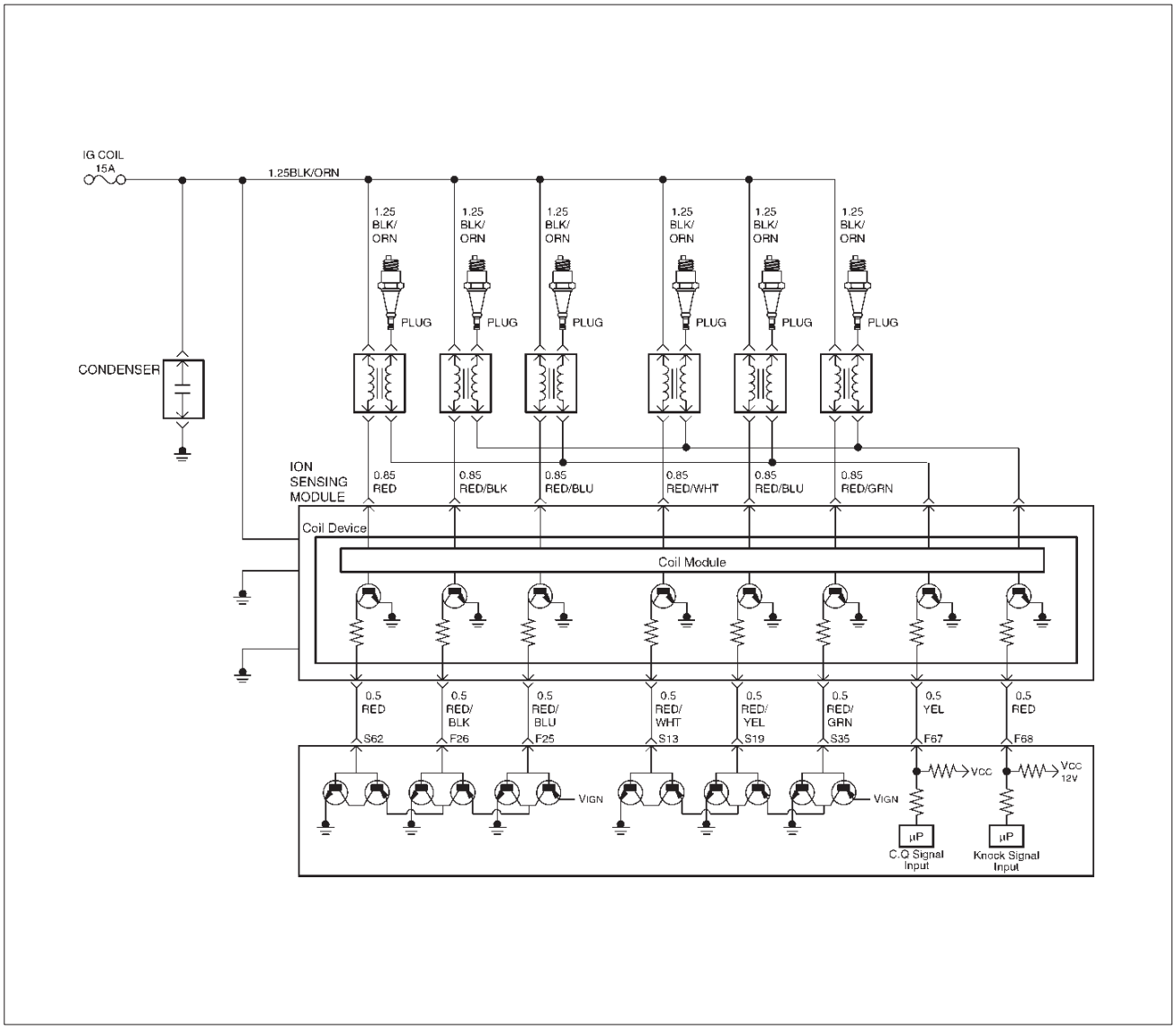

D06RY00067

Circuit Description

ION Sensing Module has the function to energize and de-energize the primary ignition coil in response to signals from the PCM. The PCM controls ignition timing and dwell time.

This diagnosis detects open circuit or short-circuiting in the Ignition Electronic Spark Timing (EST) line by monitoring EST signals. A failure determination is made when the signal voltage remains higher or lower than the threshold for corresponding fault code beyond a predetermined time period.

When the PCM detects a problem on EST control circuit 6, it will set a DTC P0356.

Conditions for Setting the DTC

- The ignition is “ON.”
- The engine is turning, determined by the 58X crankshaft position input signal.
- The output voltage is not equal to 5 volts when output is “ON.”
- The output voltage is not equal to 0 volts when output is “OFF.”
- Ten test failures occur within 10 samples of continuous circuit monitoring.

Action Taken When the DTC Sets

- The PCM will illuminate the malfunction indicator lamp (MIL) the first time the fault is detected.
- The PCM will store conditions which were present when the DTC was set as Freeze Frame and in the Failure Records data.

Conditions for Clearing the MIL/DTC

- The PCM will turn the MIL “OFF” on the third consecutive trip cycle in which the diagnostic has been run and the fault condition is no longer present.
- A history DTC P0356 will clear after 40 consecutive warm-up cycles occur without a fault.
- DTC P0356 can be cleared by using the Tech 2 “Clear Info” function or by disconnecting the PCM battery feed.

Downloaded from www.Manualslib.com manuals search engine

Diagnostic Aids

Check for the following conditions:

- Poor connection at PCM – Inspect the harness connectors for backed-out terminals, improper mating, broken locks, improperly formed or damaged terminals, and poor terminal-to-wire connections.
- Damaged harness – Inspect the wiring harness for damage. If the harness appears to be OK, observe the Tech 2 display related to DTC P0356 while moving the connector and wiring related to the ignition system. A change in the display will indicate the location of the fault.

Reviewing the Failure Records vehicle mileage since the diagnostic test last failed may help determine how often the condition that caused the DTC to be set occurs. This may assist in diagnosing the condition.

DTC P0356 – Ignition 6 Control Circuit

Step	Action	Value(s)	Yes	No
1	Was the “On-Board Diagnostic (OBD) System Check” performed?	—	Go to *Step 2*	Go to *OBD System Check*
2	1. Ignition “ON,” engine “OFF.” 2. Review and record Tech 2 Failure Records data. 3. Operate the vehicle within Failure Record conditions as noted. 4. Use a Tech 2 to monitor the “DTC” information for DTC P0356 until the DTC P0356 test runs. 5. Note the test result. Does the Tech 2 indicate DTC P0356 failed this ignition cycle?	—	Go to *Step 3*	Go to *Diagnostic Aids*
3	Check for faulty connection at ignition coil. Was a problem found?	—	Verify repair	Go to *Step 4*
4	Check for faulty connection at PCM connector. Was a problem found?	—	Verify repair	Go to *Step 5*
5	1. Ignition “ON,” engine “OFF.” 2. Back probe the ignition control circuit 6 at the ION Sensing Module with a DVM positive lead with the negative lead to ground. Is the voltage near the specified value?	25-55 mV	Go to *Step 6*	Go to *Step 9*
6	1. Ignition “ON,” engine running. 2. Back probe the ignition control circuit at the ION Sensing Module for the cylinder being tested. Is the voltage in the specified range, rapidly toggling back and forth to a reading 20-50 mV higher?	100-180 mV	Go to *Step 7*	Go to *Step 13*
7	1. Ignition “OFF.” 2. Disconnect the 3-pin connector at the ignition coil. 3. Check ignition control circuit 6 voltage at the ignition coil connector while cranking the engine. Does the voltage measure between the specified values?	200-1200 mV	Go to *Step 8*	Go to *Step 11*
8	Replace the ignition coil. Is the action complete?	—	Verify repair	—
9	1. Ignition “OFF.” 2. Disconnect the PCM and the ignition coil. 3. Check ignition control circuit 6 for short to ground. Was a problem found?	—	Verify repair	Go to *Step 10*
10	Check ignition control circuit 6 for short to voltage. Was a problem found?	—	Verify repair	Go to *Step 13*

Downloaded from www.Manualslib.com manuals search engine

DTC P0356 – Ignition 6 Control Circuit (Cont'd)

Step	Action	Value(s)	Yes	No
11	Check for an open ignition control circuit 6. Was the ignition control circuit open?	—	Go to *Step 12*	Go to *Step 13*
12	Repair the open ignition control circuit. Is the action complete?	—	Verify repair	—
13	Replace the PCM. **IMPORTANT:** The replacement PCM must be programmed. Refer to *On-Vehicle Service* in *Powertrain Control Module and Sensors* for procedures. And also refer to latest Service Bulletin. Check to see if the Latest software is released or not. And then Down Load the LATEST PROGRAMMED SOFTWARE to the replacement PCM. Is the action complete?	—	Verify repair	—

Downloaded from www.Manualslib.com manuals search engine

Diagnostic Trouble Code (DTC) P0401 EGR Flow Insufficient

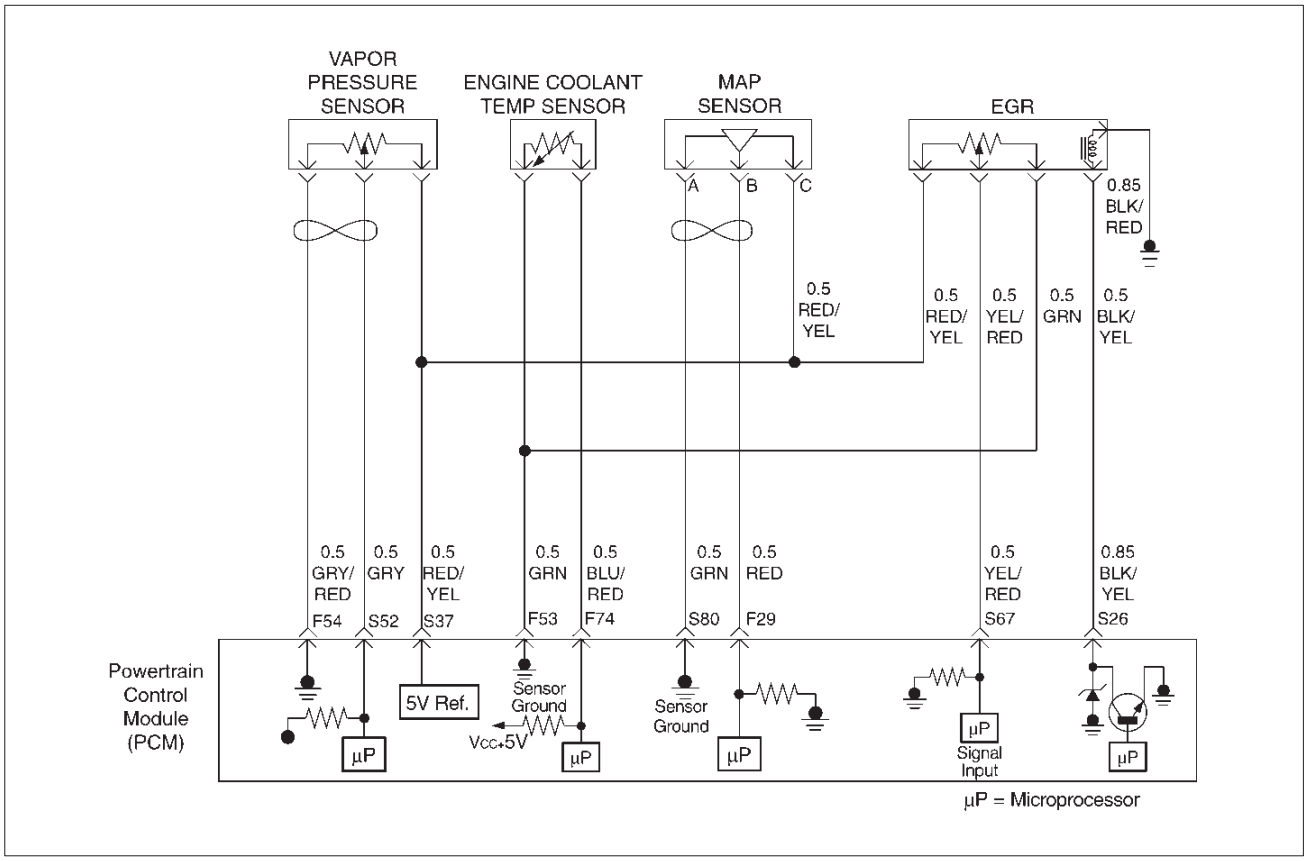

D06RY00178

Circuit Description

The powertrain control module (PCM) tests the exhaust gas recirculation (EGR) system during deceleration by momentarily commanding the EGR valve to open while monitoring the manifold absolute pressure (MAP) sensor signal. When the EGR valve is opened, the PCM monitors the change in MAP input signal. The PCM compares the MAP change to a RPM vs. BARO table. When the PCM interprets the change in MAP to be out of limits, the PCM will set DTC P0401. The number of test samples required to accomplish this may vary according to the severity of the detected flow error.

Normally, the PCM will only allow one EGR flow test sample to be taken during an ignition cycle. To aid in verifying a repair, the PCM allows twelve test samples during the first ignition cycle following a Tech 2 "Clear Info" or a battery disconnect. Between nine and twelve samples should be sufficient for the PCM to determine adequate EGR flow and pass the EGR test.

Conditions for Setting the DTC

- No TP sensor, vehicle speed sensor (VSS), MAP sensor, EGR Pintle Position sensor, ECT sensor, misfire, or automatic transmission DTCs set.
- Engine coolant temperature is greater than 60˚C (140˚F).
- Ignition voltage between 11.5 and 16 volts.
- Vehicle speed is greater than 24 km/h (15 mph).
- A/C clutch status is unchanged.
- TCC status is unchanged.

Start Test

- TP angle is less than 1%.
- EGR duty cycle is less than 1%.
- MAP is steady, changing less than 2 kPa.
- Engine speed is between 1100 RPM and 2000 RPM.
- MAP between 10 kPa and 40 kPa.

The test will be aborted if the vehicle speed changes by more than 16 km/h (10 mph), engine speed changes by more than 100 RPM or the EGR is opened less than 95% of commanded position.

- The PCM will only run the EGR test during a closed throttle condition.
- The PCM will only run the EGR test at vehicle speeds above 24 km/h (15 mph).
- Several deceleration cycles will be necessary to run a sufficient number of EGR flow tests.

Diagnostic Aids

Check for the following conditions:

- Poor connection or damaged harness – Inspect the wiring harness for damage. If the harness appears to be OK, observe the Actual EGR Position display on the Tech 2 while moving connectors and wiring harnesses related to the EGR valve. A change in the display will indicate the location of the fault.
- Ensure EGR valve is correctly mounted. See *On-Vehicle Service*.

Downloaded from www.Manualslib.com manuals search engine

Reviewing the Failure Records vehicle mileage since the diagnostic test last failed may help determine how often the condition that caused the DTC to be set occurs. This may assist in diagnosing the condition.

NOTE: If the EGR valve shows signs of excessive heat, check the exhaust system for blockage (possibly a plugged catalytic converter) using the “Restricted Exhaust System Check.”

Test Description

Number(s) below refer to the step number(s) on the Diagnostic Chart

3. A malfunctioning MAP sensor can set an EGR DTC. The MAP sensor could send a constant signal which is not low enough to set a low MAP DTC. The constant signal from the MAP sensor also may not be high enough to set a high MAP DTC. This step verifies that the MAP sensor is responding.

Downloaded from www.Manualslib.com manuals search engine

DTC P0401 – EGR Flow Insufficient

Step	Action	Value(s)	Yes	No
1	Was the “On-Board Diagnostic (OBD) System Check” performed?	—	Go to *Step 2*	Go to *OBD System Check*
2	Is DTC P1404 also set?	—	Go to *DTC 1404*	Go to *Step 3*
3	1. Start the engine. 2. Monitor the MAP signal with a Tech 2 while idling. 3. While idling, jab the accelerator pedal about halfway down and immediately let the engine return to idle. Did the MAP value on the Tech 2 show an immediate large change?	—	Go to *Step 5*	Go to *Step 4*
4	Replace the MAP sensor. Is the action complete?	—	Verify repair	—
5	1. Inspect the exhaust system for modification of original installed parts or leaks. 2. If a problem was found, repair exhaust system as necessary. Was a condition present that required repair?	—	Go to *Step 8*	Go to *Step 6*
6	1. Remove the EGR valve. 2. Visually and physically inspect the pintle, valve passages and the adapter for excessive deposits or any kind of a restriction. 3. If a problem is found, clean or replace EGR system components as necessary. Was a condition present that required repair?	—	Go to *Step 8*	Go to *Step 7*
7	1. Remove the EGR inlet and outlet pipes from the exhaust manifold and the intake manifold. 2. Inspect the manifold EGR ports and the EGR inlet and outlet pipes for a blockage caused by excessive deposits or other damage. 3. If a problem is found, correct the condition as necessary. Was a condition present that required repair?	—	Go to *Step 8*	Refer to *Diagnostic Aids*
8	1. Review and record the Tech 2 Failure Records data. 2. Clear DTC and monitor the Tech 2 System Info Screen while operating the vehicle as specified in “Diagnostic Aids.” 3. Using a Tech 2, monitor “DTC” info for DTC P0401 until the DTC P0401 test runs. 4. Note the test result. Does the Tech 2 indicate DTC P0401 failed this ignition?	—	—	Repair complete

Downloaded from www.Manualslib.com manuals search engine

Diagnostic Trouble Code (DTC) P0402 EGR Pintle Crank Error

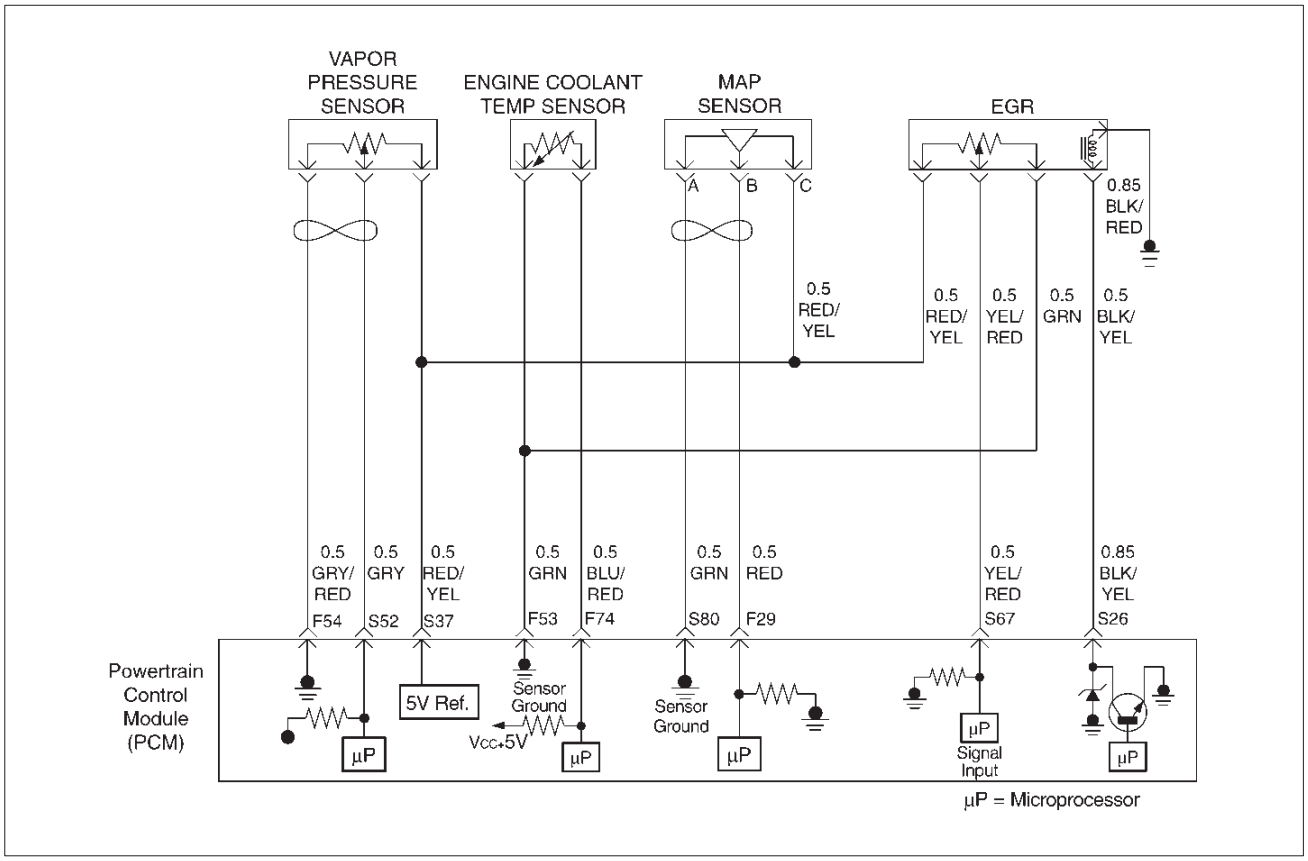

D06RY00178

Circuit Description

The powertrain control module (PCM) monitors the EGR valve pintle position input to ensure that the valve responds properly to commands from the PCM, and to detect a fault if pintle position is stuck open. If the PCM detects a pintle position signal indicates more than 21.5% and more than for 625 msec during cranking, the PCM will set DTC P0402.

Conditions for Setting the DTC

- Ignition voltage is between 11 and 16 volts.
- Intake Air temp is more than 3˚C
- At Engine revolution less than 600 RPM, EGR pintle position indicates more than 21.0% and more than for 625 msecs.

Action Taken When the DTC Sets

- The PCM will illuminate the malfunction indicator lamp (MIL) after the second consecutive trip in which the fault is detected.
- The PCM will store conditions which were present when the DTC was set as Freeze Frame and in Failure Records data.

Conditions for Clearing the MIL/DTC

- The PCM will turn the MIL “OFF” on the third consecutive trip cycle during which the diagnostic has been run and the fault condition is no longer present.
- A history DTC P0402 will clear after 40 consecutive warm-up cycles have occurred without a fault.
- DTC P0402 can be cleared by using the Tech 2 “Clear Info” function or by disconnecting the PCM battery feed.

Diagnostic Aids

Check for the following conditions:

- Foreign material on EGR valve between pintle and seat may cause EGR stuck open. Inspect foreign material in EGR valve.
- Excessive carbon deposit may cause unsmooth operation of EGR valve shaft. Inspect carbon deposit and clean up inside of carbon deposit.
- Poor connection or damaged harness–inspect the wiring harness for damage If the harness appears to be OK, observe the EGR actual position display on the Tech 2 while moving connectors and wiring harnesses related to EGR valve. A change in the display will indicate the location of the fault.

NOTE: If the EGR valve shows signs of excessive heat, check the exhaust system for blockage (possibly a plugged catalytic converter) using the “Restricted Exhaust System Check”.

Downloaded from www.Manualslib.com manuals search engine

DTC P0402 – EGR Pintle Crank Open Error

Step	Action	Value(s)	Yes	No
1	Was the “On-Board Diagnostic (OBD) System Check” performed?	—	Go to *Step 2*	Go to *OBD System Check*
2	1. Ignition “ON”, engine “OFF”, review and record Tech 2 Failure Records data. 2. Operate the vehicle within Failure Records conditions as noted. 3. Using a Tech 2, monitor “DTC” info for DTC P0402 until the DTC P0402 test runs. Note the result. Does the Tech 2 indicates DTC P0402 failed this ignition?	—	Go to *Step 3*	Refer to *Diagnostic Aids*
3	1. Disconnect the EGR valve harness connector. 2. Inspect the EGR valve and connectors for damaged pin or terminals. Were there any damaged pins or terminals?	—	Go to *Step 4*	Go to *Step 5*
4	Repair the damaged pin or terminal. Is the action complete?	—	Verify repair	—
5	1. Remove EGR valve from Engine. 2. Inspect EGR valve whether there is any foreign material between seat and pintle. Was any foreign material in EGR valve?	—	Go to *Step 6*	Go to *Step 7*
6	1. Remove EGR valve foreign material from EGR valve and clean up inside. 2. Visually inspect damage of pintle and seat, which leakage may occur. Was there any severe damage which affects function?	—	Go to *Step 7*	Verify repair Go to *Step 8*
7	1. Reconnect. 2. Ignition “OFF”. 3. Install the Tech 2. 4. Run the engine at idle. 5. On Tech-II, select special function for EGR. 6. Use the “UP” arrow to increase the EGR from 0% to 40%. Did EGR work properly?	—	—	Go to *Step 8*
8	Replace the EGR valve. Does DTC P0402 still fail “DTC” test on the Tech 2?	—	Go to *Step 9*	Verify repair
9	Replace the EGR valve. Is the action complete?	—	Verify repair	—

Downloaded from www.Manualslib.com manuals search engine

Diagnostic Trouble Code (DTC) P0404 EGR Open Stuck

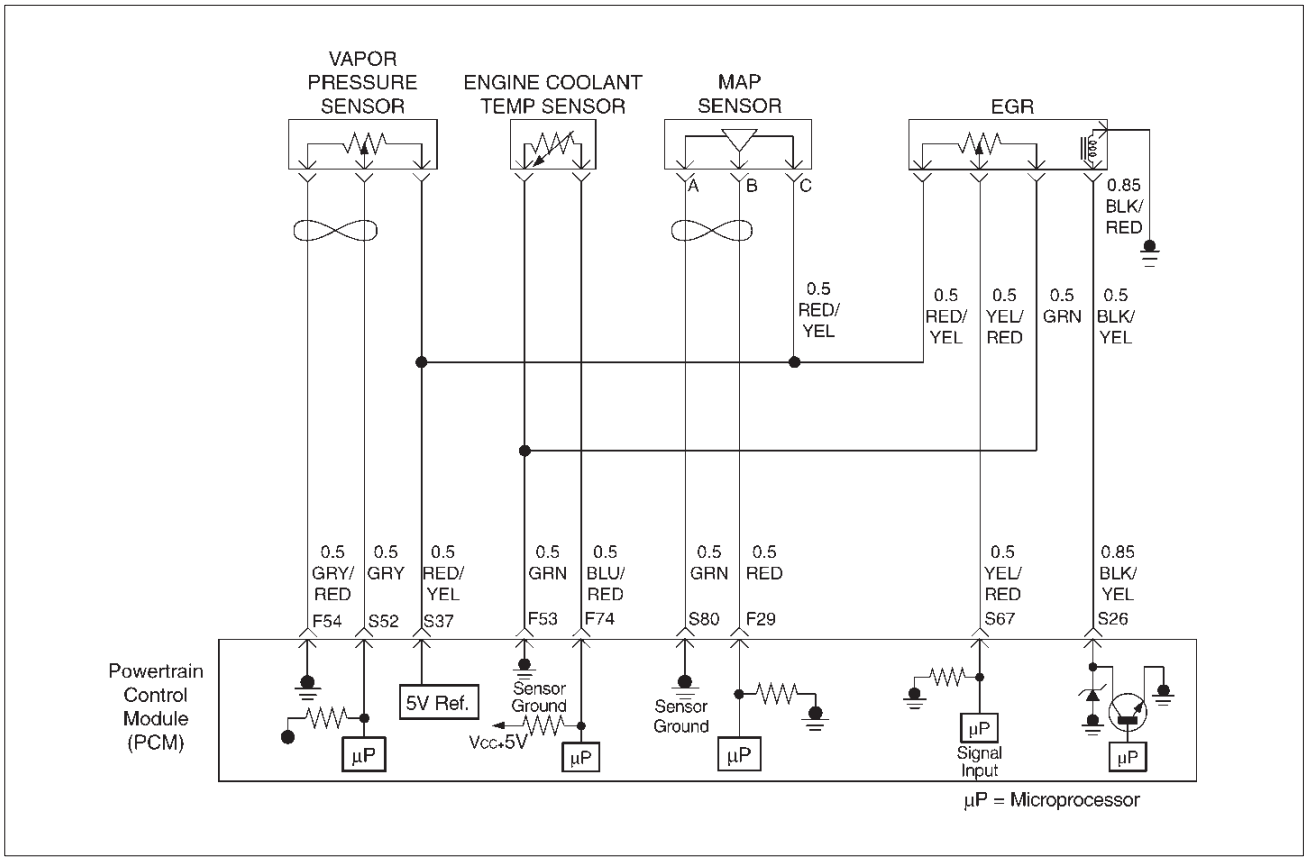

D06RY00178

Circuit Description

The powertrain control module (PCM) monitors the EGR valve pintle position input to ensure that the valve responds properly to commands from the PCM, and to detect a fault if pintle position is different from commanded position. If the PCM detects a pintle position signal indicates more than 15 points different between current and commanded and more than 15 seconds, the PCM will set DTC P0404.

Conditions for Setting the DTC

- The engine is running.
- Ignition voltage is between 11 and 16 volts.
- Intake Air temp is more than 3˚C.
- Desire EGR position is more than 0.
- The difference between desired EGR and current EGR is less than 3%.
- Difference EGR pintle position between current and commanded position becomes more than 15% and last more than 15 seconds, and this condition meets three times in a trip. Then it trigger, the PCM lights on.

Action Taken When the DTC Sets

- The PCM will illuminate the malfunction indicator lamp (MIL) as soon as failure detected after consecutive 2nd trip in which the fault is detected.
- The PCM will store conditions which were present when the DTC was set as Freeze Frame and in Failure Records data.

Conditions for Clearing the MIL/DTC

- The PCM will turn the MIL “OFF” on the third consecutive trip cycle during which the diagnostic has been run and the fault condition is no longer present.
- A history DTC P0404 will clear after 40 consecutive warm-up cycles have occurred without a fault.
- DTC P0404 can be cleared by using the Tech 2 “Clear Info” function or by disconnecting the PCM battery feed.

Diagnostic Aids

Check for the following conditions:

- Excessive carbon deposit on EGR valve shaft may cause EGR stuck open or unsmooth operation. Those carbon deposit may occur by unusual port operation. Clean up carbon may make smooth function of EGR valve.
- Poor connection or damaged harness – Inspect the wiring harness for damage. If the harness appears to be OK, observe the EGR actual position display on the Tech 2 while moving connectors and wiring harnesses related to EGR valve. A change in the display will indicate the location of the fault.

Downloaded from www.Manualslib.com manuals search engine

DTC P0404 – EGR Open Stuck

Step	Action	Value(s)	Yes	No
1	Was the “On-Board Diagnostic (OBD) System Check” performed?	—	Go to *Step 2*	Go to *OBD System Check*
2	1. Ignition “ON,” engine “OFF”, review and record Tech 2 Failure Records Data. 2. Operate the vehicle within Failure Records conditions as noted. 3. Using a Tech 2, monitor “DTC” info for DTC P0404 until the DTC P0404 test runs. Note the result. Does the Tech 2 indicates DTC P0404 failed this ignition?	—	Go to *Step 3*	Refer to *Diagnostic Aids*
3	1. Disconnect the EGR valve harness connector. 2. Inspect the EGR valve and connectors for damaged pin or terminals. Were there any damaged pins or terminals?	—	Go to *Step 4*	Go to *Step 5*
4	Repair the damaged pin or terminal.	—	Verify repair	Is the action complete?
5	1. Remove EGR valve from Engine. 2. Inspect EGR valve whether there is any excessive carbon deposit on EGR shaft. Was excessive carbon deposit on EGR valve shaft?	—	Go to *Step 6*	Go to *Step 7*
6	1. Clean up EGR valve shaft and inside of EGR valve. 2. Visually inspect damage of pintle and seat if is bent, leakage may occur. Was there any severe damage which affects function?	—	Go to *Step 8*	Verify repair Go to *Step 7*
7	1. Reconnect. 2. Ignition “OFF”. 3. Install the Tech 2. 4. Run the engine at idle. 5. On the Tech 2, select EGR Control Test. 6. Use the “UP” arrow to increase the EGR from 0% to 40%. Did EGR work properly?	—	—	Go to *Step 8*
8	Replace the EGR valve. Does DTC P0404 still fail “DTC” test on the Tech 2?	—	Go to *Step 9*	Verify repair
9	Replace the PCM. **IMPORTANT:** The replacement PCM must be programmed. Refer to *On-Vehicle Service* in *Powertrain Control Module and Sensors* for procedures. And also refer to latest Service Bulletin. Check to see if the Latest software is released or not. And then Down Load the LATEST PROGRAMMED SOFTWARE to the replacement PCM. Is the action complete?	—	Verify repair	—

Downloaded from www.Manualslib.com manuals search engine

Diagnostic Trouble Code (DTC) P0405 EGR Low Voltage

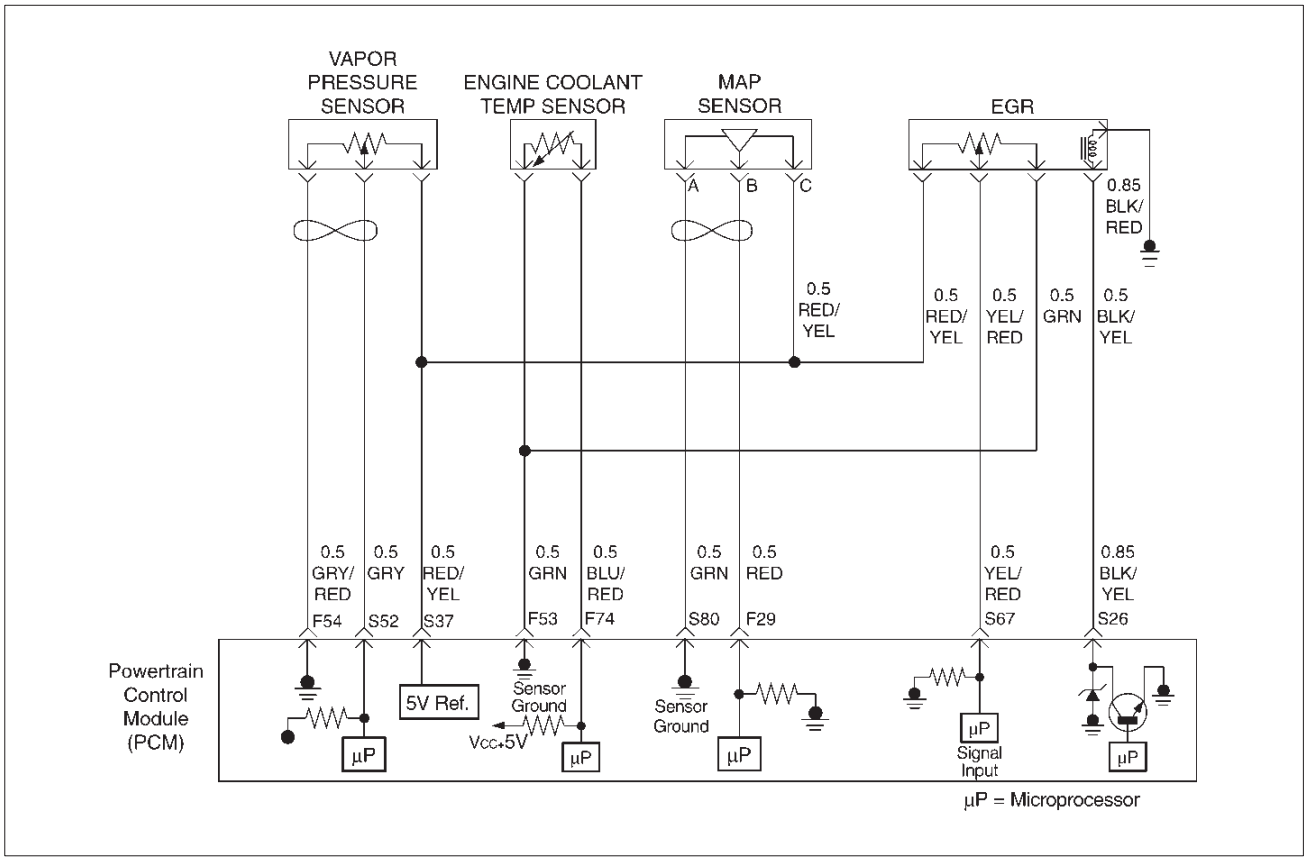

Circuit Description

The powertrain control module (PCM) monitors the EGR valve pintle position input to ensure that the valve responds properly to command from the PCM. If current pintle position voltage indicates less than 0.1 V and last more than 10 seconds, then the PCM will set DTC P0405.

Conditions for Setting the DTC

- Ignition voltage is between 11 and 16 volts.
- EGR pintle position is less than 2% and last more than 10 sec. Action taken when the DTC sets.

Action Taken When the DTC Sets

- The PCM will illuminate the malfunction indicator lamp (MIL) as soon as failure detected.
- The PCM will store conditions which were present when the DTC was set as Freeze Frame and in Failure Records data.

Conditions for Clearing the MIL/DTC

- The PCM will turn the MIL “OFF” on the third consecutive trip cycle during which the diagnostic has been run and the fault condition is no longer present.
- A history DTC P0402 will clear after 40 consecutive warm-up cycles have occurred without a fault.
- DTC P0405 can be cleared by using the Tech 2 “Clear Info” function or by disconnecting the PCM battery feed.

Diagnostic Aids

Check for the following conditions:

- Poor connection or damaged harness – Inspect the wiring harness for damage. If the harness appears to be OK, observe the EGR actual position display on the Tech 2 while moving connectors and wiring harnesses related to EGR valve. A change in the display will indicate the location of the fault.

Downloaded from www.Manualslib.com manuals search engine

DTC P0405 – EGR Low Volt

Step	Action	Value(s)	Yes	No
1	Was the “On-Board Diagnostic (OBD) System Check” performed?	—	Go to *Step 2*	Go to *OBD System Check*
2	1. Ignition “ON,” engine “OFF”, review and record Tech 2 Failure Records Data. 2. Operate the vehicle within Failure Records conditions as noted. 3. Using a Tech 2, monitor “DTC” info for DTC P0405 until the DTC P0405 test runs. Note the result. Does the Tech 2 indicates DTC P0405 failed this ignition?	—	Go to *Step 3*	Refer to *Diagnostic Aids*
3	1. Disconnect the EGR valve harness connector. 2. Inspect the EGR valve and connectors for damaged pin or terminals. Were there any damaged pins or terminals?	—	Go to *Step 4*	Go to *Step 5*
4	Repair the damaged pin or terminal. Is the action complete?	—	Verify repair	—
5	1. Disconnect the EGR harness connector. 2. Ignition “ON”. 3. At the EGR valve, use a DVM to check the voltage at the 5 volt reference wire (RED/YEL) and ground. Did the DVM indicate the specified value?	4–6 V	Go to *Step 6*	Go to *Step 7*
6	1. Disconnect the EGR harness connector. 2. Measure resistance between terminal 5 Volt reference wire and ground. Was resistance in range?	5–5.5 Kμ	Go to *Step 10*	Go to *Step 17*
7	1. Ignition “ON”. 2. At the PCM connector, back prove with a DVM at the 5 volt reference for the EGR valve. Did the DVM indicate the specified value?	4–6 V	Go to *Step 8*	Go to *Step 18*
8	Repair the open 5 volt reference circuit. Is the action complete?	—	Verify repair	—
9	Repair the damaged sensor ground wire. Is the action complete?	—	Verify repair	—
10	1. Disconnect the EGR harness 2. Use an ohmmeter to measure between the pintle position pin and the sensor ground pin on the EGR valve. NOTE: J-35616 Connector Test Adapter Kit may be useful for gaining access to the recessed pins on the valve. Was the ohmmeter reading approximately equal to the specified value?	1 to 1.25 Kμ	Go to *Step 13*	Go to *Step 17*
11	1. Ignition “ON”. 2. Backprobe with a DVM to measure voltage at EGR valve pintle position pin and sensor ground pin. Was voltage in range?	Less than 0.1 V	Go to *Step 17*	Go to *Step 12*

Downloaded from www.Manualslib.com manuals search engine

DTC P0405 – EGR Low Volt (Cont'd)

Step	Action	Value(s)	Yes	No
12	1. Ignition "ON". 2. Backprobe with a DVM to measure voltage at PCM sensor ground pin and pintle position pin. Was voltage in range?	Less than 0.1 V	Go to *Step 13*	Go to *Step 18*
13	1. Ignition "OFF". 2. Disconnect the EGR harness. 3. Check short circuit between EGR pintle position circuit and EGR ground circuit. Was any short circuit?	—	Go to *Step 14*	Go to *Step 18*
14	Locate and repair the short to ground in the pintle position circuit Is the action complete?	—	Verify repair	—
15	1. Ignition "OFF". 2. Disconnect the PCM. 3. Ignition "ON". 4. Measure the voltage between the EGR pintle position circuit and ground. Is the measured voltage near the specified value?	Less than 0.1 V	Go to *Step 17*	Go to *Step 16*
16	Check for a short circuit between other wires and the pintle position circuit Is there any short circuit?	—	Repair short circuit Verify repair	Go to *Step 17*
17	Replace the EGR valve. Does DTC P1404 still fail "DTC test on the Tech 2?	—	Go to *Step 18*	Verify repair
18	Examine the PCM pin and terminal connection. Was there a damaged terminal?	—	Go to *Step 4*	Go to *Step 19*
19	Replace the PCM. **IMPORTANT:** The replacement PCM must be programmed. Refer to *On-Vehicle Service* in *Powertrain Control Module and Sensors* for procedures. And also refer to latest Service Bulletin. Check to see if the Latest software is released or not. And then Down Load the LATEST PROGRAMMED SOFTWARE to the replacement PCM. Is the action complete?	—	Verify repair	—

Downloaded from www.Manualslib.com manuals search engine

Diagnostic Trouble Code (DTC) P0406 EGR High Voltage

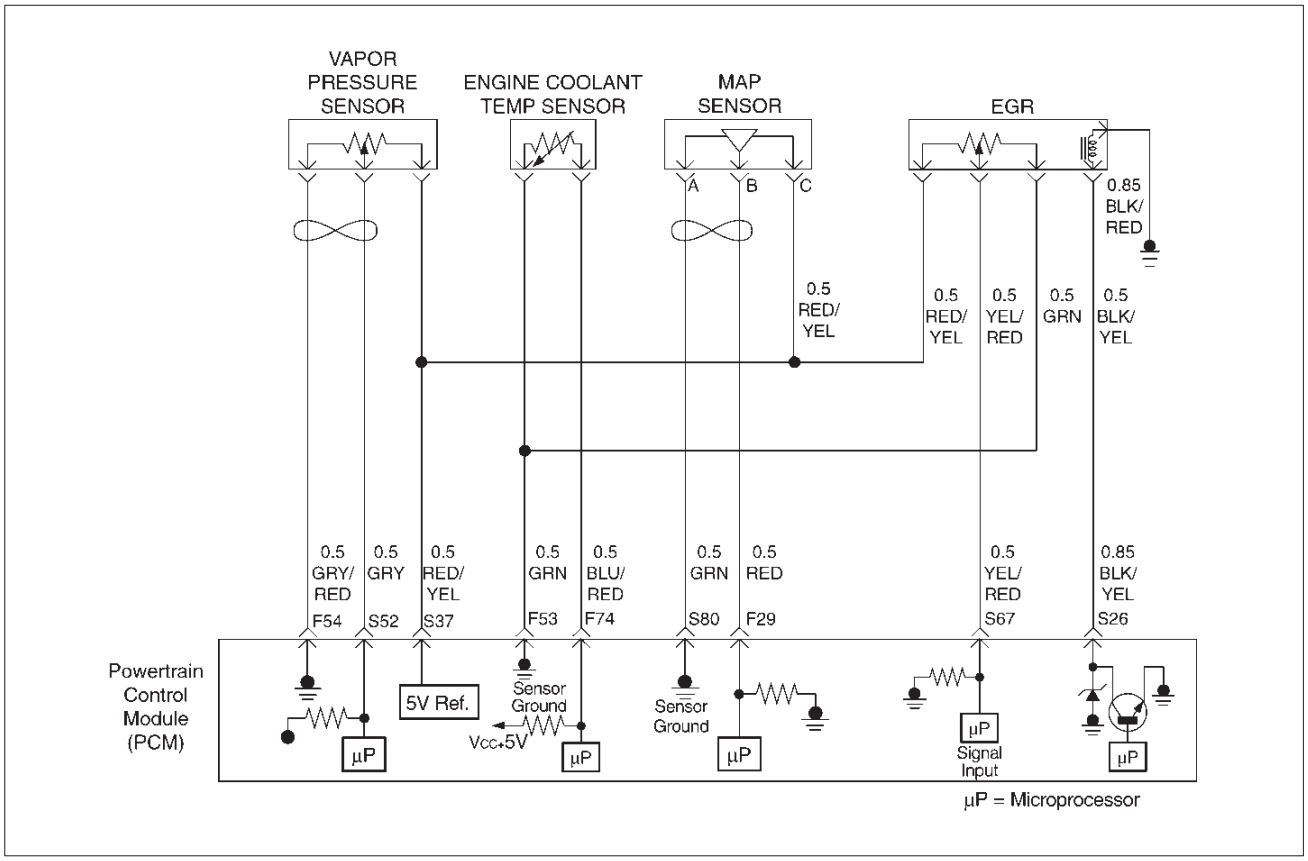

Circuit Description

The powertrain control module (PCM) monitors the EGR valve pintle position input to ensure that the valve responds properly to command from the PCM. If current pintle position voltage indicates more than 4.8 V and last more than 10 seconds, then the PCM will set DTC P0406.

Conditions for Setting the DTC

- Ignition voltage is between 11 and 16 volts.
- EGR pintle position is more than 99% and last more than 10 sec.

Action Taken When the DTC Sets

- The PCM will illuminate the malfunction indicator lamp (MIL) as soon as failure detected.
- The PCM will store conditions which were present when the DTC was set as Freeze Frame and in Failure Records data.

Conditions for Clearing the MIL/DTC

- The PCM will turn the MIL “OFF” on the third consecutive trip cycle during which the diagnostic has been run and the fault condition is no longer present.
- A history DTC P0402 will clear after 40 consecutive warm-up cycles have occurred without a fault.
- DTC P0404 can be cleared by using the Tech 2 “Clear Info” function or by disconnecting the PCM battery feed.

Diagnostic Aids

Check for the following conditions:

- Poor connection or damaged harness – Inspect the wiring harness for damage. If the harness appears to be OK, observe the EGR actual position display on the Tech 2 while moving connectors and wiring harnesses related to EGR valve. A change in the display will indicate the location of the fault.

Downloaded from www.Manualslib.com manuals search engine

DTC P0406 – EGR High Voltage

Step	Action	Value(s)	Yes	No
1	Was the “On-Board Diagnostic (OBD) System Check” performed?	—	Go to *Step 2*	Go to *OBD System Check*
2	1. Ignition “ON,” engine “OFF”, review and record Tech 2 Failure Records Data. 2. Operate the vehicle within Failure Records conditions as noted. 3. Using a Tech 2, monitor “DTC” info for DTC P0406 until the DTC P0406 test runs. Note the result. Does the Tech 2 indicates DTC P0406 failed this ignition?	—	Go to *Step 3*	Refer to *Diagnostic Aids*
3	1. Disconnect the EGR valve harness connector. 2. Inspect the EGR valve and connectors for damaged pin or terminals. Were there any damaged pins or terminals?	—	Go to *Step 4*	Go to *Step 5*
4	Repair the damaged pin or terminal. Is the action complete?	—	Verify repair	Is the action complete?
5	1. Disconnect the EGR harness connector. 2. Ignition “ON”. 3. At the EGR valve, use a DVM to check the voltage at the 5 volt reference wire (RED/YEL). Did the DVM indicate the specified value?	4–6 V	Go to *Step 8*	Go to *Step 6*
6	1. Ignition “ON”. 2. At the PCM connector, backprove with a DVM at the 5 volt reference for the EGR valve. Did the DVM indicate the specified value?	4–6 V	Go to *Step 7*	Go to *Step 16*
7	Repair the open 5 volt reference circuit Is the action complete?	—	Verify repair	—
8	1. Ignition “OFF” 2. Disconnect the EGR harness. 3. Use a DVM to check for an resistance between 5 V reference and Sensor Ground at EGR sensor terminals. NOTE: J-35616 Connector Test Adapter Kit may be useful for gaining access to the recessed pins on the valve. Was the measured resistance in range?	5 to 5 Kμ	Go to *Step 9*	Go to *Step 15*
9	1. Ignition “OFF”. 2. Disconnect the EGR harness. 3. Use a DVM to check for an resistance between Sensor Ground and Signal wire at EGR sensor terminal. Is there an open circuit?	—	Go to *Step 15*	Go to *Step 10*
10	1. Ignition “OFF”. 2. Disconnect the EGR harness at PCM connector. 3. Use a DVM to check for shorted wire between S37 and F53. Is there a shorted wire?	—	Go to *Step 14*	Go to *Step 11*

Downloaded from www.Manualslib.com manuals search engine

DTC P0406 – EGR High Voltage (Cont'd)

Step	Action	Value(s)	Yes	No
11	1. Ignition "ON". 2. Use a DVM to backprove at terminal Connector of EGR valve for voltage. Was measured voltage more than 4.8 V?	more than 4.8 V	Go to *Step 12*	Go to *Step 12*
12	1. Ignition "ON". 2. Stay the EGR harness connected. 3. Check voltage by backproving at PCM S37 terminal. Was voltage more than 4.8 V?	4.8 V	Go to *Step 16*	Go to *Step 13*
13	1. Locate short circuit at EGR harness between RED/YEL to RED/YEL or GRN, YEL/RED to BLK/YEL. 2. Replace EGR harness. Is the action complete?	—	Verify repair	—
14	Replace EGR harness. Is the action complete?	—	Verify repair	—
15	Replace the EGR valve. Does DTC P1404 still fail "DTC test on the Tech 2?	—	Go to *Step 16*	Verify repair
16	Replace the PCM. **IMPORTANT:** The replacement PCM must be programmed. Refer to *On-Vehicle Service* in *Powertrain Control Module and Sensors* for procedures. And also refer to latest Service Bulletin. Check to see if the Latest software is released or not. And then Down Load the LATEST PROGRAMMED SOFTWARE to the replacement PCM. Is the action complete?	—	Verify repair	—

Downloaded from www.Manualslib.com manuals search engine

Diagnostic Trouble Code (DTC) P0420 TWC System Low Efficiency Bank 1

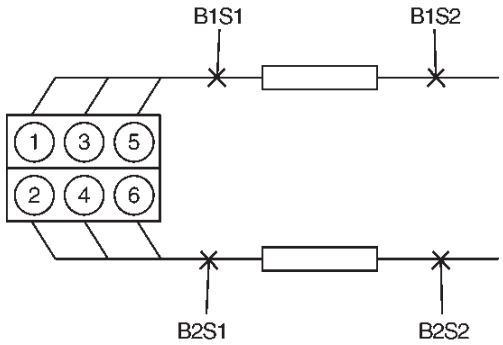

T321075

Circuit Description

To control emissions of hydrocarbons (HC), carbon monoxide (CO), and oxides of nitrogen (NOx), a three-way catalyst (TWC) is used. The catalyst promotes a chemical reaction which oxidizes the HC and CO present in the exhaust gas, converting them into harmless water vapor and carbon dioxide. The catalyst also reduces NOx, converting it to nitrogen. The powertrain control module (PCM) has the ability to monitor this process using the Bank 1 HO2S 1 and the Bank 1 HO2S 2 heated oxygen sensors. The Bank 1 HO2S 1 sensor produces an output signal which indicates the amount of oxygen present in the exhaust gas entering the three-way catalytic converter. The Bank 1 HO2S 2 sensor produces an output signal which indicates the oxygen storage capacity of the catalyst; this in turn indicates the catalyst's ability to convert exhaust gases efficiently. If the catalyst is operating efficiently, the Bank 1 HO2S 1 signal will be far more active than that produced by the Bank 1 HO2S 2 sensor. If the PCM detects a level of Bank 1 HO2S 2 activity that indicates the catalyst is no longer operating efficiently, DTC P0420 will be set.

Conditions for Setting the DTC

- No related DTCs.
- The engine is operating in "closed loop."
- Engine air load is below 99%.
- Engine coolant temperature is between 70˚C (158˚F) and 120˚C (248˚F).
- Mass air flow is between 2.5 g/second and 10 g/second.
- Engine speed is below 200 RPM.
- Catalyst temperature is above 35˚C (662˚F).
- The PCM determines that the catalyst's oxygen storage capacity is below the acceptable threshold.
- Intake Air temperature is between –10˚C (14˚F) and 70˚C (158˚F).

Action Taken When the DTC Sets

- The PCM will illuminate the malfunction indicator lamp (MIL) the first time the fault is detected.
- The PCM will store conditions which were present when the DTC was set as Freeze Frame and in the Failure Records data.

Conditions for Clearing the MIL/DTC

- The PCM will turn the MIL "OFF" on the third consecutive trip cycle during which the diagnostic has been run and the fault condition is no longer present.
- A history DTC P0420 will clear after 40 consecutive warm-up cycles have occurred without a fault.
- DTC P0420 can be cleared by using the Tech 2 "Clear Info" function or by disconnecting the PCM battery feed.

Diagnostic Aids

Check for the following conditions:

- Poor connection at PCM – Inspect harness connectors for backed-out terminals, improper mating, broken locks, improperly formed or damaged terminals, and poor terminal-to-wire connection.
- Damaged harness – Inspect the wiring harness for damage. If the harness appears to be OK, observe the display on the Tech 2 while moving connectors and wiring harnesses related to the sensor. A change in the display will indicate the location of the fault.

Reviewing the Failure Records vehicle mileage since the diagnostic test last failed may help determine how often the condition that caused the DTC to be set occurs. This may assist in diagnosing the condition.

The "TWC Monitor Test Counter" displayed on the Tech 2 may be used to monitor the progress of the TWC diagnostic. To complete the TWC diagnostic with a good catalyst, the counter must be allowed to increment to 49 samples and roll over to 0 at least twice. A failed catalyst will require three or more 50-sample tests to report a failure.

Downloaded from www.Manualslib.com manuals search engine

Test Description

Number(s) below refer to the step number(s) on the Diagnostic Chart.

7. Difficulty completing the DTC P0420 “Status This Ign.” test may be encountered in areas where test conditions cannot be maintained easily, especially in urban areas. To minimize the amount of driving required to complete the DTC P0420 “Status This Ign.” test, use the following procedure:
   - Allow the engine to warm completely.
   - With the vehicle in “Park,” monitor mass air flow on the Tech 2 and hold part throttle to maintain a reading of over 12 g/second for at least 2 minutes. This will achieve the “warm catalyst” required for running the test.
   - Operate the vehicle in second or third gear to remain in the DTC P0420 test conditions described in “Conditions for Setting the DTC” as much as possible. If you must stop the vehicle, maintain the “warm catalyst” criteria as follows:
     – Place the vehicle in “Park” or “Neutral.”
     – Hold part throttle to maintain a mass air flow reading of over 15 g/second for the duration of the stop.

Downloaded from www.Manualslib.com manuals search engine

DTC P0420 – TWC System Low Efficiency Bank 1

Step	Action	Value(s)	Yes	No
1	Was the "On-Board Diagnostic (OBD) System Check" performed?	—	Go to *Step 2*	Go to *OBD System Check*
2	Are any other DTCs set (such as P0140)?	—	Diagnose other DTC(s) first	Go to *Step 3*
3	1. Visually and physically inspect the three-way catalytic converter for damage. Check for the following: ● dents ● severe discoloration caused by excessive temperatures ● holes ● internal rattle caused by damaged catalyst 2. Also, ensure that the three-way catalytic converter is a proper original equipment manufacturer part. Did your inspection reveal a problem?	—	Go to *Step 6*	Go to *Step 4*
4	1. Visually and physically inspect the exhaust system between the three-way catalytic converter and the rear converter flange for leaks, damage, and loose or missing hardware. 2. If a problem is found, repair as necessary. Did your inspection reveal a problem?	—	Go to *Step 7* to verify repair	Go to *Step 5*
5	1. Visually and physically inspect the Bank 1 HO2S 2. 2. Ensure that the Bank 1 HO2S 2 is secure and that the pigtail and wiring harness is not contacting the exhaust pipe or is not otherwise damaged. 3. If a problem is found, repair as necessary. Did your inspection reveal a problem?	—	Go to *Step 7* to verify repair	Go to *Step 6*
6	Replace the three-way catalytic converter. NOTE: Check for conditions which may cause catalyst damage (refer to *Diagnostic Aids*). Is the action complete?	—	Go to *Step 7* to verify repair	—
7	1. Review and record the Tech 2 Failure Records data. 2. Clear DTC P0420. 3. Start the engine and allow it to warm up until the engine coolant temperature monitored on the Tech 2 is above the specified value. 4. Run the engine to maintain the specified mass air flow range for at least 2 minutes. 5. Operate the vehicle to maintain DTC P0420 test conditions (refer to *DTC Test Description* in *Diagnostic Support* for detailed instructions). 6. Using a Tech 2, monitor "DTC" info for DTC P0420 until the DTC P0420 test runs. 7. Note the test result. Does the Tech 2 indicate DTC P0420 passed this ignition?	Engine coolant temp: greater than 60˚C (140˚F). Mass air flow: between 8 g/second and 50 g/second	Repair complete. If a driveability symptom still exists, refer to *Symptoms*.	Go to the *Diagnostic Aids*

Downloaded from www.Manualslib.com manuals search engine

Diagnostic Trouble Code (DTC) P0430 TWC System Low Efficiency Bank 2

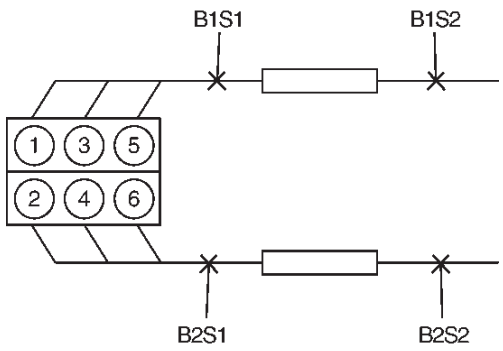

T321075

Circuit Description

To control emissions of hydrocarbons (HC), carbon monoxide (CO), and oxides of nitrogen (NOx), a three-way catalyst (TWC) is used. The catalyst promotes a chemical reaction which oxidizes the HC and CO present in the exhaust gas, converting them into harmless water vapor and carbon dioxide. The catalyst also reduces NOx, converting it to nitrogen. The powertrain control module (PCM) has the ability to monitor this process using the Bank 2 HO2S 1 and the Bank 2 HO2S 2 heated oxygen sensors. The Bank 2 HO2S 1 sensor produces an output signal which indicates the amount of oxygen present in the exhaust gas entering the three-way catalytic converter. The Bank 2 HO2S 2 sensor produces an output signal which indicates the oxygen storage capacity of the catalyst; this in turn indicates the catalyst's ability to convert exhaust gases efficiently. If the catalyst is operating efficiently, the Bank 2 HO2S 1 signal will be far more active than that produced by the Bank 2 HO2S 2 sensor. If the PCM detects a level of Bank 2 HO2S 2 activity that indicates the catalyst is no longer operating efficiently, DTC P0430 will be set.

Conditions for Setting the DTC

- No related DTCs.
- The engine is operating in "closed loop."
- Engine air load is below 99%.
- Engine coolant temperature is between 70˚C (158˚F) and 115˚C (239˚F).
- Mass air flow is between 2.5 g/second and 10 g/second.
- Change in engine load is below 8%.
- Engine speed is below 200 RPM.
- Catalyst temperature is above 350˚C (662˚F).
- The PCM determines that the catalyst's oxygen storage capacity is below the acceptable threshold.
- Intake Air temperature is between –20˚C (4˚F) and 70˚C (158˚F).

Action Taken When the DTC Sets

- The PCM will illuminate the malfunction indicator lamp (MIL) the first time the fault is detected.
- The PCM will store conditions which were present when the DTC was set as Freeze Frame and in the Failure Records data.

Conditions for Clearing the MIL/DTC

- The PCM will turn the MIL "OFF" on the third consecutive trip cycle during which the diagnostic has been run and the fault condition is no longer present.
- A history DTC P0430 will clear after 40 consecutive warm-up cycles have occurred without a fault.
- DTC P0430 can be cleared by using the Tech 2 "Clear Info" function or by disconnecting the PCM battery feed.

Downloaded from www.Manualslib.com manuals search engine

Diagnostic Aids

Check for the following conditions:

- Poor connection at PCM – Inspect harness connectors for backed-out terminals, improper mating, broken locks, improperly formed or damaged terminals, and poor terminal-to-wire connection.
- Damaged harness – Inspect the wiring harness for damage. If the harness appears to be OK, observe the display on the Tech 2 while moving connectors and wiring harnesses related to the sensor. A change in the display will indicate the location of the fault.

Reviewing the Failure Records vehicle mileage since the diagnostic test last failed may help determine how often the condition that caused the DTC to be set occurs. This may assist in diagnosing the condition.

Test Description

Number(s) below refer to the step number(s) on the Diagnostic Chart.

7. Difficulty completing the DTC P0430 “Status This Ign.” test may be encountered in areas where test conditions cannot be maintained easily, especially in urban areas. To minimize the amount of driving required to complete the DTC P0430 “Status This Ign.” test, use the following procedure:
   - Allow the engine to warm completely.
   - With the vehicle in “Park,” monitor mass air flow on the Tech 2 and hold part throttle to maintain a reading of over 12 g/second for at least 2 minutes. This will achieve the “warm catalyst” required for running the test.
   - Operate the vehicle in second or third gear to remain in the DTC P0430 test conditions described in “Conditions for Setting the DTC” as much as possible. If you must stop the vehicle, maintain the “warm catalyst” criteria as follows:
     - Place the vehicle in “Park” or “Neutral.”
     - Hold part throttle to maintain a mass air flow reading of over 15 g/second for the duration of the stop.

The “TWC Monitor Test Counter” displayed on the Tech 2 may be used to monitor the progress of the TWC diagnostic. To complete the TWC diagnostic with a good catalyst, the counter must be allowed to increment to 49 samples and roll over to 0 at least twice.

Downloaded from www.Manualslib.com manuals search engine

DTC P0430 – TWC System Low Efficiency Bank 2

Step	Action	Value(s)	Yes	No
1	Was the "On-Board Diagnostic (OBD) System Check" performed?	—	Go to *Step 2*	Go to *OBD System Check*
2	Are any other DTCs set (such as P0160)?	—	Diagnose other DTC(s) first	Go to *Step 3*
3	1. Visually and physically inspect the three-way catalytic converter for damage. Check for the following: ● dents ● severe discoloration caused by excessive temperatures ● holes ● internal rattle caused by damaged catalyst 2. Also, ensure that the three-way catalytic converter is a proper original equipment manufacturer part. Did your inspection reveal a problem?	—	Go to *Step 6*	Go to *Step 4*
4	1. Visually and physically inspect the exhaust system between the three-way catalytic converter and the rear converter flange for leaks, damage, and loose or missing hardware. 2. If a problem is found, repair as necessary. Did your inspection reveal a problem?	—	Go to *Step 7* to verify repair	Go to *Step 5*
5	1. Visually and physically inspect the Bank 2 HO2S 2. 2. Ensure that the Bank 2 HO2S 2 is secure and that the pigtail and wiring harness is not contacting the exhaust pipe or is not otherwise damaged. 3. If a problem is found, repair as necessary. Did your inspection reveal a problem?	—	Go to *Step 7* to verify repair	Go to *Step 6*
6	Replace the three-way catalytic converter. NOTE: Check for conditions which may cause catalyst damage (refer to *Diagnostic Aids*). Is the action complete?	—	Go to *Step 7* to verify repair	—
7	1. Review and record the Tech 2 Failure Records data. 2. Clear DTC P0430. 3. Start the engine and allow it to warm up until the engine coolant temperature monitored on the Tech 2 is above the specified value. 4. Run the engine to maintain the specified mass air flow range for at least 6 minutes. 5. Operate the vehicle to maintain DTC P0430 test conditions (refer to *DTC Test Description* in *Diagnostic Support* for detailed instructions). 6. Using a Tech 2, monitor "DTC" info for DTC P0430 until the DTC P0430 test runs. 7. Note the test result. Does the Tech 2 indicate DTC P0430 passed this ignition?	Engine coolant temp: greater than 70°C (158°F). Mass air flow: between 2.5 g/second and 10 g/second	Repair complete. If a driveability symptom still exists, refer to *Symptoms*.	Go to the *Diagnostic Aids*

Downloaded from www.Manualslib.com manuals search engine

Diagnostic Trouble Code (DTC) P0440 EVAP System

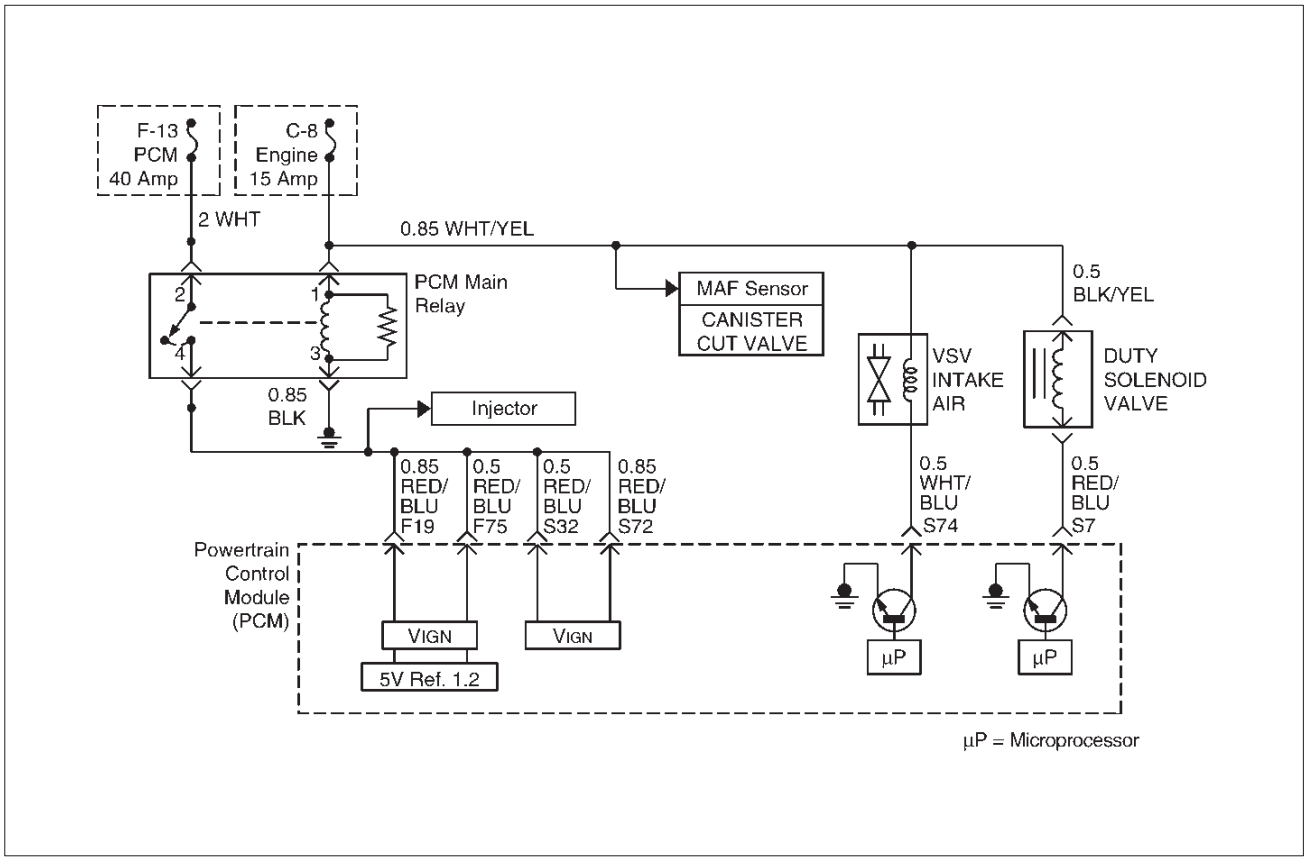

D06RY00128

Circuit Description

The evaporative system includes the following components:

- Fuel tank
- EVAP canister duty solenoid valve
- Fuel tank pressure sensor
- Fuel pipes and hoses
- Vapor lines
- Fuel cap
- Evaporative emissions canister
- Purge lines
- EVAP canister cut valve (purge solenoid)

The evaporative leak detection diagnostic strategy is based on applying vacuum to the EVAP system and monitoring vacuum decay. The powertrain control module (PCM) monitors vacuum level via the fuel tank pressure sensor input. At an appropriate time, the EVAP canister purge solenoid and the EVAP canister vent solenoid are turned "ON," allowing engine vacuum to draw a small vacuum on the entire evaporative emissions system. If a sufficient vacuum level cannot be achieved, a large leak or a faulty EVAP canister purge solenoid is indicated. This can be caused by the following conditions:

- Disconnected or faulty fuel tank pressure sensor
- Missing or faulty fuel cap
- Disconnected, damaged, pinched, or blocked EVAP purge line
- Disconnected or damaged EVAP vent hose
- Disconnected, damaged, pinched, or blocked fuel tank vapor line
- Disconnected or faulty EVAP canister cut valve
- Disconnected or faulty EVAP canister duty solenoid valve
- Open ignition feed circuit to the EVAP canister vent solenoid or the EVAP canister cut valve
- Damaged EVAP canister
- Leaking fuel sender assembly O-ring
- Leaking fuel tank or fuel filler neck

Any of the above conditions can set DTC P0440.

Conditions for Setting the DTC

- No TP sensor, IAT sensor, or MAP sensor DTCs set.
- Start-up engine coolant temperature is less than 32˚C (90˚F).
- Start-up engine coolant temperature is not more than 7˚C (13˚F) greater than start-up intake air temperature.
- Start-up intake air temperature is greater than 4˚C (39˚F) .
- Start-up intake air temperature is not more than 2˚C (4˚F) greater than start-up engine coolant temperature.
- Vehicle speed is less than 5 mph (8 km/h).
- Throttle position is greater than 3%.
- Minimal fuel slosh.
- BARO is greater than 70 kPa.

Downloaded from www.Manualslib.com manuals search engine

- The EVAP system is unable to achieve or maintain vacuum during the diagnostic test.
- Above conditions are present for 60 to 180 seconds.

Action Taken When the DTC Sets

- The PCM will illuminate the MIL during the second key cycle in which the DTC sets.
- The PCM will store conditions which were present when the DTC set as Freeze Frame and in the Failure Records data.

Conditions for Clearing the MIL/DTC

- The PCM will turn the MIL "OFF" when the diagnostic has been run and the fault condition is no longer present.
- A history DTC P0440 will clear after 40 consecutive warm-up cycles have occurred without a fault.
- DTC P0440 can be cleared by using the Tech 2 "Clear Info" function or by disconnecting the PCM battery feed.

Diagnostic Aids

Check for the following conditions:

- Cracked or punctured EVAP canister.
- Damaged or disconnected source vacuum line, EVAP purge line, vent hose or fuel tank vapor line.
- Poor connection at PCM – Inspect harness connectors for backed-out terminals, improper mating, broken locks, improperly formed or damaged terminals, and poor terminal to wire connection.
- Damaged harness–Inspect the wiring harness to the EVAP canister vent solenoid, EVAP canister purge solenoid and the fuel tank pressure sensor for an intermittent open or short circuit.
- Kinked, pinched, or plugged vacuum source, EVAP purge, or fuel tank vapor line–Verify that the lines are not restricted.

Reviewing the Failure Records vehicle mileage since the diagnostic test last failed may help determine how often the condition that caused the DTC to be set occurs. This may assist in diagnosing the condition.

Test Description

Number(s) below refer to the step number(s) on the Diagnostic Chart.

2. If an EVAP canister vent solenoid or an EVAP canister purge solenoid electrical fault is present, the purge system will not operate correctly. Repairing the electrical fault will very likely correct the condition that set DTC P0440.
3. Checks the fuel tank pressure sensor at ambient pressure.
4. Determines whether or not the EVAP system can be sealed sufficiently to be pressurized. If not, the large leak must be located and corrected before continuing with diagnosis.
5. Verifies that the fuel tank pressure sensor accurately reacts to EVAP system pressure changes.
8. Checks for a blocked EVAP canister purge solenoid. The PCM commands the EVAP canister purge solenoid "OFF" (open) and the vent solenoid "ON" (closed) with the Tech 2 "System Perf." EVAP output control function activated. Any pressure in the system should be released through the EVAP canister purge solenoid within a few seconds when "System Perf." is activated.
9. Ensures that sufficient source vacuum is present at the EVAP canister purge solenoid.

DTC P0440 – EVAP System

Step	Action	Value(s)	Yes	No
1	Was the "On-Board Diagnostic (OBD) System Check" performed?	—	Go to *Step 2*	Go to *OBD System Check*
2	Is DTC P0452 or P0453 also set?	—	Go to *other DTC first*	Go to *Step 3*
3	1. Ignition "OFF." 2. Remove the fuel cap. 3. Ignition "ON." 4. Observe "Fuel Tank Pressure" on the Tech 2. Does the Tech 2 indicate "Fuel Tank Pressure" at the specified value?	1.51 V	Go to *Step 4*	Go to *DTC P0452* or *DTC P0453*
4	1. Replace the fuel cap. 2. Engine is running. 3. Observe "Fuel Tank Vacuum" on the Tech 2. Does Tech 2 indicate "Fuel Tank Vacuum" at the specified value?	1.47–1.51 V	Go to *Step 7*	Go to *Step 6*

Downloaded from www.Manualslib.com manuals search engine

DTC P0440 – EVAP System (Cont'd)

Step	Action	Value(s)	Yes	No
5	1. Ignition "OFF". 2. Disconnect the fuel tank vapor line and the EVAP purge line from the EVAP canister. 3. Block the canister fitting for the fuel tank vapor line. 4. Connect a hand vacuum pump to the canister fitting for the EVAP purge line. 5. Ensure that the EVAP canister vent solenoid is still commanded "ON" (closed). 6. Attempt to apply vacuum to the EVAP canister. Observe "Fuel tank pressure" on the Tech 2. Does the Tech 2 indicate "Fuel tank pressure" at the specified value?	1.47–1.51 V	Go to *Step 8*	Go to *Step 7*
6	1. Visually/physically check for the following conditions: ● Restricted fuel tank vapor line. ● Restricted EVAP purge line. 2. If a problem is found, repair as necessary. Was a problem found?	—	Verify repair	Go to *DTC P0452* or *DTC P0453*
7	1. Visually/physically check for the following conditions: ● Vent hose disconnected or the damaged. ● EVAP canister damaged. 2. If a problem is found, repair as necessary. Was a problem found?	—	Verify repair	Go to *Step 11*
8	1. Visually/physically check for the following conditions: ● Missing or faulty fuel cap. ● Disconnected or leaking fuel tank vapor line. ● Disconnected or damaged EVAP purge line. 2. If a problem is found, repair as necessary. Was a problem found?	—	Verify repair	Go to *Step 9*
9	Replace the EVAP canister purge solenoid. Is the action complete?	—	Verify repair	—
10	Locate and repair cause of no source vacuum to the EVAP canister purge solenoid. Is the action complete?	—	Verify repair	—
11	Replace the EVAP canister vent solenoid. Is the action complete?	—	Verify repair	—

Downloaded from www.Manualslib.com manuals search engine

Diagnostic Trouble Code (DTC) P0442 EVAP System Small Leak Detected

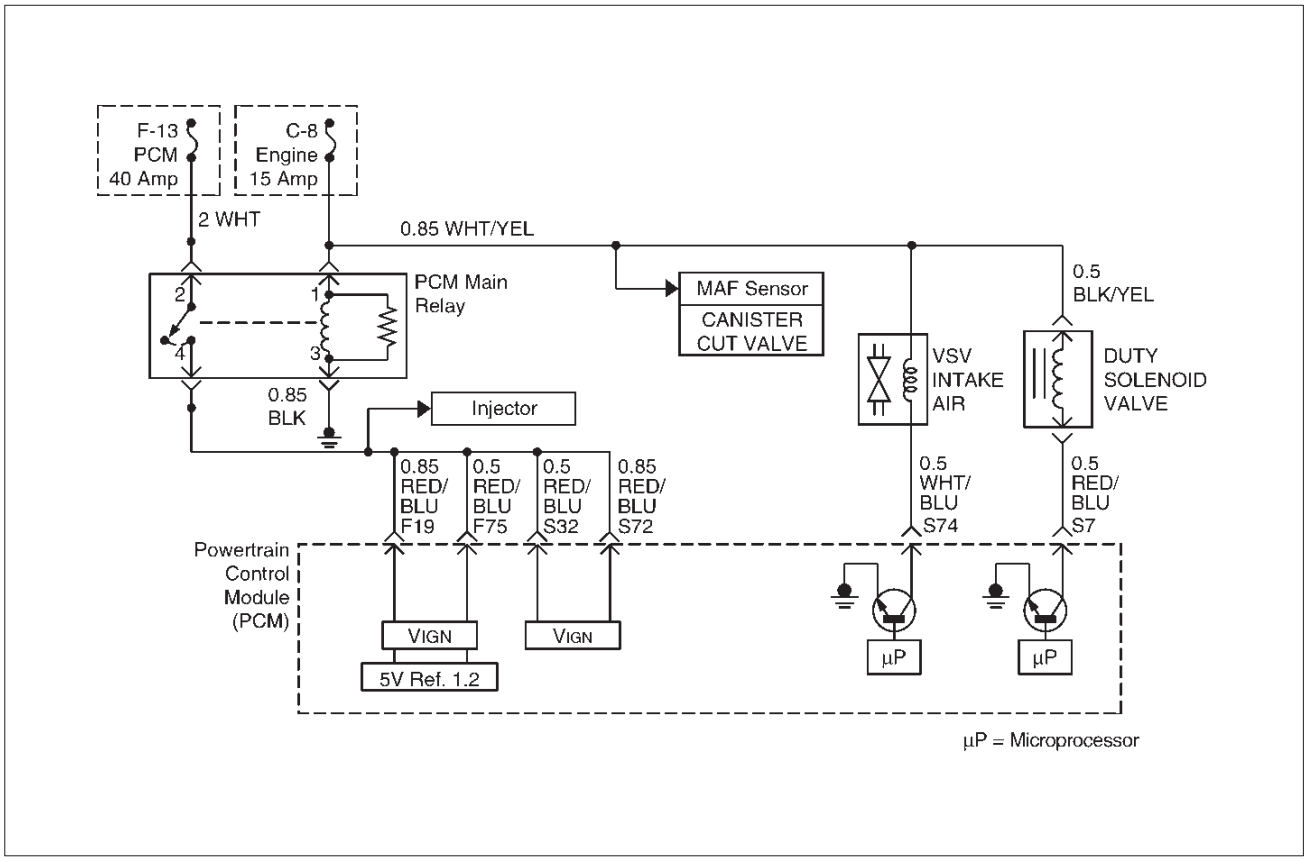

D06RY00128

Circuit Description

The evaporative system includes the following components:

- Fuel tank
- EVAP canister vent solenoid
- Fuel tank pressure sensor
- Fuel pipes and hoses
- Vapor lines
- Fuel cap
- Evaporative emissions canister
- Purge lines
- EVAP canister purge solenoid

The evaporative leak detection diagnostic strategy is based on applying vacuum to the EVAP system and monitoring vacuum decay. The powertrain control module (PCM) monitors vacuum level via the fuel tank pressure sensor input. At an appropriate time, the EVAP canister purge solenoid and the EVAP canister vent solenoid are turned “ON,” allowing engine vacuum to draw a small vacuum on the entire evaporative emissions system. After the desired vacuum level has been achieved, the EVAP canister purge solenoid is turned “OFF,” sealing the system. A leak is detected by monitoring for a decrease in vacuum level over a given time period, all other variables remaining constant. A small leak in the system will cause DTC P0442 to be set.

Conditions for Setting the DTC

- No TP sensor, ECT sensor, Tank pressure sensor, IAT sensor, or MAP sensor DTCs set.
- The DTC P0440 diagnostic test has passed.
- A vacuum decay condition, indicating a small leak, is detected during the diagnostic test.

Action Taken When the DTC Sets

- The PCM will illuminate the malfunction indicator lamp (MIL) during the second key cycle in which the DTC sets.
- The PCM will store conditions which were present when the DTC was set as Freeze Frame and in the Failure Records data.

Conditions for Clearing the MIL/DTC

- The PCM will turn the MIL “OFF” on the third consecutive trip cycle during which the diagnostic has been run and the fault condition is no longer present.
- A history DTC P0442 will clear after 40 consecutive warm-up cycles have occurred without a fault.
- DTC P0442 can be cleared by using the Tech 2 “Clear Info” function or by disconnecting the PCM battery feed.

Diagnostic Aids

Check for the following conditions:

- Cracked or punctured EVAP canister.
- Damaged source vacuum line, EVAP purge line, EVAP vent hose or fuel tank vapor line.

Downloaded from www.Manualslib.com manuals search engine

- Poor connection at PCM – Inspect harness connectors for backed-out terminals, improper mating, broken locks, improperly formed or damaged terminals, and poor terminal to wire connection.
- Damaged harness–Inspect the wiring harness to the EVAP canister vent solenoid, EVAP canister purge solenoid and the fuel tank pressure sensor for an intermittent open or short circuit.

Reviewing the Failure Records vehicle mileage since the diagnostic test last failed may help determine how often the condition that caused the DTC to be set occurs. This may assist in diagnosing the condition.

Test Description

Number(s) below refer to the step number(s) on the Diagnostic Chart.

2. If an EVAP canister vent solenoid or an EVAP canister purge solenoid electrical fault is present, the purge system will not operate correctly. Repairing the electrical fault will very likely correct the condition that set DTC P0442.
3. Checks the fuel tank pressure sensor at ambient pressure.
4. Verifies that the fuel tank pressure sensor accurately reacts to EVAP system pressure changes.

DTC P0442 – EVAP System Leak Detected

Step	Action	Value(s)	Yes	No
1	Was the “On-Board Diagnostic (OBD) System Check” performed?	—	Go to *Step 2*	Go to *OBD System Check*
2	1. Ignition “OFF.” 2. Remove the fuel cap. 3. Ignition “ON.” 4. Observe “Fuel Tank Pressure” on the Tech 2. Does the Tech 2 indicate “Fuel Tank Pressure” at the specified value?	1.51V	Go to *Step 3*	Go to *Fuel Tank Pressure System*
3	**IMPORTANT:** Before continuing with diagnosis, zero the EVAP pressure and vacuum gauges on EVAP pressure/purge cart J 41413 (refer to tool operating instructions). 1. Replace the fuel cap. 2. Capture Failure Records data for DTC P0442 and clear DTCs. 3. Connect the EVAP pressure/purge cart J 41413 to the EVAP service port. 4. Using the Tech 2, command the EVAP canister vent solenoid “ON” (closed). 5. Using the EVAP pressure/purge cart J 41413, pressurize the EVAP system to the specified value. 6. Observe “Fuel Tank Pressure” on the Tech 2. Does the Tech 2 indicate “Fuel Tank Pressure” at the specified value?	1.47V	Go to *Step 4*	Go to *Fuel Tank Pressure System*
4	1. Ignition “ON,” engine idling. 2. Using the Tech 2, command the EVAP canister vent solenoid “ON” (closed). 3. Using the EVAP pressure/purge cart J 41413, pressurize the EVAP system to 15 in. H2O. 4. Switch the rotary switch on the cart to “HOLD” and observe the EVAP pressure gauge. Does the pressure decrease to less than the specified value within 2 minutes?	1.47 – 1.51V	Go to *Step 5*	Refer to *Diagnostic Aids*

Downloaded from www.Manualslib.com manuals search engine

DTC P0442 – EVAP System Leak Detected (Cont'd)

Step	Action	Value(s)	Yes	No
5	1. Disconnect the fuel tank vapor line and the EVAP purge line from the EVAP canister. 2. Block the canister fitting for the fuel tank vapor line. 3. Connect a hand vacuum pump to the canister fitting for the EVAP purge line. 4. Ensure that the EVAP canister vent solenoid is still commanded "ON" (closed). 5. Attempt to apply vacuum to the EVAP canister. Can the vacuum be maintained at the specific value?	1.46V	Go to *Step 8*	Go to *Step 6*
6	1. Visually/physically check for the following conditions: ● Vent hose disconnected or damaged. ● EVAP canister damaged. 2. If a problem is found, repair as necessary. Was a problem found?	—	Go to *Step 10*	Go to *Step 7*
7	Replace the EVAP canister vent solenoid. Is the action complete?	—	Go to *Step 10*	—
8	1. Visually/physically check for the following conditions: ● Missing or faulty fuel cap. ● Disconnected or leaking fuel tank vapor line. ● Disconnected or damaged EVAP purge line. 2. If a problem is found, repair as necessary. Was a problem found?	—	Go to *Step 10*	Go to *Step 9*
9	1. Using Tech 2, command the EVAP canister vent solenoid "ON" (closed). 2. With the cart connected to the EVAP service port, continuously attempt to pressurize the EVAP system by leaving the cart control knob in the pressurize position. 3. Using ultrasonic leak detector J 41416, locate and repair leak in EVAP system. (It may be necessary to partially lower the fuel tank to examine the connections on top of the tank.) Is the action complete?	—	Go to *Step 10*	—
10	1. Ignition "ON," engine not running. 2. Using the Tech 2, command the EVAP canister vent solenoid "ON" (closed). 3. Using the EVAP pressure/purge cart J 41413, pressurize and monitor the EVAP system to 15 in. H2O. 4. Switch the rotary switch on the cart to "HOLD" and observe the EVAP pressure gauge. Does the pressure decrease to less than the specified value within 2 minutes?	2.14V	Go to *Step 2*	Verify repair

Downloaded from www.Manualslib.com manuals search engine

Diagnostic Trouble Code (DTC) P0446 EVAP Canister Vent Blocked

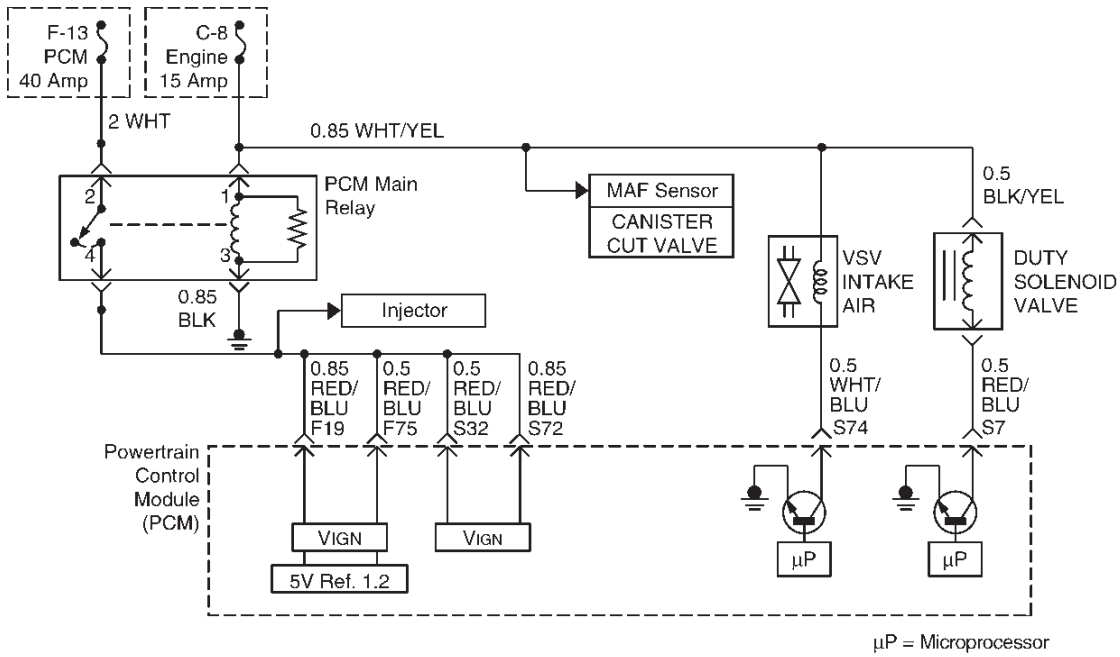

D06RY00128

Circuit Description

The evaporative system includes the following components:

- Fuel tank
- EVAP canister vent solenoid
- Fuel tank pressure sensor
- Fuel pipes and hoses
- Vapor lines
- Fuel cap
- Evaporative emissions canister
- Purge lines
- EVAP canister purge solenoid

An incorrect fuel tank pressure sensor signal is detected by monitoring fuel tank pressure when the key is first turned “ON” during a cold start. If the fuel tank pressure signal is out of range, DTC P0446 will set. A restricted or blocked EVAP vent path is detected by monitoring fuel tank pressure during normal operation (EVAP canister vent solenoid open, EVAP canister purge solenoid normal). With the EVAP canister vent solenoid open, vacuum level in the system should be very low unless the vent path is blocked. A blockage can be caused by the following condition:

- Faulty EVAP canister vent solenoid (stuck closed).
- Plugged, kinked or pinched vent hose.
- Shorted EVAP canister vent solenoid driver circuit.
- Plugged evaporative canister.

If any of these conditions are present, DTC P0446 will set.

Conditions for Setting the DTC

- No TP sensor, ECT sensor, Tank pressure sensor, IAT sensor, or MAP sensor DTCs set.
- Start-up engine coolant temperature is less than 32˚C (90˚F).
- Start-up engine coolant temperature is not more than 7˚C (13˚F) greater than start-up intake air temperature.
- Vehicle speed is less than 75 mph (120 km/h).
- Throttle position is greater than 7% but less than 30%.
- Minimal fuel slosh.
- Fuel tank level is between 10% and 90%.
- BARO is greater than 70 kPa.

Action Taken When the DTC Sets

- The PCM will illuminate the MIL during the second key cycle in which the DTC sets.
- The PCM will store conditions which were present when the DTC set as Freeze Frame and Failure Records data.

Conditions for Clearing the MIL/DTC

- The PCM will turn the MIL “OFF” on the third consecutive trip cycle during which the diagnostic has been run and the fault condition is no longer present.
- A history DTC P0446 will clear after 40 consecutive warm-up cycles have occurred without a fault.

Downloaded from www.Manualslib.com manuals search engine

- DTC P0446 can be cleared by using the Tech 2 “Clear Info” function or by disconnecting the PCM battery feed.

Diagnostic Aids

Check for the following conditions:

- Poor connection at PCM – Inspect harness connectors for backed-out terminals, improper mating, broken locks, improperly formed or damaged terminals, and poor terminal to wire connection.
- Damaged harness–Inspect the wiring harness to the EVAP canister vent solenoid, EVAP canister purge solenoid and the fuel tank pressure sensor for an intermittent open or short circuit.
- Kinked, pinched, or plugged vent hose–Verify that the vent hose between the EVAP canister and EVAP canister vent solenoid is not restricted.

Reviewing the Failure Records vehicle mileage since the diagnostic test last failed may help determine how often the condition that caused the DTC to be set occurs. This may assist in diagnosing the condition.

Test Description

Number(s) below refer to the step number(s) on the Diagnostic Chart.

2. If a vent solenoid electrical fault is present, the purge system will not operate correctly. Repairing the electrical fault will very likely correct the condition that set DTC P0446.
3. Checks the fuel tank pressure sensor at ambient pressure.
4. Verifies that the fuel tank pressure sensor accurately reacts to EVAP system pressure changes.
6. Checks for a blocked EVAP canister.

DTC P0446– EVAP Canister Vent Blocked

Step	Action	Value(s)	Yes	No
1	Was the “On-Board Diagnostic (OBD) System Check” performed?	—	Go to *Step 2*	Go to *OBD System Check*
2	1. Ignition “ON.” 2. Capture Failure Records data for DTC P0446 and clear DTCs. 3. Ignition “OFF.” 4. Remove the fuel cap. 5. Ignition “ON.” 6. Observe “Fuel Tank Pressure” on the Tech 2. Does Tech 2 indicate “Fuel Tank Pressure” at the specified value?	1.51V	Go to *Step 3*	Go to *Fuel Tank Pressure System*
3	**IMPORTANT:** Before continuing with diagnosis, zero the EVAP pressure and vacuum gauges on the EVAP pressure/purge cart J 41413 (refer to tool operating instructions). 1. Replace the fuel cap. 2. Using the Tech 2, command the EVAP vent solenoid “ON” (closed). 3. Connect the EVAP pressure/purge cart J 41413 to the EVAP service port. 4. Using the EVAP pressure/purge cart J 41413, pressurize the EVAP system to the specified value. 5. Observe “Fuel Tank Pressure” on the Tech 2. Does Tech 2 indicate “Fuel Tank Pressure” at the specified value?	1.52 – 1.69V	Go to *Step 4*	Go to *Fuel Tank Pressure System*
4	1. Maintain the EVAP pressure at 5 in. at H2O. 2. Using Tech 2, command the EVAP vent solenoid “OFF” (open) while observing the EVAP pressure gauge on the cart J 41413. Does the EVAP pressure return to the specified value within 5 seconds?	0 in. H2O	Refer to *Diagnostic Aids*	Go to *Step 5*

Downloaded from www.Manualslib.com manuals search engine

DTC P0446– EVAP Canister Vent Blocked (Cont'd)

Step	Action	Value(s)	Yes	No
5	1. Disconnect the large vent hose (marked "AIR") from the EVAP canister. 2. Switch the rotary switch on the cart J 41413 to "PURGE." 3. Ignition "ON," engine idling at normal operating temperature. 4. Observe vacuum gauge for 5 seconds while holding the engine speed at 2500 RPM. Does the vacuum remain less than the specified value?	30 in. H2O	Go to *Step 6*	Go to *Step 8*
6	1. Inspect the vent hose between the EVAP canister and the EVAP canister vent solenoid for kinks, pinched areas, or any other form of blockage. 2. If a problem is found, repair as necessary. Was a problem found?	—	Go to *Step 9*	Go to *Step 7*
7	Replace the EVAP canister vent solenoid. Is the action complete?	—	Go to *Step 9*	—
8	Replace the EVAP canister. Is the action complete?	—	Go to *Step 9*	—
9	1. Using Tech 2, command the EVAP canister vent solenoid "ON" (closed). 2. Using the EVAP pressure/purge cart J 41413, pressurize and monitor the EVAP system to 15 in. H2O. 3. Switch the rotary switch on cart J 41413 to "HOLD." 4. Using the Tech 2, command the EVAP canister vent solenoid "OFF" (open) while observing the EVAP pressure gauge on cart J 41413. Does the EVAP pressure return to the specified value within 5 seconds?	0 in. H^2O	Verify repair	Go to *Step 2*

Downloaded from www.Manualslib.com manuals search engine

Diagnostic Trouble Code (DTC)
P0452 Fuel Tank Pressure Sensor (Vapor Pressure Sensor) Low Voltage

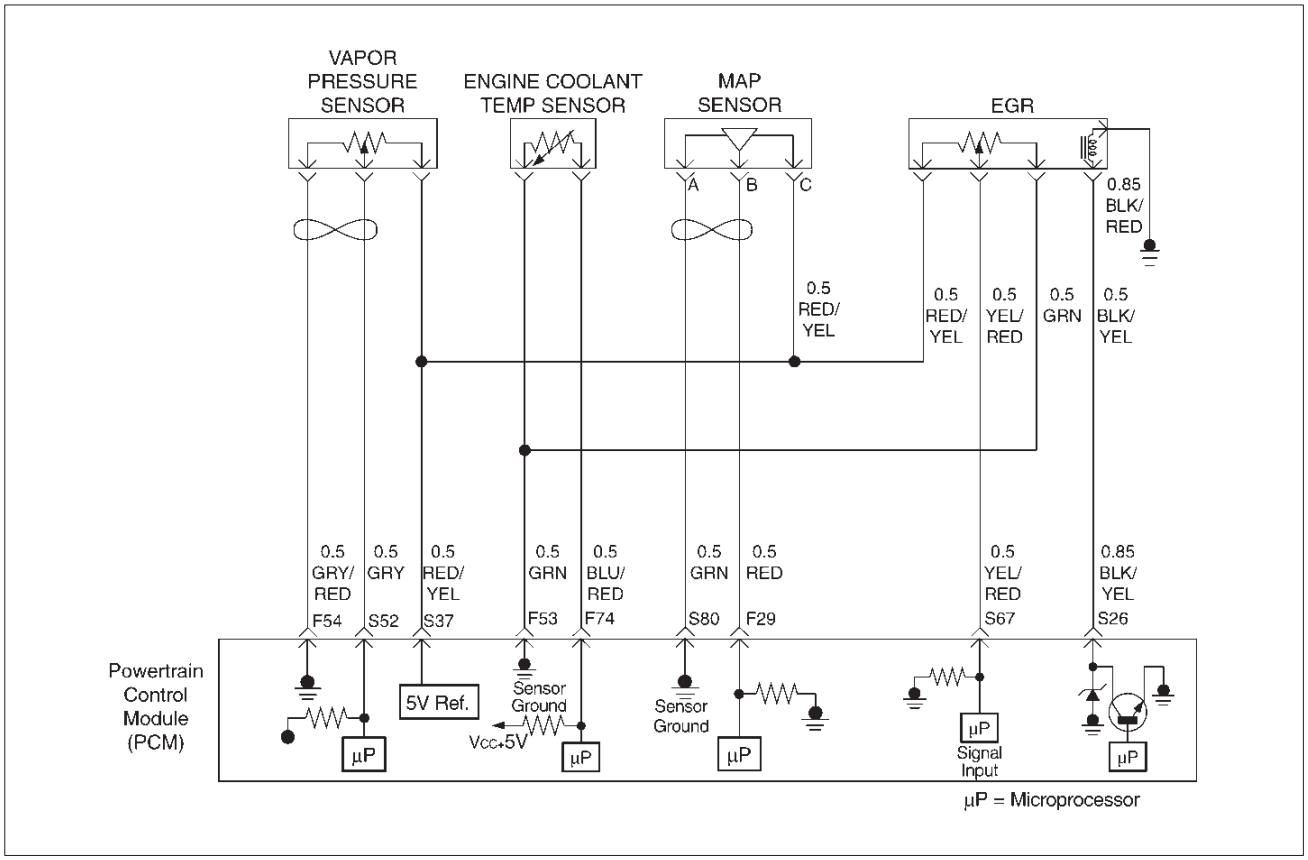

D06RY00178

Circuit Description

The powertrain control module (PCM) monitors fuel tank pressure sensor (Vapor pressure sensor) of the Enhanced Evapo system. When the tank pressure output indicates low voltage, PCM will set DTC P0452.

Conditions for Setting the DTC

- Tank sensor output is less than 0.2 volts for 12.5 sec.
- 100 test failures within a 200 tests.

Action Taken When the DTC Sets

- The PCM will illuminate the malfunction indicator lamp (MIL) as soon as failure detected.
- The PCM will store conditions which were present when the DTC was set as Freeze Frame and in Failure Records data.

Conditions for Clearing the MIL/DTC

- The PCM will turn the MIL “OFF” on the third consecutive trip cycle during which the diagnostic has been run and the fault condition is no longer present.
- A history DTC P0402 will clear after 40 consecutive warm-up cycles have occurred without a fault.
- DTC P0404 can be cleared by using the Tech 2 “Clear Info” function or by disconnecting the PCM battery feed.

Diagnostic Aids

Check for the following conditions:

- Open circuit of 5 volt reference line – Inspect wiring harness from PCM to the sensor. The PCM turns P0452, and P0107 at the same time.
- Open circuit or short circuit to ground line – Inspect wiring harness from PCM to the sensor. The PCM turns P0452 and P0107 at the same time.
- Tank fuel pressure sensor malfunction may cause P0452.

Reviewing the Failure Records vehicle mileage since the diagnostic test last failed may help determine how often the condition that caused the DTC to be set occurs. This may assist in diagnosing the condition.

Downloaded from www.Manualslib.com manuals search engine

DTC P0452 – Tank Pressure Sensor Low Voltage

Step	Action	Value(s)	Yes	No
1	Was the "On-Board Diagnostic (OBD) System Check" performed?	—	Go to *Step 2*	Go to *OBD System Check*
2	1. Ignition "ON," engine "OFF", review and record Tech 2 Failure Records Data. 2. Operate the vehicle within Failure Records conditions as noted. 3. Using a Tech 2, monitor "DTC" info for DTC P0452 until the DTC P0452 test runs. Note the result. Does the Tech 2 indicates DTC P0452 or P0452/P0107 failed this ignition?	—	P0452/P0107 turn on Go to *Step 3* P0452 turns on Go to *Step 6*	Refer to *Diagnostic Aids*
3	1. Ignition "OFF". 2. Disconnect connector at the PCM. 3. Ignition "ON". 4. At the PCM connector, measure voltage with a DVM at F54 and S37 terminals. Was the voltage in range of voltage?	4–6 V	Go to *Step 4*	Go to *Step 10*
4	1. Ignition "OFF". 2. Connect the PCM connector to the PCM. 3. Backprobe with a DVM at fuel tank pressure sensor between 5 V reference terminal and sensor ground terminal. Was the voltage within range?	4–6 V	For P0452 go to *Step 5* and for P0107, go to diagnosis section.	Go to *Step 5*
5	1. Locate open wiring of 5 volt reference circuit from the PCM to fuel tank pressure sensor. 2. Repair wiring harness. Is the action complete?	—	Verify repair	—
6	1. Ignition "ON" 2. At the PCM connector, backprove with a DVM at the sensor output for the voltage. Was voltage within the range?	Less than 0.2 V	Go to *Step 7*	Go to *Step 10*
7	At the sensor output terminal, backprobe with a DVM at the sensor output Was voltage within the range?	Less than 0.2 V	Go to *Step 9*	Go to *Step 8*
8	1. Locate open circuit or short circuit to ground line. 2. Repair the harness. Is the action complete?	—	Verify repair	—
9	1. Locate open circuit or short circuit to ground line. 2. Repair the harness. Is the action complete?	—	Verify repair	—

Downloaded from www.Manualslib.com manuals search engine

DTC P0452 – Tank Pressure Sensor Low Voltage (Cont'd)

Step	Action	Value(s)	Yes	No
10	Replace the PCM. **IMPORTANT:** The replacement PCM must be programmed. Refer to *On-Vehicle Service* in *Powertrain Control Module and Sensors* for procedures. And also refer to latest Service Bulletin. Check to see if the Latest software is released or not. And then Down Load the LATEST PROGRAMMED SOFTWARE to the replacement PCM. Is the action complete?	—	Verify repair	—

Downloaded from www.Manualslib.com manuals search engine

Diagnostic Trouble Code (DTC)
P0453 Fuel Tank Pressure Sensor (Vapor Pressure Sensor) High Voltage

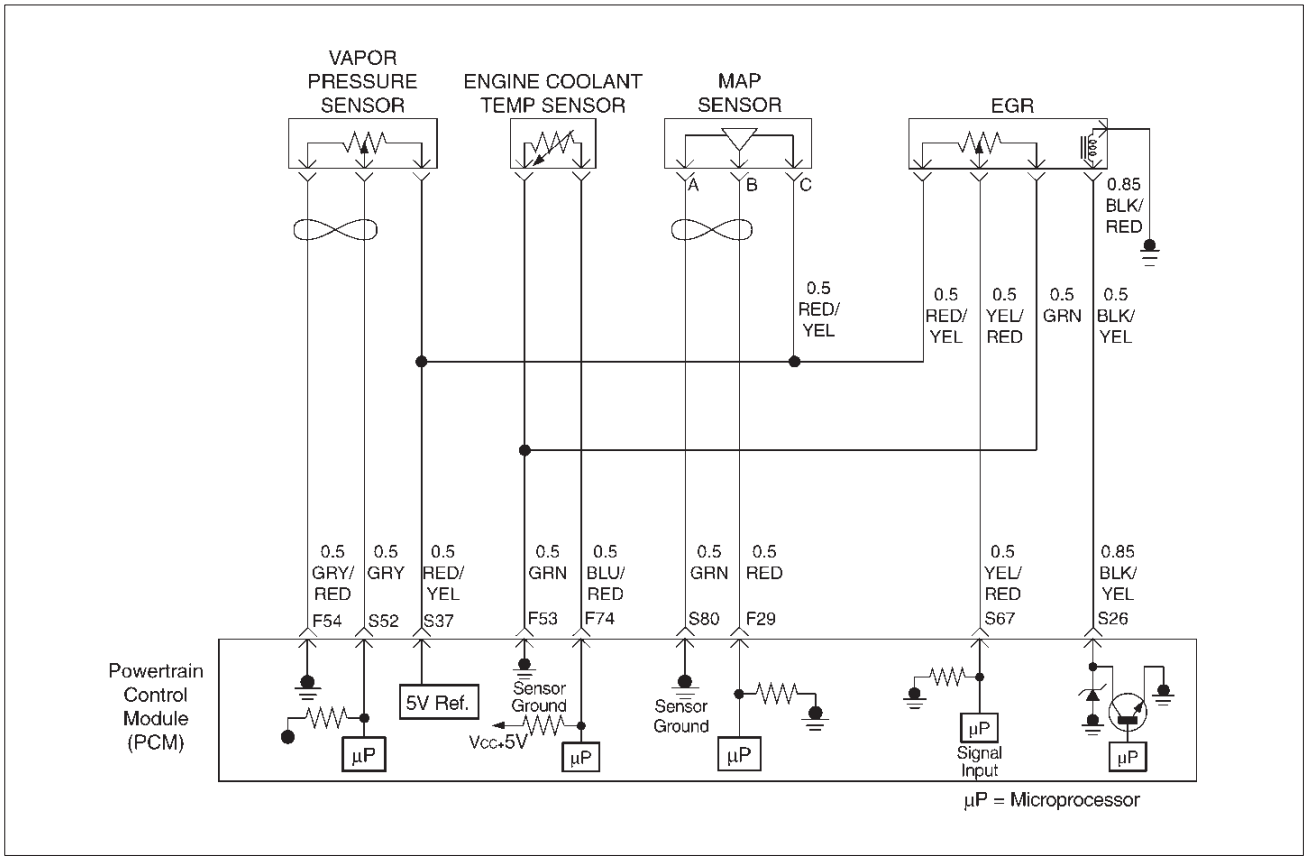

D06RY00178

Circuit Description

The powertrain control module (PCM) monitors fuel tank pressure sensor (Vapor pressure sensor) of the Enhanced Evapo system. When the tank pressure output indicates high voltage , PCM will set DTC P0453.

Conditions for Setting the DTC

- Tank sensor output is more than 4.9 volts for 12.5 sec.
- 100 test failures within a 200 tests.

Action Taken When the DTC Sets

- The PCM will illuminate the malfunction indicator lamp (MIL) as soon as failure detected.
- The PCM will store conditions which were present when the DTC was set as Freeze Frame and in Failure Records data.

Conditions for Clearing the MIL/DTC

- The PCM will turn the MIL “OFF” on the third consecutive trip cycle during which the diagnostic has been run and the fault condition is no longer present.
- A history DTC P0453 will clear after 40 consecutive warm-up cycles have occurred without a fault.
- Info function or by disconnecting the PCM battery feed.

Diagnostic Aids

Check for the following conditions:

- Open circuit of sensor ground line – Inspect wiring harness from PCM to the sensor. The PCM turns P0453, and P0108 at the same time.
- Open circuit or short circuit to 5 volt reference line – Inspect wiring harness from PCM to the sensor. The PCM turns P0453 and P0108 at the same time.
- Tank fuel pressure sensor malfunction may cause P0453.

Reviewing the Failure Records vehicle mileage since the diagnostic test last failed may help determine how often the condition that caused the DTC to be set occurs. This may assist in diagnosing the condition.

Downloaded from www.Manualslib.com manuals search engine

DTC P0453 – Fuel Tank Pressure Sensor High Voltage

Step	Action	Value(s)	Yes	No
1	Was the “On-Board Diagnostic (OBD) System Check” performed?	—	Go to *Step 2*	Go to *OBD System Check*
2	1. Ignition “ON,” engine “OFF”, review and record Tech 2 Failure Records Data. 2. Operate the vehicle within Failure Records conditions as noted. 3. Using a Tech 2, monitor “DTC” info for DTC P0453 until the DTC P0453 test runs. Note the result. Does the Tech 2 indicates DTC P0452 or P0452/P0107 failed this ignition?	—	P0453/P0108 turn on Go to *Step 3* P0452 turns on Go to *Step 6*	Refer to *Diagnostic Aids*
3	1. Ignition “OFF”. 2. Disconnect connector at the PCM. 3. Ignition “ON”. 4. At the PCM connector, measure voltage with a DVM at F54 and S37 terminals. Was the voltage in range of voltage?	4–6 V	Go to *Step 4*	Go to *Step 10*
4	1. Ignition “OFF”. 2. Connect the PCM connector to the PCM. 3. Disconnect sensor harness at fuel pressure sensor. Measure voltage with a DVM at the end of the tank pressure wiring between 5 V reference terminal and sensor ground terminal. Was the voltage within range?	4–6 V	For P0453 go to *Step 6* and for P0108, go to diagnosis section.	Go to *Step 5*
5	1. Locate open wiring of ground line from the PCM to fuel tank pressure sensor. 2. Repair wiring harness. Is the action complete?	—	Verify repair	—
6	1. Ignition “ON”. 2. At the PCM connector, backprove with a DVM at the sensor output for the voltage. Was voltage within the range?	More than 4.9 V	Go to *Step 7*	Go to *Step 10*
7	At the sensor output terminal, backprobe with a DVM at the sensor output. Was the voltage within range?	More than 4.9 V	Go to *Step 9*	Go to *Step 8*
8	1. Locate open circuit or short circuit to ground line. 2. Repair the harness. Is the action complete?	—	Verify repair	—
9	Replace the tank pressure sensor. Is the action complete?	—	Verify repair	—

Downloaded from www.Manualslib.com manuals search engine

DTC P0453 – Fuel Tank Pressure Sensor High Voltage (Cont'd)

Step	Action	Value(s)	Yes	No
10	Replace the PCM. **IMPORTANT:** The replacement PCM must be programmed. Refer to *On-Vehicle Service* in *Powertrain Control Module and Sensors* for procedures. And also refer to latest Service Bulletin. Check to see if the Latest software is released or not. And then Down Load the LATEST PROGRAMMED SOFTWARE to the replacement PCM. Is the action complete?	—	Verify repair	—

Downloaded from www.Manualslib.com manuals search engine

Diagnostic Trouble Code (DTC) P0456 EVAP Very Small Leak

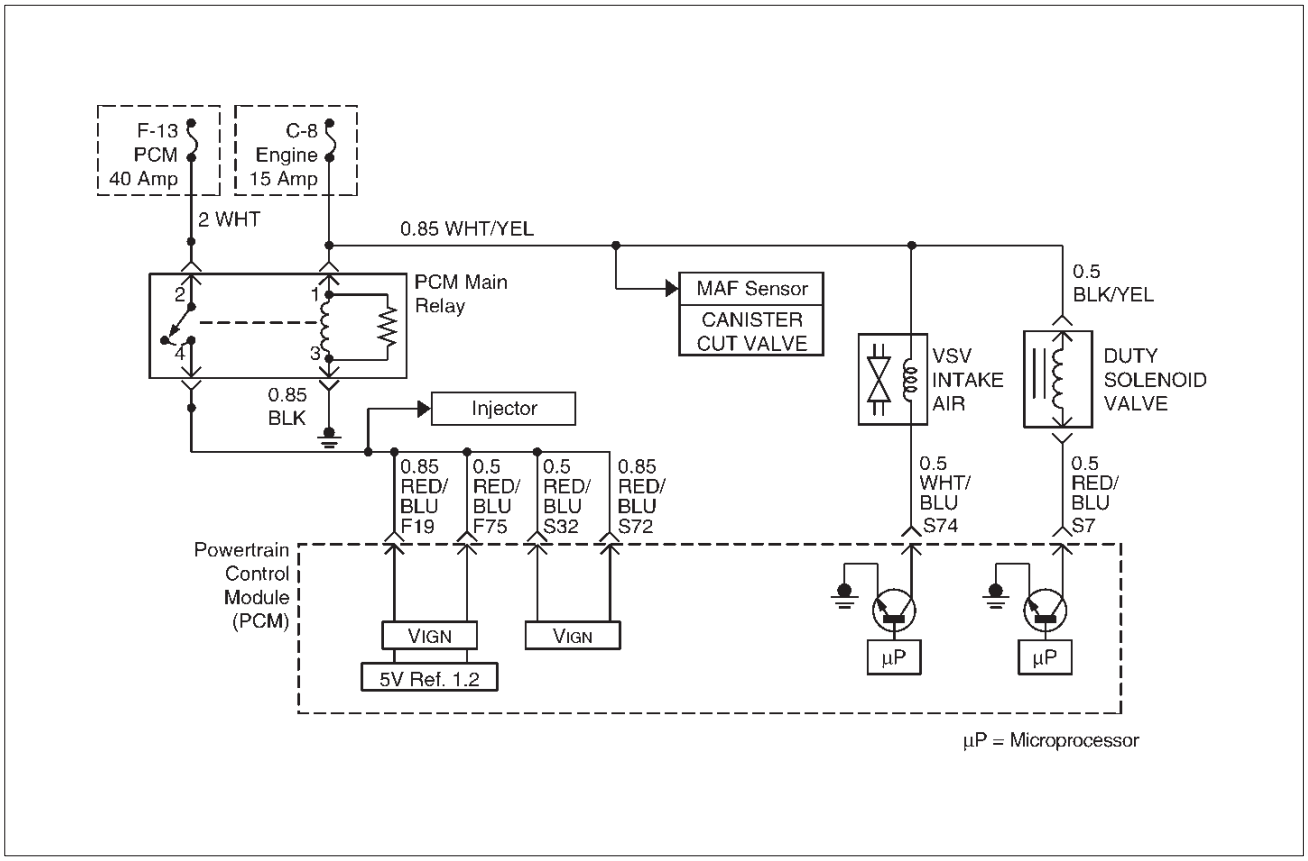

D06RY00128

Circuit Description

The evaporative system includes the following components:

- Fuel tank
- EVAP canister vent solenoid
- Fuel tank pressure sensor
- Vapor lines
- Fuel cap
- Evaporative emissions canister
- Purge lines
- EVAP canister purge solenoid

The evaporative leak detection diagnostic strategy is based on applying vacuum to the EVAP systemand monitoring vacuum decay. The powertrain control module(PCM)monitors vacuum level via the fuel tank presuure sensor input .At an appropriate time, the EVAP canister purge solenoid and the EVAP canister vent solenoid are turned “ON,” allowing engine vacuum to draw a very small on the entire evaporative emissions system. After the desired vacuum level has been achieved, the EVAP canister purge solenoid is turned “OFF”, sealing the system. A leak is detected by monitoring for a decrease in vacuum level over a given time period, all other variables remaining constant.

A very small leak in the system will cause DTC P0456 to be set.

Conditions for setting the DTC

- No MAP DTC’s set.
- No TPS DTC’s set.
- No IAT DTC’s set.
- No ECT DTC’s set.
- No tank pressure sensor DTC’s set.
- Baro is more than 70KPa.
- A vacuum decay condition, indicating a very small leak, is detected during the diagnostic test.

Action Taken When the DTC Sets

- The PCM will illuminate the malfunction indicator lamp (MIL) after the second consecutive trip in which the fault is detected.
- The PCM will store condition which were present when the DTC was set as Freeze Frame and in the Failure Records data.

  Warm up cycles have occurred without a fault.

Conditions for Clearing the MIL/DTC

- The PCM will turn the MIL “OFF” on the third consecutive trip cycle during which the diagnostic has been run and the fault condition is no longer present.
- A history DTC P0456 will clear after 40 cosecutive trip cycle during which the warm up cycles have occurred without a fault.
- DTC P0456 can be cleared using the Tech 2 “Clear Info” function or by disconnecting the PCM battery feed.

Downloaded from www.Manualslib.com manuals search engine

Diagnostic Aids

Check for the following conditions:

- Cracked or punctured EVAP canister.
- Damaged source vacuum line, EVAP purge line, EVAP vent hose or fuel tank vapor line. to wire connection.
- Poor connection at PCM–Inspect harness connectors for backed out terminals, improper mating, broken locks, improperly formed or damaged terminals, and poor terminal to wire connection.
- Damaged hanrness-Inspect the wiring harness to the EVAP canister purge solenoid and the fuel tank pressure sensor for an intermittent open or short circuit.

Reviewing the Failure Records vehicle mileage since the diagnostic test last failed may help determine how often the condition that caused the DTC to be set occurs.

This may assist in diagnosing the condition.

Diagnostic Trouble Code(DTC)P0456 EVAP Very Small Leak

Step	Action	Value(s)	Yes	No
1	Was the “On-Board(OBD)System Check”performed?	—	Go to *Step 2*	Go to *OBD System Check*
2	1. Ignition “OFF”. 2. Remove the fuel cap. 3. Ignition “ON”. 4. Observe “Fuel Tank Pressure” on the Tech 2. Does the Tech 2 indicate “Fuel Tank Pressure” at the specified value?	1.51V	Go to*Step 3*	Go to*Fuel Tank Pressure System*
3	1. Visually/physically check for the following conditions: • Vent hose disconnected or darmaged. • EVAP canister damaged. • Fuel cap damaged 2. If a problem is found,repair as necessary. Was a problem found?	—	Verify repair	Go to *Step 4*
4	1. Ignition “ON”, engine “OFF”. 2. Install the fuel cap. 3. Review and record Tech 2 Failure Records data. 4. Operate the vehicle within Failure Records conditions as noted. 5. Using theTech 2,monitor the “DTC” info for DTC P0456. Does the Tech 2 indicate DTC P0456?	—	Go to *Step 5*	Refer to *Diagnostic Aids*
5	1. Ignition “ON”, engine idling. 2. Observe “Fuel Tank Pressure” on the Tech 2. Does the Tech 2 indicate “Fuel Tank Pressure” at the specified value?	1.02–1.86 V	Refer to *Diagnostic Aids*	Go to *Step 6*
6	1. Ignition “ON”, engine idling. 2. Using theTech 2, command the EVAP canister vent solenoid “ON” (closed) 3. Observe “EVAP canister vent solenoid operation”. second value? 4. If a problem is found, repair as necessary. Was a problem found?	—	Verify repair	Go to *Step 7*

Downloaded from www.Manualslib.com manuals search engine

Diagnostic Trouble Code(DTC)P0456 EVAP Very Small Leak (Cont'd)

Step	Action	Value(s)	Yes	No
7	1. Visually/physically check for the following conditions: ● Disconnected or leaking fuel tank vapor line. ● Disconnected or damage EVAP purge line. 2. If a problem is found,repair as necessary. Was a problem found?	—	Verify repair	Refer to *Diagnostic Aids*

Downloaded from www.Manualslib.com manuals search engine

Diagnostic Trouble Code (DTC) P0462 Fuel Level Sensor Circuit–Low Voltage

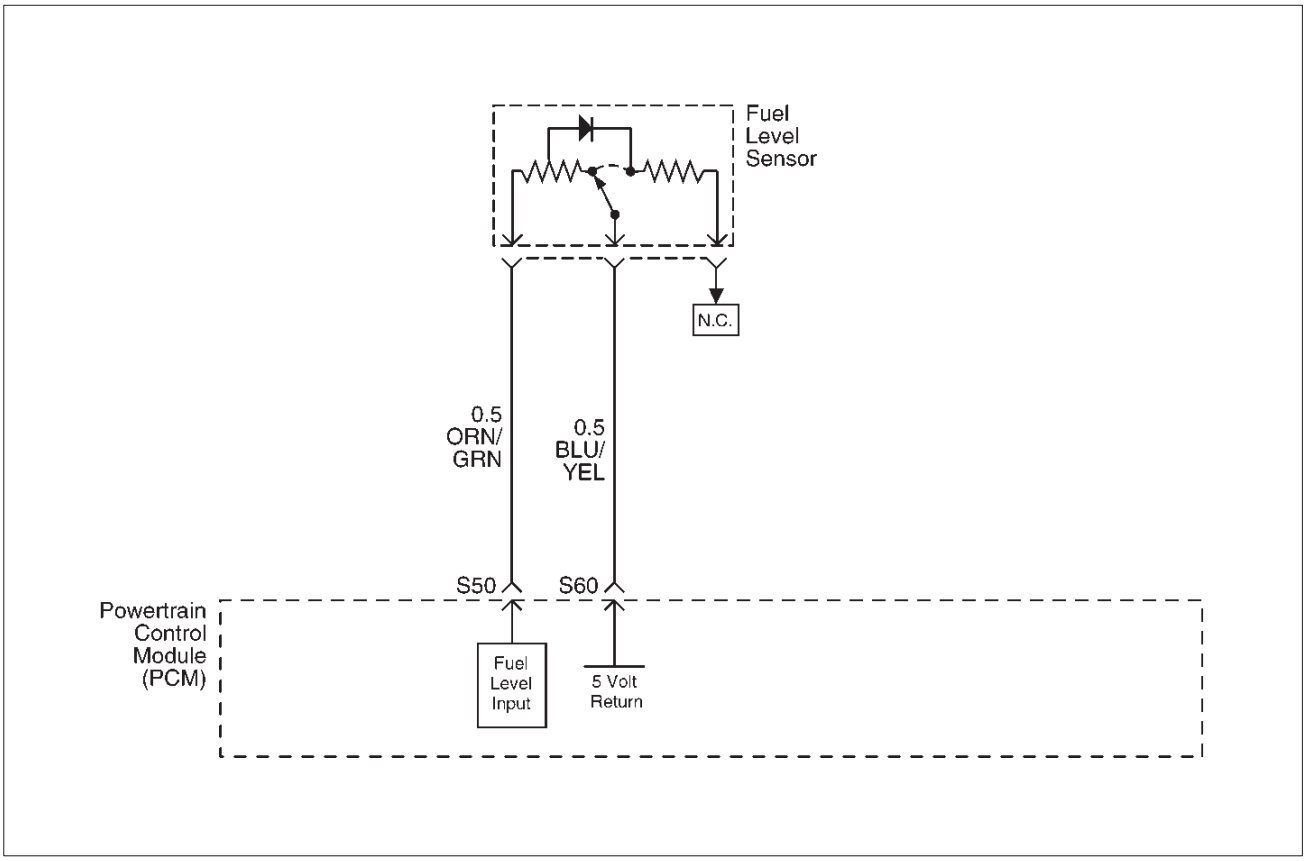

060RY00163

Circuit Description

The fuel level sensor is an important input to powertrain control module (PCM) for the enhanced evaporative system diagnostic. Fuel level information is needed for the PCM to know the volume of fuel in the tank. The fuel level affects the rate of change in air pressure in the evaporative system. Several of the enhanced evaporative system diagnostic sub-tests are dependent upon correct fuel level information. The diagnostic will not run when the tank is greater than 85%, or less than 15% full. Fuel level DTCs should be diagnosed before other evaporative system DTCs because they can cause other DTCs to be set.

The sending unit is a float in the fuel tank which moves a wiper arm across a variable resistor. Low fuel level causes high resistance in the sending unit, and this is recognized by the PCM because the circuit operates at a corresponding low voltage. When the circuit is continuously open or has a high resistance connection, DTC P0462 is set.

Conditions for Setting the DTC

- Fuel tank level “slosh test” is completed.
- Fuel tank level “main test” is completed.
- Fuel tank level data is valid.
- Fuel tank level signal is less than a specified value.
- There are 100 test failures within a 200-test sample.

Action Taken When the DTC Sets

- The PCM will not turn the malfunction indicator lamp (MIL) “ON.”
- The PCM will store conditions which were present when the DTC was set as Failure Records only. This information will not be stored as Freeze Frame data.

Conditions for Clearing the DTC

- The PCM will turn the MIL “OFF” after three consecutive trips without a fault condition present. A history DTC will be cleared if no fault conditions have been detected for 40 warm-up cycles (engine coolant temperature has risen 4˚C (40˚F) from the start-up ECT, and ECT exceeds 71˚C (160˚F) during that same ignition cycle).
- DTC P0462 can be cleared by using the scan tool “Clear Info” function or by disconnecting the PCM battery feed.

Diagnostic Aids

- Damaged harness–Inspect the wiring harness for damage. If the harness appears to be OK, observe the fuel level display on the scan tool while moving connectors and wiring harnesses related to the sensor. A change in the display will indicate the location of the fault.

Downloaded from www.Manualslib.com manuals search engine

Test Description

Number(s) below refer to the step number(s) on the Diagnostic Chart.

8. The following chart can be used to check the sending unit:

Downloaded from www.Manualslib.com manuals search engine

DTC P0462– Fuel Level Sensor Circuit –Low Voltage

Step	Action	Value(s)	Yes	No
1	Was the “On-Board Diagnostic (OBD) System Check” performed?	—	Go to *Step 2*	Go to *OBD System Check*
2	1. Disconnected the fuel level sensor harness from its connector at the fuel tank. 2. Ignition “ON,” engine “OFF.” 3. Using a DVM, measure the voltage between the sensor harness positive and ground wires. Is the voltage approximately equal to the specified value?	5 V	Go to *Step 6*	Go to *Step 3*
3	1. Ignition “ON,” engine “OFF.” 2. With a DVM, backprobe the PCM connector at the terminal which supplies 5 volts to the fuel level sensor. Is the voltage approximately equal to the specified value?	5 V	Go to *Step 4*	Go to *Step 9*
4	1. Ignition “ON,” engine “OFF.” 2. Fuel level sensor disconnected from wiring harness. 3. With a DVM, probe the 5-volt supply wire at the sensor harness. Is the voltage approximately equal to the value measured in Step 4?	—	Go to *Step 5*	Go to *Step 9*
5	Check for open or high resistance connection in the ground wire between the PCM and the fuel level sensor. Is the action complete?	—	Verify repair	—
6	Remove the fuel level sensor and check the following: ● Does the arm move freely? ● Are the wires open or intermittently open when wiggled? ● Do the resistance values match the specification chart? Was a problem found?	—	Go to *Step 7*	Go to *Step 9*
7	Replace the fuel level sensor. Is the action complete?	—	Verify repair	—
8	Replace the PCM. **IMPORTANT:** The replacement PCM must be programmed. Refer to *On-Vehicle Service* in *Powertrain Control Module and Sensors* for procedures. And also refer to latest Service Bulletin. Check to see if the Latest software is released or not. And then Down Load the LATEST PROGRAMMED SOFTWARE to the replacement PCM. Is the action complete?	—	Verify repair	—
9	Short to ground between the PCM connector and the fuel level sensor. Is the action complete?	—	Verify repair	—

Downloaded from www.Manualslib.com manuals search engine

Diagnostic Trouble Code (DTC) P0463 Fuel Level Sensor Circuit–High Voktage

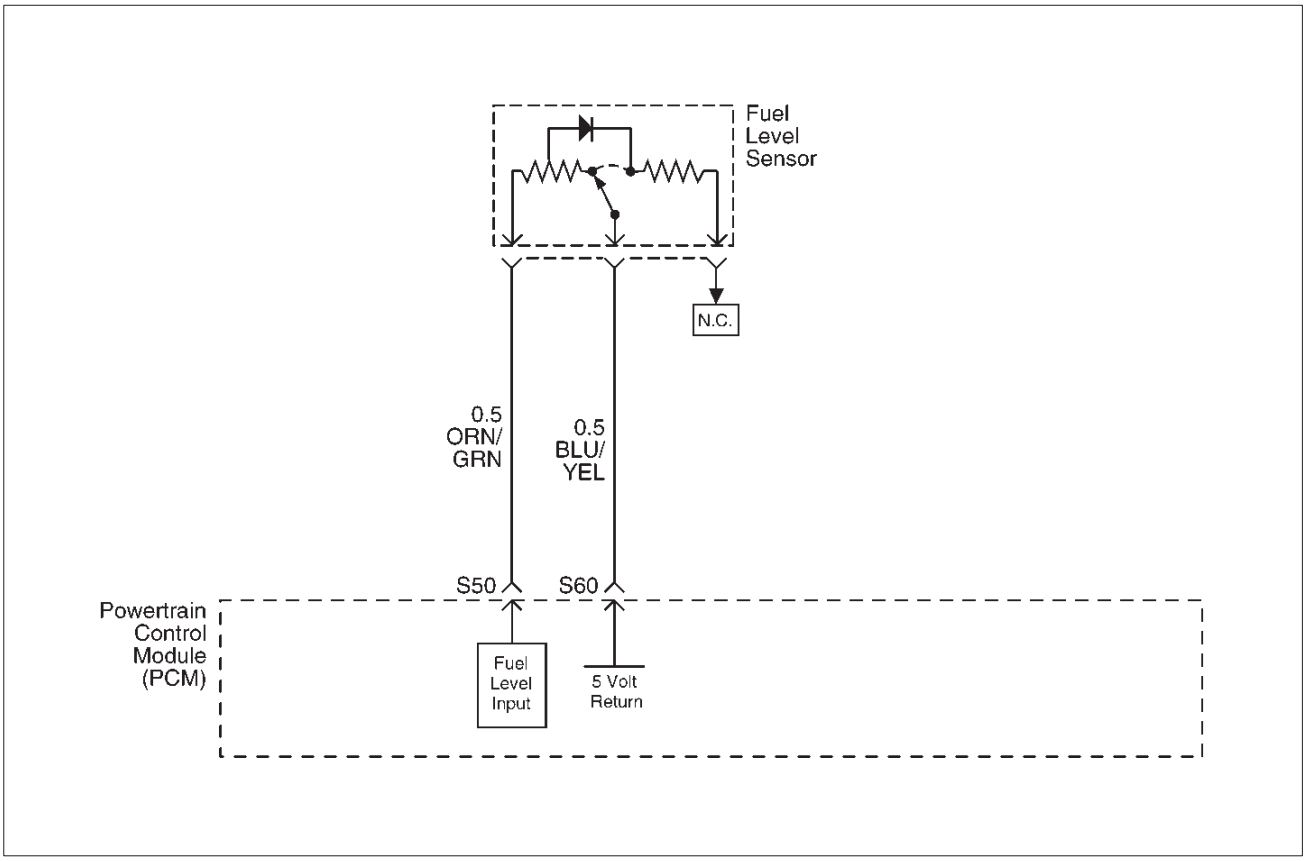

060RY00163

Circuit Description

The fuel level sensor is an important input to powertrain control module (PCM) for the enhanced evaporative system diagnostic. Fuel level information is needed for the PCM to know the volume of fuel in the tank. The fuel level affects the rate of change in air pressure in the evaporative system. Several of the enhanced evaporative system diagnostic sub-tests are dependent upon correct fuel level information. The diagnostic will not run when the tank is greater than 85% or less than 15%, full. Fuel level DTCs should be diagnosed before other evaporative system DTCs because they can cause other DTCs to be set.

The sending unit is a float in the fuel tank which moves a wiper arm across a variable resistor. High fuel level causes low resistance in the sending unit. This is recognized by the PCM because the circuit operates at a corresponding high voltage. When the circuit is continuously shorted to a voltage source greater than a specified value, or when the 5 volt signal is shorted to ground, DTC P0463 is set.

Conditions for Setting the DTC

- Fuel tank level “slosh test” is completed.
- Fuel tank level “main test” is completed.
- Fuel tank level data is valid.
- Fuel tank level signal is greater than a specified value.
- There are 100 test failures within a 200-test sample.

Action Taken When the DTC Sets

- The PCM will not turn the malfunction indicator lamp (MIL) “ON.”
- The PCM will store conditions which were present when the DTC set as Failure Records only. This information will not be stored as Freeze Frame data.

Conditions for Clearing the DTC

- The PCM will turn the MIL “OFF” after three consecutive trips without a fault condition present. A history DTC will be cleared if no fault conditions have been detected for 40 warm-up cycles (engine coolant temperature has risen 4˚C (40˚F) from the start-up ECT, and ECT exceeds 71˚C (160˚F) during that same ignition cycle) or the scan tool clearing function has been used.
- DTC P0463 can be cleared by using the scan tool “Clear Info” function or by disconnecting the PCM battery feed.

Diagnostic Aids

- Damaged harness–Inspect the wiring harness for damage. If the harness appears to be OK, observe the fuel level display on the scan tool while moving connectors and wiring harnesses related to the sensor. A change in the display will indicate the location of the fault.

Downloaded from www.Manualslib.com manuals search engine

Test Description

Number(s) below refer to the step number(s) on the Diagnostic Chart.

2. The ETC and MAP sensors share a ground at PCM terminal D9.
9. Equates the resistance values at various float positions to the following fuel gauge readings:

DTC P0463– Fuel Level Sensor Circuit –High Voltage

Step	Action	Value(s)	Yes	No
1	Was the "On-Board Diagnostic (OBD) System Check" performed?	—	Go to *Step 2*	Go to *OBD System Check*
2	1. Disconnected the fuel level sensor harness from its connector at the fuel tank. 2. Ignition "ON," engine "OFF." 3. Using a DVM, measure the voltage between the sensor harness positive and ground wires. Is the voltage approximately equal to the specified value?	5 V	Go to *Step 8*	Go to *Step 3*
3	With the negative DVM lead connected to ground, use the positive DVM lead to probe the sensor ground wire with the harness still disconnected. Does the DVM indicate a short to a voltage source?	—	Go to *Step 4*	Go to *Step 5*
4	Repair short to voltage between the sensor and the PCM. Is the repair complete?	—	Verify repair	—
5	With the negative DVM lead connected to ground, use the positive DVM lead to probe the sensor positive wire with the harness still disconnected. Does the DVM indicate a voltage greater than the specified value?	5 V	Go to *Step 4*	Go to *Step 6*
6	Open circuit between the PCM connector and the fuel level sensor?	—	Verify repair	Go to *Step 7*
7	Replace the PCM. **IMPORTANT:** The replacement PCM must be programmed. Refer to *On-Vehicle Service* in *Powertrain Control Module and Sensors* for procedures. And also refer to latest Service Bulletin. Check to see if the Latest software is released or not. And then Down Load the LATEST PROGRAMMED SOFTWARE to the replacement PCM. Is the action complete?	—	Verify repair	—
8	Remove the fuel level sensor and check the following: • Does the arm move freely? • Are the wire leads shorted together? • Do the resistance values match the specification chart? Was a problem found?	—	Go to *Step 9*	Go to *Step 7*
9	Replace the fuel level sensor. Is the repair complete?	—	Verify repair	—

Downloaded from www.Manualslib.com manuals search engine

Diagnostic Trouble Code (DTC) P0502 VSS Circuit Low Input

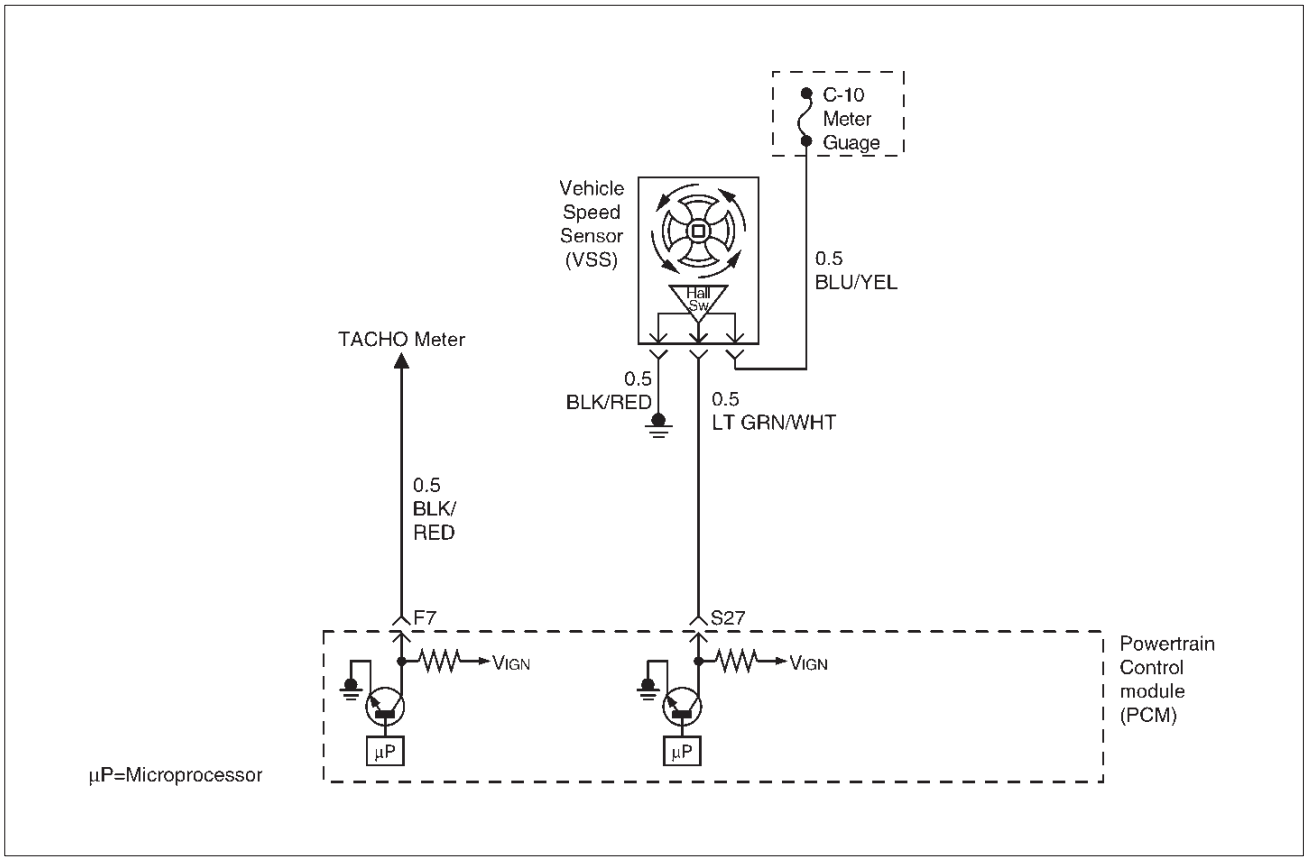

D06RY00070

Circuit Description

The vehicle speed sensor has a magnet rotated by the transmission output shaft. Attached to the sensor is a hall effect circuit the interacts with the magnetic field treated by the rotating magnet. A 12-volt operating supply for the speed sensor hall circuit is supplied from the meter fuse. The VSS pulses to ground the 9-volt signal sent from the powertrain control module (PCM) on the reference circuit. The PCM interprets vehicle speed by the number of pulses to ground per second on the reference circuit.

Conditions for Setting the DTC

- Engine is running.
- Engine speed is between 1800 RPM and 2500 RPM.
- Throttle angle is between 10% and 40%.
- Engine load is greater than 50 kPa.
- PCM detects no VSS signal for 12.5 seconds over a period of 15 seconds.

Action Taken When the DTC Sets

- The PCM will illuminate the malfunction indicator lamp (MIL) the first time the fault is detected.
- The PCM will store conditions which were present when the DTC was set as Freeze Frame and in the Failure Records data.

Conditions for Clearing the MIL/DTC

- The PCM will turn the MIL “OFF” on the third consecutive trip cycle during which the diagnostic has been run and the fault condition is no longer present.
- A history DTC P0502 will clear after 40 consecutive warm-up cycles have occurred without a fault.
- DTC P0502 can be cleared by using the Tech 2 “Clear Info” function or by disconnecting the PCM battery feed.

Test Description

Number(s) below refer to the step number(s) on the Diagnostic Chart.

10. To avoid backprobing the VSS and possibly damaging a seal or terminal, the VSS output can be tested at the point where the transmission harness connects to the engine harness. Power and ground are applied by jumpers to the VSS through the connectors which are located to the rear of the air cleaner assembly. The VSS signal is monitored with a DVM as the rear driveshaft turns. The wheels can be turned to rotate the driveshaft, or in 2-wheels-drive vehicles the driveshaft can be turned directly.

Downloaded from www.Manualslib.com manuals search engine

DTC P0502 – VSS Circuit Low Input

Step	Action	Value(s)	Yes	No
1	Was the “On-Board Diagnostic (OBD) System Check” performed?	—	Go to *Step 2*	Go to *OBD System Check*
2	Does the speedometer work?	—	Go to *Step 10*	Go to *Step 3*
3	1. Disconnect the VSS connector. 2. Ignition “ON.” 3. Using a test light to battery +, probe the connector ground wire. Did the light illuminate?	—	Go to *Step 5*	Go to *Step 4*
4	Repair the sensor ground. Is the action complete?	—	Verify repair	—
5	1. Ignition “ON,” sensor disconnected. 2. Using a DVM, measure at the VSS connector between ground and voltage supply. Was the measurement near the specified value?	Battery voltage	Go to *Step 7*	Go to *Step 6*
6	Repair the open or short to ground which may have blown the meter fuse. Is the action complete?	—	Verify repair	—
7	1. Ignition “ON,” VSS disconnected. 2. Using a DVM, measure at the VSS connector between ground and the wire from the speedometer. Was the measurement near the specified value?	7.5-8 V	Go to *Step 9*	Go to *Step 8*
8	Check for an open or short circuit between the speedometer and the VSS. Was an open or short circuit located?	—	Verify repair	Go to *Step 9*
9	Replace the speedometer. Is the action complete?	—	Verify repair	—

Downloaded from www.Manualslib.com manuals search engine

DTC P0502 – VSS Circuit Low Input (Cont'd)

Step	Action	Value(s)	Yes	No
10	1. Ignition "OFF." 2. Disconnect the MAF sensor. The connector attaches the VSS wires from the transmission harness to the left-side engine harness. 3. Disconnect the black 16-way connector. 4. Select a terminal adapter from kit J 35616 that can be used with a jumper to supply B+ to the blue wire with a yellow tracer (transmission side of the connector). 5. Use another terminal adapter to attach a voltmeter to the light-green wire with a white tracer (next to the wire in the previous step.) 6. Disconnect the blue connector next to the black 16-way connector, and locate the black/red tracer wire at one corner of the blue connector. The black/red wire is the VSS ground. Use a terminal adapter to attach a jumper to ground to the black/red VSS ground wire at the transmission side of the blue connector. 7. Raise the rear wheels off the ground with transmission in neutral. Does the DVM toggle back and forth between 0.6 V and 10 V as the wheels (and driveshaft) are rotated?	—	Go to *Step 11*	Go to *Step 10*
11	Replace the VSS. Is the action complete?	—	Verify repair	—
12	Check for an open or short between the PCM and the speedometer. Was a problem found?	—	Verify repair	Go to *Step 13*
13	Replace the PCM. **IMPORTANT:** The replacement PCM must be programmed. Refer to *On-Vehicle Service* in *Powertrain Control Module and Sensors* for procedures. ANd also refer to latest Service Bulletin. Check to see if the Latest software is released or not. And then Down Load the LATEST PROGRAMMED SOFTWARE to the replacement PCM. Is the action complete?	—	Verify repair	—

Downloaded from www.Manualslib.com manuals search engine

Diagnostic Trouble Code (DTC) P0506 Idle Air Control System Low RPM

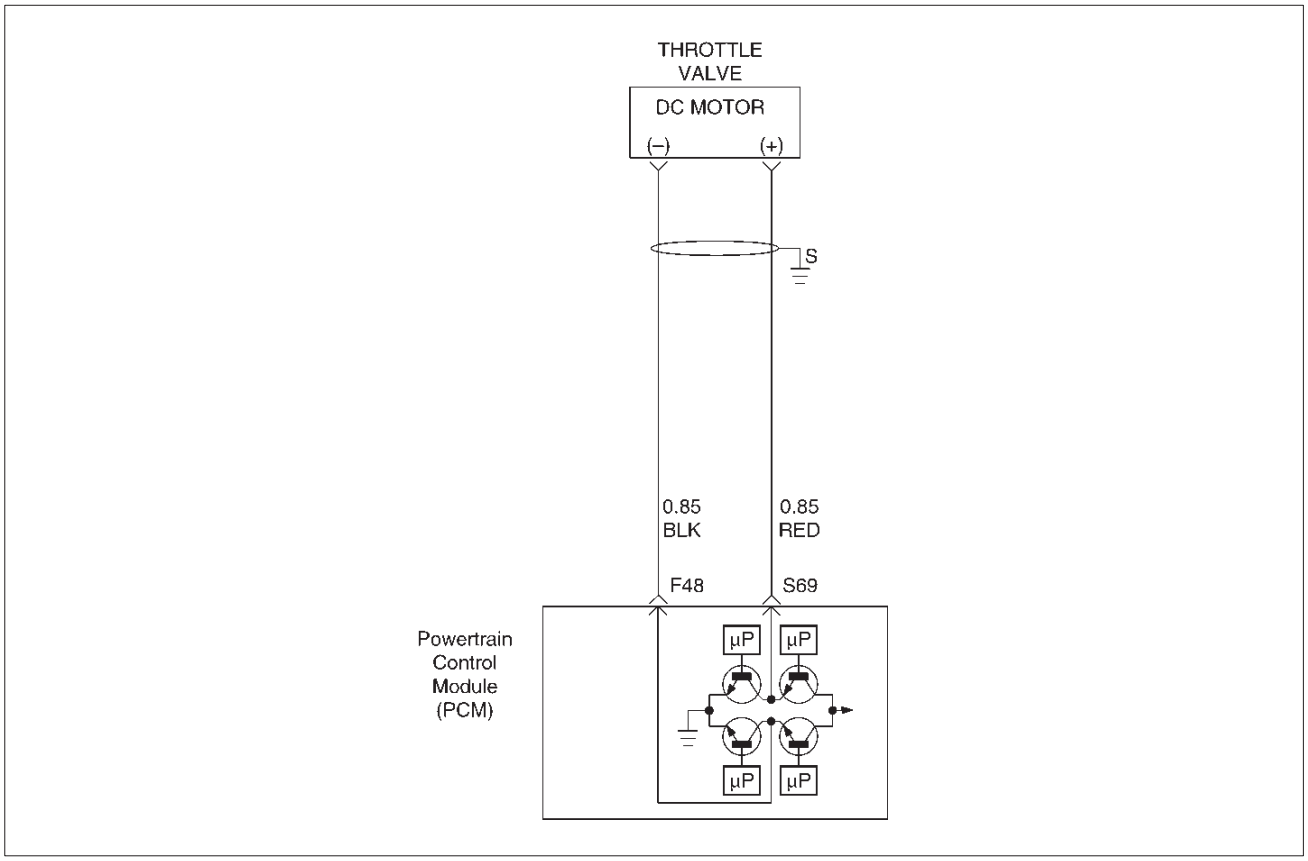

D06RY00158

Circuit Description

The powertrain control module (PCM) controls engine speed by adjusting the position of the throttle control valve (DC motor). The throttle motor is a DC motor driven by one coil. The PCM applies current to the DC motor coil in position (%) to adjustment the throttle valve into a passage in the throttle body to air flow. This method allows highly accurate control of engine speed and quick response to changes in engine load.

If the PCM detects a condition where too low of an idle speed is present and the PCM is unable to adjust idle speed by increasing the throttle position, DTC P0506 will set, indicating a problem with the idle control system.

Conditions for Setting the DTC

- No TPS, VSS, ECT, EGR, MAF, low voltage, fuel system, canister purge, injector control, or ignition control DTCs are set.
- MAP is less than 60 kPa.
- Canister purge duty cycle is above 10%.
- Engine running time is more than 125 seconds.
- Vehicle speed is less than 1 mph.
- Engine coolant temperature (ECT) is above 50˚C.
- Ignition voltage is between 9.5 volts and 16.7 volts.
- The throttle is closed.
- EVAP purge duty cycle more than 10%.
- All conditions are met for 10 seconds.
- Engine speed is more than 100-200 RPM lower than desired idle based upon coolant temperature.

Action Taken When the DTC Sets

- The PCM will illuminate the malfunction indicator lamp (MIL) after the second consecutive trip in which the fault is detected.
- The PCM will store conditions which were present when the DTC was set as Freeze Frame and in the Failure Records data.

Conditions for Clearing the MIL/DTC

- DTC P0506 can be cleared by using the Tech 2 “Clear Info” function or by disconnecting the PCM battery feed.

Diagnostic Aids

Check for the following conditions:

- Poor connection at PCM or throttle DC motor – Inspect harness connectors for backed-out terminals, improper mating, broken locks, improperly formed or damaged terminals, and poor terminal-to-wire connection.
- Damaged harness – Inspect the wiring harness for damage.
- Restricted air intake system – Check for a possible collapsed air intake duct, restricted air filter element, or foreign objects blocking the air intake system.
- Throttle body – Check for objects blocking the ETC passage or throttle bore, excessive deposits in the

Downloaded from www.Manualslib.com manuals search engine

ETC passage and on the ETC position, and excessive deposits in the throttle bore and on the throttle plate.

- Large vacuum leak – Check for a condition that causes a large vacuum leak, such as an incorrectly installed or faulty PCV valve or brake booster hose disconnected.

Reviewing the Failure Records vehicle mileage since the diagnostic test last failed may help determine how often the condition that caused the DTC to be set occurs. This may assist in diagnosing the condition.

DTC P0506 – Idle Air Control System Low RPM

Step	Action	Value(s)	Yes	No
1	Was the "On-Board (OBD) System Check" performed?	—	Go to *Step 2*	Go to *OBD System Check*
2	Visually/physically inspect for the following conditions: ● Throttle body tampering. ● Restricted intake throttle system. Check for a possible collapsed air intake duct, restricted air filter element, or foreign objects blocking the air intake system. ● Throttle body: Check for objects blocking the throttle passage or throttle bore, excessive deposits in the throttle passage and on the throttle valve, and excessive deposits in the throttle bore and on the throttle plate. ● Throttle body with lever: Check for objects send round the throttle spring lever that lever is smooth movement, and spring lever has not excessive play Do any of the above require a repair?	—	Refer to *appropriate section foron–vehicle service*	Go to *Step 4*
3	Visually/physically inspect for the following conditions: ● Acceleration pedal tampering. ● Acceleration pedaL : Check for objects blocking the spring or pedal arm. ● Acceleration pedal : Check for objects move the acceleration pedal that pedal is smooth movement, and acceleration pedal arm has not excessive play. Do any of the above require a repair?	—	Refer to *appropriate section foron–vehicle service*	Go to *Step 4*
4	1. Check for a poor connection at the throttle body harness connector. 2. Check for a poor connection at the acceleration position sensor harness connector. 3. If a problem is found, replace faulty terminals as necessary. Was a problem found?	—	Verify repair	Go to *Step 7*
5	Check the following circuits for an open, short tovoltage, short to ground, or poor connection at thePCM: ● Throttle position sensor 1 circuit. ● Throttle position sensor 2 circuit. ● Throttle DC motor circuit. ● Throttle position sensor resistance. ● Throttle DC motor resistance. ● If a problem is found, repair as necessary. Was a problem found?	Vcc-GND 1–7kμ SIG-DND change resistance0.3 – 100μ	Verify repair	Go to *Step 6*

Downloaded from www.Manualslib.com manuals search engine

DTC P0506 – Idle Air Control System Low RPM (Cont'd)

Step	Action	Value(s)	Yes	No
6	Replace the throttle valve. Is the action complete?	—	Go to *Step 3*	—
7	1. Check the following circuits for an open, short tovoltage, short to ground, or poor connection at the PCM: Acceleration position sensor 1 circuit. Acceleration position sensor 2 circuit. C position sensor 2 circuit. V position sensor resistance. 2. If a problem is found, repair as necessary. Was a problem found?	Vcc-GND 4–6kμ SIG-DND change resistance	Verify repair	Go to *Step 8*
8	Replace the acceleration position sensor. Is the action complete?	—	Go to *Step 9*	—
9	Following below the DTCs stored: P1125, P1290, P1295, P1299	—	Go to *applicableDTC table*	Go to *Step 10*
10	Following below the DTCs stored:P1514, P1515, P1516, P1523, P1271, P1272, P1273	—	Go to *applicable DTC table*	Go to *Step 11*
11	Replace the PCM. **IMPORTANT:** The replacement PCM must be programmed. Refer to *On-Vehicle Service* in *Powertrain Control Module and Sensors* for procedures. And also refer to latest Service Bulletin. Check to see if the Latest software is released or not. And then Down Load the LATEST PROGRAMMED SOFTWARE to the replacement PCM. Is the action complete?	—	Verify repair	—

Downloaded from www.Manualslib.com manuals search engine

Diagnostic Trouble Code (DTC) P0507 Idle Air Control System High RPM

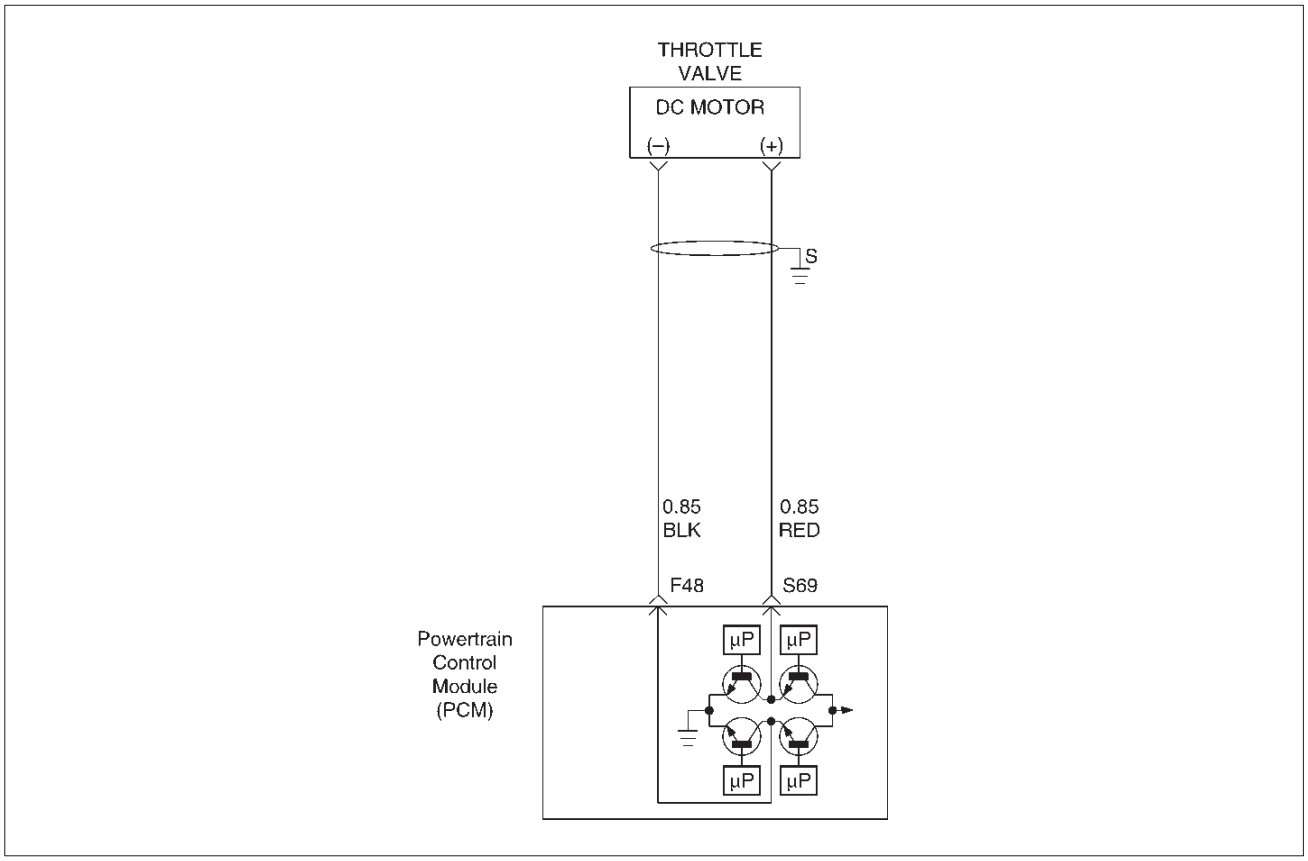

D06RY00158

Circuit Description

The powertrain control module (PCM) controls engine speed by adjusting the position of the throttle control valve (DC motor). The throttle motor is a DC motor driven by one coil. The PCM applies current to the DC motor coil in position (%) to adjustment the throttle valve into a passage in the throttle body to air flow. This method allows highly accurate control of engine speed and quick response to changes in engine load.

If the PCM detects a condition where too high of an idle speed is present and the PCM is unable to adjust idle speed by increasing the throttle position, DTC P0507 will set, indicating a problem with the idle control system.

Conditions for Setting the DTC

- No TPS, VSS, ECT, EGR, MAF, low voltage, fuel system, canister purge, injector control or ignition control DTCs are set.
- Barometric pressure is above 75 kPa.
- Canister purge duty cycle is above 10%.
- Engine running time is more than 125 seconds.
- Vehicle speed is less than 1 mph.
- Engine coolant temperature (ECT) is above 50˚C.
- Ignition voltage is between 9.5 volts and 16.7 volts.
- The throttle is closed.
- EVAP purge duty cycle is more than 10%.
- All conditions are met for 10 seconds.
- Engine speed is more than 100-200 RPM higher than desired idle based upon coolant temperature.

Action Taken When the DTC Sets

- The PCM will illuminate the malfunction indicator lamp (MIL) after the second consecutive trip in which the fault is detected.
- The PCM will store conditions which were present when the DTC was set as Freeze Frame and in the Failure Records data.

Conditions for Clearing the MIL/DTC

- The PCM will turn the MIL “OFF” on the third consecutive trip cycle during which the diagnostic has been run and the fault condition is no longer present.
- A history DTC P0507 will clear after 40 consecutive warm-up cycles have occurred without a fault.
- DTC P0507 can be cleared by using the Tech 2 “Clear Info” function or by disconnecting the PCM battery feed.

Diagnostic Aids

Check for the following conditions:

- Poor connection at PCM or throttle DC motor – Inspect harness connectors for backed-out terminals, improper mating, broken locks, improperly formed or damaged terminals, and poor terminal-to-wire connection.
- Damaged harness – Inspect the wiring harness for damage.
- Vacuum leak – Check for a condition that causes a vacuum leak, such as disconnected or damaged hoses, leaks at EGR valve and EGR pipe to intake

Downloaded from www.Manualslib.com manuals search engine

manifold, leak at the throttle body, a faulty or incorrectly installed PCV valve, leaks at the intake manifold, etc.

- Throttle body – Check for sticking throttle plate. Also inspect the air passage for deposits or objects which will not allow the ETC position to fully extend or properly seat.

If DTC P0507 cannot be duplicated, reviewing the Failure Records vehicle mileage since the diagnostic test last failed may help determine how often the condition that caused the DTC to be set occurs. This may assist in diagnosing the condition.

DTC P0507 – Idle Air Control System High RPM

Step	Action	Value(s)	Yes	No
1	Was the "On-Board (OBD) System Check" performed?	—	Go to *Step 2*	Go to *OBD System Check*
2	Visually/physically inspect for the following conditions: ● Throttle body tampering. ● Restricted intake throttle system. Check for a possible collapsed air intake duct, restricted air filter element, or foreign objects blocking the air intake system. ● Throttle body: Check for objects blocking the throttle passage or throttle bore, excessive deposits in the throttle passage and on the throttle valve, and excessive deposits in the throttle bore and on the throttle plate. ● Throttle body with lever: Check for objects send round the throttle spring lever that lever is smooth movement, and spring lever has not excessive play Do any of the above require a repair?	—	Refer to *appropriate section for on-vehicle service*	Go to *Step 4*
3	Visually/physically inspect for the following conditions: ● Acceleration pedal tampering. ● Acceleration pedaL : Check for objects blocking the spring or pedal arm. ● Acceleration pedal : Check for objects move the acceleration pedal that pedal is smooth movement, and acceleration pedal arm has not excessive play. Do any of the above require a repair?	—	Refer to *appropriate section for on-vehicle service*	Go to *Step 4*
4	1. Check for a poor connection at the throttle body harness connector. 2. Check for a poor connection at the acceleration position sensor harness connector. 3. If a problem is found, replace faulty terminals as necessary. Was a problem found?	—	Verify repair	Go to *Step 7*
5	Check the following circuits for an open, short to voltage, short to ground, or poor connection at the PCM: ● Throttle position sensor 1 circuit. ● Throttle position sensor 2 circuit. ● Throttle DC motor circuit. ● Throttle position sensor resistance. ● Throttle DC motor resistance. ● If a problem is found, repair as necessary. Was a problem found?	Vcc-GND 1–7kμ SIG-DND change resistance 0.3 – 100μ	Verify repair	Go to *Step 6*

Downloaded from www.Manualslib.com manuals search engine

DTC P0507 – Idle Air Control System High RPM (Cont'd)

Step	Action	Value(s)	Yes	No
6	Replace the throttle valve. Is the action complete?	—	Go to *Step 3*	—
7	1. Check the following circuits for an open, short tovoltage, short to ground, or poor connection at the PCM: ● Acceleration position sensor 1 circuit. ● Acceleration position sensor 2 circuit. ● C position sensor 3 circuit. ● V position sensor resistance. 2. If a problem is found, repair as necessary. Was a problem found?	Vcc-GND 4–6kμ SIG-DND change resistance	Verify repair	Go to *Step 8*
8	Replace the acceleration position sensor. Is the action complete?	—	Go to *Step 9*	—
9	Following below the DTCs stored: P1125, P1290, P1295, P1299	—	Go to *applicable DTC table*	Go to *Step 10*
10	Following below the DTCs stored:P1514, P1515, P1516, P1523, P1271, P1272, P1273	—	Go to *applicable DTC table*	Go to *Step 11*
11	Replace the PCM. **IMPORTANT:** The replacement PCM must be programmed. Refer to *On-Vehicle Service* in *Powertrain Control Module and Sensors* for procedures. ANd also refer to latest Service Bulletin. Check to see if the Latest software is released or not. And then Down Load the LATEST PROGRAMMED SOFTWARE to the replacement PCM. Is the action complete?	—	Verify repair	—

Downloaded from www.Manualslib.com manuals search engine

Diagnostic Trouble Code (DTC) P0562 System Voltage Low

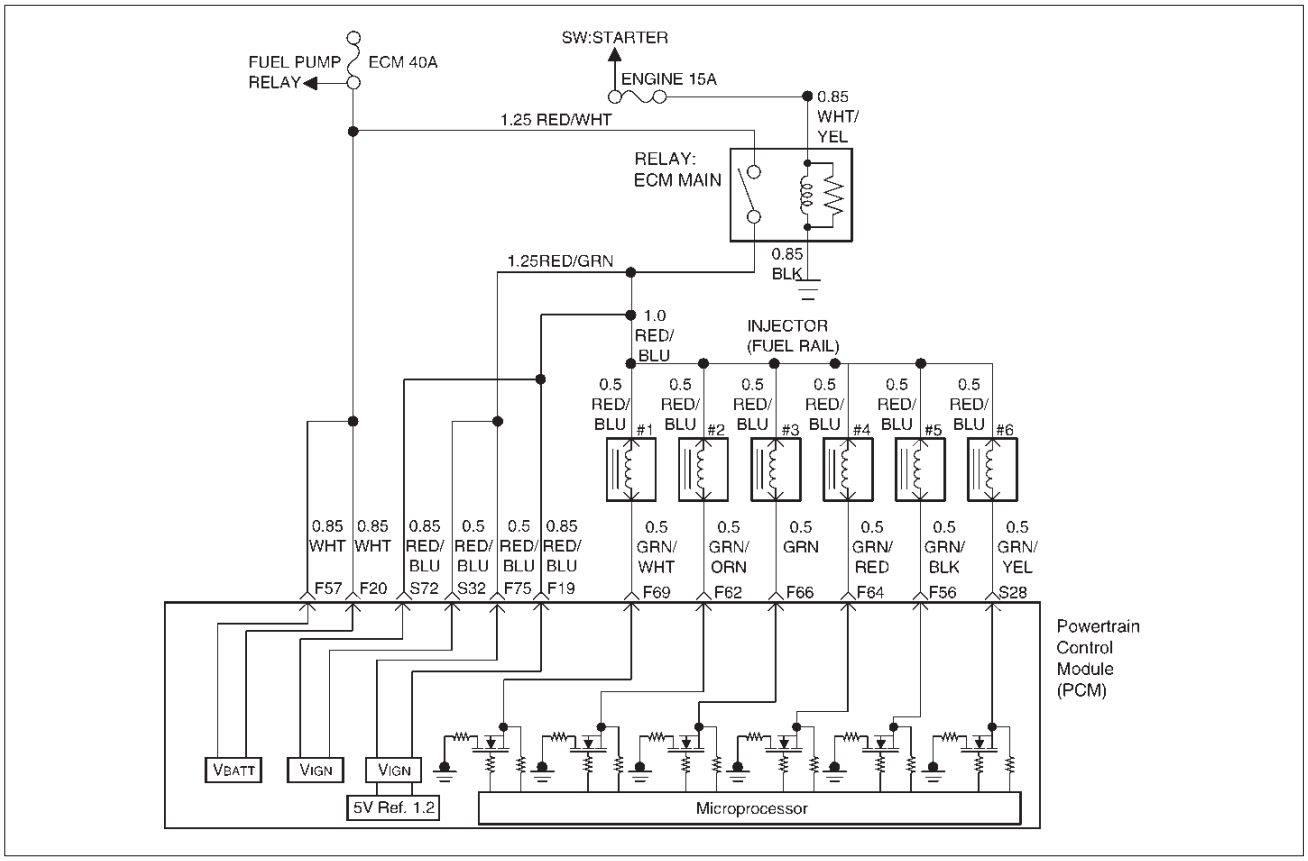

D06RY00073

Circuit Description

The powertrain control module (PCM) monitors the system voltage on the ignition feed terminal to the PCM. A system voltage DTC will set whenever the voltage is below a calibrated value.

Conditions for Setting the DTC

- Ignition “ON.”
- System voltage is below 11.5 volts for 15 minutes.

Action Taken When the DTC Sets

- The PCM will not illuminate the malfunction indicator lamp (MIL).
- The PCM will store as Failure Records conditions which were present when the DTC was set. This information will not be stored as Freeze Frame data.

Conditions for Clearing the MIL/DTC

- A history DTC P0562 will clear after 40 consecutive warm-up cycles have occurred without a fault.
- DTC P0562 can be cleared by using the Tech 2 “Clear Info” function or by disconnecting the PCM battery feed.

Diagnostic Aids

If the DTC sets when an accessory is operated, check for a poor connection or excessive current draw.

Downloaded from www.Manualslib.com manuals search engine

DTC P0562 – System Voltage Low

Step	Action	Value(s)	Yes	No
1	Was the “On-Board Diagnostic (OBD) System Check” performed?	—	Go to *Step 2*	Go to *OBD System Check*
2	Using a DVM, measure the battery voltage at the battery. Is the battery voltage greater than the specified value?	11.5 V	Go to *Step 3*	Charge battery, then go to *Step 3*
3	1. Install a Tech 2. 2. Select “Ignition Volts” on the Tech 2. 3. Start the engine and raise the engine speed to the specified value. 4. Load the electrical system by turning on the headlights, high blower, etc. Is the ignition voltage approximately equal to the specified value?	2000 RPM 12.8-14.1 V	Go to *Step 4*	Go to *Starting/Charging*
4	1. Ignition “OFF.” 2. Disconnect the PCM connector at the PCM. 3. Using a DVM, measure the battery voltage at the PCM connector F-20 and F-57. Is it approximately equal to battery voltage?	—	Check for excessive current draw with ignition “OFF,” engine “OFF.”	Go to *Step 5*
5	1. Check for faulty connections at the PCM harness terminals. 2. Repair as necessary. Was a repair necessary?	—	Verify repair	Go to *Step 6*
6	Check for an open battery feed circuit to the PCM. Is the action complete?	—	Verify repair	Go to *Step 7*
7	Replace the PCM. **IMPORTANT:** The replacement PCM must be programmed. Refer to *On-Vehicle Service* in *Powertrain Control Module and Sensors* for procedures. ANd also refer to latest Service Bulletin. Check to see if the Latest software is released or not. And then Down Load the LATEST PROGRAMMED SOFTWARE to the replacement PCM. Is the action complete?	—	Verify repair	—

Downloaded from www.Manualslib.com manuals search engine

Diagnostic Trouble Code (DTC) P0563 System Voltage High

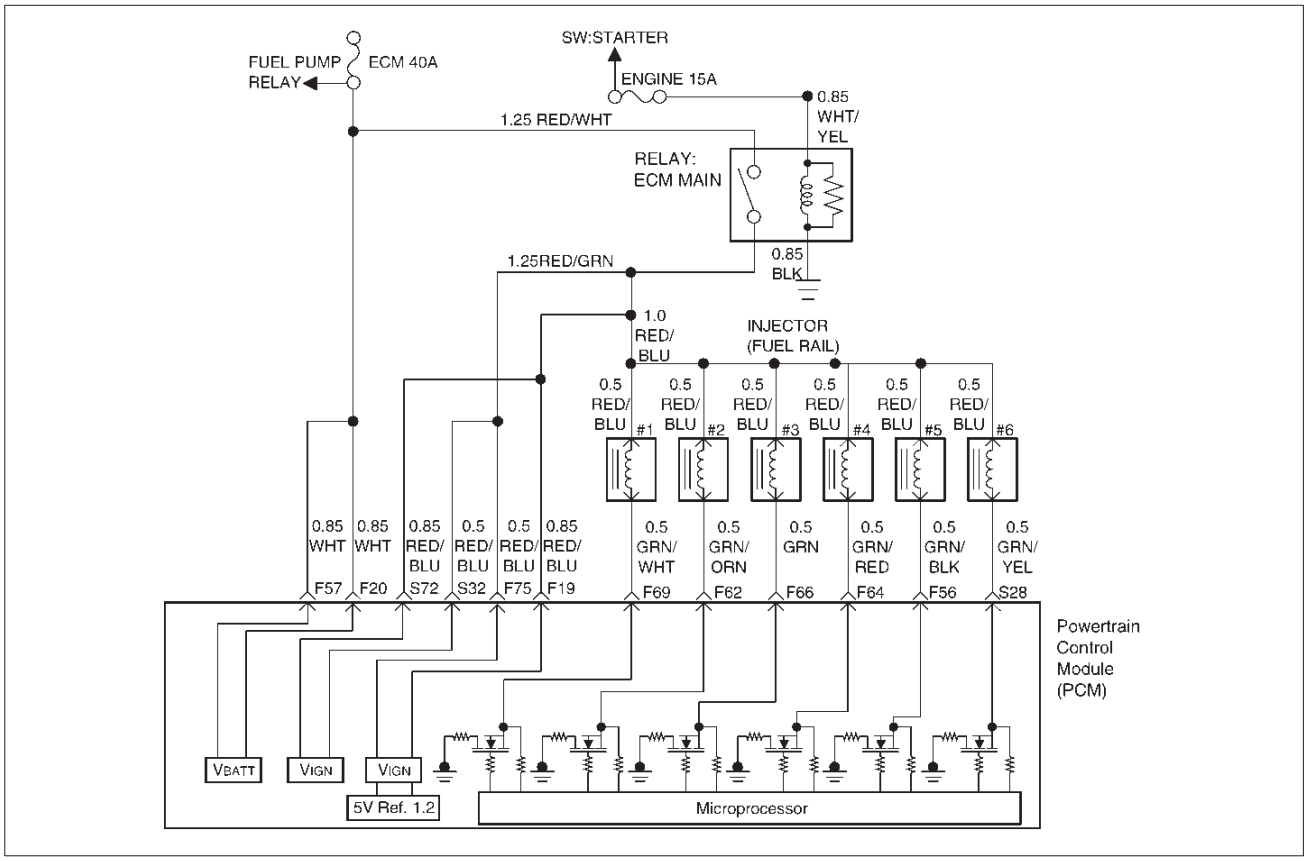

D06RY00073

Circuit Description

The powertrain control module (PCM) monitors the system voltage on the ignition feed terminals to the PCM. A system voltage DTC will set whenever the voltage is above a calibrated value.

Conditions for Setting the DTC

- Ignition “ON.”
- System voltage is above 16 volts for 15 minutes.

Action Taken When the DTC Sets

- The PCM will not illuminate the malfunction indicator lamp (MIL).
- The PCM will store as Failure Records only conditions which were present when the DTC was set. This information will not be stored as Freeze Frame data.

Conditions for Clearing the MIL/DTC

- A history DTC P0563 will clear after 40 consecutive warm-up cycles have occurred without a fault.
- DTC P0563 can be cleared by using the Tech 2 “Clear Info” function or by disconnecting the PCM battery feed.

Diagnostic Aids

If the DTC sets when an accessory is operated, check for a poor connection or excessive current draw.

Downloaded from www.Manualslib.com manuals search engine

DTC P0563 – System Voltage High

Step	Action	Value(s)	Yes	No
1	Was the “ON-Board Diagnostic (OBD) System Check” performed?	—	Go to *Step 2*	Go to *OBD System Check*
2	Using a DVM, measure the battery voltage at the battery. Is the battery voltage less than the specified value?	11.5 V	Go to *Step 3*	Go to *Step 4*
3	1. Charge the battery and clean the battery terminals. 2. Clean the battery ground cable connection if corrosion is indicated. Is the battery voltage less than the specified value?	11.5 V	Replace battery	Go to *Step 4*
4	1. Turn “OFF” all the accessories. 2. Install a Tech 2. 3. Select the ignition voltage parameter on the Tech 2. 4. Start the engine and raise the engine RPM to the specified value. Is the voltage more than 2.5 volts greater than the measurement taken in step 2 or 3?	2000 RPM	Go to *Starting/Charging*	Go to *Step 5*
5	Replace the PCM. **IMPORTANT:** The replacement PCM must be programmed. Refer to *On-Vehicle Service* in *Powertrain Control Module and Sensors* for procedures. ANd also refer to latest Service Bulletin. Check to see if the Latest software is released or not. And then Down Load the LATEST PROGRAMMED SOFTWARE to the replacement PCM. Is the action complete?	—	Verify repair	—

Downloaded from www.Manualslib.com manuals search engine

Diagnostic Trouble Code (DTC) P0601 PCM Memory

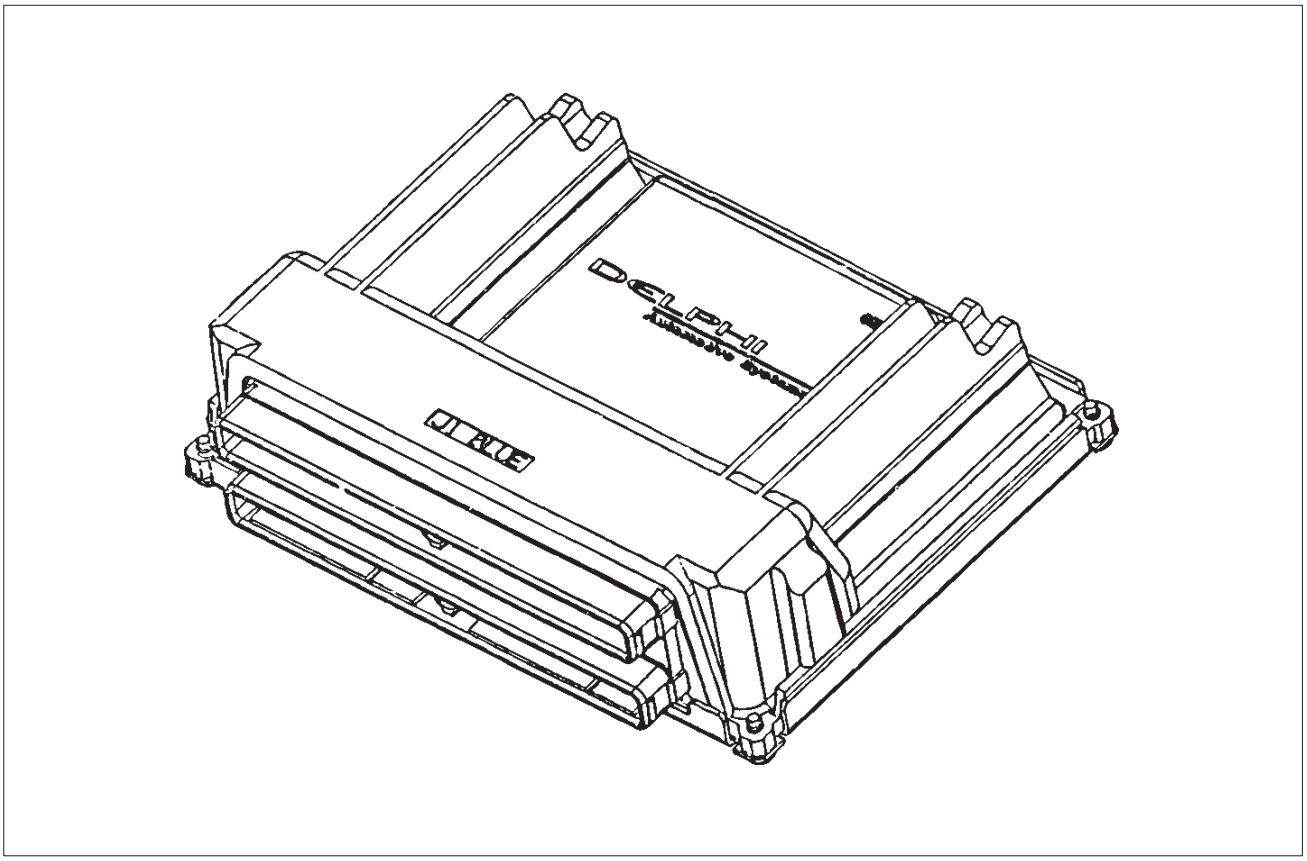

060RY014

Circuit Description

The powertrain control module (PCM) used in this vehicle utilizes an electrically erasable programmable read-only memory (EEPROM). The EEPROM contains program information and the calibrations required for engine, transmission, and powertrain diagnostics operation.
Unlike the PROM used in past applications, the EEPROM is not replaceable. When the PCM is replaced or a calibration update is required, the PCM must be programmed using a Tech 2. Refer to *On-Vehicle Service* in *Powertrain Control Module and Sensors* for the EEPROM programming procedure.

Conditions for Setting the DTC

- The PCM detects an internal program fault (check sum error).

Action Taken When the DTC Sets

- The PCM will not illuminate the malfunction indicator lamp (MIL).
- The PCM will store conditions which were present when the DTC was set in the Failure Records data only.

Conditions for Clearing the MIL/DTC

- The PCM will turn the MIL “OFF” on the third consecutive trip cycle during which the diagnostic has been run and the fault condition is no longer present.
- A history DTC P0601 will clear after 40 consecutive warm-up cycles have occurred without a fault.
- DTC P0601 can be cleared by using the Tech 2 “Clear Info” function or by disconnecting the PCM battery feed.

Diagnostic Aids

- DTC P0601 indicates that the contents of the EEPROM have changed since the PCM was programmed. The only possible repair is PCM replacement. Remember to program the replacement PCM with the correct software and calibration for the vehicle.

Downloaded from www.Manualslib.com manuals search engine

DTC P0601 – PCM Memory

Step	Action	Value(s)	Yes	No
1	Was the “On-Board Diagnostic (OBD) System Check” performed?	—	Go to *Step 2*	Go to *OBD System Check*
2	Replace the PCM. **IMPORTANT:** The replacement PCM must be programmed. Refer to *On-Vehicle Service* in *Powertrain Control Module and Sensors* for procedures. ANd also refer to latest Service Bulletin. Check to see if the Latest software is released or not. And then Down Load the LATEST PROGRAMMED SOFTWARE to the replacement PCM. Is the action complete?	—	Verify repair	—

Downloaded from www.Manualslib.com manuals search engine

Diagnostic Trouble Code (DTC) P0602 PCM Programming Error

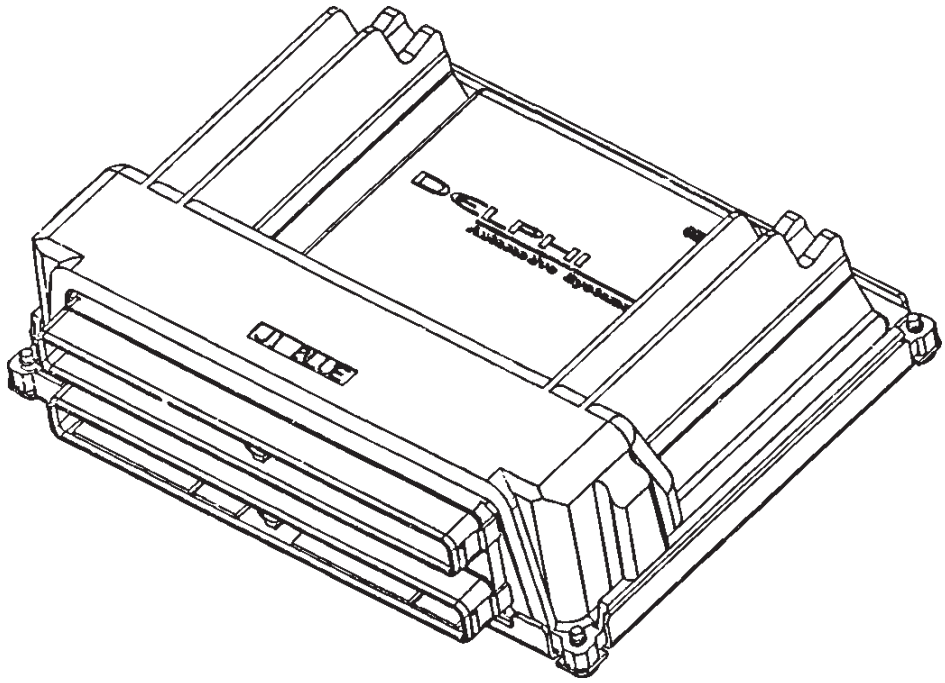

060RY014

Circuit Description

The powertrain control module (PCM) used Main CPU and Watchdog CPU software/calibration.

Conditions for Setting the DTC

- This code detects inconsistencies between Main CPU and Watchdog CPU software/calibration.

Action Taken When the DTC Sets

- The PCM will not illuminate the malfunction indicator lamp (MIL).
- The PCM will store conditions which were present when the DTC was set in the Failure Records data only.

Conditions for Clearing the MIL/DTC

- The PCM will turn the MIL “OFF” on the third consecutive trip cycle during which the diagnostic has been run and the fault condition is no longer present.
- A history DTC P0602 will clear after 40 consecutive warm-up cycles have occurred without a fault.
- DTC P0602 can be cleared by using the Tech 2 “Clear Info” function or by disconnecting the PCM battery feed.

Downloaded from www.Manualslib.com manuals search engine

DTC P0602 – PCM Programming Error

Step	Action	Value(s)	Yes	No
1	Was the “On-Board Diagnostic (OBD) System Check” performed?	—	Go to *Step 2*	Go to *OBD System Check*
2	Replace the PCM. **IMPORTANT:** The replacement PCM must be programmed. Refer to *On-Vehicle Service* in *Powertrain Control Module and Sensors* for procedures. ANd also refer to latest Service Bulletin. Check to see if the Latest software is released or not. And then Down Load the LATEST PROGRAMMED SOFTWARE to the replacement PCM. Is the action complete?	—	Verify repair	—

Downloaded from www.Manualslib.com manuals search engine

Diagnostic Trouble Code (DTC) P0604 PCM RAM Error

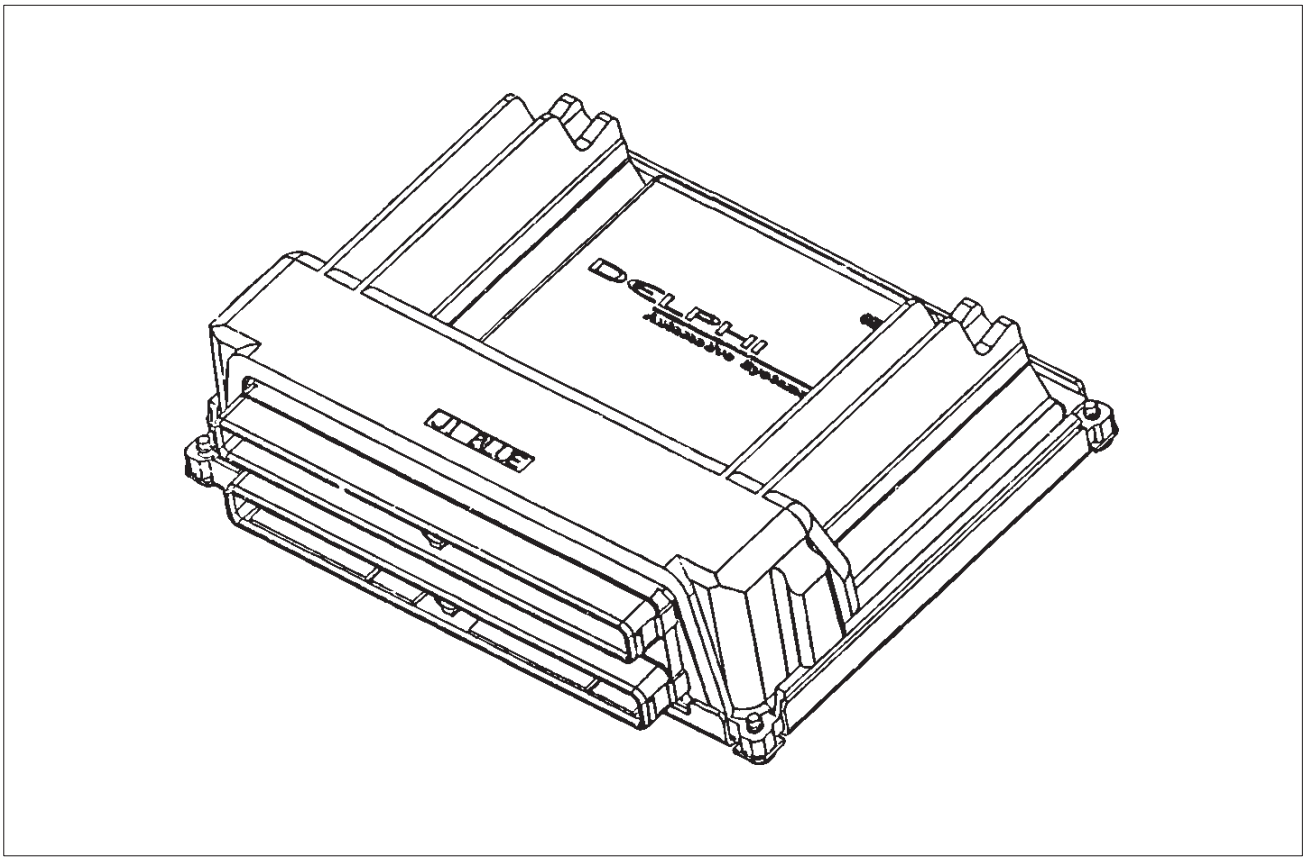

060RY014

Circuit Description

The powertrain control module (PCM) used Main CPU RAM and Watchdog CPU RAM.

Conditions for Setting the DTC

- This code detects inconsistencies between Main CPU RAM and Watchdog CPU RAM.

Action Taken When the DTC Sets

- The PCM will not illuminate the malfunction indicator lamp (MIL).
- The PCM will store conditions which were present when the DTC was set in the Failure Records data only.

Conditions for Clearing the MIL/DTC

- The PCM will turn the MIL “OFF” on the third consecutive trip cycle during which the diagnostic has been run and the fault condition is no longer present.
- A history DTC P0604 will clear after 40 consecutive warm-up cycles have occurred without a fault.
- DTC P0604 can be cleared by using the Tech 2 “Clear Info” function or by disconnecting the PCM battery feed.

Downloaded from www.Manualslib.com manuals search engine

DTC P0604 – PCM RAM Error

Step	Action	Value(s)	Yes	No
1	Was the “On-Board Diagnostic (OBD) System Check” performed?	—	Go to *Step 2*	Go to *OBD System Check*
2	Replace the PCM. **IMPORTANT:** The replacement PCM must be programmed. Refer to *On-Vehicle Service* in *Powertrain Control Module and Sensors* for procedures. ANd also refer to latest Service Bulletin. Check to see if the Latest software is released or not. And then Down Load the LATEST PROGRAMMED SOFTWARE to the replacement PCM. Is the action complete?	—	Verify repair	—

Downloaded from www.Manualslib.com manuals search engine

Diagnostic Trouble Code (DTC) P0606 PCM Internal Performance

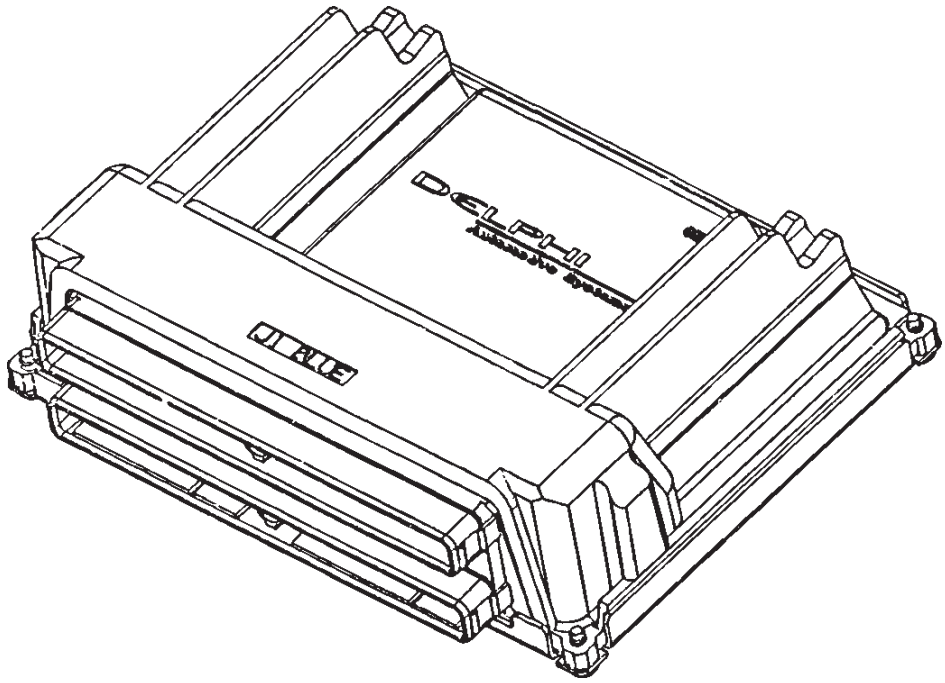

060RY014

Circuit Description

The input/output devices in the PCM include analog-to-digital converters, signal buffers, counters, and special drivers. The PCM controls most components with electronic switches which complete a ground circuit when turned “ON”. These switches are arranged in groups of 4 and 7, called either a surface-mounted quad driver module (QDM), which can independently control up to 4 output terminals, or QDMs which can independently control up to 7 outputs.

Conditions for Setting the DTC

- This code detects inconsistencies between Main CPU A/D converters and Watchdog CPU A/D converters.

Action Taken When the DTC Sets

- The PCM will not illuminate the malfunction indicator lamp (MIL).
- The PCM will store conditions which were present when the DTC was set in the Failure Records data only.

Conditions for Clearing the MIL/DTC

- The PCM will turn the MIL “OFF” on the third consecutive trip cycle during which the diagnostic has been run and the fault condition is no longer present.
- A history DTC P0606 will clear after 40 consecutive warm-up cycles have occurred without a fault.
- DTC P0606 can be cleared by using the Tech 2 “Clear Info” function or by disconnecting the PCM battery feed.

Downloaded from www.Manualslib.com manuals search engine

DTC P0606 – PCM Internal Performance

Step	Action	Value(s)	Yes	No
1	Was the “On-Board Diagnostic (OBD) System Check” performed?	—	Go to *Step 2*	Go to *OBD System Check*
2	Replace the PCM. **IMPORTANT:** The replacement PCM must be programmed. Refer to *On-Vehicle Service* in *Powertrain Control Module and Sensors* for procedures. ANd also refer to latest Service Bulletin. Check to see if the Latest software is released or not. And then Down Load the LATEST PROGRAMMED SOFTWARE to the replacement PCM. Is the action complete?	—	Verify repair	—

Downloaded from www.Manualslib.com manuals search engine

Diagnostic Trouble Code (DTC)
P1106 MAP Sensor Circuit Intermittent High Voltage

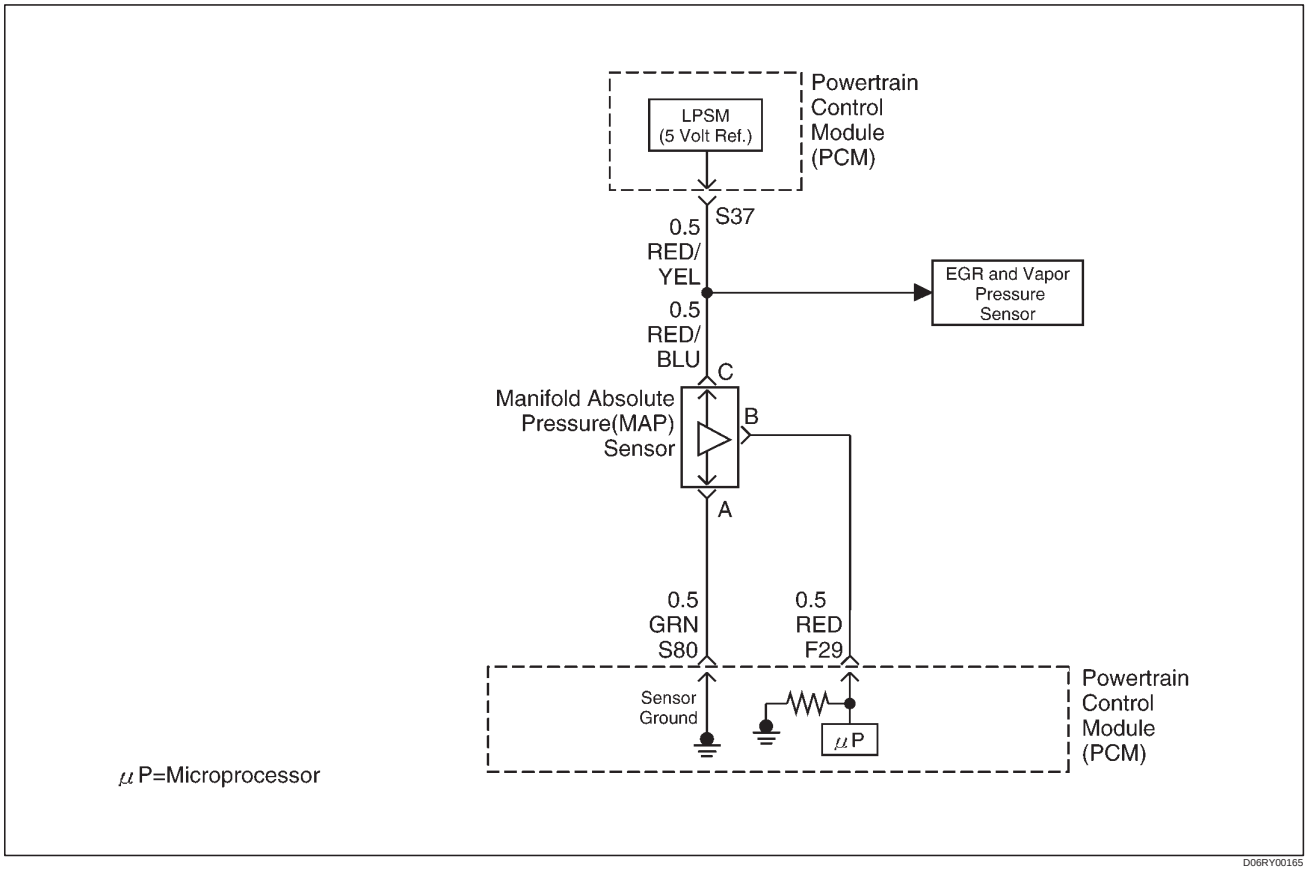

Circuit Description

The manifold absolute pressure (MAP) sensor responds to changes in intake manifold pressure (vacuum). The MAP sensor signal voltage to the PCM varies from below 2 volts at idle (high vacuum) to above 4 volts with the ignition "ON," engine not running or at wide-open throttle (low vacuum).

The MAP sensor is used to determine manifold pressure changes while the liner EGR flow test diagnostic is being run (refer to *DTC P0401*), to determine engine vacuum level for some other diagnostics and to determine barometric pressure (BARO). The PCM compares the MAP sensor signal to a calculated MAP based on throttle position and various engine load factors. If the PCM detects a MAP signal that is intermittently above the calculated value, DTC P1106 will set.

Conditions for Setting the DTC

- No TP sensor DTCs are present.
- Engine is running for at least 10 seconds.
- Throttle angle is below 3% if engine speed is below 1000 RPM.
- Throttle angle is below 10% if engine speed is above 1000 RPM.
- The MAP sensor indicates an intermittent manifold absolute pressure above 80 kPa for a total of approximately 5 seconds over a 16-second period of time.

Action Taken When the DTC Sets

- The PCM will not illuminate the malfunction indicator lamp (MIL).
- The PCM will store conditions which were present when the DTC was set as Failure Records data only. This information will not be stored as Freeze Frame data.

Conditions for Clearing the MIL/DTC

- A history DTC P1106 will clear after 40 consecutive warm-up cycles have occurred without a fault.
- DTC P1106 can be cleared by using the Tech 2 "Clear Info" function or by disconnecting the PCM battery feed.

Diagnostic Aids

Check for the following conditions:

- Leaking or plugged vacuum supply line to the MAP sensor.
- Inspect PCM harness connectors for backed-out terminals, improper mating, broken locks, improperly formed or damaged terminals, and poor terminal-to-wire connection.
- Inspect the wiring harness for damage. If the harness appears to be OK, observe the MAP display on the Tech 2 while moving connectors and wiring harnesses related to the sensor. A change in the display will indicate the location of the fault.

Downloaded from www.Manualslib.com manuals search engine

Reviewing the Failure Records vehicle mileage since the diagnostic test last failed may help determine how often the condition that caused the DTC to be set occurs. This may assist in diagnosing the condition.

- The MAP sensor shares a 5 Volt Reference with the Fuel Tank Pressure sensor. Check the 5 Volt reference if this DTC is also set.
- The MAP sensor shares a ground with the Fuel Tank Pressure sensor and the ECT Sensor. Check the ground if these other DTCs are also set.

DTC P1106 – MAP Sensor Circuit Intermittent High Voltage

Step	Action	Value(s)	Yes	No
1	Was the “On-Board Diagnostic (OBD) System Check” performed?	—	Go to *Step 2*	Go to *OBD System Check*
2	Is DTC P0108 also set?	—	Go to *DTC P0108* chart first	Go to *Step 3*
3	Are DTC P1111, P1115, and/or P1120 also set?	—	Go to *Step 6*	Go to *Step 4*
4	Check for a poor sensor ground circuit terminal connection at the MAP sensor. Was a problem found?	—	Go to *Step 9*	Go to *Step 5*
5	Check the MAP signal circuit between the MAP sensor connector and the PCM for an intermittent short to voltage. Was a problem found?	—	Go to *Step 10*	Go to *Step 8*
6	Check for an intermittent short to voltage on the 5 volt reference circuit between the PCM and the following components: ● MAP sensor ● EGR valve ● TP sensor Was a problem found?	—	Go to *Step 10*	Go to *Step 7*
7	Check for a poor sensor ground circuit terminal connection at the PCM. Was a problem found?	—	Go to *Step 9*	Go to *Step 8*
8	Check for an intermittent open or a faulty splice in the sensor ground circuit. Was a problem found?	—	Go to *Step 10*	Refer to *Diagnostic Aids*
9	Replace the faulty harness connector terminal for the sensor ground circuit. Is the action complete?	—	Verify repair	—
10	Locate and repair the intermittent open/short circuit in the wiring harness as necessary. Is the action complete?	—	Verify repair	—

Downloaded from www.Manualslib.com manuals search engine

Diagnostic Trouble Code (DTC) P1107 MAP Circuit Intermittent Low Voltage

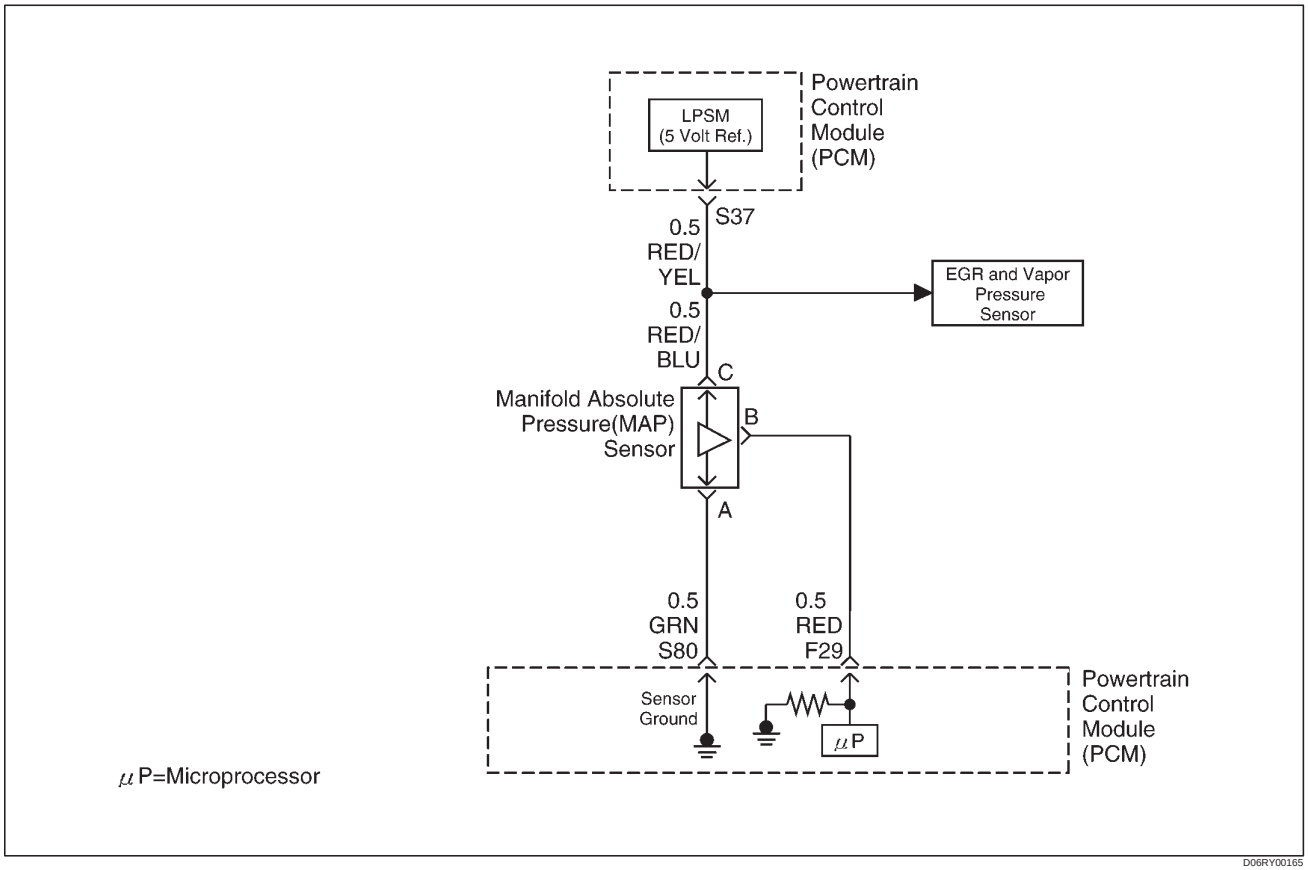

Circuit Description

The manifold absolute pressure (MAP) sensor responds to changes in intake manifold pressure (vacuum). The MAP sensor signal voltage to the powertrain control module (PCM) varies from below 2 volts at idle (high vacuum) to above 4 volts with the ignition "ON," engine not running or at wide-open throttle (low vacuum).

The MAP sensor is used to determine manifold pressure changes while the linear EGR flow test diagnostic is being run (refer to *DTC P0401*), to determine engine vacuum level for some other diagnostics and to determine barometric pressure (BARO). The PCM compares the MAP sensor signal to a calculated MAP based on throttle position and various engine load factors. If the PCM detects a MAP signal that is intermittently below the calculated value, DTC P1107 will be set.

Conditions for Setting the DTC

- No TP sensor DTCs are present.
- Engine is running.
- Ignition voltage is more than 11 volts.
- Throttle angle is above 1% if engine speed is less than 1000 RPM.
- Throttle angle is above 2% if engine speed is above 1000 RPM.
- The MAP sensor indicates an intermittent manifold absolute pressure below 11 kPa for a total of approximately 5 seconds over a 16-second period of time.

Action Taken When the DTC Sets

- The PCM will not illuminate the malfunction indicator lamp (MIL).
- The PCM will store conditions which were present when the DTC was set as Failure Records data only. This information will not be stored as Freeze Frame data.

Conditions for Clearing the MIL/DTC

- A history DTC P1107 will Clear after 40 consecutive warm-up cycles have occurred without a fault.
- DTC P1107 can be cleared by using the Tech 2 "Clear Info" function or by disconnecting the PCM battery feed.

Diagnostic Aids

Check for the following conditions:

- Poor connection at PCM – Inspect harness connectors for backed-out terminals, improper mating, broken locks, improperly formed or damaged terminals, and poor terminal-to-wire connection.
- The MAP Sensor shares a 5 Volt reference with the EGR Valve. If these codes are also set, it could indicate a problem with the 5 Volt reference circuit or components itself.
- The MAP Sensor share a ground with the EGR Valve and the IAT Sensor.
- Damaged harness – Inspect the wiring harness for damage. If the harness appears to be OK, observe the MAP display on the Tech 2 while moving connectors

Downloaded from www.Manualslib.com manuals search engine

and wiring harnesses related to the sensor. A change in the display will indicate the location of the fault.

Reviewing the Failure Records vehicle mileage since the diagnostic test last failed may help determine how often the condition that caused the DTC to be set occurs. This may assist in diagnosing the condition.

DTC P1107 – MAP Sensor Circuit Intermittent Low Voltage

Step	Action	Value(s)	Yes	No
1	Was the "On-Board Diagnostic (OBD) System Check" performed?	—	Go to *Step 2*	Go to *OBD System Check*
2	Is DTC P0107 also set?	—	Go to *DTC P0107* chart first	Go to *Step 3*
3	Check for a poor 5 volt reference circuit or MAP signal circuit terminal connection at the MAP sensor. Was a problem found?	—	Go to *Step 8*	Go to *Step 4*
4	Check the MAP signal circuit between the MAP sensor connector and the PCM for an intermittent open or short to ground. Was a problem found?	—	Go to *Step 9*	Go to *Step 7*
5	Check for an intermittent short to ground on the 5 volt reference circuit between the PCM and the following components: • MAP sensor • EGR valve • TP sensor Was a problem found?	—	Go to *Step 9*	Go to *Step 6*
6	Check for a poor 5 volt reference terminal connection at the PCM. Was a problem found?	—	Go to *Step 8*	Go to *Step 7*
7	Check for an intermittent open or a faulty splice in the 5 volt reference circuit. Was a problem found? (If no, start with the diagnosis chart for other sensors in the circuit and see if 5V returns.)	—	Go to *Step 9*	Refer to *Diagnostic Aids*
8	Replace the faulty harness connector terminal(s) for the 5 volt reference circuit and/or the MAP signal circuit as necessary. Is the action complete?	—	Verify repair	—
9	Repair intermittent open/short circuit in the wiring harness as necessary. Is the action complete?	—	Verify repair	—

Downloaded from www.Manualslib.com manuals search engine

Diagnostic Trouble Code (DTC)
P1111 IAT Sensor Circuit Intermittent High Voltage

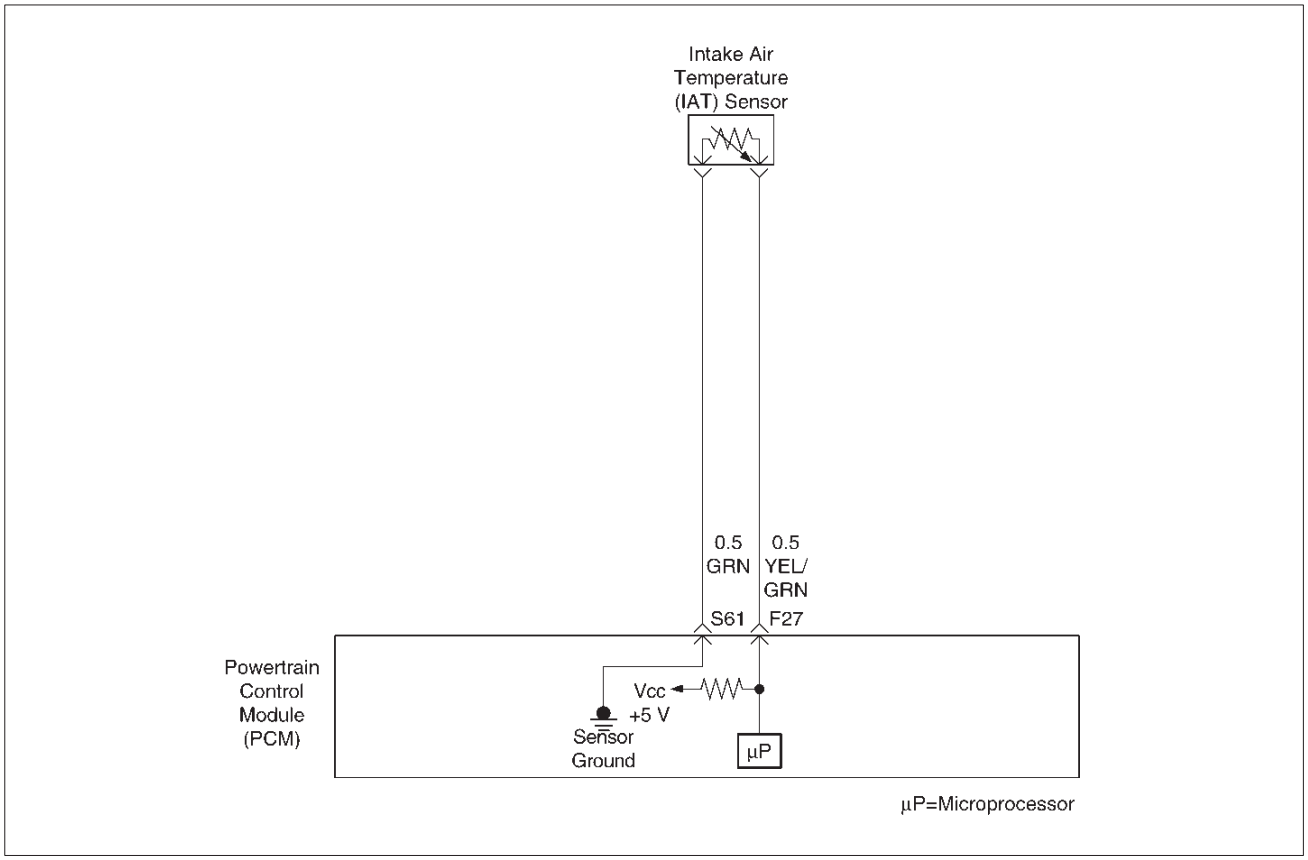

D06RY00168

Circuit Description

The intake air temperature (IAT) sensor is a thermistor which measures the temperature of the air entering the engine. The powertrain control module (PCM) applies 5 volts through a pull-up resistor to the IAT sensor. When the intake air is cold, the sensor resistance is high and the PCM will monitor a high signal voltage on the IAT signal circuit. If the intake air is warm, the sensor resistance is lower causing the PCM to monitor a lower voltage. DTC P1111 will set when the PCM intermittently detects an excessively high signal voltage on the intake air temperature sensor signal circuit.

Conditions for Setting the DTC

- The engine has been running for over 4 minutes.
- Vehicle speed is less than 32 km/h (20 mph).
- Engine coolant temperature is above 60˚C (140˚F).
- Mass air flow is less than 20g/second.
- IAT signal voltage indicates and intake air temperature intermittently less than –39˚C (–38˚F) (about 5 volts) for approximately 2.5 seconds over a 25-second period of time.

Action Taken When the DTC Sets

- The PCM will substitute a default value for intake air temperature.
- The PCM will store conditions which were present when the DTC set as Failure Records data only. This information will not be stored as Freeze Frame data.
- DTC P1111 does not illuminate the MIL.

Conditions for Clearing the MIL/DTC

- A history DTC P1111 will clear after 40 consecutive warm-up cycles have occurred without a fault.
- DTC P1111 can be cleared by using the Tech 2 “Clear Info” function or by disconnecting the PCM battery feed.

Diagnostic Aids

Check for the following conditions:

- Poor connection at PCM –Inspect harness connectors for backed-out terminals, improper mating, broken locks, improperly formed or damaged terminals, and poor terminal-to-wire connection.
- Damaged harness – Inspect the wiring harness for damage. If the harness appears to be OK, observe the IAT display on the Tech 2 while moving connectors and wiring harnesses related to the IAT sensor. A change in the IAT display will indicate the location of the fault.

Reviewing the Failure Records vehicle mileage since the diagnostic test last failed may help determine how often the condition that caused the DTC to be set occurs. This may assist in diagnosing the condition.

Downloaded from www.Manualslib.com manuals search engine

Intake Air Temperature Sensor

˚C	˚F	OHMS
Temperature vs. Resistance Values (approximate)		
100	212	177
80	176	332
60	140	667
45	113	1188
35	95	1802
25	77	2796
15	59	4450
5	41	7280
–5	23	12300
–15	5	21450
–30	–22	52700
–40	–40	100700

Downloaded from www.Manualslib.com manuals search engine

DTC P1111 –IAT Sensor Circuit Intermittent High Voltage

Step	Action	Value(s)	Yes	No
1	Was the “On-Board Diagnostic (OBD) System Check” performed?	—	Go to *Step 2*	Go to *OBD System Check*
2	Is DTC P0113 also set?	—	Go to *DTC P0113* chart first	Go to *Step 3*
3	Is DTC P1115, also set?	—	Go to *Step 6*	Go to *Step 4*
4	1. Check for a poor sensor ground circuit terminal connection at the IAT sensor. 2. If a problem is found, repair as necessary. Was a problem found?	—	Verify repair	Go to *Step 5*
5	1. Check for a poor IAT signal circuit terminal connection at the IAT sensor. 2. If a problem is found, repair as necessary. Was a problem found?	—	Verify repair	Go to *Step 6*
6	1. Check the IAT signal circuit between the IAT sensor connector and the PCM for an intermittent open. 2. If a problem is found, repair as necessary. Was a problem found?	—	Verify repair	Go to *Step 7*
7	1. Check the IAT signal circuit between the IAT sensor connector and the PCM for an intermittent short to voltage. 2. If a problem is found, repair as necessary. Was a problem found?	—	Verify repair	Go to *Step 8*
8	1. Check for a poor sensor ground circuit terminal connection at the PCM. 2. If a problem is found, repair as necessary. Was a problem found?	—	Verify repair	Go to *Step 9*
9	1. Check for an intermittent open or a faulty splice in the sensor ground circuit. 2. If a problem is found, repair as necessary. Was a problem found?	—	Verify repair	Refer to *Diagnostic Aids*

Downloaded from www.Manualslib.com manuals search engine

Diagnostic Trouble Code (DTC)
P1112 IAT Sensor Circuit Intermittent Low Voltage

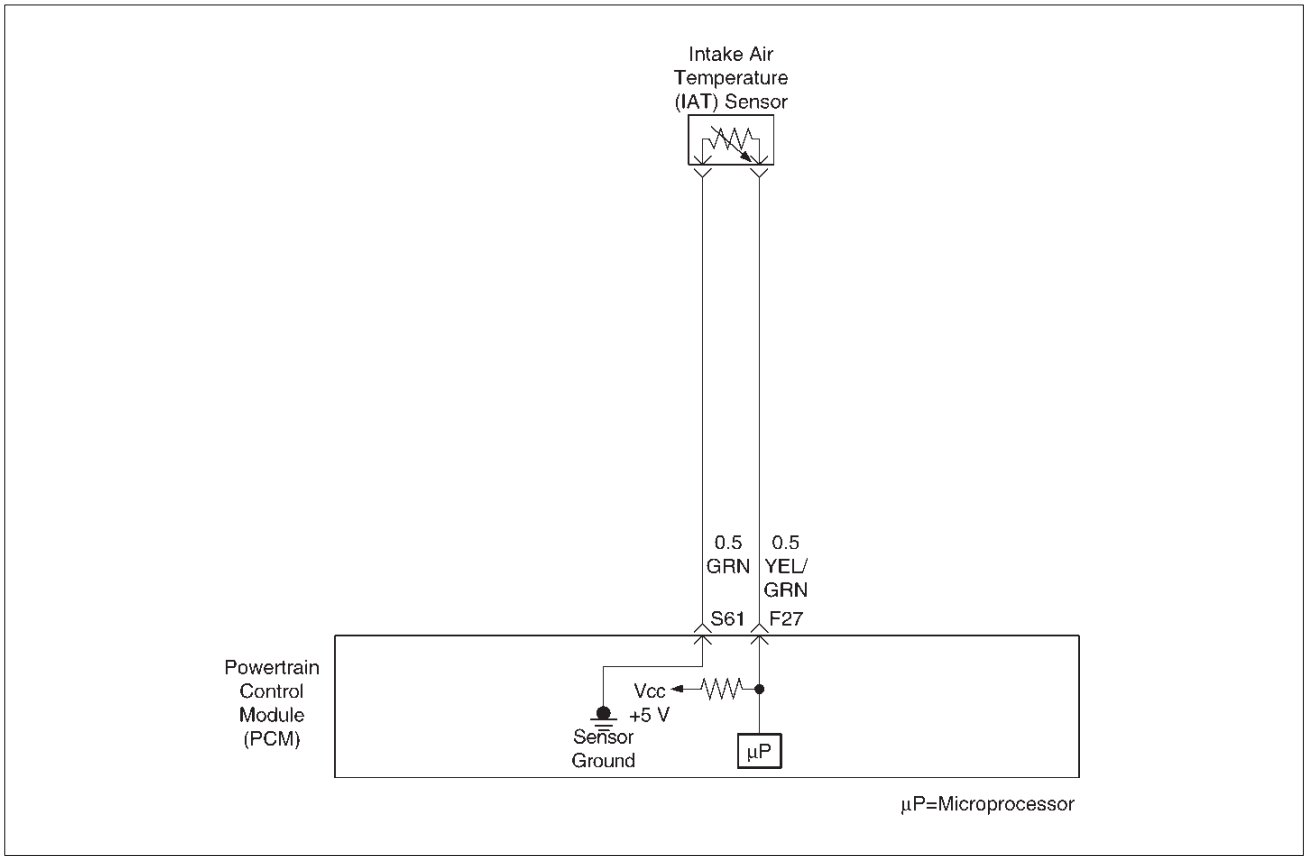

D06RY00168

Circuit Description

The intake air temperature (IAT) sensor is a thermistor which measures the temperature of the air entering the engine. The powertrain control module (PCM) applies 5 volts through a pull-up resistor to the IAT sensor. When the intake air is cold, the sensor resistance is high and the PCM will monitor a high signal voltage on the IAT signal circuit. If the intake air is warm, the sensor resistance becomes lower, causing the PCM to monitor a lower voltage. DTC P1112 will set when the PCM intermittently detects an excessively low signal voltage on the intake air temperature sensor signal circuit.

Conditions for Setting the DTC

- The engine has been running for over 2 minutes.
- Vehicle speed is greater than 48 km/h (30 mph).
- IAT signal voltage is greater than 148˚C (298˚F) (about 0.10 volt) for a total of 2.5 seconds over a 25-second period of time.

Action Taken When the DTC Sets

- The PCM will not illuminate the malfunction indicator lamp (MIL).
- The PCM will store conditions which were present when the DTC was set as Failure Records data only. This information will not be stored as Freeze Frame data.
- The PCM will substitute a default value for intake air temperature.

Conditions for Clearing the MIL/DTC

- A history DTC P1112 will clear after 40 consecutive warm-up cycles have occurred without a fault.
- DTC P1112 can be cleared by using the Tech 2 “Clear Info” function or by disconnecting the PCM battery feed.

Diagnostic Aids

Check for the following conditions:

- Poor connection at PCM – Inspect harness connectors for backed-out terminals, improper mating, broken locks, improperly formed or damaged terminals, and poor terminal-to-wire connection.
- Damaged harness – Inspect the wiring harness for damage. If the harness appears to be OK, observe the IAT display on the Tech 2 while moving connectors and wiring harnesses related to the IAT sensor. A change in the IAT display will indicate the location of the fault.

Reviewing the Failure Records vehicle mileage since the diagnostic test last failed may help determine how often the condition that caused the DTC to be set occurs. This may assist in diagnosing the condition.

Test Description

Number(s) below refer to the step number(s) on the Diagnostic Chart.

Downloaded from www.Manualslib.com manuals search engine

2. Verifies that the fault is present.
3. If DTC P1112 can be repeated only by duplicating the Failure Records conditions, refer to the "Temperature vs. Resistance Value Chart." The chart may be used to test the IAT sensor at various temperatures to evaluate the possibility of a "shifted" sensor that may be shorted above or below a certain temperature. If this is the case, replace the IAT sensor.

Intake Air Temperature Sensor

˚C	˚F	OHMS
Temperature vs. Resistance Values (approximate)		
100	212	177
80	176	332
60	140	667
45	113	1188
35	95	1802
25	77	2796
15	59	4450
5	41	7280
–5	23	12300
–15	5	21450
–30	–22	52700
–40	–40	100700

DTC P1112 – IAT Sensor Circuit Intermittent Low Voltage

Step	Action	Value(s)	Yes	No
1	Was the "On-Board Diagnostic (OBD) System Check" performed?	—	Go to *Step 2*	Go to *OBD System Check*
2	Is DTC P0112 also set?	—	Go to *DTC P0112* first	Go to *Step 3*
3	1. Check the IAT signal circuit between the IAT sensor connector and the PCM for an intermittent short to ground. 2. If a problem is found, repair as necessary. Was a problem found?	—	Verify repair	Refer to *Diagnostic Aids*

Downloaded from www.Manualslib.com manuals search engine

Diagnostic Trouble Code (DTC) P1114 ECT Sensor Circuit Intermittent Low Voltage

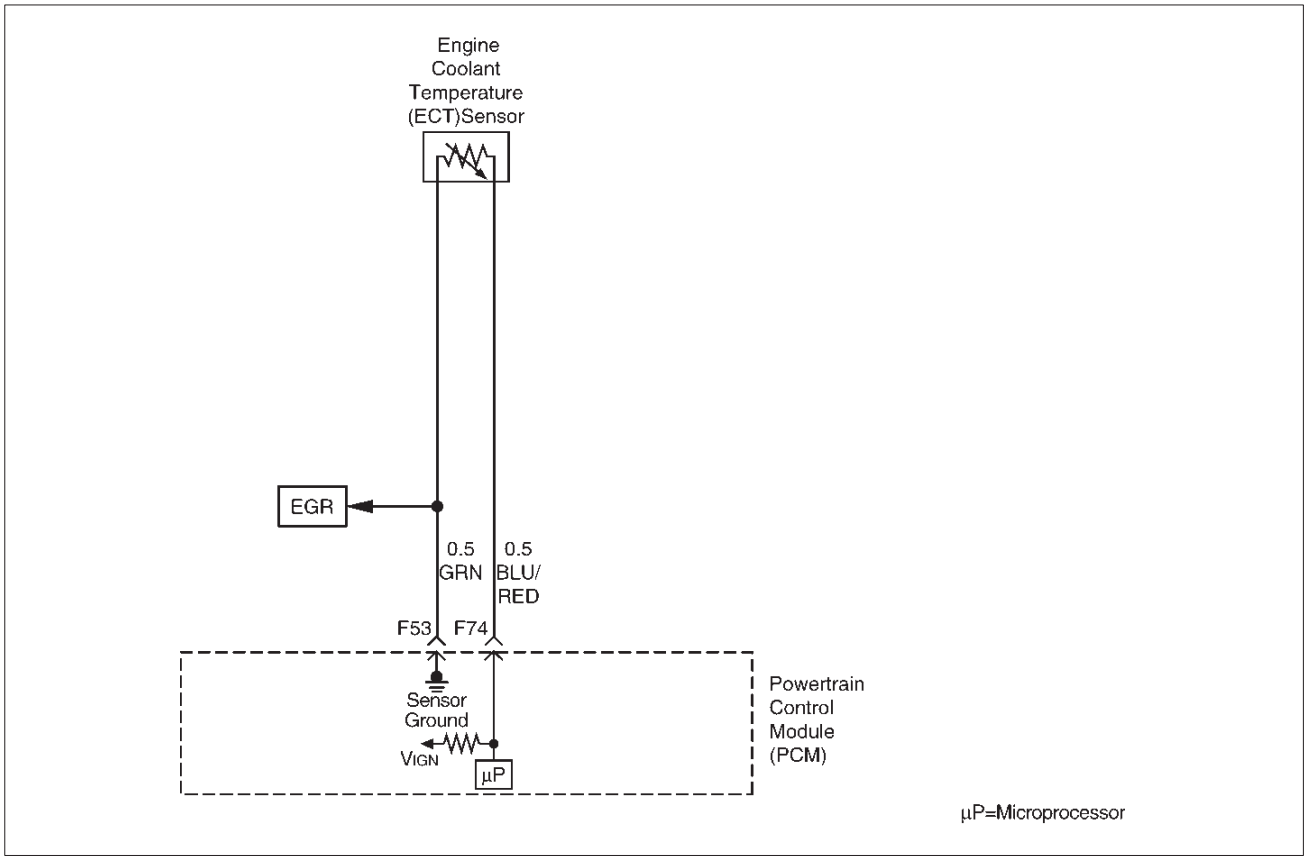

D06RY00169

Circuit Description

The engine coolant temperature (ECT) sensor is a thermistor mounted in the engine coolant stream. The powertrain control module (PCM) applies a voltage (about 5.0 volts) through a pull-up resistor to the ECT signal circuit. When the engine coolant is cold, the sensor (thermistor) resistance is high, therefore the PCM will measure a high signal voltage. As the engine coolant warms, the sensor resistance becomes less, and the ECT signal voltage measured at the PCM drops. With a fully warmed up engine, the ECT signal voltage should measure about 1.5 to 2.0 volts. If the PCM detects an ECT signal that is intermittently below the range of the ECT sensor, DTC P1114 will set.

Conditions for Setting the DTC

- Engine run time longer than 60 seconds.
- The ECT sensor signal is intermittently greater than 150˚C (302˚F) (about 0.10 volt) for a total of 10 seconds over a 100-second period.

Action Taken When the DTC Sets

- The PCM will not illuminate the malfunction indicator lamp (MIL).
- The PCM will store conditions which were present when the DTC set as Failure Records data only. This information will not be stored as Freeze Frame data.

Conditions for Clearing the MIL/DTC

- A history DTC P1114 will clear after 40 consecutive warm-up cycles have occurred without a fault.
- DTC P1114 can be cleared by using the Tech 2 “Clear Info” function or by disconnecting the PCM battery feed.

Diagnostic Aids

Check for the following conditions:

- Poor connection at PCM – Inspect harness connectors for backed-out terminals, improper mating, broken locks, improperly formed or damaged terminals, and poor terminal-to-wire connection.
- Damaged harness – Inspect the wiring harness for damage. If the harness appears to be OK, observe the ECT display on the Tech 2 while moving connectors and wiring harnesses related to the ECT sensor. A change in the ECT display will indicate the location of the fault.

Reviewing the Failure Records vehicle mileage since the diagnostic test last failed may help determine how often

Downloaded from www.Manualslib.com manuals search engine

the condition that caused the DTC to be set occurs. This may assist in diagnosing the condition.

Engine Coolant Temperature Sensor

˚C	˚F	OHMS
Temperature vs. Resistance Values (approximate)		
100	212	177
80	176	332
60	140	667
45	113	1188
35	95	1802
25	77	2796
15	59	4450
5	41	7280
–5	23	12300
–15	5	21450
–30	–22	52700
–40	–40	100700

DTC P1114 – ECT Circuit Intermittent Low Voltage

Step	Action	Value(s)	Yes	No
1	Was the “On-Board Diagnostic (OBD) System Check” performed?	—	Go to *Step 2*	Go to *OBD System Check*
2	Is DTC P0117 also set?	—	Go to *DTC P0117* first	Go to *Step 3*
3	1. Check the ECT signal circuit between the ECT sensor connector and the PCM for an intermittent short to ground. 2. If a problem is found, repair as necessary. Was a problem found?	—	Verify repair	Refer to *Diagnostic Aids*

Downloaded from www.Manualslib.com manuals search engine

Diagnostic Trouble Code (DTC) P1115 ECT Sensor Circuit Intermittent High Voltage

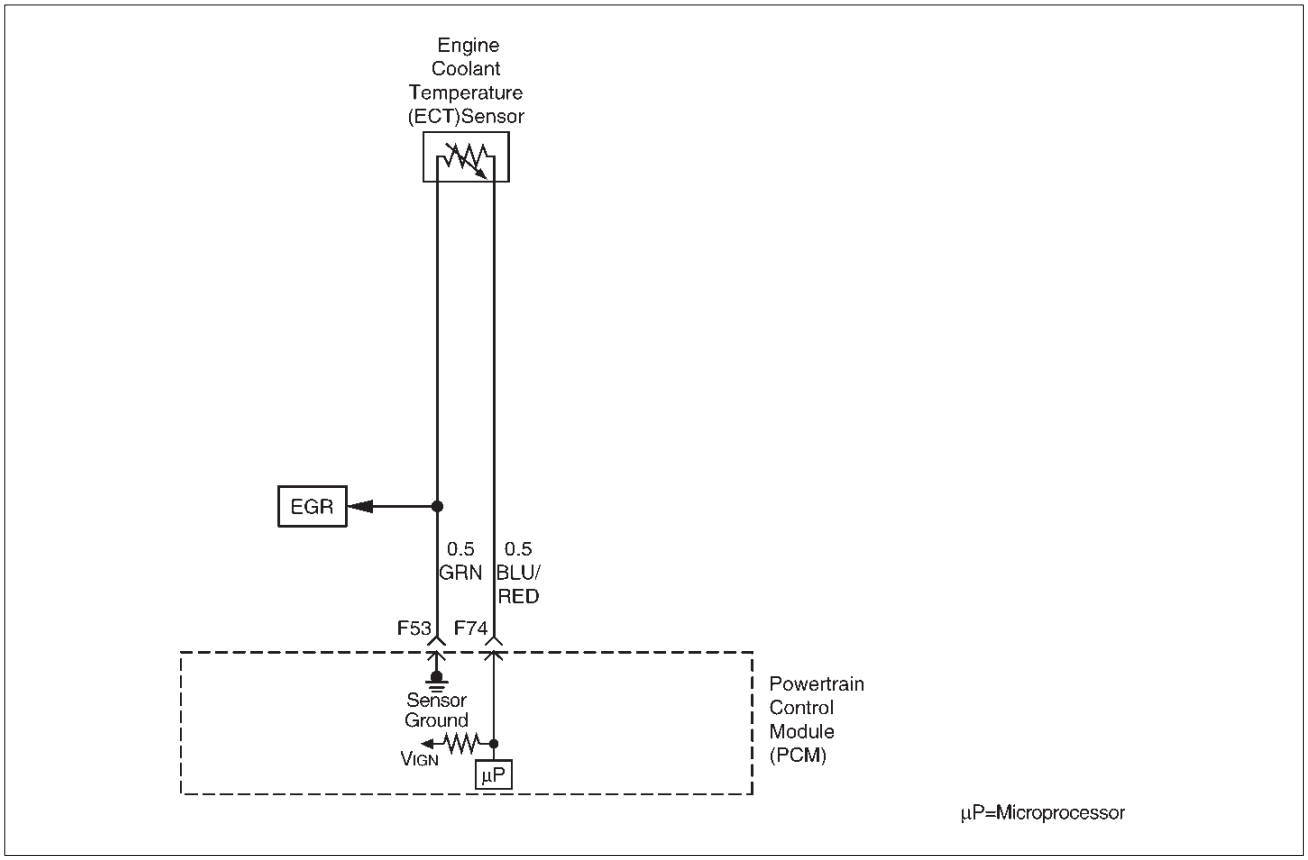

D06RY00169

Circuit Description

The engine coolant temperature (ECT) sensor is a thermistor mounted in the engine coolant stream. The powertrain control module (PCM) applies a voltage (about 5.0 volts) through a pull-up resistor to the ECT signal circuit. When the engine coolant is cold, the sensor (thermistor) resistance is high, therefore the PCM will measure a high signal voltage. As the engine coolant warms, the sensor resistance becomes less, and the ECT signal voltage measured at the PCM drops. With a fully warmed up engine, the ECT signal voltage should measure about 1.5 to 2.0 volts. If the PCM detects an ECT signal that is intermittently above the range of the ECT sensor, DTC P1115 will set.

Conditions for Setting the DTC

- Engine running time longer than 90 seconds.
- The ECT sensor signal is intermittently greater than –39˚C (–38˚F) (about 5 volts) for a total of 10 seconds over a 100-second period.

Action Taken When the DTC Sets

- The PCM will not illuminate the malfunction indicator lamp (MIL).
- The PCM will store conditions which were present when the DTC was set as Failure Records data only. This information will not be stored as Freeze Frame data.

Conditions for Clearing the MIL/DTC

- A history DTC P1115 will clear after 40 consecutive warm-up cycles have occurred without a fault.
- DTC P1115 can be cleared by using the Tech 2 “Clear Info” function or by disconnecting the PCM battery feed.

Diagnostic Aids

Check for the following conditions:

- Poor connection at PCM – Inspect harness connectors for backed-out terminals, improper mating, broken locks, improperly formed or damaged terminals, and poor terminal-to-wire connection.
- Damaged harness – Inspect the wiring harness for damage. If the harness appears to be OK, observe the ECT display on the Tech 2 while moving connectors and wiring harnesses related to the ECT sensor. A change in the ECT display will indicate the location of the fault.

Reviewing the Failure Records vehicle mileage since the diagnostic test last failed may help determine how often

Downloaded from www.Manualslib.com manuals search engine

the condition that caused the DTC to be set occurs. This may assist in diagnosing the condition.

Engine Coolant Temperature Sensor

˚C	˚F	OHMS
Temperature vs. Resistance Values (approximate)		
100	212	177
80	176	332
60	140	667
45	113	1188
35	95	1802
25	77	2796
15	59	4450
5	41	7280
–5	23	12300
–15	5	21450
–30	–22	52700
–40	–40	100700

Downloaded from www.Manualslib.com manuals search engine

DTC P1115 – ECT Sensor Circuit Intermittent High Voltage

Step	Action	Value(s)	Yes	No
1	Was the “On-Board Diagnostic (OBD) System Check” performed?	—	Go to *Step 2*	Go to *OBD System Check*
2	Is DTC P0118 also set?	—	Go to *DTC P0118* chart first	Go to *Step 3*
3	Is DTC P1111 also set?	—	Go to *Step 8*	Go to *Step 4*
4	1. Check for a poor sensor ground circuit terminal connection at the ECT sensor. 2. If a problem is found, repair as necessary. Was a problem found?	—	Verify repair	Go to *Step 5*
5	1. Check for a poor ECT signal circuit terminal connection at the ECT sensor. 2. If a problem is found, repair as necessary. Was a problem found?	—	Verify repair	Go to *Step 6*
6	1. Check the ECT signal circuit between the ECT sensor connector and the PCM for an intermittent open. 2. If a problem is found, repair as necessary. Was a problem found?	—	Verify repair	Go to *Step 7*
7	1. Check the ECT signal circuit between the ECT sensor connector and the PCM for an intermittent short to voltage. 2. If a problem is found, repair as necessary. Was a problem found?	—	Verify repair	Go to *Step 8*
8	1. Check for a poor sensor ground circuit terminal connection at the PCM. 2. If a problem is found, repair as necessary. Was a problem found?	—	Verify repair	Go to *Step 9*
9	1. Check for an intermittent open or a faulty splice in the sensor ground circuit. 2. If a problem is found, repair as necessary. Was a problem found?	—	Verify repair	Refer to *Diagnostic Aids*

Downloaded from www.Manualslib.com manuals search engine

Diagnostic Trouble Code(DTC)
P1120-TPS 1 Throttle Position Sensor (TPS1) Circuit Fault

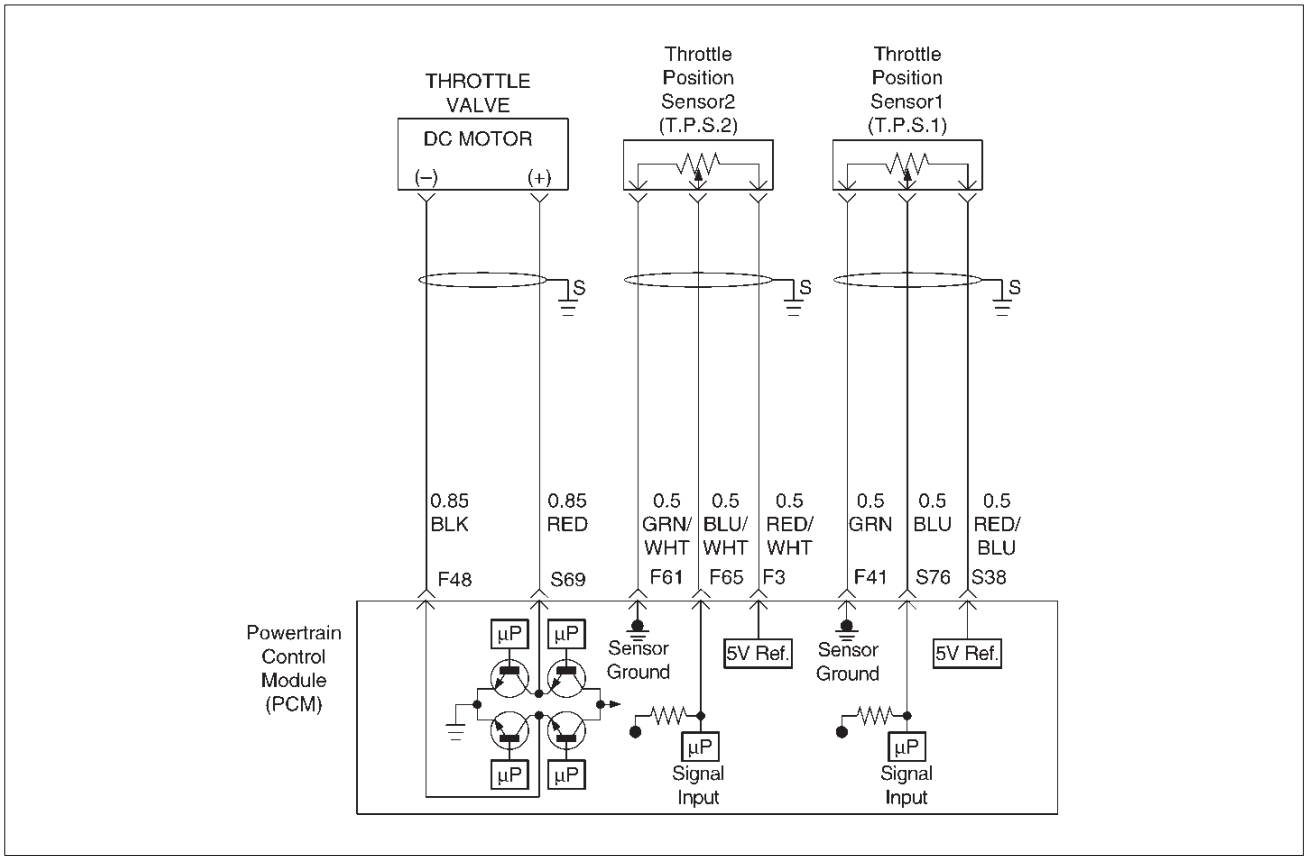

Circuit Description

- The throttle position (TP) sensor circuit provides a voltage signal relative to throttle blade angle.

  The throttle blade angle will vary about 8 % at closed throttle to about 92 % at wide open throttle(WOT).

  This code detects a continuous short to ground or high in either the cicuit or the sensor.

Conditions for setting the DTC

- The Ignition is “ON”.
- The throttle blade angle is less than 2.5 % or more tnan 97.5 % for 18 failres within 500 test samples (15.6m sec)

Action Taken When the DTC Sets

- The PCM will store condition which were present when the DTC was set as Freeze Frame and in the Failure Records data.

Conditions for Clearing the MIL/DTC

- The PCM will turn the MIL “OFF” on the third consecutive trip cycle during which the diagnostic has been run and the fault condition is no longer present.
- A histror DTC P1120 will clear after 40 cosecutive trip cycle during which the warm up cycles have occurred without a fault.
- DTC P1120 can be cleared using the Tech 2 “Clear Info” function or by disconnecting the PCM battery feed.

Diagnostic Aids

An intermittent may be caused by the following:

- Poor connectons.
- Mis routed harness.
- Rubbed through wire insulation.
- Broken wire inside the insulation.

Check for the following conditions:

- Poor connection at PCM-Inspect harness connectors for backed out terminals, improper mating, broken locks, improperly formed or damaged terminals,and poor terminal to wire connection.
- Damaged harness-Inspect the wiring harness for damage. If the harness appears to be OK,observe the TPS 1 display on the Tech 2 while moving connectors and wiring harnesses related to the sensor.

  A change in the display will indicate the location of the fault.

  If DTC P1120 cannot be duplicated,the information included in the Faillure Records data can be useful in determined vehicle mileage since the DTC was last set.

  If it is determined that the DTC occurs intermittently, performing the DTC P1120 Diagnostic Chart may isolate the cause of the fault.

Downloaded from www.Manualslib.com manuals search engine

Diagnostic Trouble Code(DTC)P1120-TPS 1 Circuit Fault

Step	Action	Value(s)	Yes	No
1	Was the “On-Board(OBD)System Check” performed?	—	Go to *Step 2*	Go to *OBD System Check*
2	1. Ignition “ON”, engine not running. 2. Observe the MAP reading on the Tech 2. Is the MAP reading less than the specified value?	65kPa	Go to *Step 3*	Go to *Step 6*
3	1. Disconnect the MAP sensor. 2. Connect a test 5 volt reference circuit and the MAP signal at the MAP sensor harness connector. 3. Observe the MAP reading on the Tech 2. Is the MAP reading less than the specified value? (If no, start with diagnosis chart forother sensors in the circuit and see if 5V returns.)	—	Go to *Step 5*	Go to *Step 4*
4	1. Check the MAP signal circuit between the PCM and MAP grund circuit. 2. If the MAP signal circuit is open or shoted, repair it as necessary. Was the MAP signal circuit open or shorted?	—	Verify repair	Go to *Step 12*
5	Replace the MAP sensor. Is the action complete?	—	Verify repair	—
6	Observe the TP angle reading on the Tech 2 while slowly opening the throttle. Does the TP angle increase steadily and evenly from the closed throttle value to the wide open throttle value?	Closed throttle =8 % Wide open throttle =92 %	Refer to *Diagnostic Aids*	Go to *Step 7*
7	1. Disconnect the TP sensor. 2. Observe the TP sensor reading on the Tech 2. Is the TP sensor reading near the specified value?	0V	Go to *Step 8*	Go to *Step 9*
8	1. Connect a test light between the 5Volt reference circuit and the TP1 sensor signal circuit at the TP1 sensor harness connector. 2. Observe the TP1 sensor reading on the Tech 2. Is the TP sensor reading near the specified value?	5V	Go to *Step 11*	Go to *Step 10*
9	Check the following items; 1. TP1 signal circuit for a short to voltage. 2. TP1 sensor ground circuit for high resistance between the PCM and the TP sensor. 3. TP1 sensor ground circuit for a poor connection. 4. If a problem is found,repair wiring harness as necessary. Was a problem found?	—	Verify repair	Go to *Step 12*

Downloaded from www.Manualslib.com manuals search engine

Diagnostic Trouble Code(DTC)P1120-TPS 1 Circuit Fault (Cont'd)

Step	Action	Value(s)	Yes	No
10	Check the following items; 1. TP signal circuit or 5 volt reference circuit for a poor connection. 2. TP signal circuit or 5 volt reference circuit for high resistance between the PCM and the TP sensor. 3. If a problem is found, repair wiring harness as necessary. Was a problem found?	—	Verify repair	Go to *Step 12*
11	Replace the TP sensor. Is the action complete?	—	Verify repair	—
12	Replace the PCM. **IMPORTANT:** The replacement PCM must be programmed. Refer to *ON-Vehicle Service in Power Control Module and Sensors for procedures.* And also refer to latest Service Bulletin. Check to see if the latest software is released or not. And then Down Load the LATEST PROGRMMED SOFTWARE to the replasement PCM. Is the action complete?	—	Verify repair	—

Downloaded from www.Manualslib.com manuals search engine

Diagnostic Trouble Code (DTC)
P1125 ETC (Electric Throttle Control) Limit Performance Mode

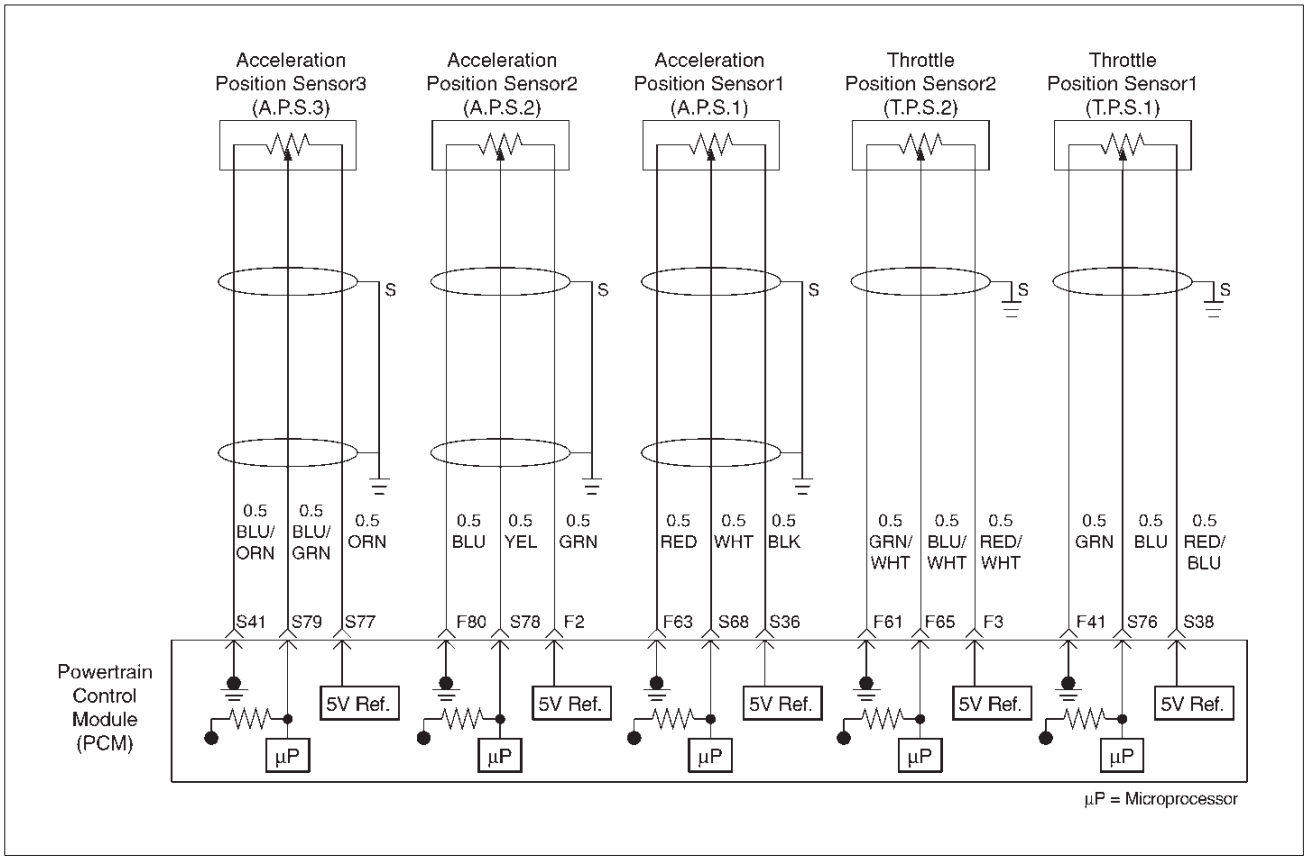

D06RY00157

Circuit Description

- The acceleration position (AP1) sensor circuit provides a voltage signal relative to acceleration pedal angle.

  The acceleration pedal angle will vary about 13 % at idle position to about 87 % at wide open throttle (WOT).

  This code detects if the systm is in Limit Performance Mode. (Fail safe Mode)

Conditions for setting the DTC

- The Ignition is " ON".
- Limit Performance Mode is active. (Fail safe Mode)

Action Taken When the DTC Sets

- The PCM will store condition which were present when the DTC was set as Freeze Frame and in the Failure Records data.

Conditions for Clearing the MIL/DTC

- The PCM will turn the MIL "OFF" on the third consecutive trip cycle during which the diagnostic has been run and the fault condtion is no longer present.
- A history DTC P1125 will clear after 40 cosecutive trip cycle during which the warm up cycles have occurred without a fault.
- DTC P1125 can be cleared using the Tech 2 "Clear Info" function or by disconnecting the PCM battery feed.

Diagnostic Aids

An intermittent may be caused by the following:

- Poor connectons.
- Mis routed harness.
- Rubbed through wire insulation.
- Broken wire inside the insulation.

Check for the following conditions:

- Poor connection at PCM-Inspect harness connectors for backed out terminals, improper mating, broken locks, improperly formed or damaged terminals,and poor terminal to wire connection.
- Damaged harness-Inspect the wiring harness for damage. If the harness appears to be OK, observe the APP sensor 1, APP sensor 2, APP sensor 3 display on the Tech 2 While moving connectors and wiring harnesses related to the sensor.

  A change in the display will indicate the location of the fault.

  If DTC P1125 cannot be duplicated,the information includedin the Faillure Records data can be useful in determined vehicle mileage since the DTC was last set.

  If it is determined that the DTC occurs intermittently,performing the DTC P1125 Diagnostic Chart may isolate the cause of the fault.

Downloaded from www.Manualslib.com manuals search engine

DTC P1125 – ETC Limit Performance Model

Step	Action	Value(s)	Yes	No
1	Was the “On-Board (OBD) System Check” performed?	—	Go to *Step 2*	Go to *OBD System Check*
2	Was the “Electric Throttle Control (ETC) System Chcek” performed?	—	Go to *Step 3*	Go to *ETC System Check*
3	Observe the AP angle reading on the Tech 2 while slowly opening the throttle. Does the AP angle increase steadily and evenly from the closed throttle value to the wide open throttle value?	Idle position APP sensor 1 =13 % APP sensor 2, 3 =85 ~ 89 % open throttle APP sensor 1 =85 ~ 89 % APP sensor 2 =11 ~ 15 %	Refer to *Diagnostic Aids*	Go to *Step 4*
4	1. Disconnect the AP sensor. 2. Observe the AP sensor reading on the Tech 2. Is the AP sensor reading near the specified value?	0V	Go to *Step 5*	Go to *Step 6*
5	1. Connect a test light between the 5 Voltge supply circuit and the AP1, AP2 AND AP3 sensor signal circuit at the AP sensor harness connector. 2. Observe the AP sensor reading on the Tech 2. Is the AP sensor reading near the specified value?	5V	Go to *Step 7*	Go to *Step 8*
6	Check the following items; 1. AP1, AP2 or AP3 signal circuit for a short to voltage. 2. AP1, AP2 or AP3 sensor ground circuit for high resistance between the PCM and the AP sensor. 3. AP1, AP2 or AP3 sensor ground circuit for a poor connection. 4. If a problem is found, repair wiring harness as necessary. Was a problem found?	—	Verify repair	Go to *Step 9*
7	Check the following items; 1. AP1, AP2 or AP3 signal circuit or 5 volge supply circuit for a poor connection. 2. AP1, AP2 or AP3 signal circuit or 5 volge supply circuit for high resistance between the PCM and the AP1, AP2 or AP3 sensor. 3. If a problem is found, repair wiring harness as necessary. Was a problem found?	—	Verify repair	Go to *Step 9*

Downloaded from www.Manualslib.com manuals search engine

DTC P1125 – ETC Limit Performance Model (Cont'd)

Step	Action	Value(s)	Yes	No
8	Replace the AP sensor. Is the action complete?	—	Verify repair	—
9	Replace the PCM. **IMPORTANT:** The replacement PCM must be programmed.Refer to *ON-Vehicle Service in Power Control Module and Sensors for procedures.* And also refer to latest Service Bulletin. Check to see if the latest software is released or not. And then Down Load the LATEST PROGRAMMED SOFTWARE to the replasement PCM. Is the action complete?	—	Verify repair	—

Downloaded from www.Manualslib.com manuals search engine

Diagnostic Trouble Code (DTC) P1133 HO2S Insufficient Switching Bank 1 Sensor 1

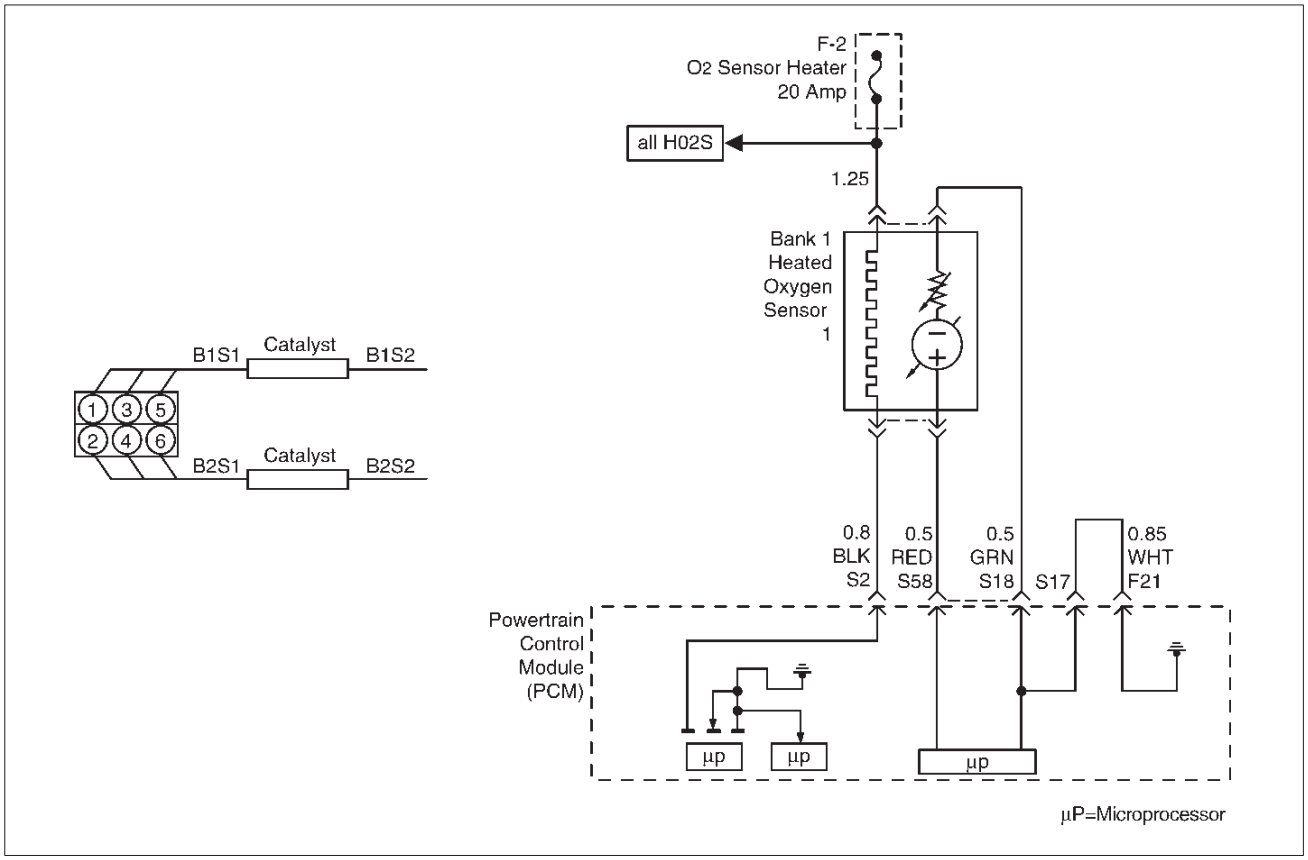

D06RY00171

Circuit Description

The powertrain control module (PCM) monitors the heated oxygen sensor (HO2S) activity for 90 seconds after "closed loop" and stoichiometric operation have been enabled. During this test period the PCM counts the number of times that the HO2S signal voltage crosses the rich-to-lean and lean-to-rich threshold. If the PCM determines that the HO2S did not switch enough times, DTC P1133 will be set.

A lean-to-rich switch is determined when the HO2S voltage changes above and below 450 mV.

Heated oxygen sensors are used to minimize the amount of time required for "closed loop" fuel control operation and to allow accurate catalyst monitoring. The oxygen sensor heater greatly decreases the amount of time required for fuel control sensors Bank 1 HO2S 1 and Bank 2 HO2S 1 to become active. Oxygen sensor heaters are required by post-catalyst monitor sensors to maintain a sufficiently high temperature for accurate exhaust oxygen content readings further from the engine.

Conditions for Setting the DTC

- Engine coolant temperature (ECT) is above 50˚C (122˚F) for automatic transmission; 75˚C (167˚F) for manual transmission.
- Engine is operating in "closed loop".
- The engine has been running at least one minute.
- Canister purge duty cycle is greater than 2%.
- Engine speed is between 1500 RPM and 3000 RPM.
- Mass air flow (MAF) is between 9 g/second and 42 g/second.
- Above conditions are present for 3 seconds.
- 90 seconds after "closed loop" and stoichiometric operation have been achieved, the PCM monitors the oxygen sensor as it switches above and below 450 mV. If fewer than 23 rich-to-lean and lean-to-rich switches are detected, DTC P1133 will be set.

Action Taken When the DTC Sets

- The PCM will illuminate the malfunction indicator lamp (MIL) after the second consecutive trip in which the fault is detected.
- "Open loop" fuel control will be in effect.
- The PCM will store conditions which were present when the DTC was set as Freeze Frame and in the Failure Records data.

Conditions for Clearing the MIL/DTC

- The PCM will turn the MIL "OFF" on the third consecutive trip cycle during which the diagnostic has been run and the fault condition is no longer present.
- A history DTC P1133 will clear after 40 consecutive warm-up cycles have occurred without a fault.
- DTC P1133 can be cleared by using Tech 2 "Clear Info" function or by disconnecting the PCM battery feed.

Downloaded from www.Manualslib.com manuals search engine

Diagnostic Aids

A malfunction in the HO2S heater ignition feed or ground circuit may cause a DTC P1133 to set. Check HO2S heater circuitry for intermittent faults or poor connections. If connections and wiring are OK and DTC P1133 continues to set, replace the Bank 1 HO2S 1.
Reviewing the Failure Records vehicle mileage since the diagnostic test last failed may help to determine how often the condition that caused the DTC to be set occurs. This may assist in diagnosing the condition.

Test Description

Number(s) below refer to the step number(s) on the Diagnostic Chart.

3. A condition that affects other heated oxygen sensors indicates probable contamination. To avoid damaging the replacement sensors, correct the condition which caused the contamination before replacing the affected sensors.

5. This step checks for conditions which may cause the heated oxygen sensor to appear faulty. Correct any of the described conditions if present.

11. To avoid damaging replacement sensors, correct the condition which caused the contamination before replacing the affected sensors.

DTC P1133 – HO2S Insufficient Switching Bank 1 Sensor 1

Step	Action	Value(s)	Yes	No
1	Was the “On-Board Diagnostic (OBD) System Check” performed?	—	Go to *Step 2*	Go to *OBD System Check*
2	**IMPORTANT:** If any DTCs are set (except P1153 or P1154) refer to those DTCs before proceeding with this diagnostic chart. 1. Engine idling at operating temperature. 2. Operating the vehicle within parameters specified under “Conditions for Setting the DTC” criteria included in Diagnostic Support. 3. Using a Tech 2, monitor “DTC” info for DTC P1133 until the DTC P1133 test runs. 4. Note the test result. Does the Tech 2 indicate DTC P1133 failed this ignition?	—	Go to *Step 3*	Refer to *Diagnostic Aids*
3	Did the Tech 2 also indicate that the P1153 or P1154 tests failed?	—	Go to *Step 20*	Go to *Step 4*
4	Check for leaks at the exhaust pipe joints. Are the joints leaking?	—	Go to *Step 5*	Go to *Step 6*
5	Tighten the bolt/nuts at the leaking joints. Is your action complete?	—	Go to *Step 2*	—
6	Check for gaskets that are damaged or improperly installed. Are there damaged or misaligned gaskets?	—	Go to *Step 7*	Go to *Step 8*
7	1. Replace the damaged gaskets. 2. Align the connections. 3. Tighten the connections. Is your action complete?	—	Go to *Step 2*	—
8	Check for loose exhaust flange connections. Are the flange connections loose?	—	Go to *Step 9*	Go to *Step 10*
9	Tighten the stud nuts or bolts to specifications. Is your action complete?	—	Go to *Step 2*	—
10	Check for burned or corroded exhaust pipes. Are the exhaust pipes burned or corroded?	—	Go to *Step 11*	Go to *Step 12*

Downloaded from www.Manualslib.com manuals search engine

DTC P1133 – HO2S Insufficient Switching Bank 1 Sensor 1 (Cont'd)

Step	Action	Value(s)	Yes	No
11	Replace the exhaust pipes, as required. Is your action complete?	—	Go to *Step 2*	—
12	Check for leaks at the exhaust manifold. Are there leaks at the exhaust manifold?	—	Go to *Step 13*	Go to *Step 14*
13	Tighten the bolts to specifications or replace the manifold if necessary. Is your action complete?	—	Go to *Step 2*	—
14	Visually/physically inspect the following items: ● Ensure that the Bank 1 HO2S 1 is securely installed. ● Check for corrosion on the terminals. ● Check the terminals at Bank 1 HO2S 1 and at the PCM. ● Check for damaged wiring. Was a problem found in any of the above areas?	—	Verify repair	Go to *Step 15*
15	1. Disconnect Bank 1 HO2S 1. 2. Ignition "ON." 3. Using a DVM at the PCM side of the connector, check the voltage between the high signal circuit and ground. Also measure between the low signal circuit and ground. Are both voltages in the specified range?	3-4 mV	Go to *Step 18*	Go to *Step 16*
16	1. Ignition "OFF." 2. Check for damage to PCM pins or terminals. Was a problem found.	—	Verify repair	Go to *Step 17*
17	Check for a short to voltage or ground or an open in the signal circuit. Was a problem found?	—	Verify repair	Go to *Step 18*
18	1. Ignition "OFF." 2. Disconnect the PCM connector. 3. With the HO2S disconnected, check for high and low signal circuits shorted together between the PCM and HO2S. Was a problem found?	—	Verify repair	Go to *Step 19*
19	With the PCM connected and Bank 1 HO2S 1 disconnected from the harness, check Bank 1 HO2S 1 with a Tech 2. Is the voltage in the specified range?	425-475 mV	Go to *Step 21*	Go to *Step 22*
20	Replace the affected heated oxygen sensors. NOTE: Before replacing the sensors, the cause of the contamination must be determined and corrected. ● Fuel contamination ● Use of improper RTV sealant. ● Engine oil/coolant consumption. Is the action complete?	—	Verify repair	—

Downloaded from www.Manualslib.com manuals search engine

DTC P1133 – HO2S Insufficient Switching Bank 1 Sensor 1 (Cont'd)

Step	Action	Value(s)	Yes	No
21	Replace Bank 1 HO2S 1. Is the action complete?	—	Verify repair	—
22	Replace the PCM. **IMPORTANT:** The replacement PCM must be programmed. Refer to *On-Vehicle Service* in *Powertrain Control Module and Sensors* for procedures. And also refer to latest Service Bulletin. Check to see if the Latest software is released or not. And then Down Load the LATEST PROGRAMMED SOFTWARE to the replacement PCM. Is the action compete?	—	Verify repair	—

Downloaded from www.Manualslib.com manuals search engine

Diagnostic Trouble Code (DTC) P1134 HO2S Transition Time Ratio Bank 1 Sensor 1

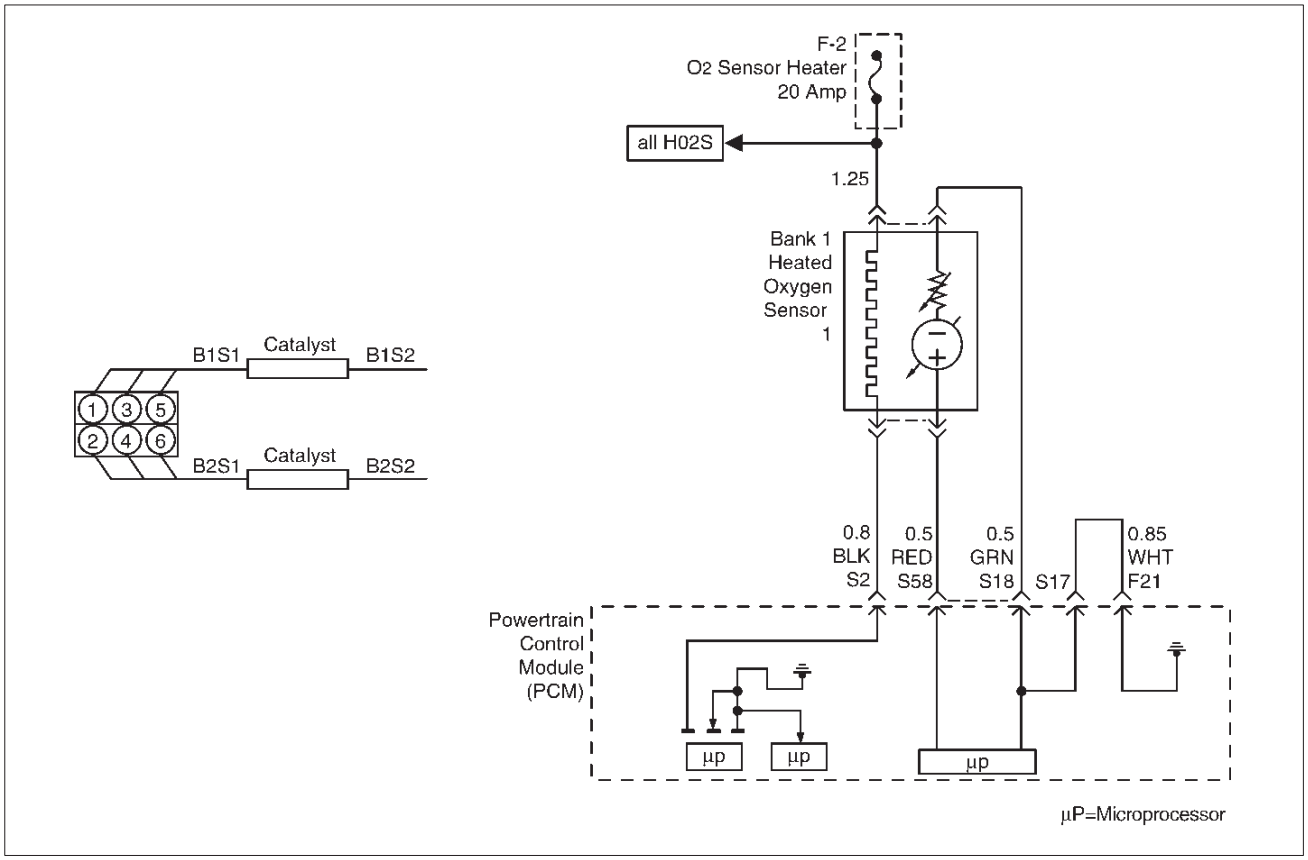

D06RY00171

Circuit Description

The powertrain control module (PCM) monitors the heated oxygen sensor (HO2S) activity for 90 seconds after "closed loop" and stoichiometric operation have been established. During the monitoring period the PCM counts the number of times that the HO2S responds from rich-to-lean and from lean-to-rich and adds the amount of time it took to complete all transitions. With this information, an average time for all transitions can be determined. The PCM then divides the rich-to-lean average by the lean-to-rich average to obtain a ratio. If the HO2S transition time ratio is not within this range, DTC P1134 will be set, indicating that the oxygen sensor is not responding as expected to changes in exhaust oxygen content.

Conditions for Setting the DTC

- No related DTCs.
- Engine coolant temperature (ECT) is above 50˚C (122˚F) for automatic transmission; 75˚C (167˚F) for manual transmission.
- Engine is operating in "closed loop."
- The engine has been running at least one minute.
- Canister purge duty cycle is greater than 2%.
- Engine speed is between 1500 RPM and 3000 RPM.
- Mass air flow (MAF) is between 9 g/second and 42 g/second.
- Above conditions are present for a 3-second monitoring period.
- 90 seconds after "closed loop" and stoichiometric operation have been enabled, Bank 1 HO2S 1 transition ratio between lean-to-rich and rich-to-lean is less than 0.44 or greater than 3.8.

Action Taken When the DTC Sets

- The PCM will illuminate the malfunction indicator lamp (MIL) after second consecutive trip in which the fault is detected.
- "Open loop" fuel control will be in effect.
- The PCM will store conditions which were present when the DTC was set as Freeze Frame and in the Failure Records data.

Conditions for Clearing the MIL/DTC

- The PCM will turn the MIL "OFF" on the third consecutive trip cycle during which the diagnostic has been run and the fault condition is no longer present.
- A history DTC P1134 will clear after 40 consecutive warm-up cycles have occurred without a fault.
- DTC P1134 can be cleared by using the Tech 2 "Clear Info" function or by disconnecting the PCM battery feed.

Diagnostic Aids

A malfunction in the HO2S heater ignition feed or ground circuit may cause a DTC P1134 to set. Check HO2S

Downloaded from www.Manualslib.com manuals search engine

heater circuitry for intermittent faults or poor connections. If connections and wiring are OK and DTC P1134 continues to set, replace the Bank 1 HO2S 1.
Reviewing the Failure Records vehicle mileage since the diagnostic test last failed may help determine how often the condition that caused the DTC to be set occurs. This may assist in diagnosing the condition.

Test Description

Number(s) below refer to the step number(s) on the Diagnostic Chart.

3. A condition that affects other heated oxygen sensors indicates probable contamination. To avoid damaging replacement sensors, correct the condition which caused the contamination before replacing the affected sensors.
5. This step checks for conditions which may cause the heated oxygen sensor to appear faulty. Correct any of the described conditions if present.
8. To avoid damaging replacement sensors, correct the condition which caused the contamination before replacing the affected sensors.

DTC P1134 – HO2S Transition Time Ratio Bank 1 Sensor 1

Step	Action	Value(s)	Yes	No
1	Was the “On-Board Diagnostic (OBD) System Check” performed?	—	Go to *Step 2*	Go to *OBD System Check*
2	**IMPORTANT:** If any DTCs are set (except P1153 and/or P1154), refer to those DTCs before proceeding with this diagnostic chart. 1. Idle the engine at operating temperature. 2. Operate the vehicle within parameters specified under “Conditions for Setting the DTC” criteria included in Diagnostic Support. 3. Using a Tech 2, monitor “DTC” info for DTC P1134 until the DTC P1134 test runs. 4. Note the test result. Does Tech 2 indicate DTC 1134 failed this ignition?	—	Go to *Step 3*	Refer to *Diagnostic Aids*
3	Did the Tech 2 also indicate P1153, and/or P1154 test failed?	—	Go to *Step 17*	Go to *Step 4*
4	Check for leaks at the exhaust pipe joints. Are the joints leaking?	—	Go to *Step 5*	Go to *Step 6*
5	Tighten the U-bolt nuts at the leaking joints. Is your action complete?	—	Go to *Step 2*	—
6	Check for gaskets that are damaged or improperly installed. Are there damaged or misaligned gaskets?	—	Go to *Step 7*	Go to *Step 8*
7	1. Replace the damaged gaskets. 2. Align the connections. 3. Tighten the connections. Is your action complete?	—	Go to *Step 2*	—
8	Check for loose exhaust flange connections. Are the flange connections loose?	—	Go to *Step 9*	Go to *Step 10*
9	Tighten the stud nuts or bolts to specifications. Is your action complete?	—	Go to *Step 2*	—
10	Check for burned or corroded exhaust pipes. Are the exhaust pipes burned or corroded?	—	Go to *Step 11*	Go to *Step 12*
11	Replace the exhaust pipes, as required. Is your action complete?	—	Go to *Step 2*	—

Downloaded from www.Manualslib.com manuals search engine

DTC P1134 – HO2S Transition Time Ratio Bank 1 Sensor 1 (Cont'd)

Step	Action	Value(s)	Yes	No
12	Check for leaks at the exhaust manifold. Are there leaks at the exhaust manifold?	—	Go to *Step 13*	Go to *Step 14*
13	Tighten the bolts to specifications or replace the manifold if necessary. Is your action complete?	—	Go to *Step 2*	—
14	Visually/physically inspect the following items: ● Ensure that the Bank 1 HO2S 1 is securely installed. ● Check for corrosion on terminals. ● Check the terminal tension (at Bank 1 HO2S 1 and at the PCM). ● Check for damaged wiring. Was a problem found in any of the above areas?	—	Go to *Step 18*	Go to *Step 15*
15	1. Disconnect Bank 1 HO2S 1. 2. Ignition "ON." 3. Using a DVM at the PCM side of the HO2S 1 connector, measure the voltage between the high signal circuit and ground. 4. Also measure the voltage between the low signal circuit and ground. Are both voltages in the specified range?	3-4V	Go to *Step 16*	Go to *Step 19*
16	1. With Bank 1 HO2S 1 disconnected, jumper the high and low (PCM side) signal circuits to ground. 2. Ignition "ON." 3. Using a Tech 2, monitor the Bank 1 HO2S 1 voltage. Does the Tech 2 indicate less than 10 mV and immediately return to about 450 mV when the jumper is removed?	—	Go to *Step 21*	Go to *Step 22*
17	Replace affected heated oxygen sensors. NOTE: Before replacing sensors, the cause of the contamination must be determined and corrected. ● Fuel contamination. ● Use of improper RTV sealant. ● Engine oil/coolant consumption. Is the action complete?	—	Verify repair	—
18	Repair condition as necessary. Is the action complete?	—	Verify repair	—
19	Check for faulty PCM connections or terminal damage. Is the action complete?	—	Verify repair	Go to *Step 20*
20	Repair open, short or grounded signal circuit. Is the action complete?	—	Verify repair	Go to *Step 7*

Downloaded from www.Manualslib.com manuals search engine

DTC P1134 – HO2S Transition Time Ratio Bank 1 Sensor 1 (Cont'd)

Step	Action	Value(s)	Yes	No
21	Replace Bank 1 HO2S 1. Is the action complete?	—	Verify repair	—
22	Replace the PCM. **IMPORTANT:** The replacement PCM must be programmed. Refer to *On-Vehicle Service* in *Powertrain Control Module and Sensors* for procedures. And also refer to latest Service Bulletin. Check to see if the Latest software is released or not. And then Down Load the LATEST PROGRAMMED SOFTWARE to the replacement PCM. Is the action complete?	—	Verify repair	—

Downloaded from www.Manualslib.com manuals search engine

Diagnostic Trouble Code (DTC)
P1153 HO2S Insufficient Switching Bank 2 Sensor 1

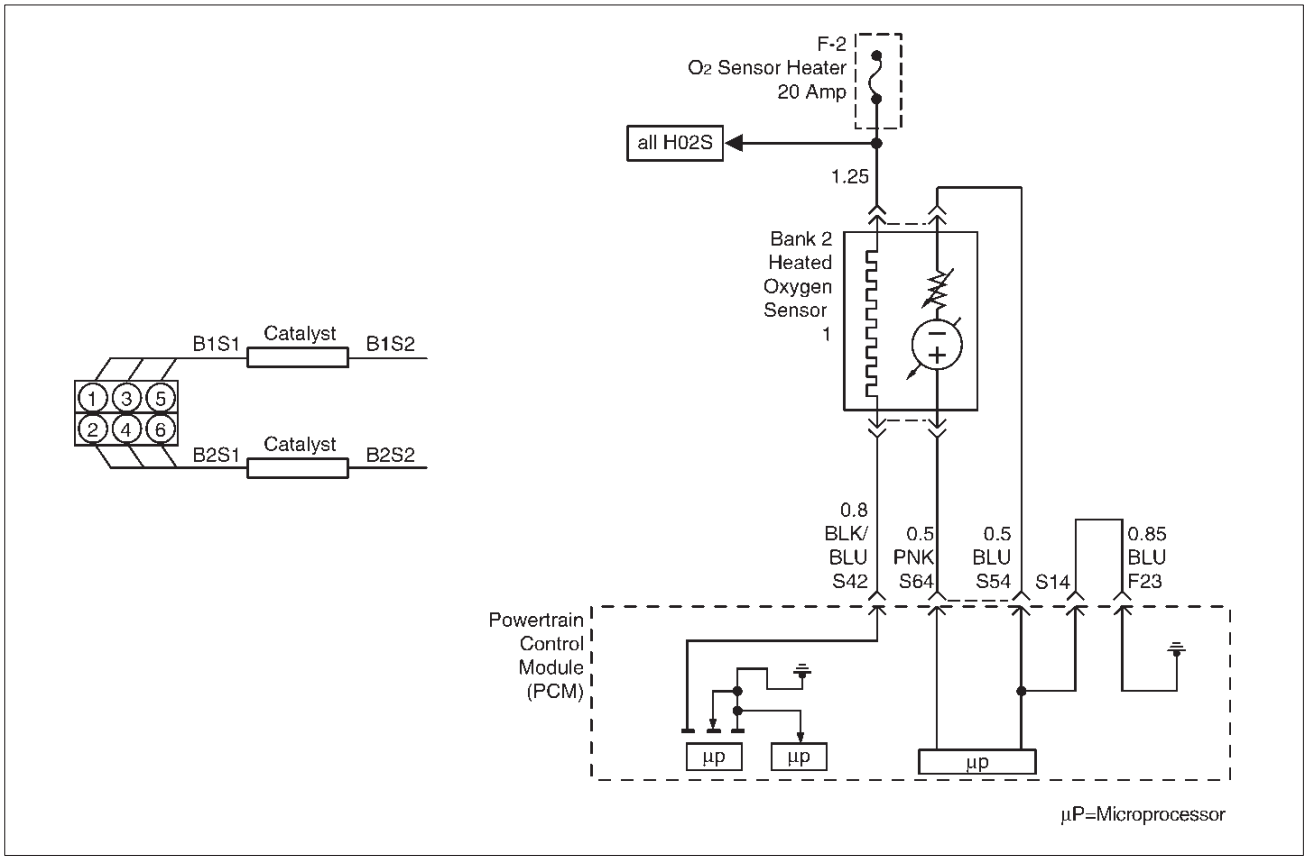

D06RY00175

Circuit Description

The powertrain control module (PCM) monitors the heated oxygen sensor (HO2S) activity for 90 seconds after "closed loop" and stoichiometric operation have been enabled. During this test period the PCM counts the number of times that the HO2S signal voltage crosses the rich-to-lean and lean-to-rich thresholds. If the PCM determines that the HO2S did not switch enough times, DTC P1153 will be set.

A lean-to-rich switch is determined when the HO2S voltage changes above and below 450 mV.

Heated oxygen sensors are used to minimize the amount of time required for "closed loop" fuel control operation and to allow accurate catalyst monitoring. The oxygen sensor heater greatly decreases the amount of time required for fuel control sensors Bank 1 HO2S 1 and Bank 2 HO2S 1 to become active. Oxygen sensor heaters are required by post-catalyst monitor sensors to maintain a sufficiently high temperature for accurate exhaust oxygen content readings further from the engine.

Conditions for Setting the DTC

- The engine is operating in "closed loop."
- Engine coolant temperature (ECT) is above 50˚C (122˚F) for automatic transmission; 75˚C (167˚F) for manual transmission.
- The engine has been running at least one minute.
- Canister purge duty cycle is greater than 2%.
- Engine speed is between 1500 RPM and 3000 RPM.
- Mass air flow is between 9 g/second and 42 g/second.
- Above conditions are present for a 3 seconds.
- 90 seconds after "closed loop" and stoichiometric operation have been enabled, the PCM monitors the oxygen sensor switching above and below 450 mV. If fewer than 27 rich-to-lean and lean-to-rich switches for Bank 2 HO2S 1 are detected, DTC P1153 will set.

Action Taken When the DTC Sets

- The PCM will illuminate the malfunction indicator lamp (MIL) after the second consecutive trip in which the fault is detected.
- "Open loop" fuel control will be in effect.
- The PCM will store conditions which were present when the DTC was set as Freeze Frame and in the Failure Records data.

Conditions for Clearing the MIL/DTC

- The PCM will turn the MIL "OFF" on the third consecutive trip cycle during which the diagnostic has been run and the fault condition is no longer present.
- A history DTC P1153 will clear after 40 consecutive warm-up cycles have occurred without a fault.
- DTC P1153 can be cleared by using the Tech 2 "Clear Info" function or by disconnecting the PCM battery feed.

Downloaded from www.Manualslib.com manuals search engine

Diagnostic Aids

A malfunction in the HO2S heater ignition feed or ground circuit may cause a DTC P1153 to set. Check HO2S heater circuitry for intermittent faults or poor connections. If connections and wiring are OK and DTC P1153 continues to set, replace the Bank 2 HO2S 1.
Reviewing the Failure Records vehicle mileage since the diagnostic test last failed may help determine how often the condition that caused the DTC to be set occurs. This may assist in diagnosing the condition.

Test Description

Number(s) below refer to the step number(s) on the Diagnostic Chart.

3. A condition that affects other heated oxygen sensors indicates probable contamination. To avoid damaging replacement sensors, correct the condition which caused the contamination before replacing the affected sensors.
5. This step checks for conditions which may cause the heated oxygen sensor to appear faulty. Correct any of the described conditions if present.
8. To avoid damaging replacement sensors, correct the condition which caused the contamination before replacing the affected sensors.

DTC P1153 – HO2S Insufficient Switching Bank 2 Sensor 1

Step	Action	Value(s)	Yes	No
1	Was the “On-Board Diagnostic (OBD) System Check” performed?	—	Go to *Step 2*	Go to *OBD System Check*
2	**IMPORTANT:** If any DTCs are set, (except P1133 and/or P1134), refer to those DTCs before proceeding with this diagnostic chart. 1. Idle the engine at operating temperature. 2. Operate the vehicle within parameters specified under “Conditions for Setting the DTC” criteria included in Diagnostic Support. 3. Using a Tech 2, monitor “DTC” info for DTC P1153 until the DTC P1153 test runs. Note the test result. Does Tech 2 indicate DTC failed this ignition?	—	Go to *Step 3*	Refer to *Diagnostic Aids*
3	Did the Tech 2 also indicate P1133 and/or P1134 test failed?	—	Go to *Step 20*	Go to *Step 4*
4	Check for leaks at the exhaust pipe joints. Are the joints leaking?	—	Go to *Step 5*	Go to *Step 6*
5	Tighten the U-bolt nuts at the leaking joints. Is your action complete?	—	Go to *Step 2*	—
6	Check for gaskets that are damaged or improperly installed. Are there damaged or misaligned gaskets?	—	Go to *Step 7*	Go to *Step 8*
7	1. Replace the damaged gaskets. 2. Align the connections. 3. Tighten the connections. Is your action complete?	—	Go to *Step 2*	—
8	Check for loose exhaust flange connections. Are the flange connections loose?	—	Go to *Step 9*	Go to *Step 10*
9	Tighten the stud nuts or bolts to specifications. Is your action complete?	—	Go to *Step 2*	—
10	Check for burned or corroded exhaust pipes. Are the exhaust pipes burned or corroded?	—	Go to *Step 11*	Go to *Step 12*

Downloaded from www.Manualslib.com manuals search engine

DTC P1153 – HO2S Insufficient Switching Bank 2 Sensor 1 (Cont'd)

Step	Action	Value(s)	Yes	No
11	Replace the exhaust pipes, as required. Is your action complete?	—	Go to *Step 2*	—
12	Check for leaks at the exhaust manifold. Are there leaks at the exhaust manifold?	—	Go to *Step 13*	Go to *Step 14*
13	Tighten the bolts to specifications or replace the manifold if necessary. Is your action complete?	—	Go to *Step 2*	—
14	Visually/physically inspect the following items: ● Ensure that the Bank 2 HO2S 1 is securely installed. ● Check for corrosion on terminals. ● Check the terminal tension at Bank 2 HO2S 1 and at the PCM. ● Check for damaged wiring. Was a problem found in any of the above areas?	—	Verify repair	Go to *Step 15*
15	1. Disconnect Bank 2 HO2S 1. 2. Ignition "ON." 3. Using a DVM at the PCM side of the connector, check the voltage between the high signal circuit and ground. Also measure between the low signal circuit and ground. Are both voltages in the specified range?	3-4V	Go to *Step 18*	Go to *Step 16*
16	1. Ignition "ON." 2. Check for damage to PCM pins or terminals. Was a problem found?	—	Verify repair	Go to *Step 17*
17	Check for short to voltage or ground or an open in the signal circuit. Was a problem found?	—	Verify repair	Go to *Step 18*
18	1. Ignition "OFF." 2. Disconnect the PCM connector. 3. With HO2S disconnected, check for high and low signal circuits shorted together between the PCM and HO2S. Was a problem found?	—	Verify repair	Go to *Step 19*
19	With the PCM connected and Bank 2 HO2S 1 disconnected from the harness, check Bank 2 HO2S 1 with a Tech 2. Is the voltage in the specified range?	425-475 mV	Go to *Step 21*	Go to *Step 22*
20	Replace affected heated oxygen sensors. NOTE: Before replacing sensors, the cause of the contamination must be determined and corrected. ● Fuel contamination. ● Use of improper RTV sealant. ● Engine oil/coolant consumption. Is the action complete?	—	Verify repair	—

Downloaded from www.Manualslib.com manuals search engine

DTC P1153 – HO2S Insufficient Switching Bank 2 Sensor 1 (Cont'd)

Step	Action	Value(s)	Yes	No
21	Replace Bank 2 HO2S 1. Is the action complete?	—	Verify repair	—
22	Replace the PCM. **IMPORTANT:** The replacement PCM must be programmed. Refer to *On-Vehicle Service* in *Powertrain Control Module and Sensors* for procedures. And also refer to latest Service Bulletin. Check to see if the Latest software is released or not. And then Down Load the LATEST PROGRAMMED SOFTWARE to the replacement PCM. Is the action complete?	—	Verify repair	—

Downloaded from www.Manualslib.com manuals search engine

Diagnostic Trouble Code (DTC)
P1154 HO2S Circuit Transition Time Ratio Bank 2 Sensor 1

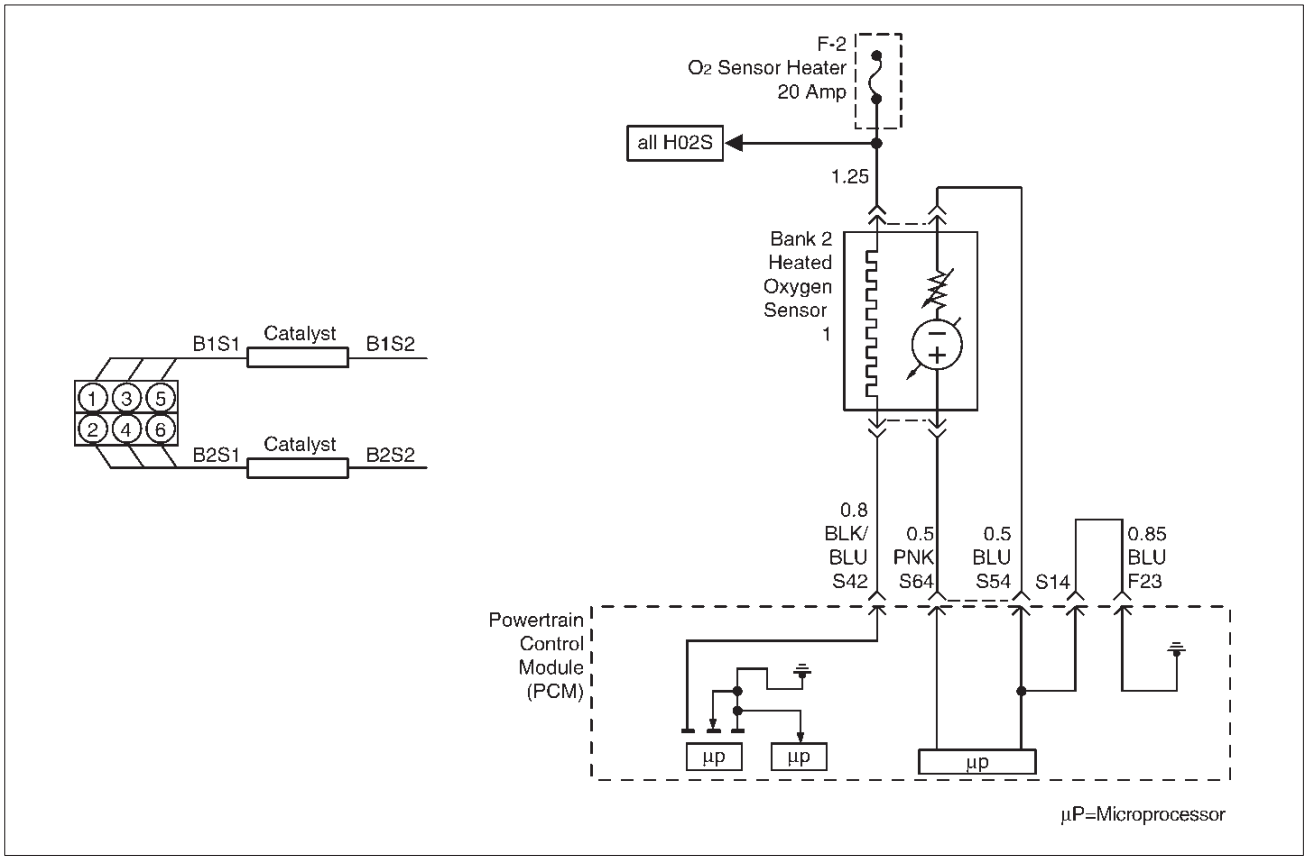

D06RY00175

Circuit Description

The powertrain control module (PCM) monitors the heated oxygen sensor (HO2S) activity for 90 seconds after "closed loop" and stoichiometric operation have been enabled. During the monitor period the PCM counts the number of times that the HO2S responds from rich-to-lean and from lean-to-rich and adds the amount of time it took to complete all transitions. With this information, an average time for all transitions can be determined. The PCM then divides the rich-to-lean average by the lean-to-rich average to obtain a ratio. If the HO2S transition time ratio is not within this range, DTC P1154 will be set, indicating that the oxygen sensor is not responding as expected to changes in exhaust oxygen content.

Conditions for Setting the DTC

- No related DTCs.
- Engine coolant temperature (ETC) is above 50˚C (122˚F) for automatic transmission; 75˚C (167˚F) for manual transmission.
- The engine is operating in "closed loop."
- The engine has been running at least one minute.
- Canister purge duty cycle is greater than 2%.
- Engine speed is between 1500 RPM and 3000 RPM.
- Mass air flow is between 9 g/second and 42 g/second.
- Above conditions are present for a 3-second monitoring period.
- 90 seconds after "closed loop" and stoichiometric operation have been enabled, Bank 2 HO2S 1 transition ratio between lean to rich and rich to lean is less than 0.44 or greater than 3.8.

Action Taken When the DTC Sets

- The PCM will illuminate the malfunction indicator lamp (MIL) after the second consecutive trip in which the fault is detected.
- "Open loop" fuel control will be in effect.
- The PCM will store conditions which were present when the DTC was set as Freeze Frame and in the Failure Records data.

Conditions for Clearing the MIL/DTC

- The PCM will turn the MIL "OFF" on the third consecutive trip cycle during which the diagnostic has been run and the fault condition is no longer present.
- A history DTC P1154 will clear after 40 consecutive warm-up cycles have occurred without a fault.
- DTC P1154 can be cleared by using the Tech 2 "Clear Info" function or by disconnecting the PCM battery feed.

Diagnostic Aids

A multifunction in the HO2S heater ignition feed or ground circuit may cause a DTC P1154 to set. Check HO2S heater circuitry for intermittent faults or poor connections. If connections and wiring are OK and DTC P1154 continues to set, replace the Bank 2 HO2S 1.

Downloaded from www.Manualslib.com manuals search engine

Reviewing the Failure Records vehicle mileage since the diagnostic test last failed may help determine how often the condition that caused the DTC to be set occurs. This may assist in diagnosing the condition.

Test Description

Number(s) below refer to the step number(s) on the Diagnostic Chart.

3. A condition that affects other heated oxygen sensors indicates probable contamination. To avoid damaging replacement sensors, correct the condition which caused the contamination before replacing the affected sensors.
5. This step checks for conditions which may cause the heated oxygen sensor to appear faulty. Correct any of the described conditions if present.
8. To avoid damaging replacement sensors, correct the condition which caused the contamination before replacing the affected sensors.

DTC P1154 – HO2S Transition Time Ratio Bank 2 Sensor 1

Step	Action	Value(s)	Yes	No
1	Was the "On-Board Diagnostic (OBD) System Check" performed?	—	Go to *Step 2*	Go to *OBD System Check*
2	**IMPORTANT:** If any other DTCs are set (except P1133 and/or P1134), refer to those DTCs before proceeding with this diagnostic chart. 1. Idle the engine at operating temperature. 2. Operate the vehicle within parameters specified under "Conditions for Setting the DTC" criteria included in Diagnostic Support. 3. Using a Tech 2, monitor "DTC" info for DTC P1154 until the DTC P1154 test runs. Note the test result. Does Tech 2 indicate DTC failed this ignition?	—	Go to *Step 3*	Refer to *Diagnostic Aids*
3	Did the Tech 2 also indicate P1133, and/or P1134 test failed?	—	Go to *Step 17*	Go to *Step 4*
4	Check for leaks at the exhaust pipe joints. Are the joints leaking?	—	Go to *Step 5*	Go to *Step 6*
5	Tighten the U-bolt nuts at the leaking joints. Is your action complete?	—	Go to *Step 2*	—
6	Check for gaskets that are damaged or improperly installed. Are there damaged or misaligned gaskets?	—	Go to *Step 7*	Go to *Step 8*
7	1. Replace the damaged gaskets. 2. Align the connections. 3. Tighten the connections. Is your action complete?	—	Go to *Step 2*	—
8	Check for loose exhaust flange connections. Are the flange connections loose?	—	Go to *Step 9*	Go to *Step 10*
9	Tighten the stud nuts or bolts to specifications. Is your action complete?	—	Go to *Step 2*	—
10	Check for burned or corroded exhaust pipes. Are the exhaust pipes burned or corroded?	—	Go to *Step 11*	Go to *Step 12*
11	Replace the exhaust pipes, as required. Is your action complete?	—	Go to *Step 2*	—

Downloaded from www.Manualslib.com manuals search engine

DTC P1154 – HO2S Transition Time Ratio Bank 2 Sensor 1 (Cont'd)

Step	Action	Value(s)	Yes	No
12	Check for leaks at the exhaust manifold. Are there leaks at the exhaust manifold?	—	Go to *Step 13*	Go to *Step 14*
13	Tighten the bolts to specifications or replace the manifold if necessary. Is your action complete?	—	Go to *Step 2*	—
14	Visually/physically inspect the following items: ● Ensure that the Bank 2 HO2S 1 is securely installed. ● Check for corrosion on terminals. ● Check terminal tension (at Bank 2 HO2S 1 and at the PCM). ● Check for damaged wiring. Was a problem found in any of the above areas?	—	Go to *Step 18*	Go to *Step 15*
15	1. Disconnect Bank 2 HO2S 1. 2. Ignition "ON." 3. Using a DVM at the PCM side of the HO2S 1 connector, measure the voltage between the high signal circuit and ground. Also measure the voltage between the low signal circuit and ground. Are both voltages in the specified range?	3-4 V	Go to *Step 16*	Go to *Step 19*
16	1. With Bank 2 HO2S 1 disconnected, jumper the high and low (PCM side) signal circuits to ground. 2. Ignition "ON." 3. Using a Tech 2, monitor the Bank 2 HO2S 1 voltage. Does the Tech 2 indicate less than 10 mV and immediately return to about 450 mV when the jumper is removed?	—	Go to *Step 21*	Go to *Step 22*
17	Replace affected heated oxygen sensors. NOTE: Before replacing sensors, the cause of the contamination must be determined and corrected. ● Fuel contamination. ● Use of improper RTV sealant. ● Engine oil/coolant consumption. Is the action complete?	—	Verify repair	—
18	Repair condition as necessary. Is the action complete?	—	Verify repair	—
19	Check for faulty PCM connections or terminal damage. Is the action complete?	—	Verify repair	Go to *Step 20*
20	Repair open, short or grounded signal circuit. Is the action complete?	—	Verify repair	—

Downloaded from www.Manualslib.com manuals search engine

DTC P1154 – HO2S Transition Time Ratio Bank 2 Sensor 1 (Cont'd)

Step	Action	Value(s)	Yes	No
21	Replace Bank 2 HO2S 1. Is the action complete?	—	Verify repair	—
22	Replace the PCM. **IMPORTANT:** The replacement PCM must be programmed. Refer to *On-Vehicle Service* in *Powertrain Control Module and Sensors* for procedures. And also refer to latest Service Bulletin. Check to see if the Latest software is released or not. And then Down Load the LATEST PROGRAMMED SOFTWARE to the replacement PCM. Is the action complete?	—	Verify repair	—

Downloaded from www.Manualslib.com manuals search engine

Diagnostic Trouble Code (DTC)
P1167 Fuel System Rich During Decel Fuel Cut Off (Bank 1)

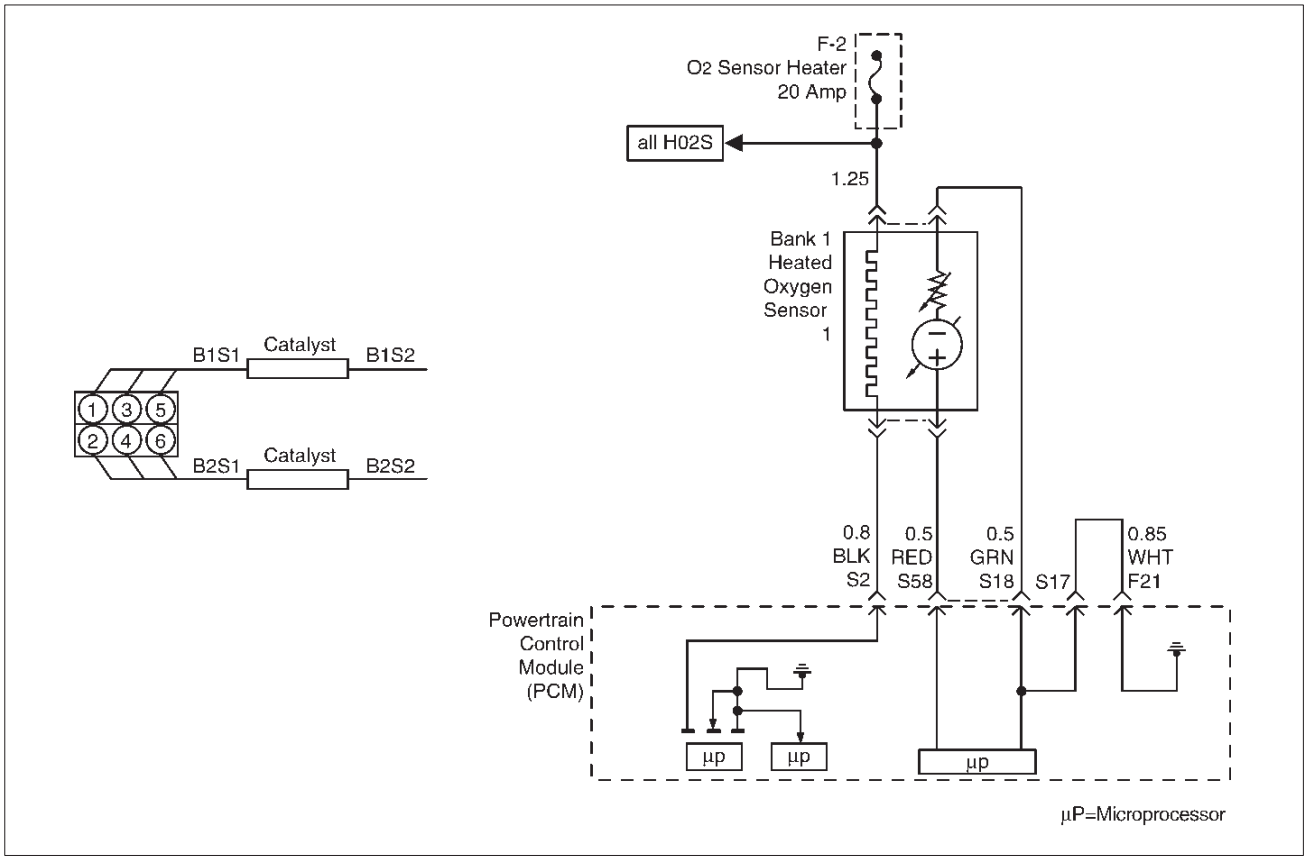

D06RY00171

Circuit Description

The powertrain control module (PCM) continuously monitors the heated oxygen sensor (HO2S) activity for 90 seconds after “closed loop” has been enabled. During the monitoring period the powertrain control module (PCM) counts the number of times a rich to lean and respones is indicated and adds the amountof time it look to complete all rich to lean transisitions and lean to rich transitions.
This code detects if Bank1 02 sensor indicated rich exhaust while in Decel Fuel Cut Off (DFCO) for fuel control sensors.

Conditions for setting the DTC

- No related DTCs.
- The engine coolant temperature is more than 60 ˚C (140 ˚F).
- Engine is operating in “closed loop” power enrichment mode for 3 secondes.
- While in “power enrichment” mode the oxygen sensor voltage remains more than 600mV in DFCO.

Action Taken When the DTC Sets

- The PCM will not illuminate the malfunction malfunction indicator lamp (MIL).
- The PCM will store condition which were present when the DTC was set as Freeze Frame and in the Failure Records data.

Conditions for Clearing the MIL/DTC

- A history DTC P1167 will clear after 40 cosecutive trip cycle during which the warm up cycles have occurred without a fault.
- DTC P1167 can be cleared using the Tech 2 “Clear Info” function or by disconnecting the PCM battery feed.

Diagnostic Aids

- Check for faulty fuel injectors and fuel pump.

Downloaded from www.Manualslib.com manuals search engine

Diagnostic Trouble Code (DTC)
P1167 Fuel System Rich During Decel Fuel Cut Off (Bank1)

Step	Action	Value(s)	Yes	No
1	Was the "On-Board (OBD) System Check" performed?	—	Go to *Step 2*	Go to *OBD System Check*
2	Are any component related DTCs set?		Go to *component DTC charts*	Go to *Step 3*
3	1. Place the transmission in Park. 2. Using a Tech 2, HO2S 1 voltage while running warm engine 75 ˚C – 95 ˚C (167 ˚F – 203 ˚F) at 1200 RPM. 3. HO2S 1 votages should vary within the specified range. (100 – 900mV) 4. Quickly open the wide open the throtle for a few Did the voltage suddenly rise toward the low endof the specified range?	100 – 600 mV	Go to *OBD System Check*	Go to *Step 4*
4	1. Disconnect the fuel pump relay and crank the engine to relieve the fuel pressure. 2. Install the fuel pressure gauge. 3. Start the engine and idle at normal operating temperatur. 4. Disconnect the vacuum line going to the fuel pressure regurlator. With the engine running, is the fuel pressure within the specified range?	280 – 325Kpa (41 – 46psi)	Go to *OBD System Check*	Go to *Step 5*
5	1. Ignition "OFF". 2. Remove the fuel pump relay and replace it with a fused jumper which will connect the relay's battery terminal to the terminal leading to the fuel pump fuse. 3. While the fuel pump is opreating, use pliers to slowly close the return line (do not exceed the first specified value). Using the pliers to restrict the return line, can the fuel pressure be manipulated to exceed the second value? Is the TP sensor reading near the specified value?	414KPa (60psi) 325KPa (46psi)	Refer to *Diagnostic Aids*	Go to *Step 6*
6	Check the following items; ● Faulty fuel pump ● Incorrect fuel pump ● Incorrect fuel being used ● Cold fuel If a problem is found, repair one as necessary. Was a problem found?	—	Verify repair	—

Downloaded from www.Manualslib.com manuals search engine

Diagnostic Trouble Code (DTC)
P1169 Fuel System Rich During Decel Fuel Cut Off (Bank 2)

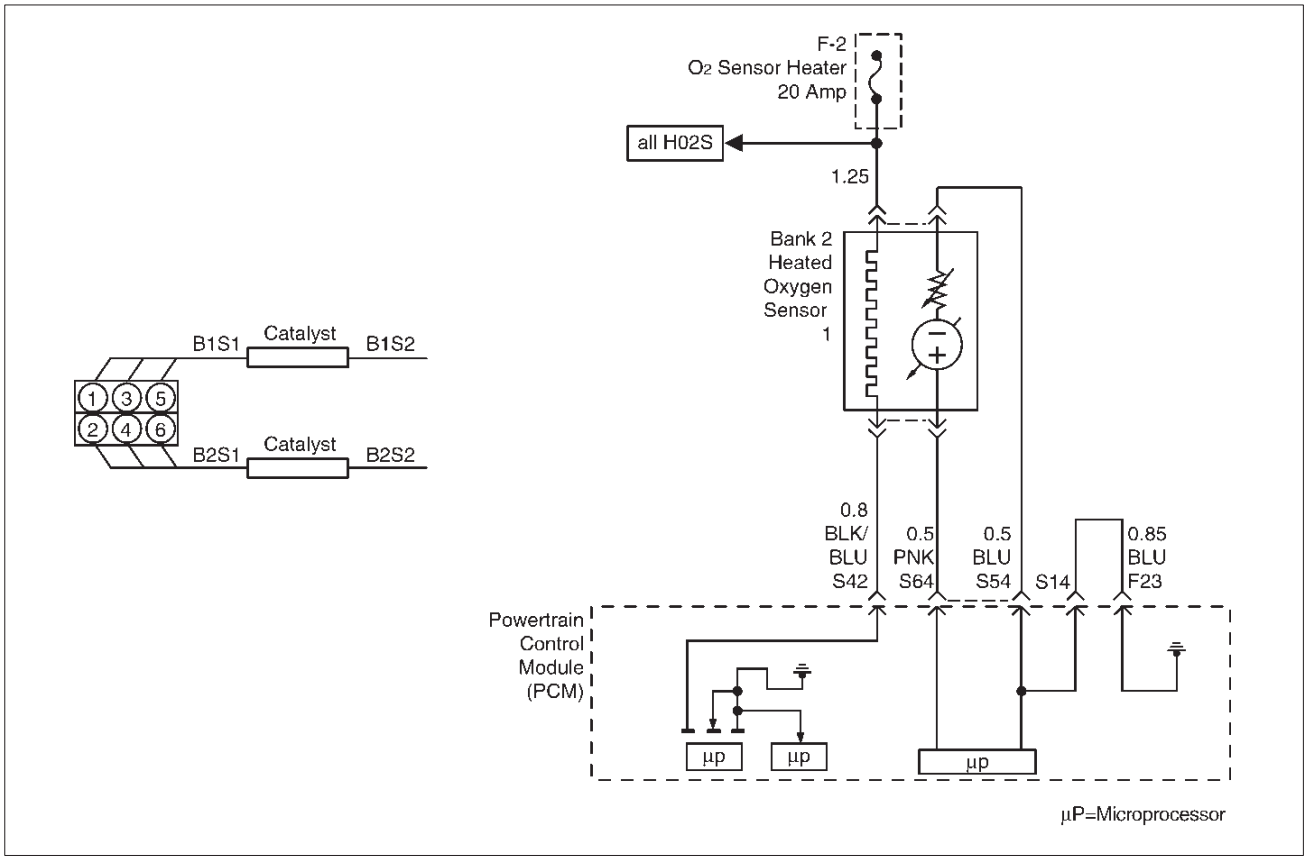

D06RY00175

Circuit Description

The powertrain control module(PCM)
continuously monitors the heated oxygen sensor (HO2S) activity for 90 seconds after “closed loop” has been enabled. During the monitoring period the powertrain control module (PCM) counts the number of times a rich to lean and respones is indicated and adds the amountof time it look to complete all rich to lean transisitions and lean to rich transitions.
This code detects if Bank2 sensor indicated rich exhaust while in Decel Fuel Cut Off (DFCO) for fuel control sensors.

Conditions for setting the DTC

- No related DTCs.
- The engine coolant temperature is more than 60 ˚C (140 ˚F).
- Engine is operating in “closed loop” power enrichment mode for 3 secondes.
- While in “power enrichment” mode the oxygen sensor voltage remains more than 600mV in DFCO.

Action Taken When the DTC Sets

- The PCM will not illuminate the malfunction malfunction indicator lamp(MIL).
- The PCM will store condition which were present when the DTC was set as Freeze Frame and in the Failure Records data.

Conditions for Clearing the MIL/DTC

- A history DTC P1169 will clear after 40 cosecutive trip cycle during which the warm up cycles have occurred without a fault.
- DTC P1169 can be cleared using the Tech 2 “Clear Info” function or by disconnecting the PCM battery feed.

Diagnostic Aids

- Check for faulty fuel injectors and fuel pump.

Downloaded from www.Manualslib.com manuals search engine

Diagnostic Trouble Code (DTC)
P1169 Fuel System Rich During Decel Fuel Cut Off (Bank2)

Step	Action	Value(s)	Yes	No
1	Was the “On-Board (OBD) System Check” performed?	—	Go to *Step 2*	Go to *OBD System Check*
2	Are any component related DTCs set?		Go to *component DTC charts*	Go to *Step 3*
3	1. Place the transmission in Park. 2. Using a Tech 2, HO2S 2 voltage while running warm engine75 C – 95 C (167 F – 203 F) at 1200 RPM. 3. HO2S 1 votages should vary within the specified range. (100 – 900mV) 4. Quickly open the wide open the throtle for a few Did the voltage suddenly rise toward the low end of the specified range?	100 – 600 mV	Go to *OBD System Check*	Go to *Step 4*
4	1. Disconnect the fuel pump relay and crank the engine to relieve the fuel pressure. 2. Install the fuel pressure gauge. 3. Start the engine and idle at normal operating temperatur. 4. Disconnect the vacuum line going to the fuel pressure regurlator. With the engine running, is the fuel pressure within the specified range?	280 – 325Kpa (41 – 46psi)	Go to *OBD System Check*	Go to *Step 5*
5	1. Ignition “OFF”. 2. Remove the fuel pump relay and replace it with a fused jumper which will connect the relay’s battery terminal to the terminal leading to the fuel pump fuse. 3. While the fuel pump is opreating, use pliers to slowly close the return line (do not exceed the first specified value). Using the pliers to restrict the return line, can the fuel pressure be manipulated to exceed the second value? Is the TP sensor reading near the specified value?	414KPa (60psi) 325KPa (46psi)	Refer to *Diagnostic Aids*	Go to *Step 6*
6	Check the following items; ● Faulty fuel pump ● Incorrect fuel pump ● Incorrect fuel being used ● Cold fuel. If a problem is found, repair one as necessary. Was a problem found?	—	Verify repair	—

Downloaded from www.Manualslib.com manuals search engine

Diagnostic Trouble Code (DTC) P1171 Fuel System Lean During Acceleration

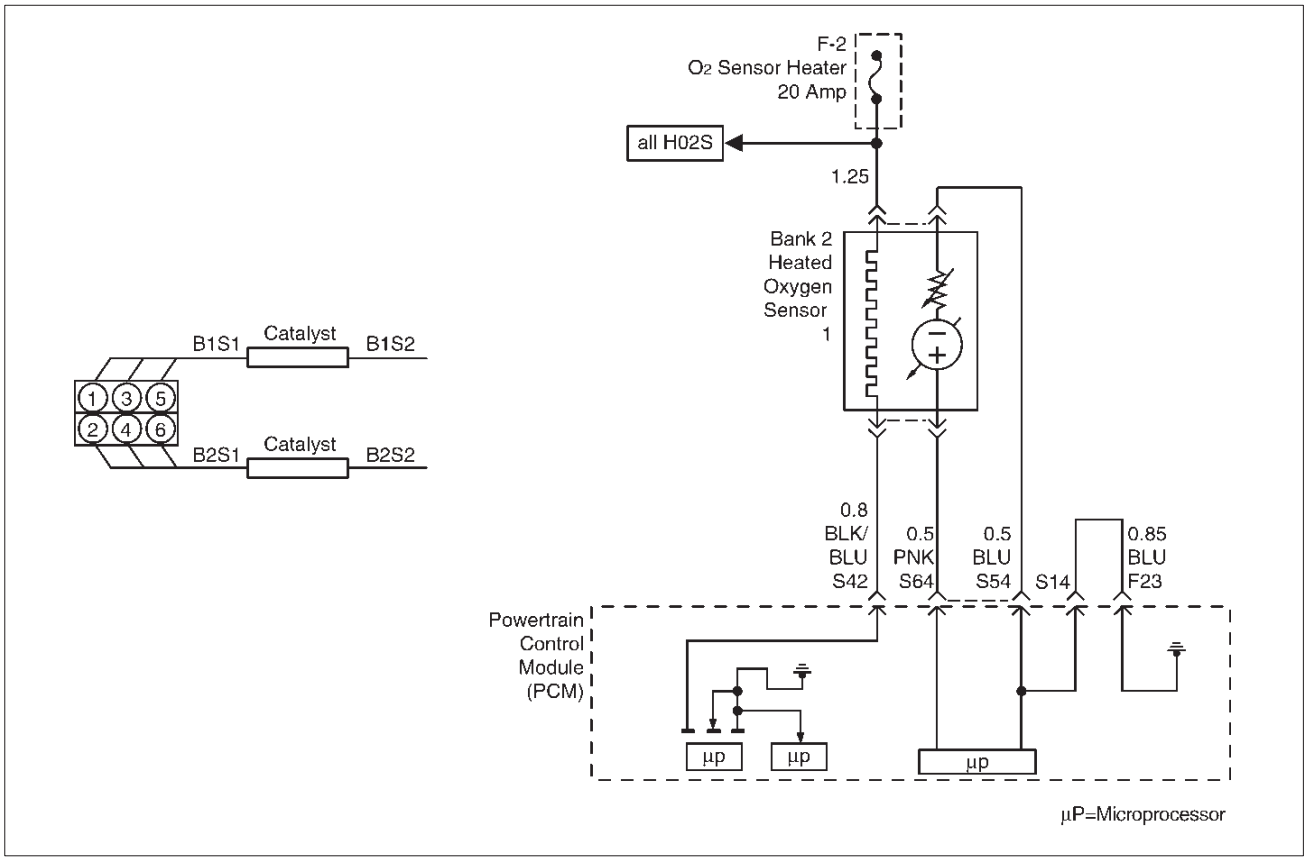

D06RY00175

Circuit Description

The powertrain control module (PCM) internal circuitry can identify if the vehicle fuel system is capable of supplying adequate amounts of fuel during heavy acceleration (power enrichment). The PCM monitors the voltage of the oxygen sensor during power enrichment. When a power enrichment mode of operation is requested during “closed loop” operation (by heavy acceleration), the PCM will provide more fuel to the engine. Under these conditions the PCM should detect a “rich” condition (high oxygen sensor voltage). If this “rich” exhaust is not detected at this time, a DTC P1171 will set. A plugged fuel filter, restricted fuel line, restricted in-tank filter or defective fuel pump can prevent adequate amounts of fuel from being supplied during power enrichment mode.

Conditions for Setting the DTC

- No related DTCs.
- Engine is operating in “closed loop power enrichment” mode for 3 seconds.
- Engine coolant temperature is above 60˚C (140˚F).
- While in “power enrichment” mode the oxygen sensor voltage remains below 400 mV for 3 seconds.

Action Taken When the DTC Sets

- The PCM will illuminate the malfunction indicator lamp (MIL) the first the fault is detected.
- The PCM will store conditions which were present when the DTC was set as Freeze Frame and in the Failure Records data.

Conditions for Clearing the MIL/DTC

- The PCM will turn the MIL “OFF” on the third consecutive trip cycle during which the diagnostic has been run and the fault condition is no longer present.
- A history DTC P1171 will clear after 40 consecutive warm-up cycles have occurred without a fault.
- DTC P1171 can be cleared by using the Tech 2 “Clear Info” function or by disconnecting the PCM battery feed.

Diagnostic Aids

- A restricted fuel filter or fuel line, restricted in-tank filter, or a defective fuel pump may supply adequate amounts of fuel at idle, but may not be able to supply enough fuel during heavy acceleration.
- Water or alcohol in the fuel may cause low HO2S voltage during acceleration.
- Check for faulty or plugged fuel injector(s).
- Check for low fuel.

Downloaded from www.Manualslib.com manuals search engine

Test Description

Number(s) below refer to the step number(s) on the Diagnostic Chart.

4. When the engine is idling or at steady cruise, the HO2S voltage should vary from between approximately 100 mV to 900 mV. It is possible to measure a satisfactory fuel pressure at idle even though the pressure may drop at high flow requirements. It may be necessary to watch fuel pressure at high engine load.
5. Wrap a shop towel around the fuel pressure connector to absorb any small amount of fuel leakage that may occur when installing gauge. Ignition “ON,” pump pressure should be 280-320 kPa.
7. Add Caution, Use correct pliers so damage to fuel lines will not occur.

Downloaded from www.Manualslib.com manuals search engine

DTC P1171 – Fuel System Lean During Acceleration

Step	Action	Value(s)	Yes	No
1	Was the "On-Board Diagnostic (OBD) System Check" performed?	—	Go to *Step 2*	Go to *OBD System Check*
2	Are any component-related DTCs set?	—	Go to component DTC charts	Go to *Step 3*
3	1. Check the vehicle's fuel tank for an adequate amount of fuel. 2. Add fuel to the vehicle's fuel tank if the tank is almost empty. Was fuel added to the vehicle's fuel tank?	—	Go to *Step 4*	Go to *Step 5*
4	1. Place the transmission in park. 2. Using a Tech 2, observe HO2S 1 voltage while running warm engine 75˚C-95˚C (167˚F-203˚F) at 1200 RPM. 3. HO2S 1 voltage should vary within the specified range. 4. Quickly open the throttle halfway for a few seconds. Did the voltage suddenly rise toward the high end of the specified range?	100-900 mV	Go to *Fuel System Electrical Test*	Go to *Step 5*
5	1. Disconnect the fuel pump relay and crank the engine to relieve the fuel pressure. 2. Install the fuel pressure gauge. 3. Start the engine and idle at normal operating temperature. 4. Disconnect the vacuum line going to the fuel pressure regulator. With the engine running, is the fuel pressure within the specified range?	280-325 kPa (41-46 psi)	Go to *OBD System Check*	Go to *Step 6*
6	Check for restricted fuel lines or restricted in-line filter. Was a problem found?	—	Verify repair	Go to *Step 7*
7	1. Ignition "OFF." 2. Remove the fuel pump relay and replace it with a fused jumper which will connect the relay's battery terminal to the terminal leading to the fuel pump fuse. 3. While the fuel pump is operating, use pliers to slowly close the return line (do not exceed the first specified value). Using the pliers to restrict the return line, can the fuel pressure be manipulated to exceed the second specified value?	414 kPa (60 psi) 325 kPa (46 psi)	Go to *Diagnostic Aids*	Go to *Step 8*
8	Check for: • Faulty fuel pump • Restricted fuel pump strainer (sock) • Incorrect fuel pump • Incorrect fuel being used • Hot fuel Is the action complete?	—	Verify repair	—

Downloaded from www.Manualslib.com manuals search engine

Diagnostic Trouble Code (DTC) P1220 Throttle Position Senser2 (TPS2) Circuit Fault

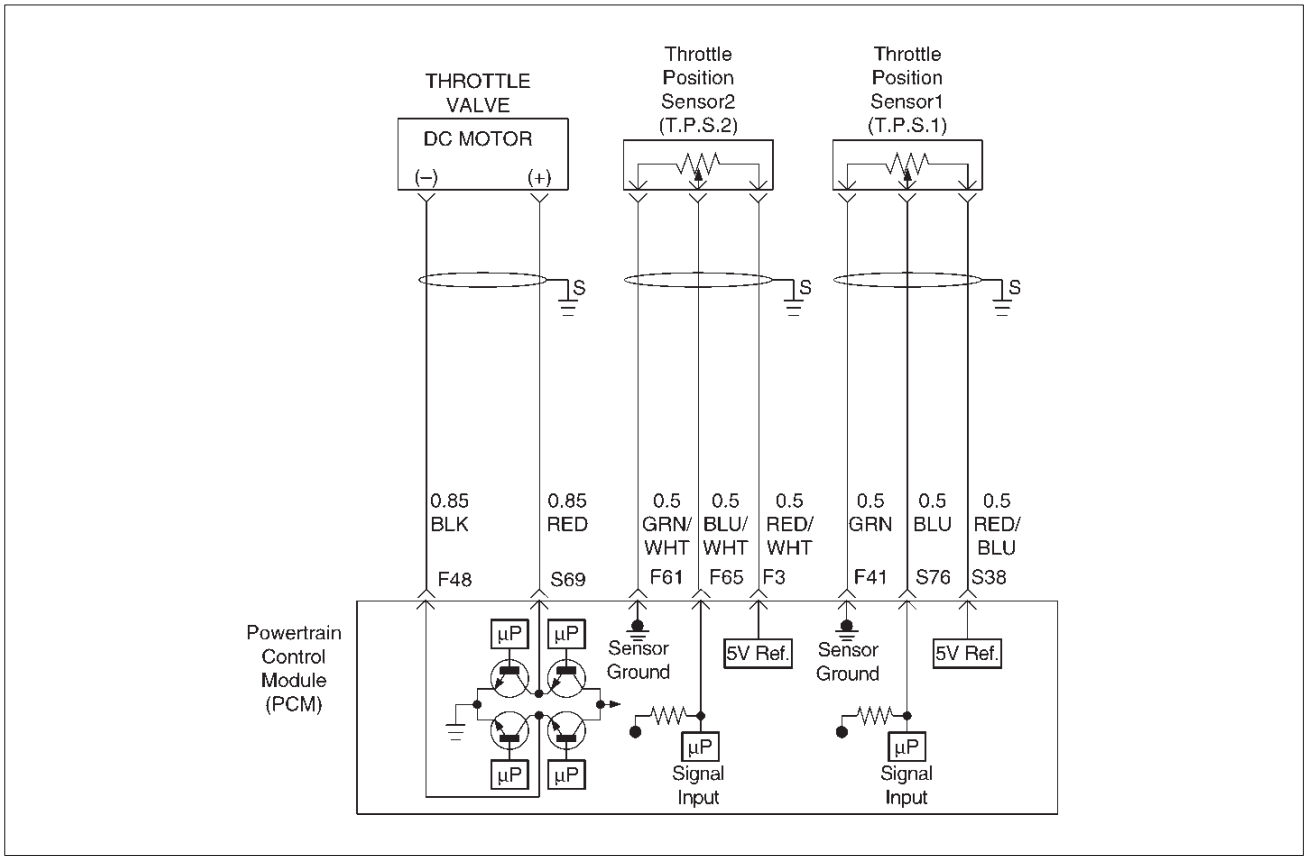

D06RY00088

Circuit Description

- The throttle position (TP2) sensor circuit provides a voltage signal relative to throttle blade angle.

  The throttle blade angle will vary about 92 % at closed throttle to about 8 % at wide open throttle (WOT).

  This code detects a continuous short to ground or high in either the cicuit or the sensor.

Conditions for setting the DTC

- The Ignition is “ON”.
- The throttle blade angle is less than 2.5 % or more tnan 97.5 % for 18 failres within 500 test samples (15.6m sec).

Action Taken When the DTC Sets

- The PCM will store condition which were present when the DTC was set as Freeze Frame and in the Failure Records data.

Conditions for Clearing the MIL/DTC

- The PCM will turn the MIL “OFF” on the third consecutive trip cycle during which the diagnostic has been run and the fault condtion is no longer present.
- A history DTC P1120 will clear after 40 consecutive trip cycle during which the warm up cycles have occurred without a fault.
- DTC P1120 can be cleared using the Tech2 “Clear Info” function or by disconnecting the PCM battery feed.

Diagnostic Aids

An intermittent may be caused by the following:

- Poor connectons.
- Mis routed harness.
- Rubbed through wire insulation.
- Broken wire inside the insulation.

Check for the following conditions:

- The MAP sensor shares a 5 Volt reference with the Fuel Tank Pressure.If these codes are also set, it could indicate a problem with the 5 Volt reference circuit.
- The MAP sensor shares a ground with the Fuel Tank Pressure,the ECT sensor,and the Transmission Fluid
- Poor connection at PCM-Inspect harness connectors for backed out terminals,improper mating,broken locks, improperly formed or damaged terminals,and poor terminal to wire connection.
- Damaged harness–Inspect the wiring harness for damage. If the harness appears to be OK,observe the TP sensor display on the Tech 2 while moving connectors and wiring harnesses related to the sensor.

  A change in the display will indicate the location of the fault. If DTC P1120 cannot be duplicated,the information included in the Faillure Records data can be useful in determined vehicle mileage since the DTC was last set.

Downloaded from www.Manualslib.com manuals search engine

If it is determined that the DTC occurs intermittently,performing the DTC P1120 Diagnostic Chart may isolate the cause of the fault.

DTC P1220-TPS 2 Circuit Fault

Step	Action	Value(s)	Yes	No
1	Was the “On-Board (OBD) System Check” performed?	—	Go to *Step 2*	Go to *OBD System Check*
2	Was the “Electric Throttle Control (ETC) System Check” performed?	—	Go to *Step 3*	Go to *ETC System Check*
3	1. Ignition “ON”, engine not running. 2. Observe the MAP reading on the Tech 2. Is the MAP reading less than the specified value?	65 kPa	Go to *Step 4*	Go to *Step 7*
4	1. Disconnect the MAP sensor. 2. Connect a test 5 volt reference circuit and the MAP signal at the MAP sensor harness connector. 3. Observe the MAP reading on the Tech 2. Is the MAP reading less than the specified value? (If no, start with diagnosis chart for other sensors in the circuit and see if 5V returns.)	—	Go to *Step 6*	Go to *Step 5*
5	1. Check the MAP signal circuit between the PCM and MAP ground circuit. 2. If the MAP signal circuit is open or shorted, repair as necessary. Was the MAP signal circuit open or shorted?	—	Verify repair	Go to *Step 13*
6	Replace the MAP sensor. Is the action complete?	—	Verify repair	—
7	Observe the TP angle reading on the Tech-2 while slowly opening the throttle. Does the TP angle increase steadily and evenly from the closed throttle value to the wide open throttle value?	Closed TP sensor 1 =8 ~ 10 % TP sensor 2 =90 ~ 92 % Wide open TP sensor 1 =90 ~ 92 % TP sensor 2 =8 ~ 10 %	Refer to *Diagnostic Aids*	Go to *Step 8*
8	1. Disconnect the TP sensor. 2. Observe the TP sensor reading on the Tech2. Is the TP sensor reading near the specified value?	0V	Go to *Step 9*	Go to *Step 10*
9	1. Connect a test light between the 5Volt reference circuit and the TP2 sensor signal circuit at the TPsensor harness connector. 2. Observe the TP sensor reading on the Tech 2. Is the TP sensor reading near the specified value?	5V	Go to *Step 12*	Go to *Step 11*

Downloaded from www.Manualslib.com manuals search engine

DTC P1220-TPS 2 Circuit Fault (Cont'd)

Step	Action	Value(s)	Yes	No
10	Check the following items; 1. TP2 signal circuit for a short to voltage. 2. TP2 sensor ground circuit for high resistance between the PCM and the TP2 sensor. 3. TP2 sensor ground circuit for a poor connection. 4. If a problem is found,repair wiring harness as necessary. Was a problem found?	—	Verify repair	Go to *Step 13*
11	Check the following items; 1. TP2 signal circuit or 5 volt reference circuit for a poor connection. 2. TP2 signal circuit or 5 volt reference circuit for high resistance between the PCM and the TP sensor. 3. If a problem is found, repair wiring harness as necessary. Was a problem found?	—	Verify repair	Go to *Step 13*
12	Replace the TP sensor. Is the action complete?	—	Verify repair	—
13	Replace the PCM. **IMPORTANT:** The replacement PCM must be programmed. Refer to *ON-Vehicle Service in Power Control Module and Sensors for procedures.* And also refer to latest Service Bulletin. Check to see if the latest software is released or not. And then Down Load the LATEST PROGRAMMED SOFTWARE to the replasement PCM. Is the action complete?	—	Verify repair	—

Downloaded from www.Manualslib.com manuals search engine

Diagnosis Truble Code(DTC)
P1221 TPS1 – TPS2 correlation(Circuit Performance)

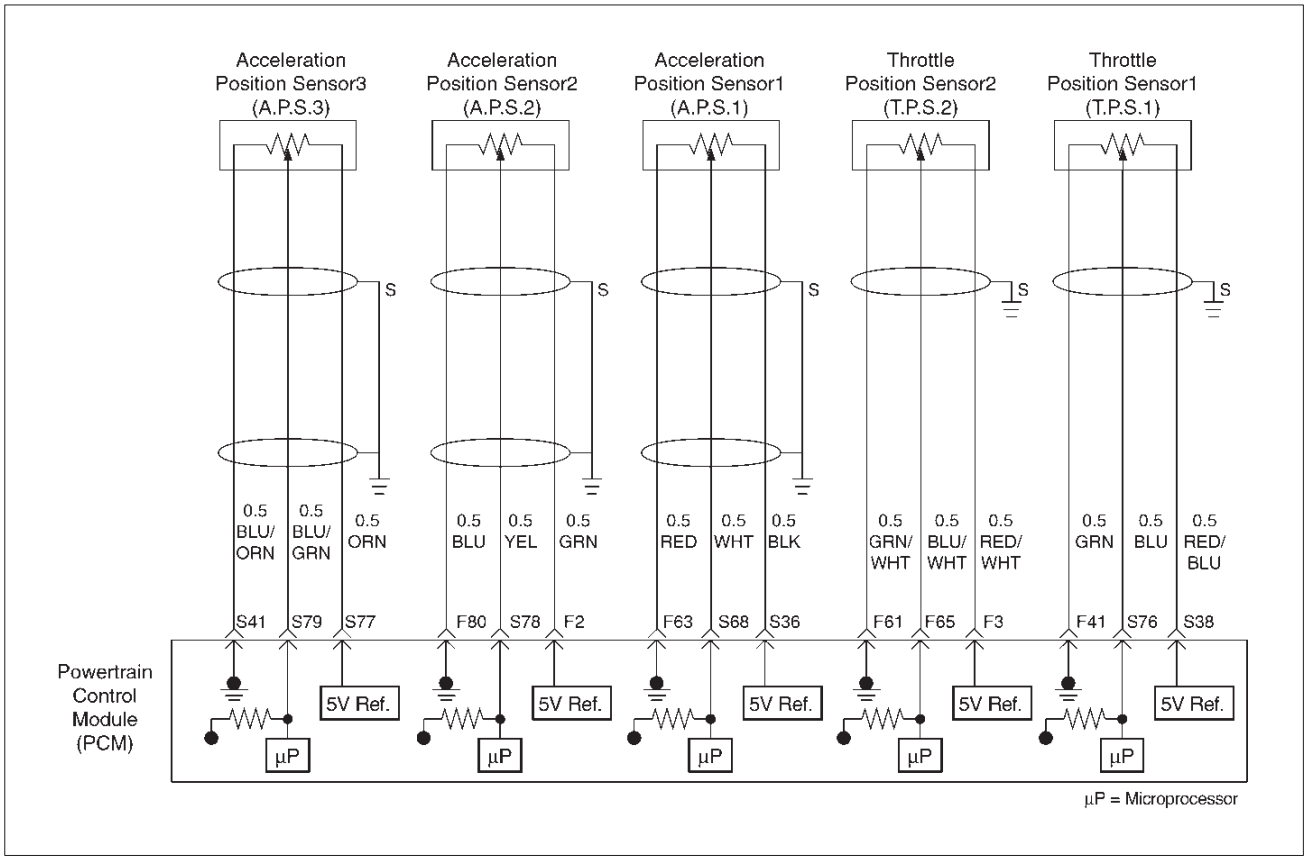

D06RY00157

Circuit Description

- The powertrain control module (PCM) controls engine speed by adjusting the position of the throttle control valve (DC motor). The throttle motor is a DC motor driven by one coil. The PCM applies current to DC motor coil in steps (%) to adjustment the valve into a passage in the throttle body to air flow.

  This method allows highly accurate control of engine speed and quick response to changes in engine load.
- The acceleration position (AP) sensor circuit provides a voltage signal relative to acceleration pedal angle.

  The acceleration pedal angle (AP1) will vary about 13% at idle position to about 87% at open throttle(WOT).

  APS signal is used to determine which DC will adjusting throttle position.

  After the APS signal has been processed by the PCM, it will command DC motor to allow a move of throttle position.
- Acceleration pedal – Check for objects blocking the AP sensor or pedal arm with spring, and excessive deposits in the acceleration pedal arm and on the acceleration pedal.

Test Description

Number(s) below refer to the step number(s) on the Diagnostic Chart:

2. Visually/physically inspect for the following throttle valve conditions.

3.Visually/physically inspect for the following acceleration pedal conditions.

5.Check the following circuits for throttle valve and DC moter. Check the following TP sensor resistance and DC motor.

7.Check the following circuits for acceleration pedal. Check the following AP sensor resistance.

9.Following DTC: Software detect Error for ETC system.

10.Following DTC: Software detect Error for ETC system.

Diagnostic Aids

- An intermittent may be caused by a poor connection, rubbed–through wire insulation or a wire broken inside the insulation. Check for poor connections or a damaged harness. Inspect the PCM harness and connector for improper mating, broken locks, improperly formed or damaged terminals, poor terminal-to-wire connection, and damaged harness.
- Throttle body – Check for objects blocking the DC motor or throttle bore, excessive deposits in the ETC passage and on the valve spring, and excessive deposits in the throttle bore and on the throttle valve plate.

Downloaded from www.Manualslib.com manuals search engine

Diagnosis Truble Code(DTC)
P1221 TPS1 – TPS2 correlation(Circuit Perfoemance)

Step	Action	Value(s)	Yes	No
1	Was the “On-Board (OBD) System Check”performed?	—	Go to *Step 2*	Go to *OBD System Check*
2	Was the “Electric Throttle Control (ETC) System Check” performed?	—	Go to *Step 3*	Go to *ETC System Check*
3	Visually/physically inspect for the following conditions: ● Throttle body tampering. ● Restricted intake throttle system. Check for a possible collapsed air intake duct, restricted air filter element, or foreign objects blocking the air intake system. ● Throttle body: Check for objects blocking the throttle passage or throttle bore, excessive deposits in the throttle passage and on the throttle valve, and excessive deposits in the throttle bore and on the throttle plate. ● Throttle body with lever: Check for objects send round the throttle spring lever that lever is smooth movement, and spring lever has not excessive play Do any of the above require a repair?	—	Refer to *appropriate section for on–vehicle service*	Go to *Step 5*
4	Visually/physically inspect for the following conditions: ● Acceleration pedal tampering. ● Acceleration pedal : Check for objects blocking the spring or pedal arm. ● Acceleration pedal : Check for objects move the acceleration pedal that pedal is smooth movement, and acceleration pedal arm has not excessive play. Do any of the above require a repair?	—	Refer to *appropriate section for on–vehicle service*	Go to *Step 5*
5	1. Check for a poor connection at the throttle body harness connector. 2. Check for a poor connection at the acceleration position sensor harness connector. 3. If a problem is found, replace faulty terminals as necessary. Was a problem found?	—	Verify repair	Go to *Step 8*
6	1. Check the following circuits for an open, short to voltage, short to ground, or poor connection at the PCM: Throttle position sensor 1 circuit. Throttle position sensor 2 circuit. Throttle DC motor circuit. Throttle position sensor resistance. Throttle DC motor resistance. 2. If a problem is found, repair as necessary. Was a problem found?	Vcc-GND 1–7kμ SIG-DND change resistance 0.3 – 100μ	Verify repair	Go to *Step 7*

Downloaded from www.Manualslib.com manuals search engine

Diagnosis Truble Code(DTC)
P1221 TPS1 – TPS2 correlation(Circuit Perfoemance) (Cont'd)

Step	Action	Value(s)	Yes	No
7	Replace the throttle valve. Is the action complete?	—	Go to *Step 4*	—
8	1. Check the following circuits for an open, short to voltage, short to ground, or poor connection at the PCM: ● Acceleration position sensor 1 circuit. ● Acceleration position sensor 2 circuit. ● C position sensor 3 circuit. ● V position sensor resistance. 2. If a problem is found, repair as necessary. Was a problem found?	—	Verify repair	Go to *Step 9*
9	Replace the acceleration position sensor. Is the action complete?	—	Go to *Step 10*	—
10	Following below the DTCs stored: P1125, P1290, P1295, P1299	—	Go to *applicable DTC table*	Go to *Step 11*
11	Following below the DTCs stored: P1514, P1515, P1516, P1523, P1271, P1272, P1273	—	Go to *applicable DTC table*	Go to *Step 12*
12	Replace the PCM. **IMPORTANT:** The replacement PCM must be programmed. Refer to *ON-Vehicle Service in Power Control Module and Sensors for procedures.* And also refer to latest Service Bulletin. Check to see if the latest software is released or not. And then Down Load the LATEST PROGRAMMED SOFTWARE to the replasement PCM. Is the action complete?	—	Verify repair	—

Downloaded from www.Manualslib.com manuals search engine

Diagnostic Trouble Code (DTC) P1271 APS 1– 2 Correlation Error

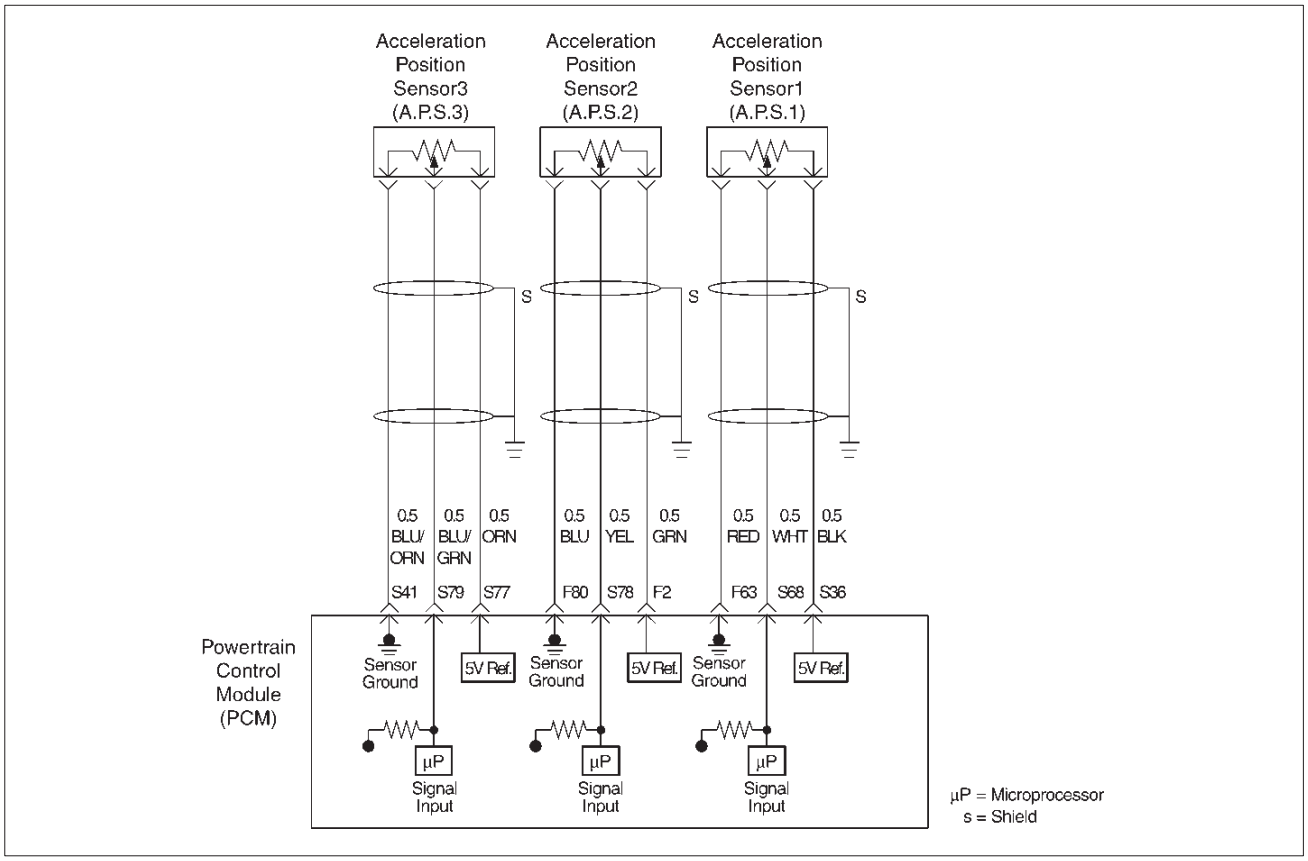

D06RY00075

Circuit Description

- The acceleration position (AP) sensor circuit provides a voltage signal relative to acceleration pedal angle.

  The acceleration pedal angle (AP1) will vary about 13 % at idle position to about 87 % at wide open throttle(WOT).

  This code detects a correlation error between APS1 and APS2.

Conditions for setting the DTC

- The Ignition is “ON”.
- The acceleration pedal angle difference is less than 4.5 % between ASP1 and APS2 for 50 counts within 50 test samples (15.6 m sec).

Action Taken When the DTC Sets

- The PCM will store condition which were present when the DTC was set as Freeze Frame and in the Failure Records data.

Conditions for Clearing the MIL/DTC

- The PCM will turn the MIL “OFF” on the third consecutive trip cycle during which the diagnostic has been run and the fault condition is no longer present.
- A history DTC P1271 will clear after 40 consecutive trip cycle during which the warm up cycles have occurred without a fault.
- DTC P1271 can be cleared using the Tech 2 “Clear Info” function or by disconnecting the PCM battery feed.

Diagnostic Aids

An intermittent may be caused by the following:

- Poor connectons.
- Mis routed harness.
- Rubbed through wire insulation.
- Broken wire inside the insulation.

Check for the following conditions:

- Poor connection at PCM-Inspect harness connectors for backed out terminals, improper mating, broken locks, improperly formed or damaged terminals, and poor terminal to wire connection.
- Damaged harness-Inspect the wiring harness for damage. If the harness appears to be OK, observe the APP sensor 1, APP sensor 2 display on the Tech 2 while moving connectors and wiring harnesses related to the sensor.

  A change in the display will indicate the location of the fault. If DTC P1271 cannot be duplicated,the information included in the Faillure Records data can be useful in determined vehicle mileage since the DTC was last set.

  If it is determined that the DTC occurs intermittently, performing the DTCP1271 Diagnostic Chart may isolate the cause of the fault.

Downloaded from www.Manualslib.com manuals search engine

DTC P1271 – APS 1– 2 Correlation Error

Step	Action	Value(s)	Yes	No
1	Was the “On-Board (OBD) System Check” performed?	—	Go to *Step 2*	Go to *OBD System Check*
2	Was the “Electric Throttle Control (ETC) System Check” performed?	—	Go to *Step 3*	Go to *ETC System Check*
3	Observe the AP angle reading on the Tech 2 while slowly opening the throttle. Does the AP angle increase steadily and evenly from the closed throttle value to the wide open throttle value?	Idle position APP sensor 1 =13 % APP sensor 2 =85 ~ 89 % Wide open throttle APP sensor 1 =85 ~ 89 % APP sensor 2 =11 ~ 15 %	Refer to *Diagnostic Aids*	Go to *Step 4*
4	1. Disconnect the AP sensor. 2. Observe the AP sensor reading on the Tech 2. Is the AP sensor reading near the specified value?	0V	Go to *Step 5*	Go to *Step 6*
5	1. Connect a test light between the 5 Voltge supply circuit and the AP sensor signal circuit at the AP1, AP2 sensor harness connector. 2. Observe the AP sensor reading on the Tech 2. Is the AP sensor reading near the specified value?	5V	Go to *Step 7*	Go to *Step 8*
6	Check the following items; 1. AP1and AP2 signal circuit for a short to voltage. 2. AP1and AP2 sensor ground circuit for high resistance between the PCM and the AP sensor. 3. AP1and AP2 sensor ground circuit for a poor connection. 4. If a problem is found, repair wiring harness as necessary. Was a problem found?	—	Verify repair	Go to *Step 9*
7	Check the following items; 1. AP1and AP2 signal circuit or 5 volge supply circuit for a poor connection. 2. AP1and AP2 signal circuit or 5 volge supply circuit for high resistance between the PCM and the AP1 and AP2 sensor. 3. If a problem is found,repair wiring harness as necessary. Was a problem found?	—	Verify repair	Go to *Step 9*
8	Replace the AP sensor. Is the action complete?	—	Verify repair	—

Downloaded from www.Manualslib.com manuals search engine

DTC P1271 – APS 1– 2 Correlation Error (Cont'd)

Step	Action	Value(s)	Yes	No
9	Replace the PCM. **IMPORTANT:** The replacement PCM must be programmed. Refer to *ON-Vehicle Service in Power Control Module and Sensors for procedures.* And also refer to latest Service Bulletin. Check to see if the latest software is released ornot. And then Down Load the LATEST PROGRAMMED SOFTWARE to the replasement PCM. Is the action complete?	—	Verify repair	—

Downloaded from www.Manualslib.com manuals search engine

Diagnostic Trouble Code (DTC) P1272 APS 2 – 3 Correlation Error

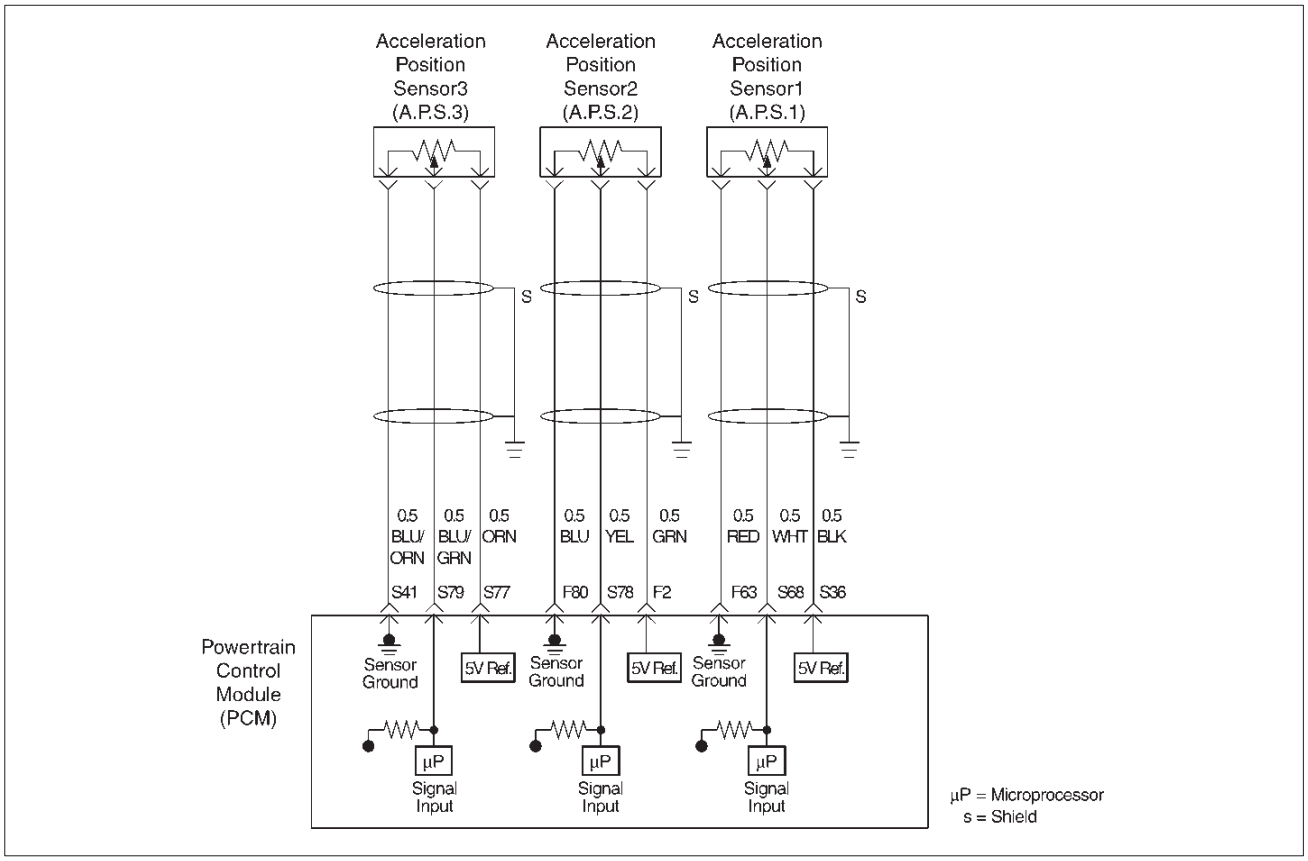

Circuit Description

- The acceleration position (AP) sensor circuit provides a voltage signal relative to acceleration pedal angle.

  The acceleration pedal angle (AP2) will vary about 87 % at idle position to about 13 % at wide open throttle (WOT).

  This code detects a correlation error betweenAPS2 and APS3.

Conditions for setting the DTC

- The Ignition is “ON”.
- The acceleration pedal angle difference is less than 4.5 % between ASP2 and APS3 for 50 counts within 50 test samples (15.6 m sec).

Action Taken When the DTC Sets

- The PCM will store condition which were present when the DTC was set as Freeze Frame and in the Failure Records data.

Conditions for Clearing the MIL/DTC

- The PCM will turn the MIL “OFF” on the third consecutive trip cycle during which the diagnostic has been run and the fault condition is no longer present.
- A history DTC P1272 will clear after 40 consecutive trip cycle during which the warm up cycles have occurred without a fault.
- DTC P1272 can be cleared using the Tech 2 “Clear Info” function or by disconnecting the PCM battery feed.

Diagnostic Aids

An intermittent may be caused by the following:

- Poor connectons.
- Mis routed harness.
- Rubbed through wire insulation.
- Broken wire inside the insulation.

Check for the following conditions:

- Poor connection at PCM-Inspect harness connectors for backed out terminals,improper mating,broken locks, improperly formed or damaged terminals,and poor terminal to wire connection.
- Damaged harness-Inspect the wiring harness for damage. If the harness appears to be OK, observe the APP sensor 2, APP sensor 3 display on the Tech 2 while moving connectors and wiring harnesses related to the sensor.

  A change in the display will indicate the location of the fault. If DTC P1272 cannot be duplicated, the information includedin the Faillure Records data can be useful in determined vehicle mileage since the DTC was last set.

  If it is determined that the DTC occurs intermittently, performing the DTC

P1272 Diagnostic Chart may isolate the cause of the fault.

Downloaded from www.Manualslib.com manuals search engine

DTC P1272 – APS 2 – 3 Correlation Error

Step	Action	Value(s)	Yes	No
1	Was the “On-Board (OBD) System Check” performed?	—	Go to *Step 2*	Go to *OBD System Check*
2	Was the “Electric Throttle Control (ETC) System Check” performed?	—	Go to *Step 3*	Go to *ETC System Check*
3	Observe the AP angle reading on the Tech 2 while slowly opening the throttle. Does the AP angle increase steadily and evenly from the closed throttle value to the wide open throttle value?	Idleposition APP sensor 2 =86 ~ 88 % APP sensor 3 =86 ~ 88 % Wide open throttle APP sensor 2 =12 ~ 14 % APP sensor 3 =32 ~ 36 %	Refer to *Diagnostic Aids*	Go to *Step 4*
4	1. Disconnect the AP sensor. 2. Observe the AP sensor reading on the Tech 2. Is the AP sensor reading near the specified value?	0V	Go to *Step 5*	Go to *Step 6*
5	1. Connect a test light between the 5 Voltge supply circuit and the AP sensor signal circuit at the AP2 and AP3 sensor harness connector. 2. Observe the AP sensor reading on the Tech 2. Is the AP sensor reading near the specified value?	5V	Go to *Step 6*	Go to *Step 8*
6	Check the following items; 1. AP2 and AP3 signal circuit for a short to voltage. 2. AP2 and AP3 sensor ground circuit for high resistance between the PCM and the AP sensor. 3. AP2 and AP3 sensor ground circuit for a poor connection. 4. If a problem is found,repair wiring harness as necessary. Was a problem found?	—	Verify repair	Go to *Step 9*
7	Check the following items; 1. AP2 and AP3 signal circuit or 5 volge supply circuit for a poor connection. 2. AP2 and AP3 signal circuit or 5 volge supply circuit for high resistance between the PCM and the AP2 and AP3 sensor. 3. If a problem is found, repair wiring harness as necessary. Was a problem found?	—	Verify repair	Go to *Step 9*
8	Replace the AP sensor. Is the action complete?	—	Verify repair	—

Downloaded from www.Manualslib.com manuals search engine

DTC P1272 – APS 2 – 3 Correlation Error (Cont'd)

Step	Action	Value(s)	Yes	No
9	Replace the PCM. **IMPORTANT:** The replacement PCM must be programmed. Refer to *ON-Vehicle Service in Power Control Module and Sensors for procedures.* And also refer to latest Service Bulletin. Check to see if the latest software is released or not. And then Down Load the LATEST PROGRAMMED SOFTWARE to the replacement PCM. Is the action complete?	—	Verify repair	—

Downloaded from www.Manualslib.com manuals search engine

Diagnostic Trouble Code (DTC) P1273 APS 1 – 3 Correlation Error

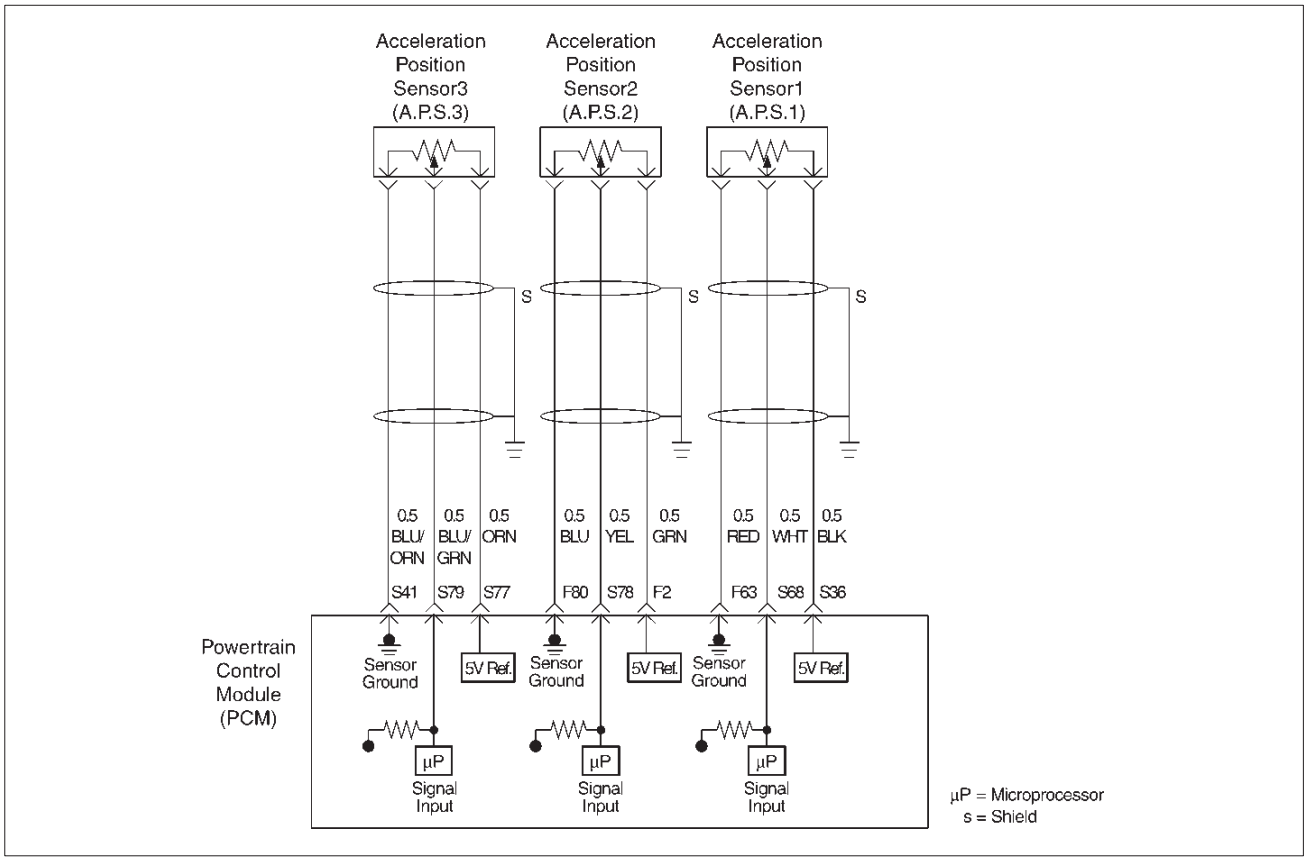

D06RY00075

Circuit Description

- The acceleration position (AP) sensor circuit provides a voltage signal relative to acceleration pedal angle.

  The acceleration pedal angle (AP1) will vary about 13 % at idle position to about 87 % at wide open throttle (WOT).

  This code detects a correlation error between APS1 and APS3.

Conditions for setting the DTC

- The Ignition is “ON”.
- The acceleration pedal angle difference is less than 4.5 % between ASP1 and APS3 for 50 counts within 50 test samples (15.6 m sec).

Action Taken When the DTC Sets

- The PCM will store condition which were present when the DTC was set as Freeze Frame and in the Failure Records data.

Conditions for Clearing the MIL/DTC

- The PCM will turn the MIL “OFF” on the third consecutive trip cycle during which the diagnostic has been run and the fault condition is no longer present.
- A history DTC P1273 will clear after 40 consecutive trip cycle during which the warm up cycles have occurred without a fault.
- DTC P1273 can be cleared using the Tech 2 “Clear Info” function or by disconnecting the PCM battery feed.

Diagnostic Aids

An intermittent may be caused by the following:

- Poor connectons.
- Mis routed harness.
- Rubbed through wire insulation.
- Broken wire inside the insulation.

Check for the following conditions:

- Poor connection at PCM-Inspect harness connectors for backed out terminals, improper mating, broken locks, improperly formed or damaged terminals,and poor terminal to wire connection.
- Damaged harness-Inspect the wiring harness for damage. If the harness appears to be OK,observe the APP sensor 1, APP sensor 3 display on the Tech 2 while moving connectors and wiring harnesses related to the sensor.

  A change in the display will indicate the location of the fault. If DTC P1273 cannot be duplicated,the information included in the Faillure Records data can be useful in determined vehicle mileage since the DTC was last set.

  If it is determined that the DTC occurs intermittently,performing the DTC

P1273 Diagnostic Chart may isolate the cause of the fault.

Downloaded from www.Manualslib.com manuals search engine

DTC P1273 – APS 1 – 3 Correlation Error

Step	Action	Value(s)	Yes	No
1	Was the “On-Board (OBD) System Check” performed?	—	Go to *Step 2*	Go to *OBD System Check*
2	Was the “Electric Throttle Control (ETC) System Check” performed?	—	Go to *Step 3*	Go to *ETC System Check*
3	Observe the AP angle reading on the Tech2 while slowly opening the throttle. Does the AP angle increase steadily and evenly from the closed throttle value to the wide open throttle value?	Idleposition APP sensor 1 =13 % APP sensor 3 =85 ~ 89 % Wide open throttle APP sensor 1 =85 ~ 89 % APP sensor 3 =32 ~ 36 %	Refer to *Diagnostic Aids*	Go to *Step 4*
4	1. Disconnect the AP sensor. 2. Observe the AP sensor reading on the Tech 2. Is the AP sensor reading near the specified value?	0V	Go to *Step 5*	Go to *Step 6*
5	1. Connect a test light between the 5 Voltge supply circuit and the AP sensor signal circuit at the AP1 and AP3 sensor harness connector. 2. Observe the AP sensor reading on the Tech 2. Is the AP sensor reading near the specified value?	5V	Go to *Step 7*	Go to *Step 8*
6	Check the following items; 1. AP1 and AP3 signal circuit for a short to voltage. 2. AP1 and AP3 sensor ground circuit for high resistance between the PCM and the AP sensor. 3. AP1 and AP3 sensor ground circuit for a poor connection. 4. If a problem is found, repair wiring harness as necessary. Was a problem found?	—	Verify repair	Go to *Step 9*
7	Check the following items; 1. AP1 and AP3 signal circuit or 5 volge supply circuit for a poor connection. 2. AP1 and AP3 signal circuit or 5 volge supply circuit for high resistance between the PCM and the AP1 and AP3 sensor. 3. If a problem is found, repair wiring harness as necessary. Was a problem found?	—	Verify repair	Go to *Step 9*
8	Replace the AP sensor. Is the action complete?	—	Verify repair	—

Downloaded from www.Manualslib.com manuals search engine

DTC P1273 – APS 1 – 3 Correlation Error (Cont'd)

Step	Action	Value(s)	Yes	No
9	Replace the PCM. **IMPORTANT:** The replacement PCM must be programmed. Refer to *ON-Vehicle Service in Power Control Module and Sensors for procedures.* And also refer to latest Service Bulletin. Check to see if the latest software is released ornot. And then Down Load the LATEST PROGRAMMED SOFTWARE to the replasement PCM. Is the action complete?	—	Verify repair	—

Downloaded from www.Manualslib.com manuals search engine

Diagnostic Trouble Code (DTC) P1275 APS 1 Circuit Fault

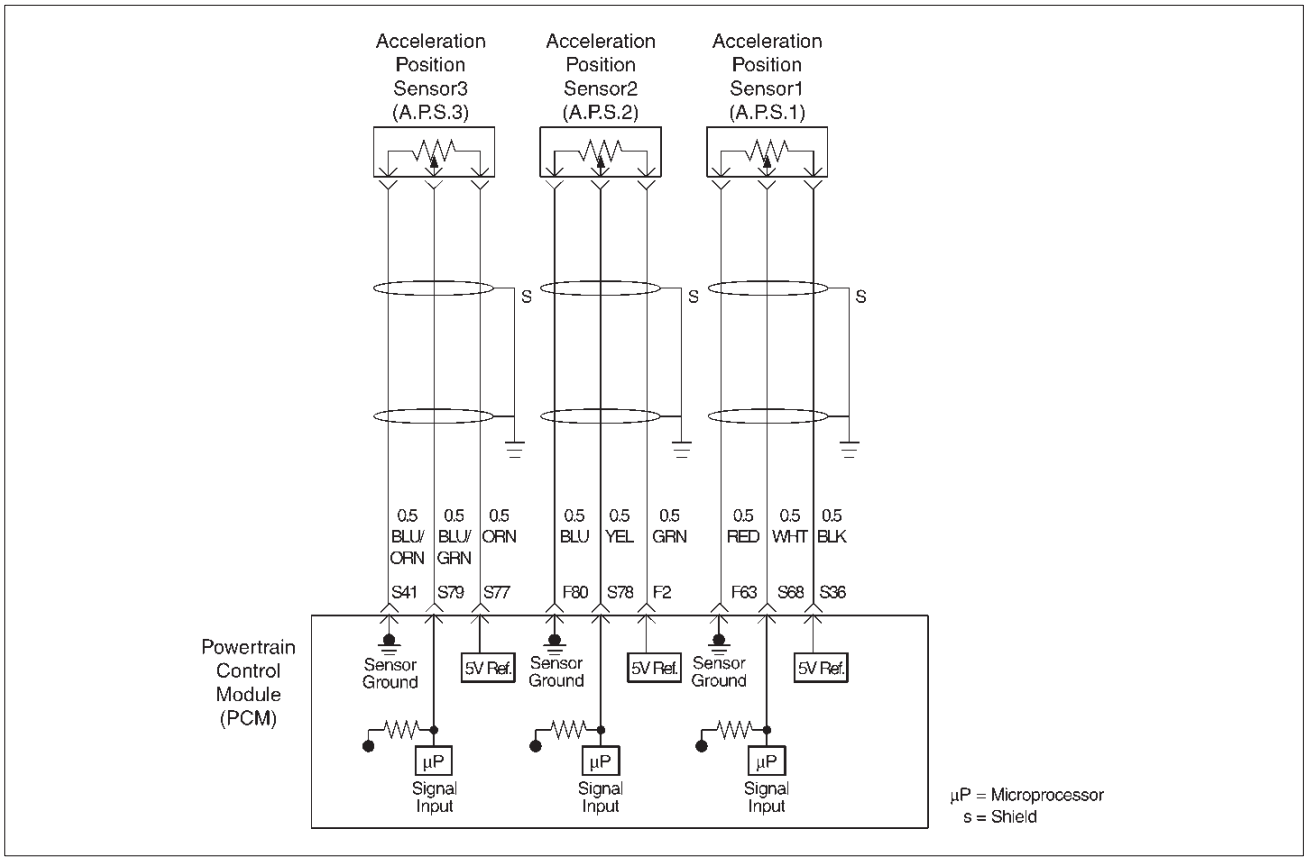

D06RY00075

Circuit Description

- The acceleration position (AP) sensor circuit provides a voltage signal relative to acceleration pedal angle.

  The acceleration pedal angle (AP1) will vary about 13 % at idle position to about 87 % at wide open throttle (WOT).

  This code detects a continuous short to ground or high in either the cicuit or the sensor.

Conditions for setting the DTC

- The Ignition is “ON”.
- The acceleration pedal angle is less than 2.5 % or more than 97 % for 12 counts within 500 test samples (15.6 m sec).

Action Taken When the DTC Sets

- The PCM will store condition which werepresent when the DTC was set as Freeze Frame and in the Failure Records data.

Conditions for Clearing the MIL/DTC

- The PCM will turn the MIL “OFF” on the third consecutive trip cycle during which the diagnostic has been run and the fault condition is no longer present.
- A history DTC P1275 will clear after 40 consecutive trip cycle during which the warm up cycles have occurred without a fault.
- DTC P1275 can be cleared using the Tech 2 “Clear Info” function or by disconnecting the PCM battery feed.

Diagnostic Aids

An intermittent may be caused by the following:

- Poor connectons.
- Mis routed harness.
- Rubbed through wire insulation.
- Broken wire inside the insulation.

Check for the following conditions:

- Poor connection at PCM-Inspect harness connectors for backed out terminals, improper mating, broken locks, improperly formed or damaged terminals,and poor terminal to wire connection.
- Damaged harness-Inspect the wiring harness for damage. If the harness appears to be OK,observe the APP sensor 1 display on the Tech 2 while moving connectors and wiring harnesses related to the sensor.

  A change in the display will indicate the location of the fault. If DTC P1275 cannot be duplicated,the information included in the Faillure Records data can be useful in determined vehicle mileage since the DTC was last set.

  If it is determined that the DTC occurs intermittently, performing the DTC

P1275 Diagnostic Chart may isolate the cause of the fault.

Downloaded from www.Manualslib.com manuals search engine

DTC P1275 – APS 1 Circuit Fault

Step	Action	Value(s)	Yes	No
1	Was the “On-Board (OBD) System Check” performed?	—	Go to *Step 2*	Go to *OBD System Check*
2	Was the “Electric Throttle Control (ETC) System Check” performed?	—	Go to *Step 3*	Go to *ETC System Check*
3	Observe the AP angle reading on the Tech 2 while slowly opening the throttle. Does the AP angle increase steadily and evenly from the closed throttle value to the wide open throttle value?	Idle position =12 ~ 14 % Wide open throttle =86 ~ 88 %	Refer to *Diagnostic Aids*	Go to *Step 4*
4	1. Disconnect the AP sensor. 2. Observe the AP sensor reading on the Tech 2. Is the AP sensor reading near the specified value?	0V	Go to *Step 5*	Go to *Step 6*
5	1. Connect a test light between the 5 Voltge supply circuit and the AP1 sensor signal circuit at the AP sensor harness connector. 2. Observe the AP sensor reading on the Tech 2. Is the AP sensor reading near the specified value?	5V	Go to *Step 7*	Go to *Step 8*
6	Check the following items; 1. AP1 signal circuit for a short to voltage. 2. AP1 sensor ground circuit for high resistance between the PCM and the AP sensor. 3. AP1 sensor ground circuit for a poor connection. 4. If a problem is found,repair wiring harness as necessary. Was a problem found?	—	Verify repair	Go to *Step 9*
7	Check the following items; 1. AP1 signal circuit or 5 volge supply circuit for a poor connection. 2. AP1 signal circuit or 5 volge supply circuit for high resistance between the PCM and the AP1 sensor. 3. If a problem is found, repair wiring harness as necessary. Was a problem found?	—	Verify repair	Go to *Step 9*
8	Replace the AP sensor. Is the action complete?	—	Verify repair	—
9	Replace the PCM. **IMPORTANT:** The replacement PCM must be programmed. Refer to *ON-Vehicle Service in Power Control Module and Sensors for procedures.* And also refer to latest Service Bulletin. Check to see if the latest software is released or not. And then Down Load the LATEST PROGRAMMED SOFTWARE to the replacement PCM. Is the action complete?	—	Verify repair	—

Downloaded from www.Manualslib.com manuals search engine

Diagnostic Trouble Code (DTC) P1280 APS 2 Circuit Fault

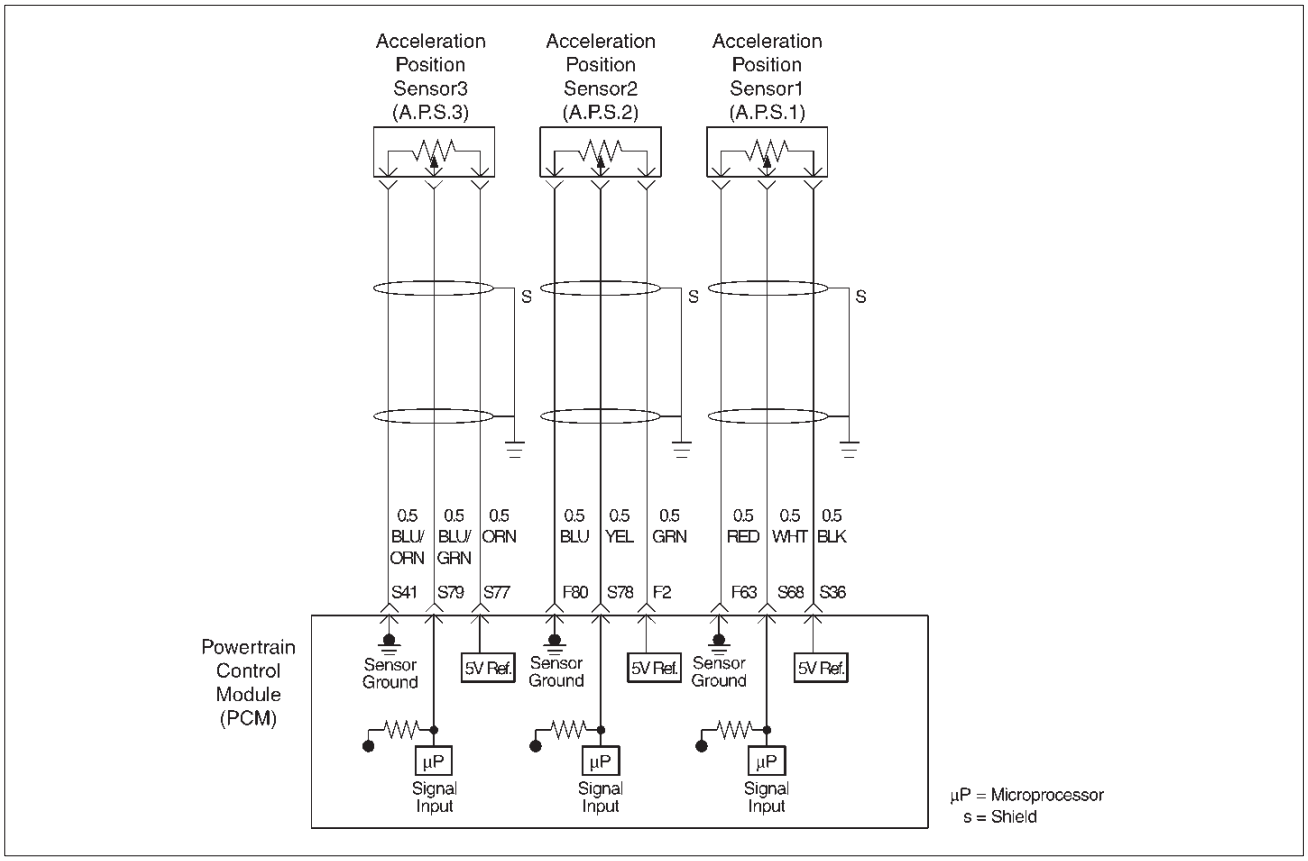

D06RY00075

Circuit Description

- The acceleration position (AP) sensor circuit provides a voltage signal relative to acceleration pedal angle.

  The acceleration pedal angle (AP2) will vary about 87 % at idle position to about 13 % at wide open throttle(WOT).

  This code detects a continuous short to ground or high in either the cicuit or the sensor.

Conditions for setting the DTC

- The Ignition is “ON”.
- The acceleration pedal angle is less than 2.5 % or more than 97 % for 12 counts within 500 test samples (15.6 m sec).

Action Taken When the DTC Sets

- The PCM will store condition which were present when the DTC was set as Freeze Frame and in the Failure Records data.

Conditions for Clearing the MIL/DTC

- The PCM will turn the MIL “OFF” on the third consecutive trip cycle during which the diagnostic has been run and the fault condition is no longer present.
- A history DTC P1280 will clear after 40 consecutive trip cycle during which the warm up cycles have occurred without a fault.
- DTC P1280 can be cleared using the Tech 2 “Clear Info” function or by disconnecting the PCM battery feed.

Diagnostic Aids

An intermittent may be caused by the following:

- Poor connectons.
- Mis routed harness.
- Rubbed through wire insulation.
- Broken wire inside the insulation.

Check for the following conditions:

- Poor connection at PCM-Inspect harness connectors for backed out terminals, improper mating, broken locks, improperly formed or damaged terminals,and poor terminal to wire connection.
- Damaged harness-Inspect the wiring harness for damage. If the harness appears to be OK, observe the APP sensor 2 display on the Tech 2 while moving connectors and wiring harnesses related to the sensor.

  A change in the display will indicate the location of the fault. If DTC P1280 cannot be duplicated, the information included in the Faillure Records data can be useful in determined vehicle mileage since the DTC was last set.

  If it is determined that the DTC occurs intermittently, performing the DTC

P1280 Diagnostic Chart may isolate the cause of the fault.

Downloaded from www.Manualslib.com manuals search engine

DTC P1280 - APS 2 Circuit Fault

Step	Action	Value(s)	Yes	No
1	Was the “On-Board (OBD) System Check” performed?	—	Go to *Step 2*	Go to *OBD System Check*
2	Was the “Electric Throttle Control (ETC) System Check” performed?	—	Go to *Step 3*	Go to *ETC System Check*
3	Observe the AP angle reading on the Tech 2 while slowly opening the throttle. Does the AP angle increase steadily and evenly from the closed throttle value to the wide open throttle value?	Idle position =86 ~ 88 %Wide open throttle =12 ~ 14 %	Refer to *Diagnostic Aids*	Go to *Step 4*
4	1. Disconnect the AP sensor. 2. Observe the AP sensor reading on the Tech 2. Is the AP sensor reading near the specified value?	0V	Go to *Step 5*	Go to *Step 6*
5	1. Connect a test light between the 5 Voltge supply circuit and the AP2 sensor signal circuit at the AP sensor harness connector. 2. Observe the AP sensor reading on the Tech 2. Is the AP sensor reading near the specified value?	5V	Go to *Step 7*	Go to *Step 8*
6	Check the following items; 1. AP2 signal circuit for a short to voltage. 2. AP2 sensor ground circuit for high resistance between the PCM and the AP sensor. 3. AP2 sensor ground circuit for a poor connection. 4. If a problem is found, repair wiring harness as necessary. Was a problem found?	—	Verify repair	Go to *Step 9*
7	Check the following items; 1. AP2 signal circuit or 5 volge supply circuit for a poor connection. 2. AP2 signal circuit or 5 volge supply circuit for high resistance between the PCM and the AP2 sensor. 3. If a problem is found, repair wiring harness as necessary. Was a problem found?	—	Verify repair	Go to *Step 9*
8	Replace the AP sensor. Is the action complete?	—	Verify repair	—
9	Replace the PCM. **IMPORTANT:** The replacement PCM must be programmed.Refer to *ON-Vehicle Service in Power Control Module and Sensors for procedures.* And also refer to latest Service Bulletin. Check to see if the latest software is released or not. And then Down Load the LATEST PROGRAMMED SOFTWARE to the replasement PCM. Is the action complete?	—	Verify repair	—

Downloaded from www.Manualslib.com manuals search engine

Diagnostic Trouble Code (DTC) P1285 APS 3 Circuit Fault

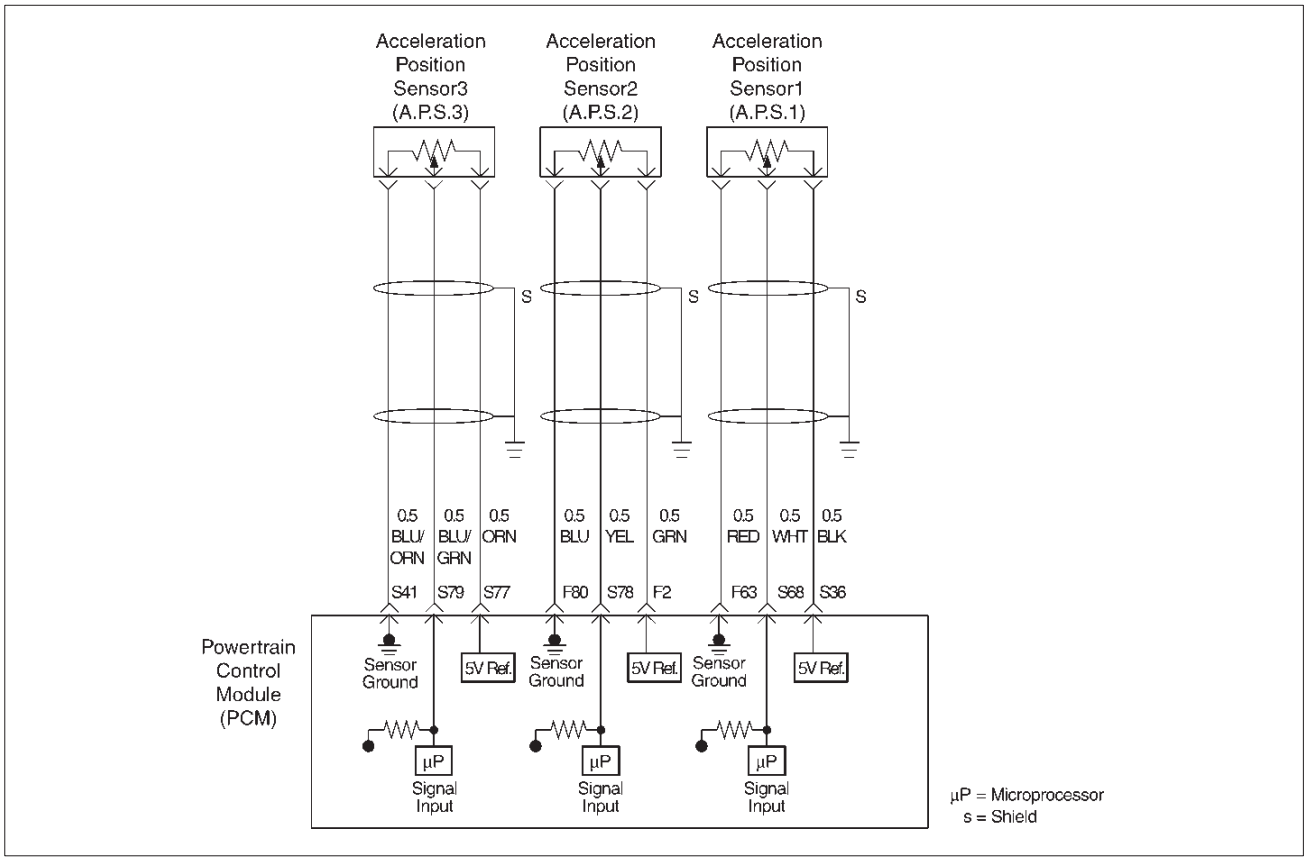

Circuit Description

- The acceleration position (AP) sensor circuit provides a voltage signal relative to acceleration pedal angle.

  The acceleration pedal angle (AP3) will vary about 87 % at idle position to about 34 % at wide open throttle(WOT).

  This code detects a continuous short to ground or high in either the circuit or the sensor.

Conditions for setting the DTC

- The Ignition is “ON”.
- The acceleration pedal angle is less than 2.5 % or more than 97 % for 12 counts within 500 test samples (15.6 m sec).

Action Taken When the DTC Sets

- The PCM will store condition which were present when the DTC was set as Freeze Frame and in the Failure Records data.

Conditions for Clearing the MIL/DTC

- The PCM will turn the MIL “OFF” on the third consecutive trip cycle during which the diagnostic has been run and the fault condition is no longer present.
- A history DTC P1285 will clear after 40 consecutive trip cycle during which the warm up cycles have occurred without a fault.
- DTC P1285 can be cleared using the Tech 2 “Clear Info” function or by disconnecting the PCM battery feed.

Diagnostic Aids

An intermittent may be caused by the following:

- Poor connectons.
- Mis routed harness.
- Rubbed through wire insulation.
- Broken wire inside the insulation.

Check for the following conditions:

- Poor connection at PCM-Inspect harness connectors for backed out terminals, improper mating, broken locks, improperly formed or damaged terminals,and poor terminal to wire connection.
- Damaged harness-Inspect the wiring harness for damage. If the harness appears to be OK, observe the APP sensor 3 display on the Tech 2 while moving connectors and wiring harnesses related to the sensor.

  A change in the display will indicate the location of the fault. If DTC P1285 cannot be duplicated, the information included in the Faillure Records data can be useful in determined vehicle mileage since the DTC was last set.

  If it is determined that the DTC occurs intermittently, performing the DTC

P1285 Diagnostic Chart may isolate the cause of the fault.

Downloaded from www.Manualslib.com manuals search engine

DTC P1285 – APS 3 Circuit Fault

Step	Action	Value(s)	Yes	No
1	Was the “On-Board (OBD) System Check” performed?	—	Go to *Step 2*	Go to *OBD System Check*
2	Was the “Electric Throttle Control (ETC) System Check” performed?	—	Go to *Step 3*	Go to *ETC System Check*
3	Observe the AP angle reading on the Tech 2 while slowly opening the throttle. Does the AP angle increase steadily and evenly from the closed throttle value to the wide open throttle value?	Idle position =86 ~ 88 %Wide open throttle =32 ~ 36 %	Refer to *Diagnostic Aids*	Go to *Step 4*
4	1. Disconnect the AP sensor. 2. Observe the AP sensor reading on the Tech 2. Is the AP sensor reading near the specified value?	0V	Go to *Step 5*	Go to *Step 6*
5	1. Connect a test light between the 5 Voltge supply circuit and the AP3 sensor signal circuit at the AP sensor harness connector. 2. Observe the AP sensor reading on the Tech 2. Is the AP sensor reading near the specified value?	5V	Go to *Step 7*	Go to *Step 8*
6	Check the following items; 1. AP3 signal circuit for a short to voltage. 2. AP3 sensor ground circuit for high resistance between the PCM and the AP sensor. 3. AP3 sensor ground circuit for a poor connection. 4. If a problem is found, repair wiring harness as necessary. Was a problem found?	—	Verify repair	Go to *Step 9*
7	Check the following items; 1. AP3 signal circuit or 5 volge supply circuit for a poor connection. 2. AP3 signal circuit or 5 volge supply circuit for high resistance between the PCM and the AP3 sensor. 3. If a problem is found, repair wiring harness as necessary. Was a problem found?	—	Verify repair	Go to *Step 9*
8	Replace the AP sensor. Is the action complete?	—	Verify repair	—
9	Replace the PCM. **IMPORTANT:** The replacement PCM must be programmed. Refer to *ON-Vehicle Service in Power Control Module and Sensors for procedures.* And also refer to latest Service Bulletin. Check to see if the latest software is released ornot. And then Down Load the LATEST PROGRAMMED SOFTWARE to the replasement PCM. Is the action complete?	—	Verify repair	—

Downloaded from www.Manualslib.com manuals search engine

Diagnostic Trouble Code (DTC) P1290 ETC Forced Idle Mode

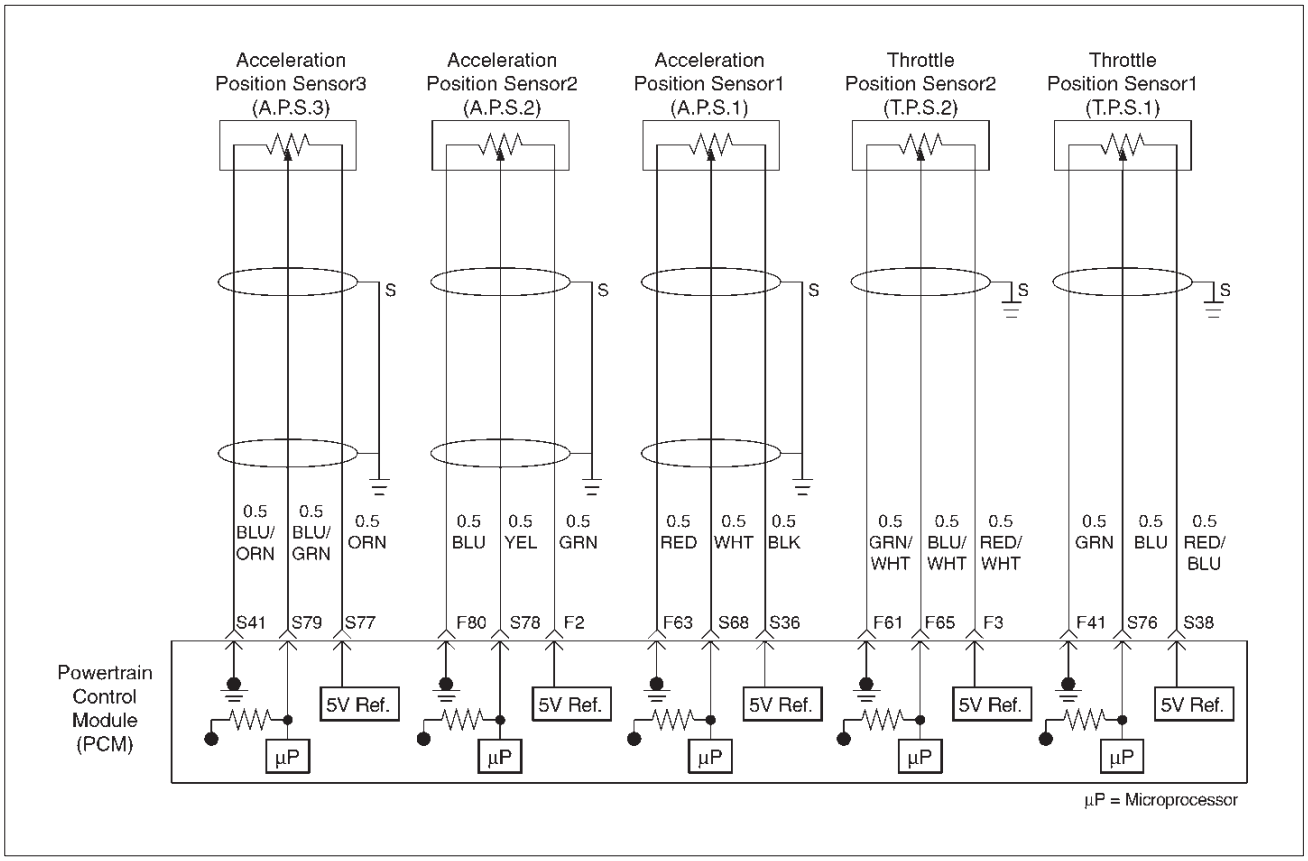

D06RY00157

Circuit Description

- The acceleration position (AP) sensor circuit provides a voltage signal relative to acceleration pedal angle.

  The acceleration pedal angle (AP1) will vary about 13 % at idle position to about 87 % at wide open throttle (WOT).

  This code detects that if the systm is in Forced Idle Mode. (Fail safe Mode)

Conditions for setting the DTC

- The Ignition is “ON”.
- Forced Idle Mode is active. (Fail safe Mode)

Action Taken When the DTC Sets

- The PCM will store condition which were present when the DTC was set as Freeze Frame and in the Failure Records data.

Conditions for Clearing the MIL/DTC

- The PCM will turn the MIL “OFF” on the third consecutive trip cycle during which the diagnostic has been run and the fault condtion is no longer present.
- A history DTC P1290 will clear after 40 cosecutive trip cycle during which the warm up cycles have occurred without a fault.
- DTC P1290 can be cleared using the Tech 2 “Clear Info” function or by disconnecting the PCM battery feed.

Diagnostic Aids

An intermittent may be caused by the following:

- Poor connections.
- Mis routed harness.
- Rubbed through wire insulation.
- Broken wire inside the insulation.

Check for the following conditions:

- Poor connection at PCM-Inspect harness connectors for backed out terminals, improper mating, broken locks, improperly formed or damaged terminals, and poor terminal to wire connection.
- Damaged harness-Inspect the wiring harness for damage. If the harness appears to be OK, observe the APP sensor 1, APP sensor 2, APP sensor 3 display on the Tech 2 while moving connectors and wiring harnesses related to the sensor.

  A change in the display will indicate the location of the fault. If DTC P1290 cannot be duplicated, the information included in the Faillure Records data can be useful in determined vehicle mileage since the DTC was last set.

  If it is determined that the DTC occurs intermittently, performing the DTC

P1290 Diagnostic Chart may isolate the cause of the fault.

Downloaded from www.Manualslib.com manuals search engine

DTC P1290 - ETC Forced Idle Mode

Step	Action	Value(s)	Yes	No
1	Was the “On - Board (OBD) System Check” performed?	—	Go to *Step 2*	Go to *OBD System Check*
2	Was the “Electric Throttle Control (ETC) System Check” performed?	—	Go to *Step 3*	Go to *ETC System Check*
3	Observe the AP angle reading on the Tech2 while slowly opening the throttle. Does the AP angle increase steadily and evenly from the closed throttle value to the wide open throttle value?	Idle position APP sensor 1 =12 ~ 14 % APP sensor 2, 3 =86 ~ 88 % Wide open throttle APP sensor 1 =86 ~ 88 % APP sensor 2 =12 ~ 14 % APP sensor 3 =32 ~ 36 %	Refer to *Diagnostic Aids*	Go to *Step 4*
4	1. Disconnect the AP sensor. 2. Observe the AP sensor reading on the Tech 2. Is the AP sensor reading near the specified value?	0V	Go to *Step 5*	Go to *Step 6*
5	1. Connect a test light between the 5 Voltge supply circuit and the AP1, AP2 and AP3 sensor signal circuit at the AP sensor harness connector. 2. Observe the AP sensor reading on the Tech2. Is the AP sensor reading near the specified value?	5V	Go to *Step 7*	Go to *Step 8*
6	Check the following items; 1. AP1,AP2 and AP3 signal circuit for a short to voltage. 2. AP1, AP2 and AP3 sensor ground circuit for high resistance between the PCM and the AP sensor. 3. AP1, AP2 and AP3 sensor ground circuit for a poor connection. 4. If a problem is found, repair wiring harness as necessary. Was a problem found?	—	Verify repair	Go to *Step 9*
7	Check the following items; 1. AP1, AP2 and AP3 signal circuit or 5 volge supply circuit for a poor connection. 2. AP1, AP2 and AP3 signal circuit or 5 volge supply circuit for high resistance between the PCM and the AP1, AP2 and AP3 sensor. 3. If a problem is found, repair wiring harness as necessary. Was a problem found?	—	Verify repair	Go to *Step 9*

Downloaded from www.Manualslib.com manuals search engine

DTC P1290 - ETC Forced Idle Mode (Cont'd)

Step	Action	Value(s)	Yes	No
8	Replace the AP sensor. Is the action complete?	—	Verify repair	—
9	Replace the PCM. **IMPORTANT:** The replacement PCM must be programmed. Refer to *ON-Vehicle Service in Power Control Module and Sensors for procedures.* And also refer to latest Service Bulletin. Check to see if the latest software is released or not. And then Down Load the LATEST PROGRAMMED SOFTWARE to the replasement PCM. Is the action complete?	—	Verify repair	—

Downloaded from www.Manualslib.com manuals search engine

Diagnostic Trouble Code (DTC) P1295 Power Management Mode

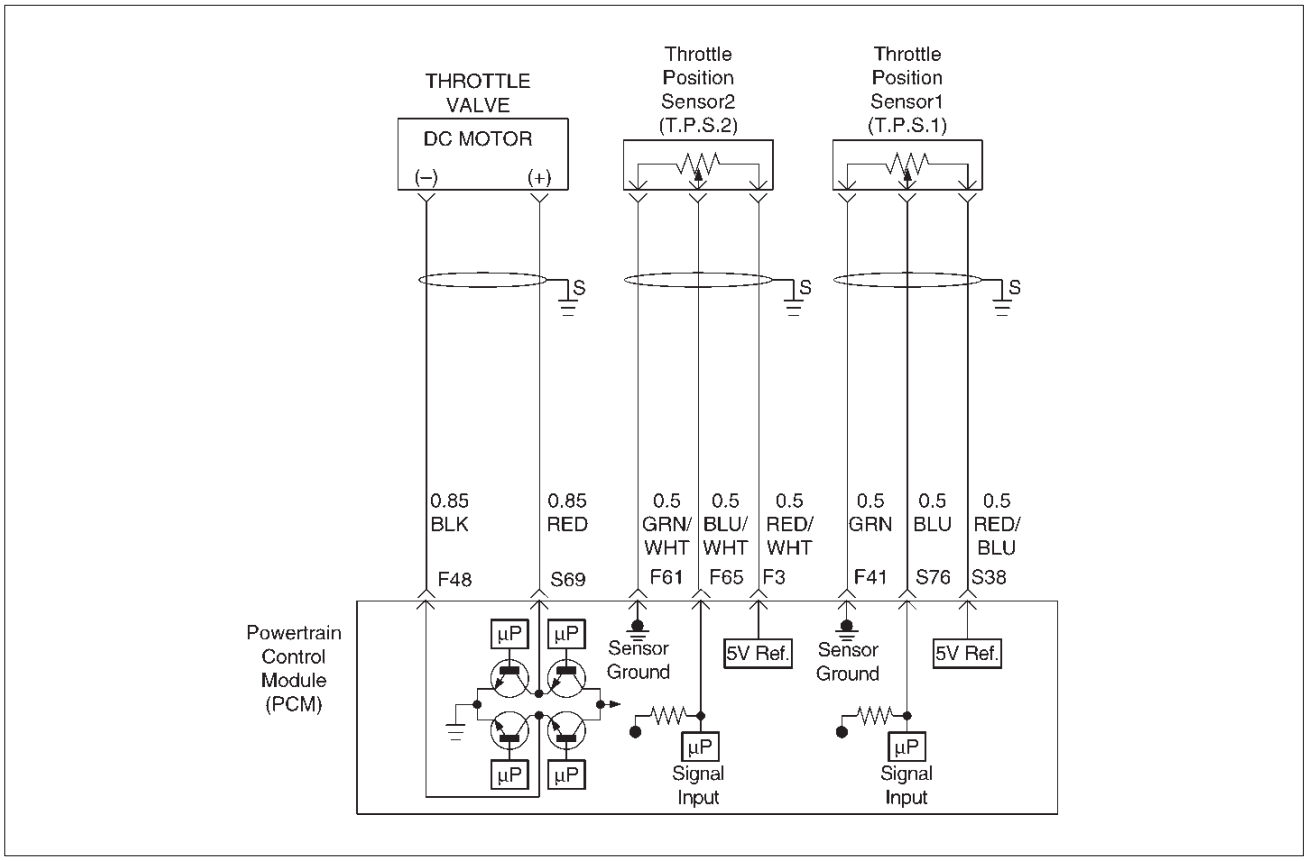

Circuit Description

- The throttle position (TP) sensor circuit provides a voltage signal relative to throttle position (blade angle).

  The throttle blade angle will vary about 8 % at closed throttle to about 92 % at wide open throttle (WOT).
- The DC motor circuit provides a voltage signal relative to command throttle position (blade angle).
- The mass air flow (MAF) sensor measures the amount of air which passes through it into the engine during a given time. The powertrain Control Module (PCM) uses the mass air flow information to monitor engine operating conditions for fuel delivery calculations.

  A large quantitiy of air entering the engine indicates an accleration or high load situation, while a small quantity or air indicates deceleration or idle.

  The MAF sensor produces a frequency signal which can be monitored using a Tech 2. The frequency will vary within a range of around 4 to 7g/s at idle to around 25 to 40g/s at maximum engine load.
- This DTC ditects that if the systm is in PowerManagement Mode.(Fail safe Mode)

Conditions for setting the DTC

- The ignition is “ON”.
- Power Management Mode is active. (Fail safe Mode)

Action Taken When the DTC Sets

- The PCM will illuminate the malfunction indicator lamp (MIL) the first time the fault is detected.
- The PCM calculates an air flow value based on idle air control valve position, throttle position, RPM and barometric pressure.
- The PCM will store condition which were present when the DTC was set as Freeze Frame and in the Failure Records data.

Conditions for Clearing the MIL/DTC

- The PCM will turn the MIL “OFF” on the third consecutive trip cycle during which the diagnostic has been run and the fault condtion is no longer present.
- A history DTC P1295 will clear after 40 cosecutive trip cycle during which the warm up cycles have occurred without a fault.
- DTC P1295 can be cleared using the Tech 2 “Clear Info” function or by disconnecting the PCM battery feed.

Diagnostic Aids

An intermittent may be caused by the following:

- Poor connectons.
- Mis routed harness.
- Rubbed through wire insulation.
- Broken wire inside the insulation.

Check for the following conditions:

- Poor connection at PCM-Inspect harness connectors for backed out terminals, improper mating, broken

Downloaded from www.Manualslib.com manuals search engine

locks, improperly formed or damaged terminals,and poor terminal to wire connection.

- Damaged harness-Inspect the wiring harness for damage. If the harness appears to be OK, observe the TP sensor 1, TP sensor 2 display on the Tech 2 while moving connectors and wiring harnesses related to the sensor.

  A change in the display will indicate the location of the fault.If DTC P1295 cannot be duplicated, the information included in the Faillure Records data can be useful in determined vehicle mileage since the DTC was last set.

  If it is determined that the DTC occurs intermittently, performing the DTC

P1295 Diagnostic Chart may isolate the cause of the fault.

DTC P1295 - Power Management Mode

Step	Action	Value(s)	Yes	No
1	Was the “On-Board (OBD) System Check” performed?	—	Go to *Step 2*	Go to *OBD System Check*
2	Was the “Electric Throttle Control (ETC) System Check” performed?	—	Go to *Step 3*	Go to *ETC System Check*
3	1. Ignition “ON,” engine “OFF.” 2. Review and record Tech 2 Failure Records data. 3. Operate the vehicle within Failure Records conditions as noted. 4. Using a Tech 2, monitor “DTC” info for DTC P1295. Does the Tech 2 indicate DTC P1295 failed this ignition?	—	Go to *Step 4*	Refer to *Diagnostic Aids*
4	Observe the TP angle reading on the Tech 2 while slowly opening the throttle. Does the TP angle increase steadily and evenly from the closed throttle value to the wide open throttle value?	Closed throttle TP sensor 1 =8 ~ 10 % TP sensor 2 =90 ~ 99 % Wide open throttle TP sensor 1 =90 ~ 92 % TP sensor 2 =8 ~ 10 %	Go to *Step 9*	Go to *Step 5*
5	1. Ignition “OFF.” 2. Disconnect the DC motor. Is the DC motor reading near the specified value?	0.3 ~ 100 μ	Go to *Step 6*	Go to *Step 8*
6	Check the DC motor harness between the PCM and DC Motor circuit at the DC motor harness connector. Was a problem found?	—	Verify repair	Go to *Step 7*
7	Check the throttle valve assembly. Was a problem found?		Verify repair	Go to *Step 8*
8	Replace the DC motor. (Replace the Throttle valve assembly) Is the action complete?	—	Verify repair	Go to *Step 7*
9	1. Disconnect the TP sensor. 2. Observe the TP sensor reading on the Tech 2. Is the TP sensor reading near the specified value?	0V	Go to *Step 10*	Go to *Step 11*

Downloaded from www.Manualslib.com manuals search engine

DTC P1295 - Power Management Mode (Cont'd)

Step	Action	Value(s)	Yes	No
10	1. Connect a test light between the 5Volt reference "A"circuit and the TP1 and TP2 sensor signal circuit at the TP sensor harness connector. 2. Observe the TP sensor reading on the Tech 2. Is the TP sensor reading near the specified value?	5V	Go to *Step 13*	Go to *Step 12*
11	Check the following items; 1. TP1 and TP2 signal circuit for a short to voltage. 2. TP1 and TP2 sensor ground circuit for high resistance between the PCM and the TP sensor. 3. TP1and TP2 sensor ground circuit for a poor connection. 4. If a problem is found, repair wiring harness as necessary. Was a problem found?	—	Verify repair	Go to *Step 14*
12	Check the following items; 1. TP1and TP2 signal circuit or 5 volt reference circuit for a poor connection. 2. TP1 and TP2 signal circuit or 5 volt reference circuit for high resistance between the PCM and the TP1and TP2 sensor. 3. If a problem is found, repair wiring harness as necessary. Was a problem found?	—	Verify repair	Go to *Step 14*
13	Replace the TP sensor. Is the action complete?	—	Verify repair	—
14	1. Start the engine. 2. With the engine idling, monitor "MAF Frequency" display on the Tech 2. Is the "MAF Frequency" below the specified value?	6 ~ 10 g/s	Go to *Step 15*	Go to *Step 18*
15	1. Ignition "OFF." 2. Disconnect the MAF sensor connector. 3. Ignition "ON," engine idling. 4. Using a Tech 2, monitor "MAF Frequency." Does the Tech 2 indicate a "MAF Frequency" at the specified value?	0g/s	Go to *Step 16*	Go to *Step 17*
16	Replace the MAF sensor. Is the action complete?	—	Verify repair	Go to *Step 19*
17	1. Check the MAF harness for incorrect routing near high voltage components (solenoids, relays, motors). 2. If incorrect routing is found, correct the harness routing. Was a problem found?	—	Verify repair	Go to *Step 17*
18	1. With the engine idling, monitor "MAF Frequency." display on the Tech 2. 2. Quickly snap open throttle to wide open throttle while under a road load and record value. Does the Tech 2 indicate a "MAF Frequency" at thespecified value?	6 ~ 10 g/s	Go to *Step 16*	Go to *Step 19*

Downloaded from www.Manualslib.com manuals search engine

DTC P1295 - Power Management Mode (Cont'd)

Step	Action	Value(s)	Yes	No
19	1. Ignition "ON",engine not running. 2. Observe the MAP reading on the Tech 2. Is the MAP reading less than the specified value?	65kPa	Go to *Step 20*	Go to *Step 23*
20	1. Disconnect the MAP sensor. 2. Connect a test 5 volt reference circuit and the MAP signal at the MAP sensor harness connector. 3. Observe the MAP reading on the Tech 2. Is the MAP reading less than the specified value? (If no, start with diagnosis chart forother sensors in the circuit and see if 5V returns.)	—	Go to *Step 22*	Go to *Step 21*
21	1. Check the MAP signal circuit between the PCM and MAP grund circuit. 2. If the MAP signal circuit is open or shoted, repair it as necessary. Was the MAP signal circuit open or shorted?	—	Verify repair	Go to *Step 23*
22	Replace the MAP sensor. Is the action complete?	—	Verify repair	—
23	Replace the PCM. **IMPORTANT:** The replacement PCM must be programmed. Refer to *ON-Vehicle Service in Power Control Module and Sensors for procedures.* And also refer to latest Service Bulletin.Check to see if the latest software is released or not. And then Down Load the LATEST PROGRAMMED SOFTWARE to the replasement PCM. Is the action complete?	—	Verify repair	—

Downloaded from www.Manualslib.com manuals search engine

Diagnostic Trouble Code (DTC) P1299 ETC Forced Engine Shutdown Mode

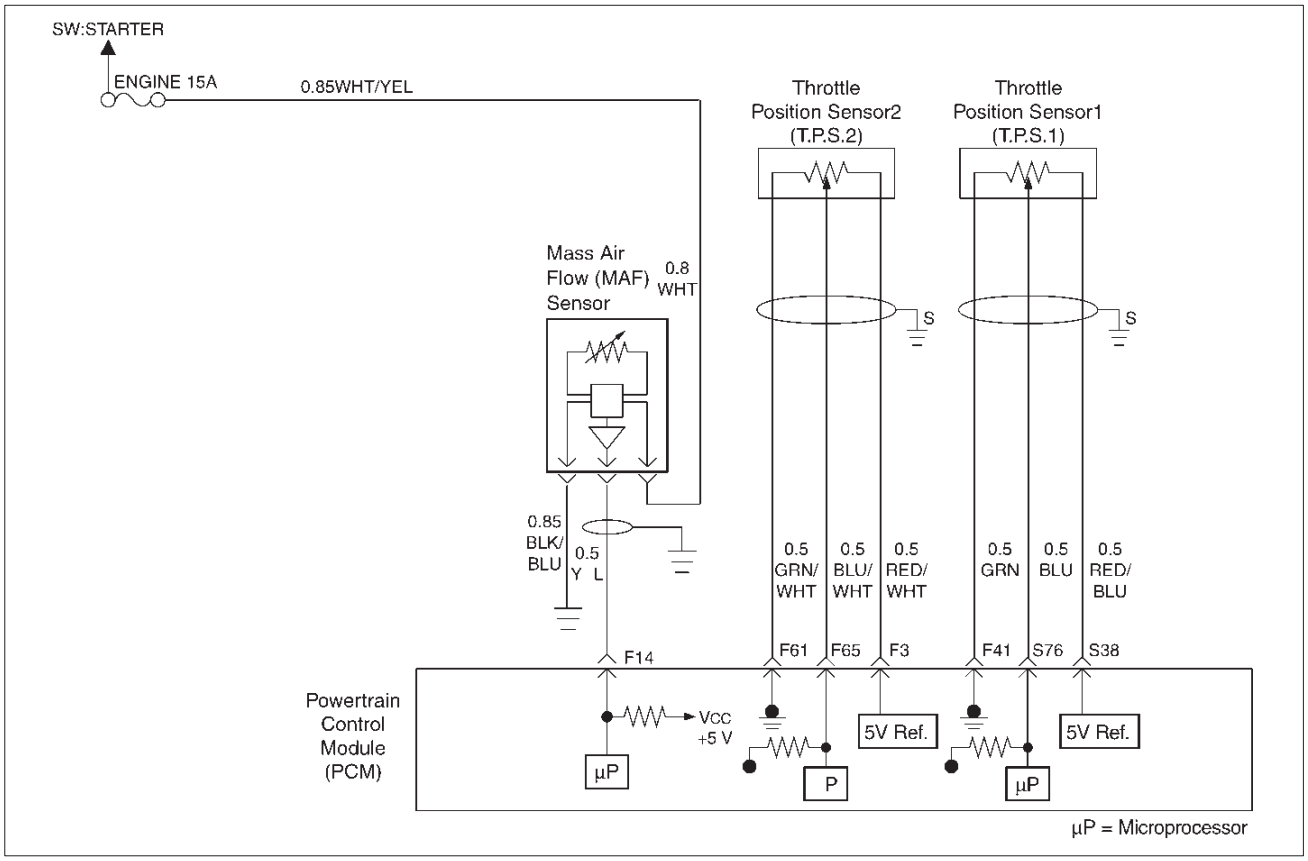

D06RY00090

Circuit Description

- The throttle position (TP) sensor circuit provides a voltage signal relative to throttle position (blade angle).

  The throttle blade angle will vary about 8% at closed throttle to about 92% at wide open throttle(WOT).
- The DC motor circuit provides a voltage signal relative to command throttle position (blade angle).
- The mass air flow (MAF) sensor measures the amount of air which passes through it into the engine during a given time. The powertrain Control Module (PCM) uses the mass air flow information to monitor engine operating conditions for fuel delivery calculations. A laege quantitiy of air entering the engine indicates an accleration or high load situation, while a small quantity or air indicates deceleration or idle.

  The MAF sensor produces a frequency signal which can be monitored using a Tech 2. The frequency will vary within a range of around 4 to 7g/s at idle to around 25 to 40g/s at maximum engine load.
- This DTC ditects if the system is in ECT Forced Engine Shutdown Mode.(Fail safe Mode)

Conditions for setting the DTC

- The ignition is “ON”.
- ECT Forced Engine Shutdown Mode is active. (Fail safe Mode)

Action Taken When the DTC Sets

- The PCM will store condition which were present when the DTC was set as Freeze Frame and in the Failure Records data.

Conditions for Clearing the MIL/DTC

- The PCM will turn the MIL “OFF” on the third consecutive trip cycle during which the diagnostic has been run and the fault condtion is no longer present.
- A history DTC P1299 will clear after 40 cosecutive trip cycle during which the warm up cycles have occurred without a fault.
- DTC P1299 can be cleared using the Tech 2 “Clear Info” function or by disconnecting the PCM battery feed.

Diagnostic Aids

An intermittent may be caused by the following:

- Poor connections.
- Mis routed harness.
- Rubbed through wire insulation.
- Broken wire inside the insulation.

Check for the following conditions:

- Poor connection at PCM-Inspect harness connectors for backed out terminals, improper mating, broken locks, improperly formed or damaged terminals,and poor terminal to wire connection.
- Damaged harness-Inspect the wiring harness for damage. If the harness appears to be OK, observe the TP sensor 1, TP sensor 2 display on the Tech 2 while

Downloaded from www.Manualslib.com manuals search engine

moving connectors and wiring harnesses related to the sensor.

A change in the display will indicate the location of the fault. If DTC P1299 cannot be duplicated, the information included in the Faillure Records data can be useful in determined vehicle mileage since the DTC was last set.

If it is determined that the DTC occurs intermittently, performing the DTC P1299 Diagnostic Chart may isolate the cause of the fault.

DTC P1299 - ETC Forced Engine Shutdown Mode

Step	Action	Value(s)	Yes	No
1	Was the “On-Board (OBD) System Check” performed?	—	Go to *Step 2*	Go to *OBD System Check*
2	Was the “Electric Throttle Control (ETC) System Check” performed?	—	Go to *Step 3*	Go to *ETC System Check*
3	Observe the TP angle reading on the Tech 2 while slowly opening the throttle. Does the TP angle increase steadily and evenly from the closed throttle value to the wide open throttle value?	Closed throttle TP sensor 1 =8 ~ 10 % TP sensor 2 =90 ~ 92 % Wide open throttle TP sensor 1 =90 ~ 92 % TP sensor 2 =8 ~ 10 %	Go to *Step 8*	Go to *Step 4*
4	1. Ignition “OFF.” 2. Disconnect the DC motor. Is the DC motor reading near the specified value?	0.3 ~ 100μ	Go to *Step 5*	Go to *Step 7*
5	Check the DC motor harness between the PCM and DC Motor circuit at the DC motor harness connector. Was a problem found?	—	Verify repair	Go to *Step 6*
6	Check the throttle valve assembly. Was a problem found?		Verify repair	Go to *Step 7*
7	Replace the DC motor. (Replace the Throttle valve assembly) Is the action complete?	—	Verify repair	Go to *Step 8*
8	1. Disconnect the TP sensor. 2. Observe the TP sensor reading on the Tech 2. Is the TP sensor reading near the specified value?	0V	Go to *Step 9*	Go to *Step 10*
9	1. Connect a test light between the 5Volt reference circuit and the TP1 and TP2 sensor signal circuit at the TP sensor harness connector. 2. .Observe the TP sensor reading on the Tech 2. Is the TP sensor reading near the specified value?	5V	Go to *Step 12*	Go to *Step 11*

Downloaded from www.Manualslib.com manuals search engine

DTC P1299 - ETC Forced Engine Shutdown Mode (Cont'd)

Step	Action	Value(s)	Yes	No
10	Check the following items; 1. TP1 and TP2 signal circuit for a short to voltage. 2. TP1 and TP2 sensor ground circuit for high resistance between the PCM and the TP sensor. 3. TP1and TP2 sensor ground circuit for a poor connection. 4. If a problem is found, repair wiring harness as necessary. Was a problem found?	—	Verify repair	Go to *Step 13*
11	Check the following items; 1. TP1and TP2 signal circuit or 5 volt reference circuit for a poor connection. 2. TP1 and TP2 signal circuit or 5 volt reference circuit for high resistance between the PCM and the TP1and TP2 sensor. 3. If a problem is found,repair wiring harness as necessary. Was a problem found?	—	Verify repair	Go to *Step 13*
12	Replace the TP sensor. Is the action complete?	—	Verify repair	—
13	1. Start the engine. 2. With the engine idling, monitor "MAF Frequency" display on the Tech 2. Is the "MAF Frequency" below the specified value?	6 ~ 10 g/s	Go to *Step 16*	Go to *Step 17*
14	1. Ignition "OFF." 2. Disconnect the MAF sensor connector. 3. Ignition "ON," engine idling. 4. Using a Tech 2, monitor "MAF Frequency." Does the Tech 2 indicate a "MAF Frequency" at the specified value?	0g/s	Go to *Step 15*	Go to *Step 16*
15	Replace the MAF sensor. Is the action complete?	—	Verify repair	Go to *Step 18*
16	1. Check the MAF harness for incorrect routing near high voltage components (solenoids, relays, motors). 2. If incorrect routing is found, correct the harness routing. Was a problem found?	—	Verify repair	Go to *Step 16*
17	1. With the engine idling, monitor "MAF Frequency." display on the Tech 2. 2. Quickly snap open throttle to wide open throttle while under a road load and record value. Does the Tech 2 indicate a "MAF Frequency" at the specified value?	6 ~ 10 g/s	Go to *Step 15*	Go to *Step 18*
18	1. Ignition "ON",engine not running. 2. Observe the MAP reading on the Tech 2. Is the MAP reading less than the specified value?	65kPa	Go to *Step 19*	Go to *Step 22*

Downloaded from www.Manualslib.com manuals search engine

DTC P1299 - ETC Forced Engine Shutdown Mode (Cont'd)

Step	Action	Value(s)	Yes	No
19	1. Disconnect the MAP sensor. 2. Connect a test 5 volt reference "A" circuit and the MAP signal at the MAP sensor harness connector. 3. Observe the MAP reading on the Tech 2. Is the MAP reading less than the specified value?(If no, start with diagnosis chart for other sensors in the circuit and see if 5Vreturns.)	—	Go to *Step 21*	Go to *Step 20*
20	1. Check the MAP signal circuit between the PCM and MAP ground circuit. 2. If the MAP signal circuit is open or shorted ,repair it as necessary. Was the MAP signal circuit open or shorted?	—	Verify repair	Go to *Step 22*
21	Replace the MAP sensor. Is the action complete?	—	Verify repair	—
22	Replace the PCM. **IMPORTANT:** The replacement PCM must be programmed. Refer to *ON-Vehicle Service in Power Control Module and Sensors for procedures.* And also refer to latest Service Bulletin. Check to see if the latest software is released or not. And then Down Load the LATEST PROGRAMMED SOFTWARE to the replacement PCM. Is the action complete?	—	Verify repair	—

Downloaded from www.Manualslib.com manuals search engine

Diagnostic Trouble Code (DTC) P1310 ION Sensing Module Diagnosis

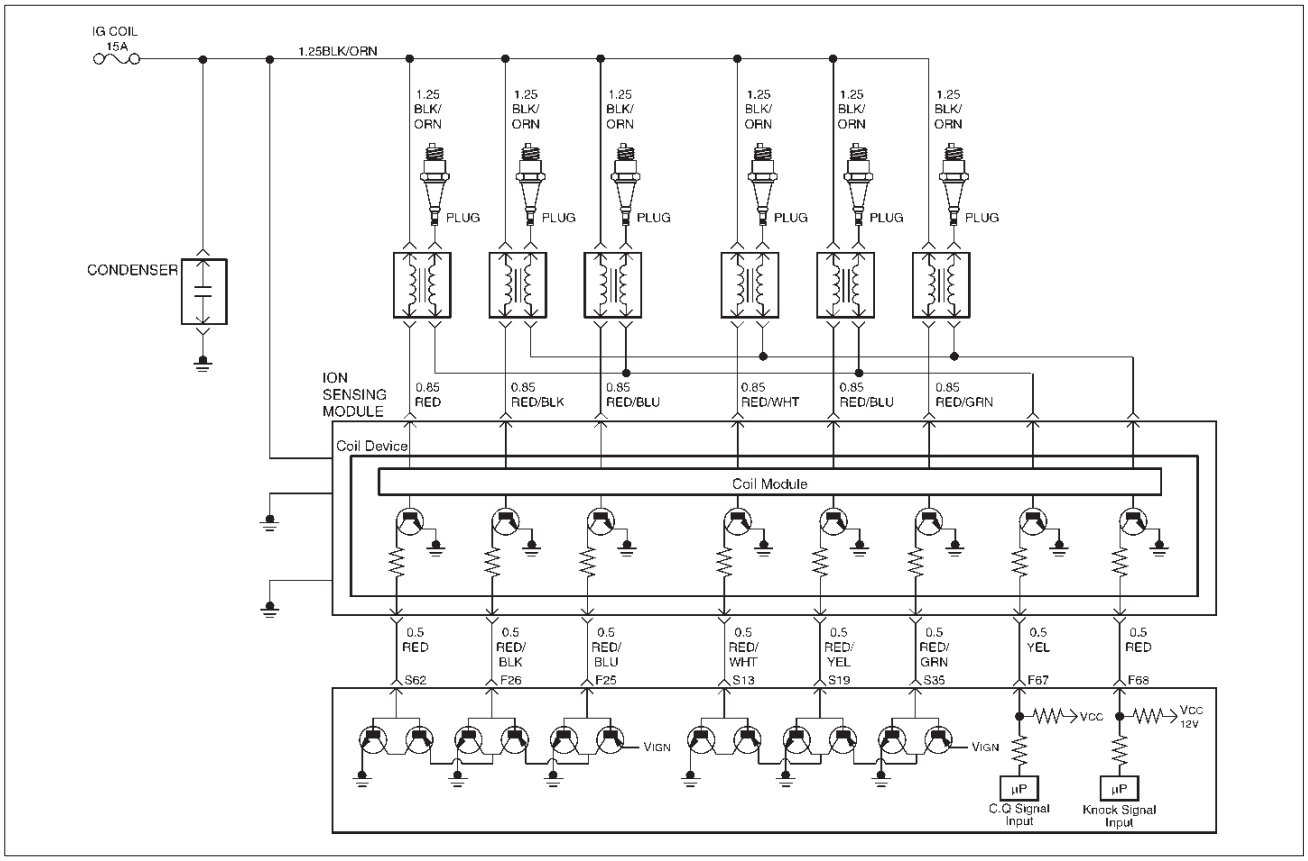

D06RY00067

Circuit Description

The Power Control Module (PCM) checks the validity of the signals used in the ION Sensing module at the following engine operating conditions.

- The Deceleration Fuel Cut Off (DFCO) test is performed to evaluate the Combustion Quality (CQ) signal pulse width if it is below a predetermined value, the value it is expected to be during DFCO conditions. If the CQ signal pilse width is above the predetermined threshold, the fail counter will be incremented. If the failure counter exceeds the calibration, then the test is conplete and a failure will be reported.
- The Power Enrichment (PE) test is performed to evaluate the Combustion Quality (CQ) signal pulse width if it is below a predetermined value, the value it is expected to be during PE conditions.

  If the CQ signal pulse width is above the predetermined threshold, the fail counter will be incremented. If the failure counter exceeds the calibration, then the test is complete and a failure will be reported.
- The Combustion Quality (CQ) test is performed to check if inappropriate (CQ) signal status were detected. If missing CQ pulses or multiple CQ pulses or CQ pulse width calculation errors were detected, the fail counter will be incremented. If the failure counter exceeds the calibration, then the test is complete and a failure will be reported.

Conditions for setting the DTC

- Ignition voltage is between 10volt and 16 volts.
- MAP sensor signal is between 26kPa and 100 kPa.
- Fuel level is more than 10%.
- Engine speed is between 650rpm and 6500rpm.
- No Crank DTCs set.
- No System voltage DTCs set.

Action Taken When the DTC Sets

- The PCM will illuminate the malfunction indicator lamp (MIL) the first time the fault is detected.
- The PCM calculates an air flow value based on idle air control valve position, throttle position, RPM and barometric pressure.
- The PCM will store condition which were present when the DTC was set as Freeze Frame and in the Failure Records data.

Conditions for Clearing the MIL/DTC

- The PCM will turn the MIL “OFF” on the third consecutive trip cycle during which the diagnostic has been run and the fault condtion is no longer present.
- A history DTC P1310 will clear after 40 cosecutive trip cycle during which the warm up cycles have occurred without a fault.
- DTC P1310 can be cleared using the Tech 2 “Clear Info” function or by disconnecting the PCM battery feed.

Diagnostic Aids

An intermittent may be caused by the following:

- Poor connections.

Downloaded from www.Manualslib.com manuals search engine

- Mis routed harness.
- Rubbed through wire insulation.
- Broken wire inside the insulation.

Check for the following conditions:

- Poor connection at PCM-Inspect harness connectors for backed out terminals, improper mating, broken locks, improperly formed or damaged terminals, and poor terminal to wire connection.
- Damaged harness-Inspect the wiring harness for damage. If the harness appears to be OK, observe the moving connectors and wiring harnesses related to the sensor.

  A change in the display will indicate the location of the fault. If DTC P1310 cannot be duplicated, the information included in the Failure Records data can be useful in determined vehicle mileage since the DTC was last set.

  If it is determined that the DTC occurs intermittently, performing the DTC P1310 Diagnostic Chart may isolate the cause of the fault.

Downloaded from www.Manualslib.com manuals search engine

DTC P1310 - ION Sensing Module Diagnostic

Step	Action	Value(s)	Yes	No
1	Was the “On-Board (OBD) System Check” performed?	—	Go to *Step 2*	Go to *OBD System Check*
2	1. Ignition “ON,” engine “OFF.” 2. Review and record Tech 2 Failure Records data. 3. Operate the vehicle within Failure Records conditions as noted. 4. Using a Tech 2, monitor “DTC” info for DTC P1310. Does the Tech 2 indicate DTC P1310 failed this ignition?	—	Go to *Step 3*	Refer to *Diagnostic Aids*
3	1. Ignition “OFF.” 2. Disconnect the ION Sensing module. 3. Disconnect the PCM. Is the action complete?	—	Go to *Step 4*	Go to *Step 3*
4	Check the ION Sensing harness between the PCM and ION Sensing module circuit harness connector. Was a problem found?	—	Verify repair	Go to *Step 6*
5	1. Disconnect the ignition coil. Is the action complete?	—	Go to *Step 6*	Go to *Step 5*
6	Check the ION Sensing harness between the ignition coil and ION Sensing module circuit at the ION Sensing Module harness connector. Was a problem found?	—	Verify repair	Go to *Step 7*
7	Check the following items; 1. Ignition coil and ignition coil circuit. 2. Ignition coil ground circuit for a poor connection. 3. If a problem is found, repair wiring harness as necessary. Was a problem found?	—	Verify repair	Go to *Step 8*
8	Replace the Ignition coil. Is the action complete?	—	Verify repair	Go to *Step 9*
9	Check the following items; 1. ION Sensing module ground circuit for a poor connection. 2. If a problem is found, repair wiring harness as necessary. Was a problem found?	—	Go to *Step 10*	Go to *Step 11*
10	Replace the ION Sensing module. Is the action complete?	—	Verify repair	Go to *Step 10*

Downloaded from www.Manualslib.com manuals search engine

DTC P1310 - ION Sensing Module Diagnostic (Cont'd)

Step	Action	Value(s)	Yes	No
11	Replace the PCM. **IMPORTANT:** The replacement PCM must be programmed. Refer to *ON-Vehicle Service in Power Control Module and Sensors for procedures.* And also refer to latest Service Bulletin. Check to see if the latest software is released or not. And then Down Load the LATEST PROGRAMMED SOFTWARE to the replacement PCM. Is the action complete?	—	Verify repair	—

Downloaded from www.Manualslib.com manuals search engine

Diagnostic Trouble Code (DTC)
P1311 ION Sensing Module SEC line 1 Circuit Fault

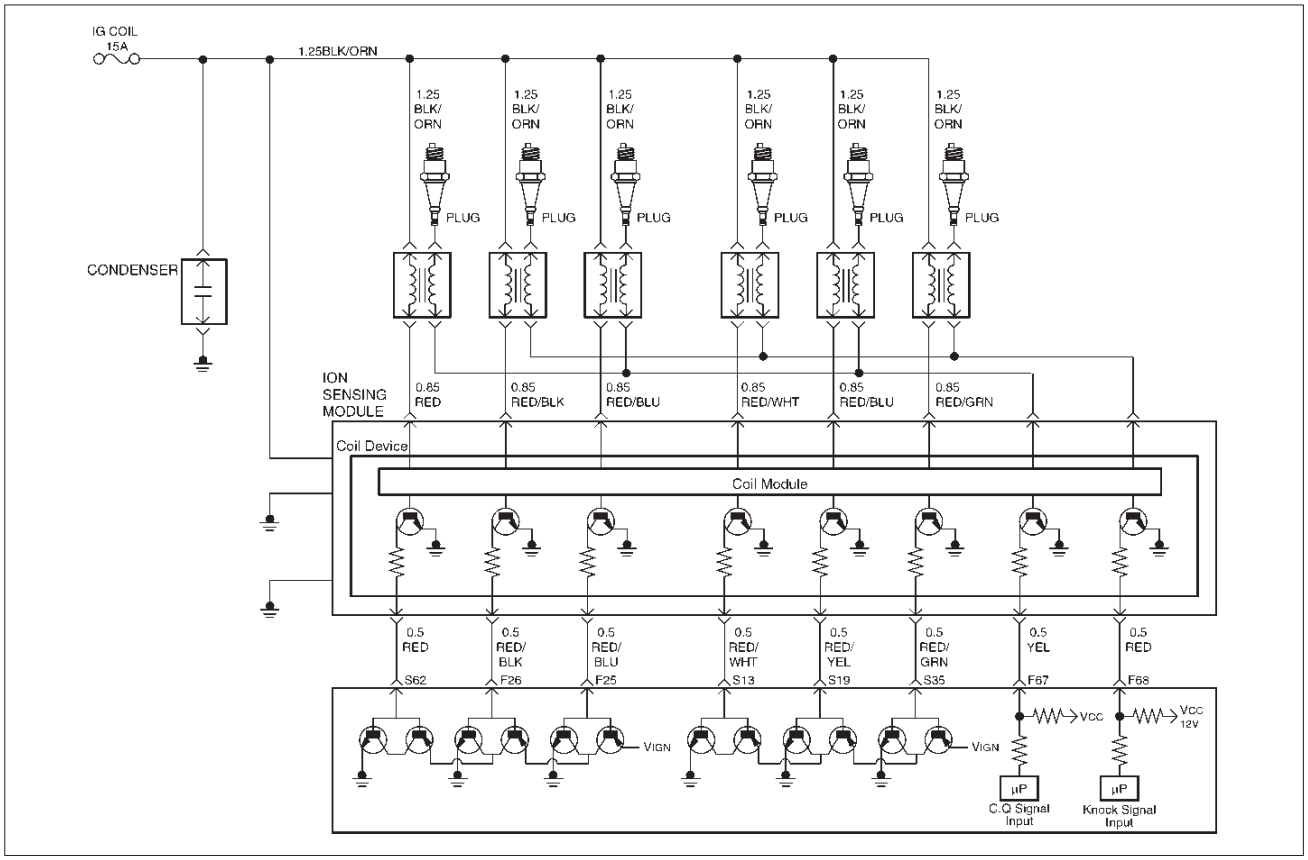

D06RY00067

Circuit Description

- The Power Control Module (PCM) will compara the secondary current reading to a predetermined maximum and minimum thresholds.

  If the secondary current signal pulse width is out of the predetermined renge, the fail counter will be incremented. If the failure counter exceeds the calibration, then the PCM is complete and a failure will be reported. If the sample counter threshold is reached before the failure threshold, then the PCM is complete and pass will be reported.

  This PCM will detect an open/short circuit in the secondary current sense input circuit, misfire on the entire bank for the secondary current sense input circuit, coil failure, and same internal Ignition Current Sense System (ICSS) module faults.

Conditions for setting the DTC

- Ignition voltage is between 10volt and 16 volts.
- MAP sensor signal is between 26kPa and 100 kPa.
- Fuel level is more than 10%.
- Engine speed is between 650rpm and 6500rpm.
- ION Sensing Module circuit is open or shorted signals on the SEC 1 line.

Action Taken When the DTC Sets

- The PCM will illuminate the malfunction indicator lamp (MIL) the first time the fault is detected.
- The PCM calculates an air flow value based on idle air control valve position, throttle position, RPM and barometric pressure.
- The PCM will store condition which were present when the DTC was set as Freeze Frame and in the Failure Records data.

Conditions for Clearing the MIL/DTC

- The PCM will turn the MIL “OFF” on the third consecutive trip cycle during which the diagnostic has been run and the fault condition is no longer present.
- A history DTC P1311 will clear after 40 cosecutive trip cycle during which the warm up cycles have occurred without a fault.
- DTC P1311 can be cleared using the Tech 2 “Clear Info” function or by disconnecting the PCM battery feed.

Diagnostic Aids

An intermittent may be caused by the following:

- Poor connections.
- Mis routed harness.
- Rubbed through wire insulation.
- Broken wire inside the insulation.

Check for the following conditions:

Downloaded from www.Manualslib.com manuals search engine

- Poor connection at PCM-Inspect harness connectors for backed out terminals, improper mating, broken locks, improperly formed or damaged terminals, and poor terminal to wire connection.
- Damaged harness-Inspect the wiring harness for damage. If the harness appears to be OK, observe the moving connectors and wiring harnesses related to the sensor.
- A change in the display will indicate the location of the fault. If DTC P1311 cannot be duplicated, the information included in the Failure Records data can be useful in determined vehicle mileage since the DTC was last set.
- If it is determined that the DTC occurs intermittently, performing the DTC P1311 Diagnostic Chart may isolate the cause of the fault.

DTC P1311 - ION Sensing Module SEC line 1 Circuit Fault

Step	Action	Value(s)	Yes	No
1	Was the “On-Board (OBD) System Check” performed?	—	Go to *Step 2*	Go to *OBD System Check*
2	1. Ignition “ON,” engine “OFF.” 2. Review and record Tech 2 Failure Records data. 3. Operate the vehicle within Failure Records conditions as noted. 4. Using a Tech 2, monitor “DTC” info for DTC P1311. Does the Tech 2 indicate DTC P1311 failed this ignition?	—	Go to *Step 3*	Refer to *Diagnostic Aids*
3	1. Ignition “OFF.” 2. Disconnect the ION Sensing module. 3. Disconnect the PCM. Is the action complete?	—	Go to *Step 4*	Go to *Step 3*
4	Check the ION Sensing module harness between the PCM and ION Sensing module circuit at the ION Sensing module harness connector. Was a problem found?	—	Verify repair	Go to *Step 6*
5	1. Disconnect the ignition coil. Is the action complete?	—	Go to *Step 6*	Go to *Step 5*
6	Check the ION Sensing module harness between the ignition coil and ION Sensing module circuit at the SEC line 1 harness connector. Was a problem found?	—	Verify repair	Go to *Step 7*
7	Check the following items; 1. Ignition coil and ignition coil circuit. 2. Ignition coil ground circuit for a poor connection. 3. If a problem is found, repair wiring harness as necessary. Was a problem found?	—	Verify repair	Go to *Step 8*
8	Replace the Ignition coil. Is the action complete?	—	Verify repair	Go to *Step 9*
9	Check the following items; 1. ION Sensing module ground circuit for a poor connection. 2. If a problem is found, repair wiring harness as necessary. Was a problem found?	—	Go to *Step 10*	Go to *Step 11*

Downloaded from www.Manualslib.com manuals search engine

DTC P1311 - ION Sensing Module SEC line 1 Circuit Fault (Cont'd)

Step	Action	Value(s)	Yes	No
10	Replace the ION Sensing module. Is the action complete?	—	Verify repair	Go to *Step 10*
11	Replace the PCM. **IMPORTANT:** The replacement PCM must be programmed. Refer to *ON-Vehicle Service in Power Control Module and Sensors for procedures.* And also refer to latest Service Bulletin. Check to see if the latest software is released or not. And then Down Load the LATEST PROGRAMMED SOFTWARE to the replacement PCM. Is the action complete?	—	Verify repair	—

Downloaded from www.Manualslib.com manuals search engine

Diagnostic Trouble Code (DTC)
P1312 ION Sensing Module SEC line 2 Circuit Fault

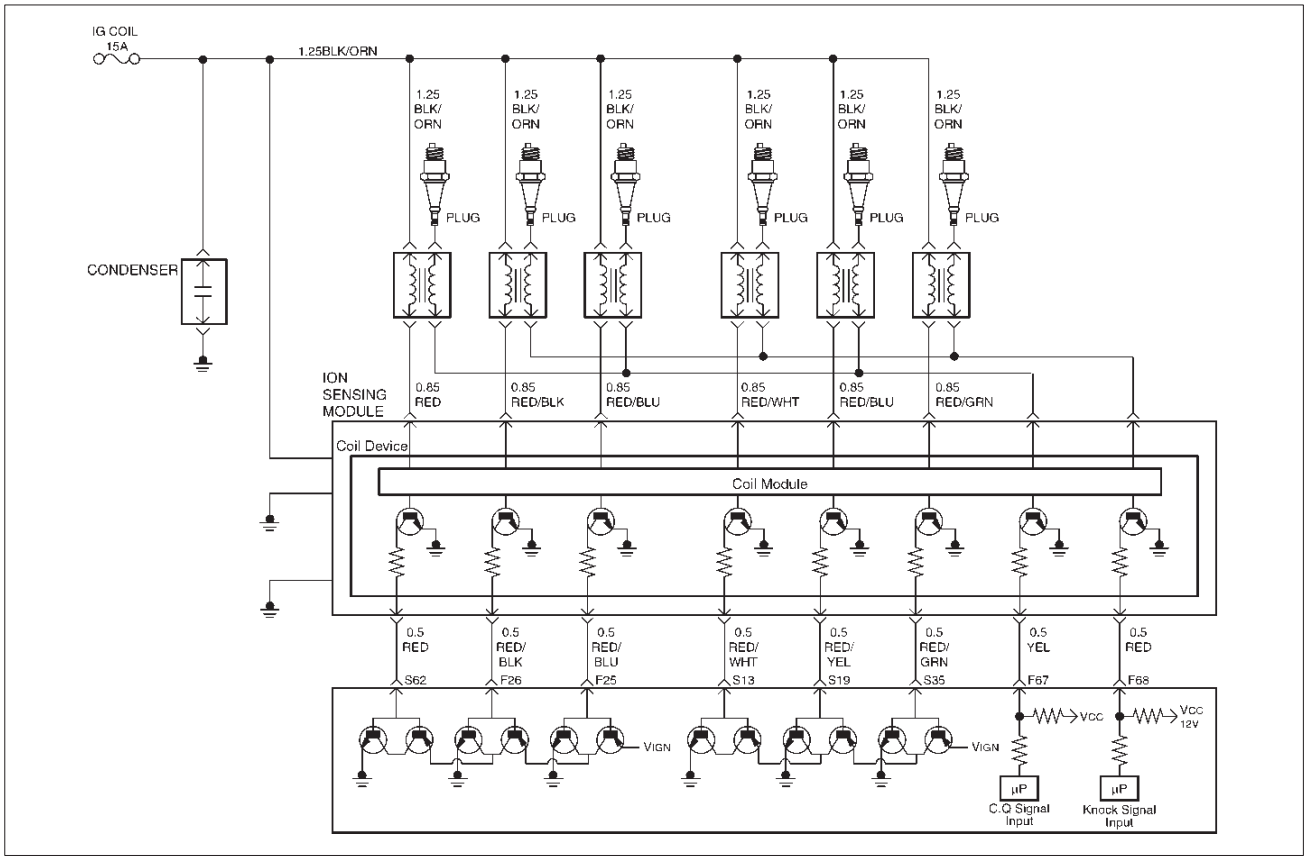

D06RY00067

Circuit Description

- The Power Control Module (PCM) will compara the secondary current reading to a predetermined maximum and minimum thresholds.

  If the secondary current signal pulse width is out of the predetermined renge, the fail counter will be incremented. If the failure counter exceeds the calibration, then the PCM is complete and a failure will be reported. If the sample counter threshold is reached before the failure threshold, then the PCM is complete and pass will be reported.

  This PCM will detect an open/short circuit in the secondary current sense input circuit, misfire on the entire bank for the secondary current sense input circuit, coil failure, and same internal Ignition Current Sense System (ICSS) module faults.

Conditions for setting the DTC

- Ignition voltage is between 10volt and 16 volts.
- MAP sensor signal is between 26kPa and 100 kPa.
- Fuel level is more than 10%.
- Engine speed is between 650rpm and 6500rpm.
- ION Sensing Module circuit is open or shorted signals on the SEC 2 line.

Action Taken When the DTC Sets

- The PCM will illuminate the malfunction indicator lamp (MIL) the first time the fault is detected.
- The PCM calculates an air flow value based on idle air control valve position, throttle position, RPM and barometric pressure.
- The PCM will store condition which were present when the DTC was set as Freeze Frame and in the Failure Records data.

Conditions for Clearing the MIL/DTC

- The PCM will turn the MIL “OFF” on the third consecutive trip cycle during which the diagnostic has been run and the fault condition is no longer present.
- A history DTC P1312 will clear after 40 cosecutive trip cycle during which the warm up cycles have occurred without a fault.
- DTC P1312 can be cleared using the Tech 2 “Clear Info” function or by disconnecting the PCM battery feed.

Diagnostic Aids

An intermittent may be caused by the following:

- Poor connections.
- Mis routed harness.
- Rubbed through wire insulation.
- Broken wire inside the insulation.

Check for the following conditions:

Downloaded from www.Manualslib.com manuals search engine

- Poor connection at PCM-Inspect harness connectors for backed out terminals, improper mating, broken locks, improperly formed or damaged terminals, and poor terminal to wire connection.
- Damaged harness-Inspect the wiring harness for damage. If the harness appears to be OK, observe the moving connectors and wiring harnesses related to the sensor.

  A change in the display will indicate the location of the fault. If DTC P1312 cannot be duplicated, the information included in the Failure Records data can be useful in determined vehicle mileage since the DTC was last set.

  If it is determined that the DTC occurs intermittently, performing the DTC P1312 Diagnostic Chart may isolate the cause of the fault.

DTC P1312 - ION Sensing Module SEC line 2 Circuit Fault

Step	Action	Value(s)	Yes	No
1	Was the “On-Board (OBD) System Check” performed?	—	Go to *Step 2*	Go to *OBD System Check*
2	1. Ignition “ON,” engine “OFF.” 2. Review and record Tech 2 Failure Records data. 3. Operate the vehicle within Failure Records conditions as noted. 4. Using a Tech 2, monitor “DTC” info for DTC P1312. Does the Tech 2 indicate DTC P1312 failed this ignition?	—	Go to *Step 3*	Refer to *Diagnostic Aids*
3	1. Ignition “OFF.” 2. Disconnect the ION Sensing module. 3. Disconnect the PCM. Is the action complete?	—	Go to *Step 4*	Go to *Step 3*
4	Check the ION Sensing module harness between the PCM and ICSS module circuit at the ION Sensing Module harness connector. Was a problem found?	—	Verify repair	Go to *Step 6*
5	1. Disconnect the ignition coil. Is the action complete?	—	Go to *Step 6*	Go to *Step 5*
6	Check the ION Sensing module harness between the ignition coil and ION Sensing module circuit at the SEC line 2 harness connector. Was a problem found?	—	Verify repair	Go to *Step 7*
7	Check the following items; 1. Ignition coil and ignition coil circuit. 2. Ignition coil ground circuit for a poor connection. 3. If a problem is found, repair wiring harness as necessary. Was a problem found?	—	Verify repair	Go to *Step 8*
8	Replace the Ignition coil. Is the action complete?	—	Verify repair	Go to *Step 9*
9	Check the following items; 1. ION Sensing module ground circuit for a poor connection. 2. If a problem is found, repair wiring harness as necessary. Was a problem found?	—	Go to *Step 10*	Go to *Step 11*

Downloaded from www.Manualslib.com manuals search engine

DTC P1312 - ION Sensing Module SEC line 2 Circuit Fault (Cont'd)

Step	Action	Value(s)	Yes	No
10	Replace the ION Sensing module. Is the action complete?	—	Verify repair	Go to *Step 10*
11	Replace the PCM. **IMPORTANT:** The replacement PCM must be programmed. Refer to *ON-Vehicle Service in Power Control Module and Sensors for procedures.* And also refer to latest Service Bulletin. Check to see if the latest software is released or not. And then Down Load the LATEST PROGRAMMED SOFTWARE to the replacement PCM. Is the action complete?	—	Verify repair	—

Downloaded from www.Manualslib.com manuals search engine

Diagnostic Trouble Code (DTC)
P1326 ION Sensing Module Combustion Quality Input Circuit Fault

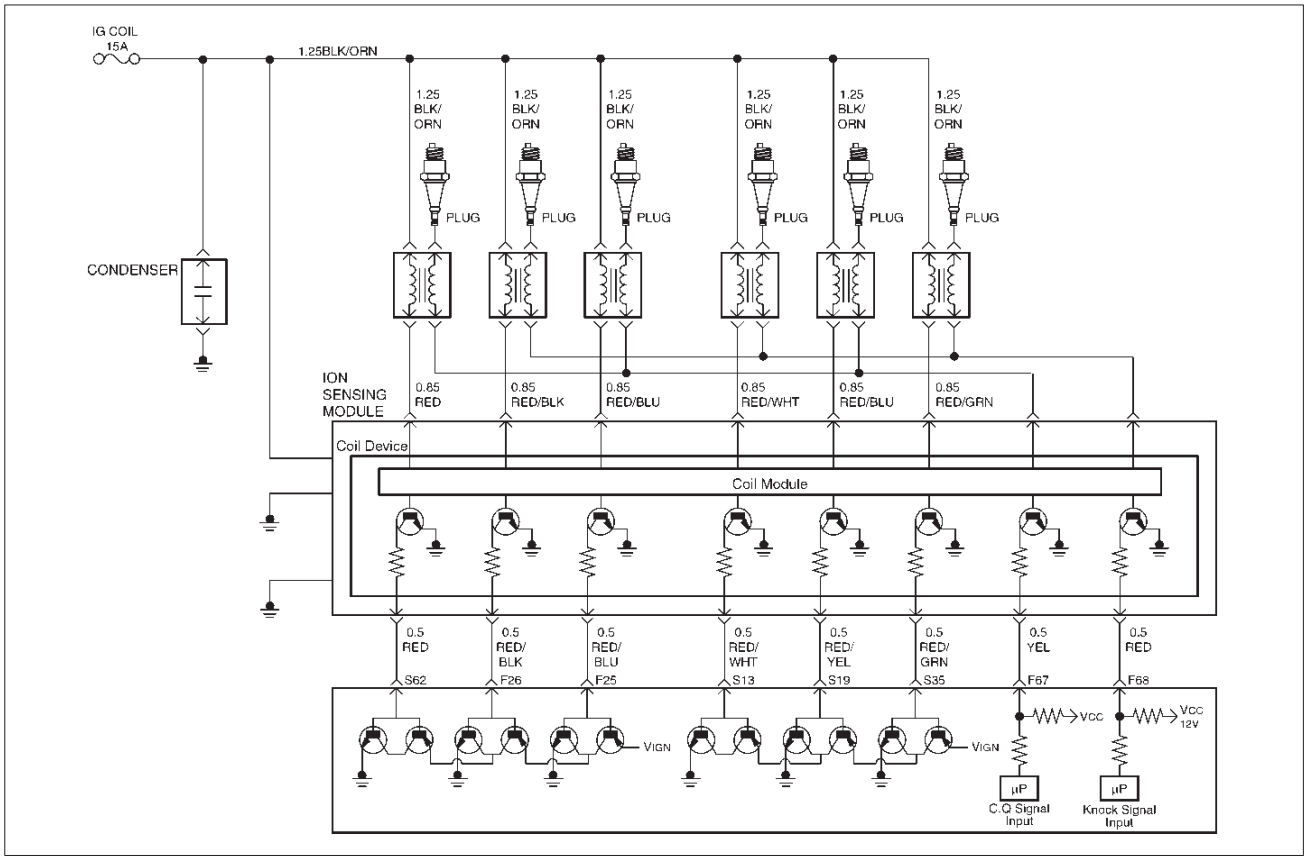

D06RY00067

Circuit Description

The Power Control Module (PCM) checks the validity of the signals used in the ION Sensing module at the following engine operating conditions.

- The test is performed to evauate the Combustion Quality (CQ) signal pulse width if it is within a predetermined range. If the CQ signal puls width is out of the predetermined range, the fail counter will be incremented. If the failure counter exceeds the calibration, then test is complete and a failure will be reported. If the sample counter threshold is reached before the failure threshold, then the test is complete and a pass will be reported. This test will detect an open/short in the QC line circuit, ION Sensing module faults and analog input faults in the PCM.

Conditions for setting the DTC

- Ignition voltage is between 10volt and 16 volts.
- No Cramk DTCs set.
- No cylinder ID DTCs set.

Action Taken When the DTC Sets

- The PCM will illuminate the malfunction indicator lamp (MIL) the first time the fault is detected.
- The PCM calculates an air flow value based on idle air control valve position, throttle position, RPM and barometric pressure.
- The PCM will store condition which were present when the DTC was set as Freeze Frame and in the Failure Records data.

Conditions for Clearing the MIL/DTC

- The PCM will turn the MIL “OFF” on the third consecutive trip cycle during which the diagnostic has been run and the fault condition is no longer present.
- A history DTC P1326 will clear after 40 cosecutive trip cycle during which the warm up cycles have occurred without a fault.
- DTC P1326 can be cleared using the Tech 2 “Clear Info” function or by disconnecting the PCM battery feed.

Diagnostic Aids

An intermittent may be caused by the following:

- Poor connections.
- Mis routed harness.
- Rubbed through wire insulation.
- Broken wire inside the insulation.

Check for the following conditions:

- Poor connection at PCM-Inspect harness connectors for backed out terminals, improper mating, broken locks, improperly formed or damaged terminals, and poor terminal to wire connection.
- Damaged harness-Inspect the wiring harness for damage. If the harness appears to be OK, observe the moving connectors and wiring harnesses related to the sensor.

  A change in the display will indicate the location of the fault. If DTC P1326 cannot be duplicated, the information included in the Failure Records data

Downloaded from www.Manualslib.com manuals search engine

can be useful in determined vehicle mileage since the DTC was last set.

If it is determined that the DTC occurs intermittently, performing the DTC P1326 Diagnostic Chart may isolate the cause of the fault.

DTC P1326 - ION Sensing Module Combustion

Step	Action	Value(s)	Yes	No
1	Was the “On-Board (OBD) System Check” performed?	—	Go to *Step 2*	Go to *OBD System Check*
2	1. Ignition “ON,” engine “OFF.” 2. Review and record Tech 2 Failure Records data. 3. Operate the vehicle within Failure Records conditions as noted. 4. Using a Tech 2, monitor “DTC”info for DTC P1326. Does the Tech 2 indicate DTC P1326 failed this ignition?	—	Go to *Step 3*	Refer to *Diagnostic Aids*
3	1. Ignition “OFF.” 2. Disconnect the ION Sensing module. 3. Disconnect the PCM. Is the action complete?	—	Go to *Step 4*	Go to *Step 3*
4	Check the ION Sensing module harness between the PCM and ION Sensing module circuit at the QC line harness connector. Was a problem found?	—	Verify repair	Go to *Step 6*
5	1. Disconnect the ignition coil. Is the action complete?	—	Go to *Step 6*	Go to *Step 5*
6	Check the ION Sensing module harness between the ignition coil and ICSS module circuit at the ION Sensing Module harness connector. Was a problem found?	—	Verify repair	Go to *Step 7*
7	Check the following items; 1. Ignition coil and ignition coil circuit. 2. Ignition coil ground circuit for a poor connection. 3. If a problem is found, repair wiring harness as necessary. Was a problem found?	—	Verify repair	Go to *Step 8*
8	Replace the Ignition coil. Is the action complete?	—	Verify repair	Go to *Step 9*
9	Check the following items; 1. ION Sensing module ground circuit for a poor connection. 2. If a problem is found, repair wiring harness as necessary. Was a problem found?	—	Go to *Step 10*	Go to *Step 11*

Downloaded from www.Manualslib.com manuals search engine

DTC P1326 - ION Sensing Module Combustion (Cont'd)

Step	Action	Value(s)	Yes	No
10	Replace the ION Sensing module. Is the action complete?	—	Verify repair	Go to *Step 10*
11	Replace the PCM. **IMPORTANT:** The replacement PCM must be programmed. Refer to *ON-Vehicle Service in Power Control Module and Sensors for procedures.* And also refer to latest Service Bulletin .Check to see if the latest software is released or not. And then Down Load the LATEST PROGRMMED SOFTWARE to the replacement PCM. Is the action complete?	—	Verify repair	—

Downloaded from www.Manualslib.com manuals search engine

Diagnostic Trouble Code (DTC)
P1340 ION Sensing Module Cylinder ID Fault (Cylinder Synchronization Fail)

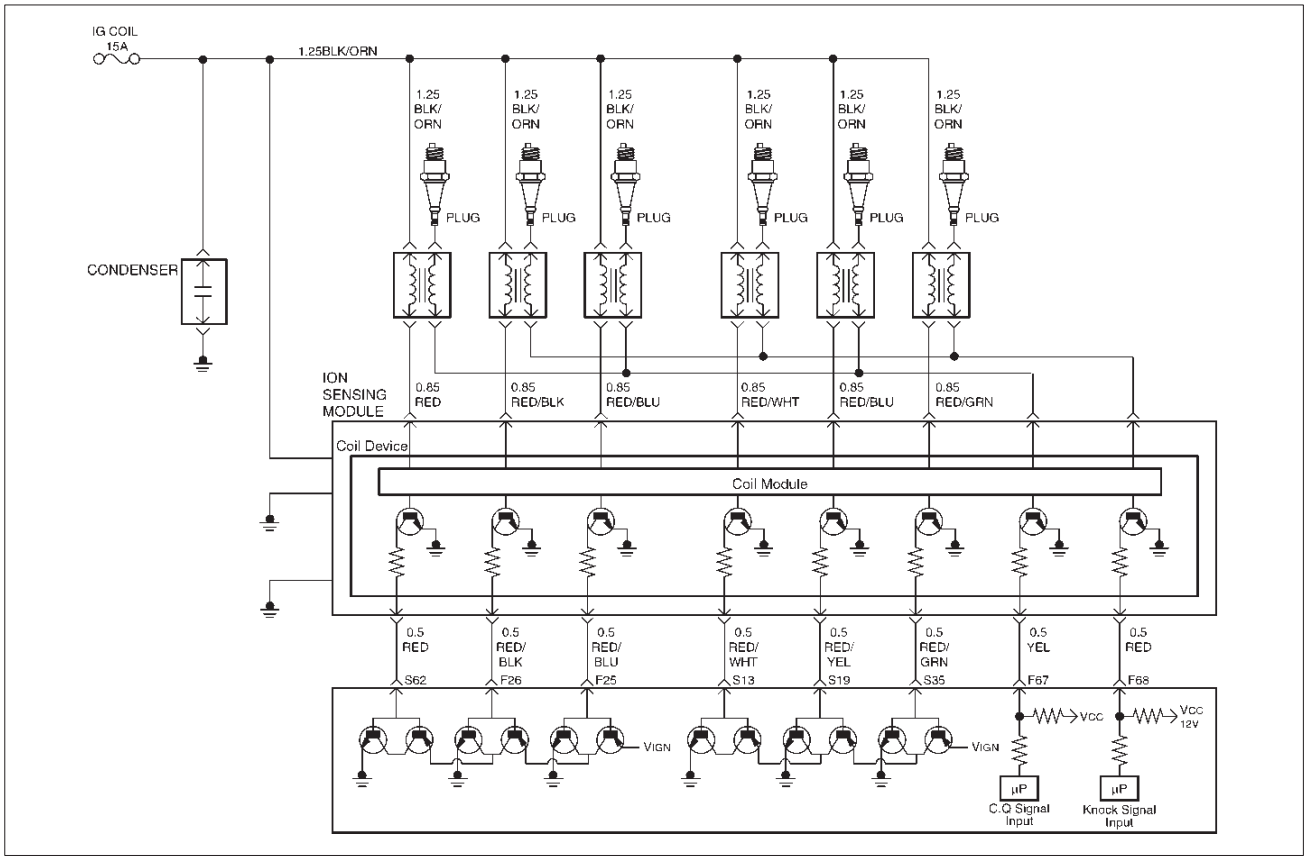

D06RY00067

Circuit Description

The Power Control Module (PCM) checks the validity of the signals used in the ION Sensing module at the following engine opreating conditions.

- This test will return a fault if the cylinder synchronization routine has not been completed after a predetermined number of events after crank. This test will detect fault that will prevent the PCM from synchronaization, such as Knock Signal (KI) - Combustion Quality (CQ) lines being swapped, shorted spark plugs, ION Sensing module faults, an PCM hardware faults.

Conditions for setting the DTC

- Ignition voltage is between 11volt and 16 volts.
- Engine speed is between 650rpm and 6500rpm.
- No ECT DTCs set.
- No injector DTCs set.
- No Fuel Trim DTCs set.
- No Misfire DTCs set.
- No system voltage DTCs set.

Action Taken When the DTC Sets

- The PCM will illuminate the malfunction indicator lamp (MIL) the first time the fault is detected.
- The PCM calculates an air flow value based on idle air control valve position, throttle position, RPM and barometric pressure.
- The PCM will store condition which were present when the DTC was set as Freeze Frame and in the Failure Records data.

Conditions for Clearing the MIL/DTC

- The PCM will turn the MIL “OFF” on the third consecutive trip cycle during which the diagnostic has been run and the fault condtion is no longer present.
- A history DTC P1340 will clear after 40 cosecutive trip cycle during which the warm up cycles have occurred without a fault.
- DTC P1340 can be cleared using the Tech 2 “Clear Info” function or by disconnecting the PCM battery feed.

Diagnostic Aids

An intermittent may be caused by the following:

- Poor connectons.
- Mis routed harness.
- Rubbed through wire insulation.
- Broken wire inside the insulation.

Check for the following conditions:

- Poor connection at PCM-Inspect harness connectors for backed out terminals, improper mating, broken locks, improperly formed or damaged terminals,and poor terminal to wire connection.
- Damaged harness–Inspect the wiring harness for damage. If the harness appears to be OK, observe the moving connectors and wiring harnesses related to the sensor.

Downloaded from www.Manualslib.com manuals search engine

A change in the display will indicate the location of the fault. If DTC P1340 cannot be duplicated, the information included in the Faillure Records data can be useful in determined vehicle mileage since the DTC was last set.

If it is determined that the DTC occurs intermittently, performing the DTC P1340 Diagnostic Chart may isolate the cause of the fault.

DTC P1340 - ION Sensing Module Cylinder ID Fault (Cylinder Synchronization Fail)

Step	Action	Value(s)	Yes	No
1	Was the “On-Board (OBD) System Check” performed?	—	Go to *Step 2*	Go to *OBD System Check*
2	1. Ignition “ON,” engine “OFF.” 2. Review and record Tech 2 Failure Records data. 3. Operate the vehicle within Failure Records conditions as noted. 4. Using a Tech 2, monitor “ DTC” info for DTC P1340. Does the Tech 2 indicate DTC P1340 failed thisignition?	—	Go to *Step 3*	Refer to *DiagnosticAids*
3	1. Ignition “OFF.” 2. Disconnect the ION Sensing module. 3. Disconnect the PCM. Is the action complete?	—	Go to *Step 4*	Go to *Step 3*
4	Check the ION Sensing module harness between the PCM and ICSS module circuit at the QC line harness connector. Was a problem found?	—	Verify repair	Go to *Step 6*
5	1. Disconnect the ignition coil. Is the action complete?	—	Go to *Step 6*	Go to *Step 5*
6	Check the ION Sensing module harness between the ignition coil and ION Sensing module circuit at the ION Sensing Module harness connector. Was a problem found?	—	Verify repair	Go to *Step 7*
7	Check the following items; 1. Ignition coil and ignition coil circuit. 2. Ignition coil ground circuit for a poor connection. 3. If a problem is found, repair wiring harness as necessary. Was a problem found?	—	Verify repair	Go to *Step 8*
8	Replace the Ignition coil. Is the action complete?	—	Verify repair	Go to *Step 9*
9	Check the following items; 1. ION Sensing module ground circuit for a poor connection. 2. If a problem is found, repair wiring harness as necessary. Was a problem found?	—	Go to *Step 10*	Go to *Step 11*

Downloaded from www.Manualslib.com manuals search engine

DTC P1340 - ION Sensing Module Cylinder ID Fault (Cylinder Synchronization Fail) (Cont'd)

Step	Action	Value(s)	Yes	No
10	Replace the ION Sensing module. Is the action complete?	—	Verify repair	Go to *Step 10*
11	Replace the PCM. **IMPORTANT:** IMPORTANT; The replacement PCM must be programmed. Refer to *ON-Vehicle Service in Power Control Module and Sensors for procedures.* And also refer to latest Service Bulletin.Check to see if the latest software is released or not. And then Down Load the LATEST PROGRAMMED SOFTWARE to the replasement PCM. Is the action complete?	—	Verify repair	—

Downloaded from www.Manualslib.com manuals search engine

Diagnostic Trouble Code (DTC) P1404 EGR Stuck Closed

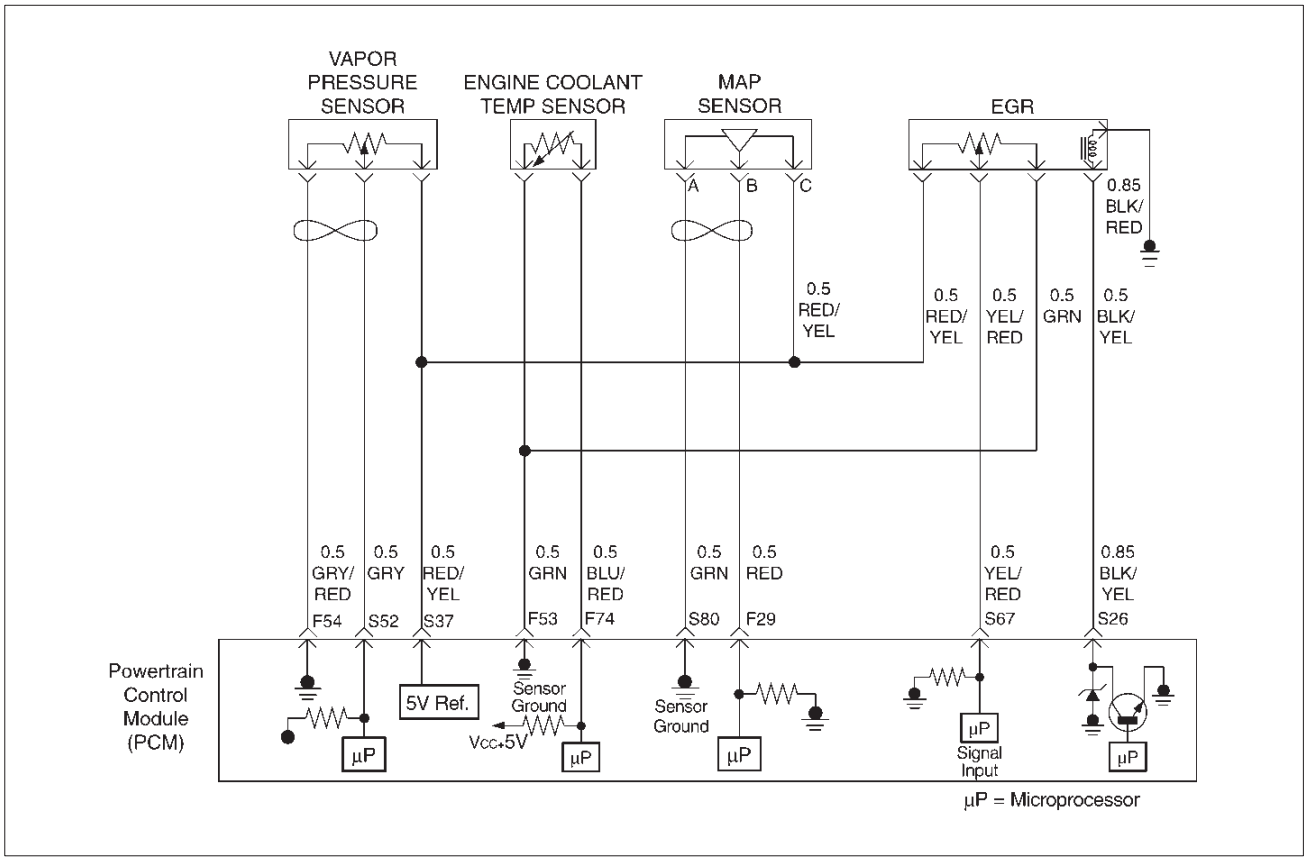

Circuit Description

The powertrain control module (PCM) monitors the EGR valve pintle position input to ensure that the valve responds properly to commands from the PCM, and to detect a fault if current pintle zero position is different from the learned zero position. If the PCM detects a pintle position signal indicates more than 30 % different between current zero position and the learned zero position for more than 5 seconds, and this condition exists 3 times during trip, then the PCM will set DTC P1404.

Conditions for Setting the DTC

- Ignition voltage is between 11 and 16 volts.
- Intake Air temp is more than 3˚C.
- Desired EGR position is 0.
- Difference of EGR pintle position between current and the learned zero is more than 30 % for more than 5 seconds, and exists three time to the above condition during a trip the PCM will set DTC 1404. Then it trigger the PCM lights on.

Action Taken When the DTC Sets

- The PCM will illuminate the malfunction indicator lamp (MIL) after consecutive 2nd trip in which the fault is detected.
- The PCM will store conditions which were present when the DTC was set as Freeze Frame and in Failure Records data.

Conditions for Clearing the MIL/DTC

- The PCM will turn the MIL “OFF” on the third consecutive trip cycle during which the diagnostic has been run and the fault condition is no longer present.
- A history DTC P1404 will clear after 40 consecutive warm-up cycles have occurred without a fault.
- DTC P1404 can be cleared by using the Tech 2 “Clear Info” function or by disconnecting the PCM battery feed.

Diagnostic Aids

Check for the following conditions:

- Excessive carbon deposit on EGR valve shaft and/or foreign material may cause the EGR valve not to fully seated. The carbon deposit may occur by unusual port operation. Remove foreign material and/or excessive carbon deposit on EGR valve shaft and may allow the EGR valve to be fully seated.
- Poor connection or damaged harness – Inspect the wiring harness for damage.

Reviewing the Failure Records vehicle mileage since the diagnostic test last failed may help determine how often the condition that caused the DTC to be set occurs. This may assist in diagnosing the condition.

Downloaded from www.Manualslib.com manuals search engine

DTC P1404 – EGR Stuck Closed

Step	Action	Value(s)	Yes	No
1	Was the “On-Board Diagnostic (OBD) System Check” performed?	—	Go to *Step 2*	Go to *OBD System Check*
2	1. Ignition “ON,” engine “OFF”, review and record Tech 2 Failure Records Data. 2. Operate the vehicle within Failure Records conditions as noted. 3. Using a Tech 2, monitor “DTC inf. for DTC P1404 until the DTC P1404 test runs. Note the result. Does the Tech 2 indicates DTC P1404 failed this ignition?	—	Go to *Step 3*	Refer to *Diagnostic Aids*
3	1. Disconnect the EGR valve harness connector. 2. Inspect the EGR valve and connectors for damaged pin or terminals. Were there any damaged pins or terminals?	—	Go to *Step 4*	Go to *Step 5*
4	Repair the damaged pin or terminal. Is the action complete?	—	Verify repair	—
5	1. Remove EGR valve from Engine. 2. Inspect EGR valve for any excessive carbon deposit on EGR shaft. 3. Inspect for any foreign material inside of EGR valve. Was excessive carbon deposit on EGR valve shaft and/or foreign material in EGR valve ?	—	Go to *Step 6*	Go to *Step 7*
6	1. Clean up EGR valve shaft and inside of EGR valve. 2. Remove foreign material from EGR valve. 3. Visually inspect damage of pintle and seat to see if it is bent. If damaged leakage may occur. Was there any severe damage which affects function?	—	Go to *Step 8*	Verify repair Go to *Step 7*
7	1. Install the EGR valve. 2. Ignition “OFF”. 3. Install the Tech 2. 4. Run the engine at idle. 5. On the Tech 2, select EGR Control Test. 6. Use the “UP” arrow to increase the EGR from 0% to 40%. Did EGR work properly?	—	—	Go to *Step 8*
8	1. Reset the learned zero EGR valve position. 2. Repeat step 7. Did EGR work properly?	—	Verify repair	Go to *Step 9*

Downloaded from www.Manualslib.com manuals search engine

DTC P1404 – EGR Stuck Closed (Cont'd)

Step	Action	Value(s)	Yes	No
9	Replace the EGR valve. Does DTC P1404 still fail "DTC" test on the Tech 2?	—	Go to *Step 10*	Verify repair
10	Replace the PCM. **IMPORTANT:** The replacement PCM must be programmed. Refer to *On-Vehicle Service* in *Powertrain Control Module and Sensors* for procedures. And also refer to latest Service Bulletin. Check to see if the Latest software is released or not. And then Down Load the LATEST PROGRAMMED SOFTWARE to the replacement PCM. Is the action complete?	—	Verify repair	—

Downloaded from www.Manualslib.com manuals search engine

Diagnostic Trouble Code (DTC) P1441 EVAP System Flow During Non-Purge

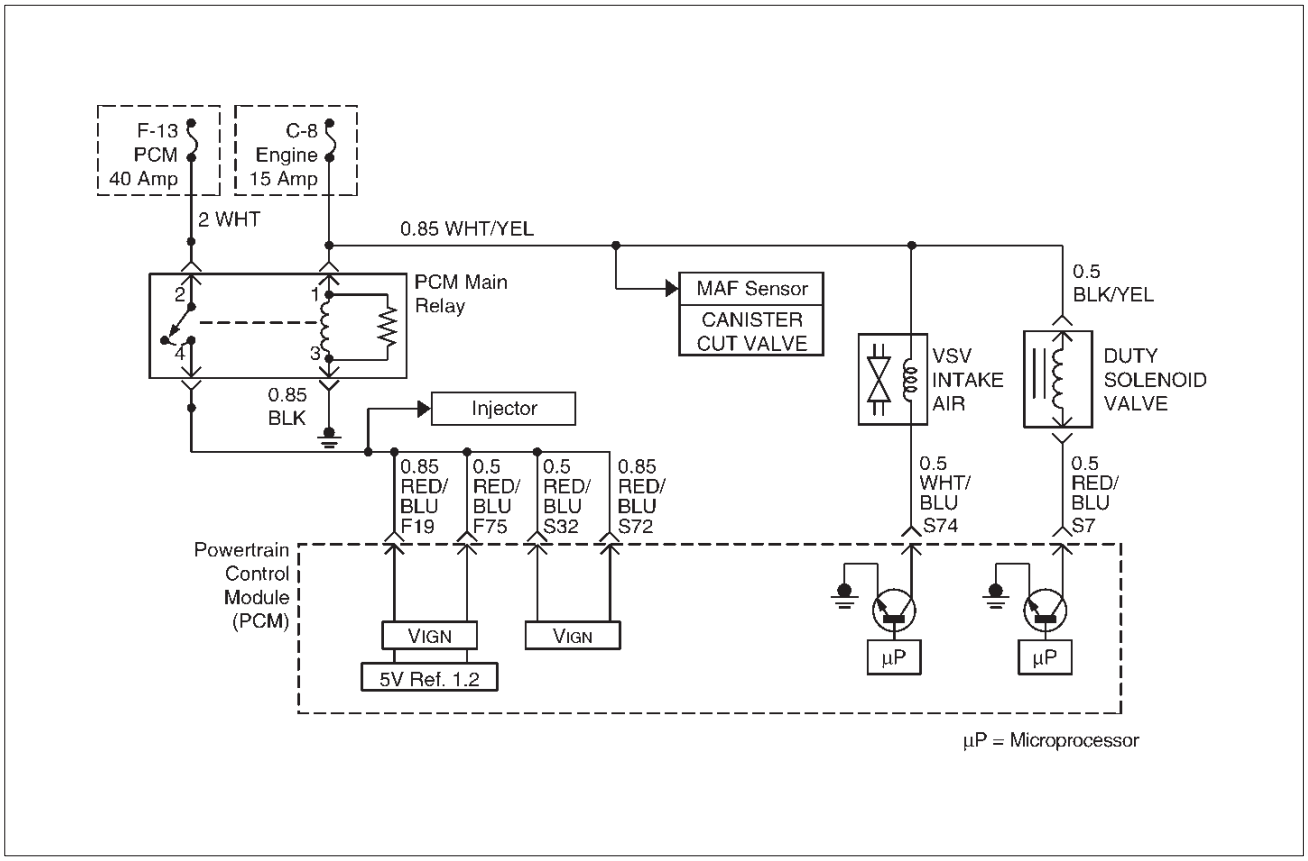

D06RY00128

Circuit Description

Canister purge is controlled by a solenoid valve that allows manifold vacuum to purge the canister. The powertrain control module (PCM) supplies a ground to energize the solenoid valve (purge "ON"). The EVAP purge solenoid control is pulse-width modulated (PWM) or turned "ON" and "OFF" several times a second. The duty cycle (pulse width) is determined by engine operating conditions including load, throttle position, coolant temperature and ambient temperature. The duty cycle is calculated by the PCM and the output is commanded when the appropriate conditions have been met.

The EVAP purge vacuum switch is a normally closed switch positioned in the purge line between the canister and to EVAP purge solenoid. The EVAP purge vacuum switch will open when vacuum increases to greater than 5 inches of water in the purge line. The PCM monitors the EVAP purge vacuum switch signal to determine if the evaporative emission control system is working properly. If the switch is open (purge flow detected) when the PCM is not commanding the EVAP purge solenoid "ON," DTC P1441 will be set.

Conditions for Setting the DTC

- No active ECT sensor, IAT sensor, MAP sensor, vacuum switch, or TP sensor DTCs set.
- BARO reading is above 85 kPa.
- Engine coolant temperature is below 70˚C (158˚F).
- Start-up intake air temperature (IAT) and start-up engine coolant temperature (ECT) are both above 5˚C (41˚F).
- The difference between start-up ECT and start-up IAT is less than 25˚C (45˚F).
- TP sensor indicates a throttle position above 12%.
- Battery voltage is between 11.5 volts and 16 volts.
- Engine speed is between 800 and 6,000 RPM.
- Canister purge duty cycle is below 3%.
- Canister purge vacuum switch is open, which results in the PCM signal voltage (from the vacuum switch input) being approximately 12 volts.
- All conditions are present for at least 3 seconds.

Action Taken When the DTC Sets

- The PCM will illuminate the malfunction indicator lamp (MIL) after the second consecutive trip in which the fault is detected.
- The PCM will store conditions which were present when the DTC was set as Freeze Frame and in the Failure Records data.

Conditions for Clearing the MIL/DTC

- The PCM will turn the MIL "OFF" on the third consecutive trip cycle during which the diagnostic has been run and the fault condition is no longer present.
- A history DTC P1441 will clear after 40 consecutive warm–up cycles have occurred without a fault.

Downloaded from www.Manualslib.com manuals search engine

- DTC P1441 can be cleared by using the Tech 2 “Clear Info” function or by disconnecting the PCM battery feed.

Diagnostic Aids

Check for the following conditions:

- Poor connection at PCM – Inspect harness connectors for backed-out terminals, improper mating, broken locks, improperly formed or damaged terminals, and poor terminal-to-wire connection.
- Damaged harness – Inspect the wring harness for damage. If the harness appears to be OK, observe the EVAP vacuum switch display on the Tech 2 while moving connectors and wiring harnesses related to the sensor. A change in the display will indicate the location of the fault.

Reviewing the Failure Records vehicle mileage since the diagnostic test last failed may help determine how often the condition that caused the DTC to be set occurs. This may assist in diagnosing the condition.

Test Description

Number(s) below refer to the step number(s) on the Diagnostic Chart.

2. The canister purge vacuum switch is normally closed when no vacuum (purge) is present. With the ignition “ON” and the engine “OFF,” there shouldn’t be any vacuum (purge) present in the EVAP system.
3. Determines if the PCM is able to control the EVAP purge solenoid valve.
4. Determines if the DTC will set under the conditions present when the DTC was originally stored. If not, the fault is intermittent.
5. Checks for a grounded EVAP purge solenoid driver circuit, a faulty EVAP vacuum switch, or a leaking EVAP purge solenoid valve.

DTC P1441 – EVAP System Flow During Non-Purge

Step	Action	Value(s)	Yes	No
1	Was the “On-Board Diagnostic (OBD) System Check” performed?	—	Go to *Step 2*	Go to *OBD System Check*
2	1. Ignition “OFF.” 2. Remove the fuel filler cap. 3. Ignition “ON.” 4. Observe “Fuel Tank Pressure” on the Tech 2. Is “Fuel Tank Pressure” at the specified value?	1.51V	Go to *Step 3*	Go to *DTC P0452 or P0453*
3	1. Re-install the fuel filler cap. 2. Using the Tech 2, command the EVAP Vent Solenoid Valve “ON” (Closed). 3. Disconnect the canister side rubber hose end that hose is connected between the Purge Solenoid Valve and Canister. **IMPORTANT:** Before continuing with the diagnosis, zero the EVAP pressure/purge cart J41413 (refer to the tool operating instructions). And them monitor the fuel tank inner pressure using the Tech 2. Does the fuel tank pressure remain the specified value?	1.52 - 1.60V	Go to *Step 4*	Go to *Step 6*
4	1. Disconnect the EVAP pressure/purge cart J41413, and then plug the hose end. 2. Disconnect the rubber hose end of engine vacuum source side, (the hose connected between Purge Solenoid Valve and engine). 3. Connect the vacuum hand pump to this rubber hose end. 4. Then apply the -15 in H2O vacuum by the vacuum pump. 5. Monitor the fuel tank inner pressure using the Tech 2. Does the fuel tank inner pressure hold the specified value?	1.47 - 1.51V	Go to *Step 6*	Go to *Step 5*

Downloaded from www.Manualslib.com manuals search engine

DTC P1441 – EVAP System Flow During Non-Purge (Cont'd)

Step	Action	Value(s)	Yes	No
5	Replace the Purge Solenoid Valve.	—	Verify Repair	—
6	1. Check leaks, kinks or pinched hoses at the EVAP system rubber hose line, and also check if the rubber hoses are correctly connected or not. 2. Check for a leak from Vent Solenoid Valve and EVAP system rubber hoses, and also check for clogged Filter of air separator which is located near the vent solenoid valve. Was a problem found? Using the Vacuum Hose Routing Diagram, repair or re-connect the rubber hoses correctly.	—	Verify Repair	Go to *Step 7*
7	1. Start engine. 2. Remove the Fuel Filler cap. 3. Using the Tech 2, command the EVAP Vent Solenoid Valve "ON" (closed) and Purge Solenoid Valve "OFF" (0%). 4. Replace the Fuel Filler Cap. 5. Run the engine at 2500RPM constant while monitoring "Fuel Tank Vacuum" on the Tech 2. Does the fuel tank vacuum remain at the specified value while the EVAP Vent Solenoid Valve "ON" (closed) and Purge Solenoid Valve "OFF" (0%)?	30 - 40 %	Verify Repair	Go to *Diagnostic Aids*

Downloaded from www.Manualslib.com manuals search engine

Diagnostic Trouble Code (DTC) P1514 TPS - MAF Correlation Error

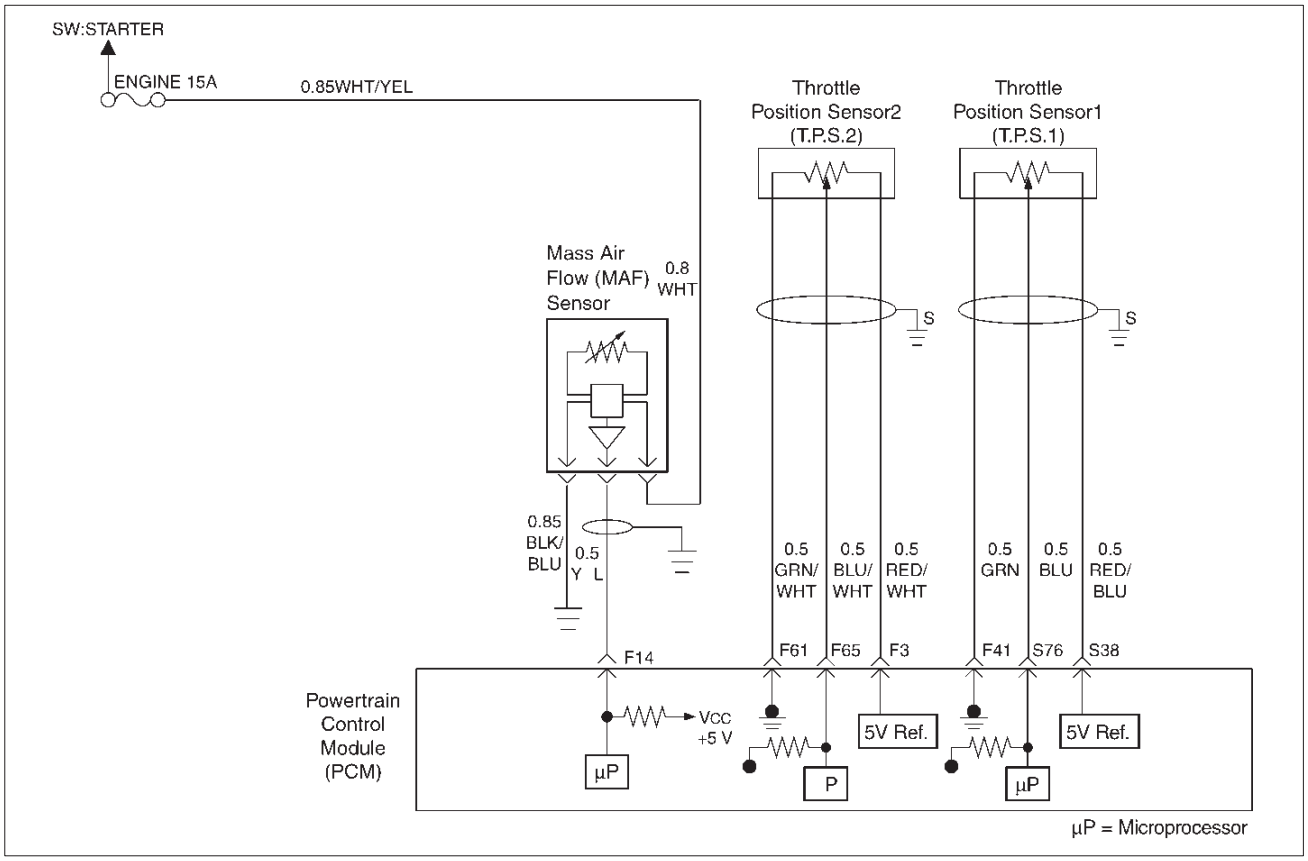

D06RY00090

Circuit Description

- The throttle position (TP) sensor circuit provides a voltage signal relative to throttle blade angle.

  The throttle blade angle will vary about 8 % at closed throttle to about 92 % at wide open throttle (WOT).
- The mass air flow (MAF) sensor measures the amount of air which passes through it into the engine during a given time. The powertrain Control Module (PCM) uses the mass air flow information to monitor engine operating conditions for fuel delivery calculations.

  A large quantitiy of air entering the engine indicates an accleration or high load situation, while a small quantity or air indicates deceleration or idle.

  The MAF sensor produces a frequency signal which can be monitored using a Tech 2. The frequency will vary within a range of around 4 to 7g/s at idle to around 25 to 40g/s at maximum engine load.

Conditions for setting the DTC

- The engine is running.
- No MAF sensor DTCs are set.
- Throttle actuation mode is not off.
- MAF reading-ETC estimated air flow is less than 40g/s for 250 failres within test 1000 test samples (15.6 m sec).

Action Taken When the DTC Sets

- The PCM will illuminate the malfunction indicator lamp (MIL) the first time the fault is detected.
- The PCM calculates an air flow value based on idle air control valve position, throttle position, RPM and barometric pressure.
- The PCM will store condition which were present when the DTC was set as Freeze Frame and in the Failure Records data.

Conditions for Clearing the MIL/DTC

- The PCM will turn the MIL “OFF” on the third consecutive trip cycle during which the diagnostic has been run and the fault condtion is no longer present.
- A history DTC P1514 will clear after 40 cosecutive trip cycle during which the warm up cycles have occurred without a fault.
- DTC P1514 can be cleared using the Tech 2 “Clear Info” function or by disconnecting the PCM battery feed.

Diagnostic Aids

An intermittent may be caused by the following:

- Poor connectons.
- Mis routed harness.
- Rubbed through wire insulation.
- Broken wire inside the insulation.

Check for the following conditions:

- Poor connection at PCM - Inspect harness connectors for backed out terminals, improper mating,broken

Downloaded from www.Manualslib.com manuals search engine

locks, improperly formed or damaged terminals,and poor terminal to wire connection.

- Damaged harness - Inspect the wiring harness for damage. If the harness appears to be OK, observe the Mass Air Flow, TP sensor 1, TP sensor 2 display on the Tech 2 while moving connectors and wiring harnesses related to the sensor.
- Plugged intake air duct or filter element
- A wide - open throttle acceleration from a stop should cause the mass air flow displayed on a Tech 2 to increase from about 3 – 6 g/s at idle to 100 g/s or greater at the time of the 1 – 2 shift. If not, check for a restriction.

A change in the display will indicate the location of the fault. If DTC P1514 cannot be duplicated, the information included in the Faillure Records data can be useful in determined vehicle mileage since the DTC was last set.

If it is determined that the DTC occurs intermittently, performing the DTC P1514 Diagnostic Chart may isolate the cause of the fault.

DTC P1514 - TPS-MAF Correlation Error

Step	Action	Value(s)	Yes	No
1	Was the “On-Board (OBD) System Check” performed?	—	Go to *Step 2*	Go to *OBD System Check*
2	Was the “Electric Throttle Control (ETC) System Check” performed?	—	Go to *Step 3*	Go to *ETC System Check*
3	1. Ignition “ON,” engine “OFF.” 2. Review and record Tech 2 Failure Records data. 3. Operate the vehicle within Failure Records conditions as noted. 4. Using a Tech 2, monitor “DTC” info for DTC P1514. Does the Tech 2 indicate DTC P1514 failed this ignition?	—	Go to *Step 4*	Refer to *Diagnostic Aids*
4	1. Start the engine. 2. With the engine idling, monitor “MAF Frequency” display on the Tech 2. Is the “MAF Frequency” below the specified value?	6 ~ 10 g/s	Go to *Step 5*	Go to *Step 8*
5	1. Ignition “OFF.” 2. Disconnect the MAF sensor connector. 3. Ignition “ON,” engine idling. 4. Using a Tech 2, monitor “MAF Frequency.” Does the Tech 2 indicate a “MAF Frequency” at the specified value?	0g/s	Go to *Step 6*	Go to *Step 7*
6	Replace the MAF sensor. Is the action complete?	—	Verify repair	Go to *Step 9*
7	1. Check the MAF harness for incorrect routing near high voltage components (solenoids, relays, motors). 2. If incorrect routing is found, correct the harness routing. Was a problem found?	—	Verify repair	Go to *Step 7*
8	1. With the engine idling, monitor “MAF Frequency.” display on the Tech 2. 2. Quickly snap open throttle to wide open throttle while under a road load and record value. Does the Tech 2 indicate a “MAF Frequency” at thespecified value?	6 ~ 10 g/s	Go to *Step 6*	Go to *Step 9*

Downloaded from www.Manualslib.com manuals search engine

DTC P1514 - TPS-MAF Correlation Error (Cont'd)

Step	Action	Value(s)	Yes	No
9	1. Ignition"ON", engine not running. 2. Observe the MAP reading on the Tech 2. Is the MAP reading less than the specified value?	65kPa	Go to *Step 10*	Go to *Step 13*
10	1. Disconnect the MAP sensor. 2. Connect a test 5 volt reference circuit and the MAP signal at the MAP sensor harness connector. 3. Observe the MAP reading on the Tech 2. Is the MAP reading less than the specified value? (If no, start with diagnosis chart for other sensors in the circuit and see if 5Vreturns.)	—	Go to *Step 12*	Go to *Step 11*
11	1. Check the MAP signal circuit between the PCM and MAP ground circuit. 2. If the MAP signal circuit is open or shoted, repair it as necessary. Was the MAP signal circuit open or shorted?	—	Verify repair	Go to *Step 13*
12	Replace the MAP sensor. Is the action complete?	—	Verify repair	—
13	Observe the TP angle reading on the Tech 2 while slowly opening the throttle. Does the TP angle increase steadily and evenly from the closed throttle value to the wide open throttle value?	Closed throttle TP sensor 1 =8 ~ 10 % TP sensor 2 =90 ~ 92 % Wide open throttle TP sensor 1 =90 ~ 92 % TP sensor 2 =8 ~ 10 %	Refer to *Diagnostic Aids*	Go to *Step 14*
14	1. Disconnect the TP sensor. 2. Observe the TP sensor reading on the Tech2. Is the TP sensor reading near the specified value?	0V	Go to *Step 15*	Go to *Step 16*
15	1. Connect a test light between the 5Volt reference circuit and the TP1 and TP2 sensor signal circuit at the TP sensor harness connector. 2. Observe the TP sensor reading on the Tech2. Is the TP sensor reading near the specified value?	5V	Go to *Step 18*	Go to *Step 17*
16	Check the following items; 1. TP1 and TP2 signal circuit for a short to voltage. 2. TP1 and TP2 sensor ground circuit for high resistance between the PCM and the TP sensor. 3. TP1 and TP2 sensor ground circuit for a poor connection. 4. If a problem is found, repair wiring harness as necessary. Was a problem found?	—	Verify repair	Go to *Step 19*

Downloaded from www.Manualslib.com manuals search engine

DTC P1514 - TPS-MAF Correlation Error (Cont'd)

Step	Action	Value(s)	Yes	No
17	Check the following items; 1. TP1and TP2 signal circuit or 5 volt reference circuit for a poor connection. 2. TP1 and TP2 signal circuit or 5 volt reference circuit for high resistance between the PCM and the TP1and TP2 sensor. 3. If a problem is found, repair wiring harness as necessary. Was a problem found?	—	Verify repair	Go to *Step 18*
18	Replace the TP sensor. Is the action complete?	—	Verify repair	—
19	Replace the PCM. **IMPORTANT:** The replacement PCM must be programmed. Refer to *ON-Vehicle Service in Power Control Module and Sensors for procedures.* And also refer to latest Service Bulletin.Check to see if the latest software is released or not. And then Down Load the LATEST PROGRAMMED SOFTWARE to the replasement PCM. Is the action complete?	—	Verify repair	—

Downloaded from www.Manualslib.com manuals search engine

Diagnostic Trouble Code (DTC)
P1515 Command - Actual TPS Correlation Error

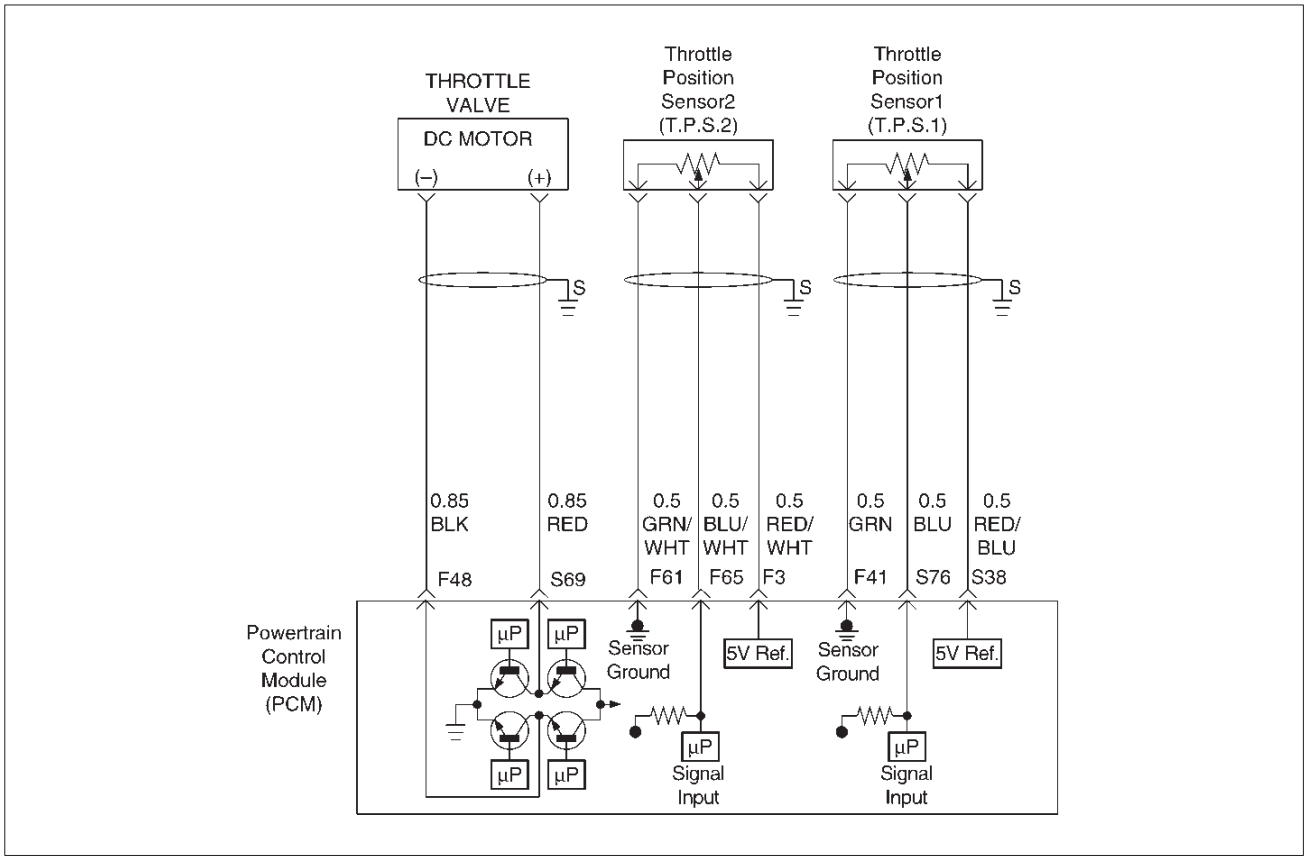

Circuit Description

- The throttle position (TP) sensor circuit provides a voltage signal relative to throttle position (blade angle).

  The throttle blade angle will vary about 8 % at closed throttle to about 92 % at wide open throttle(WOT).
- The DC motor circuit provides a voltage signal relative to command throttle position (blade angle).
- This DTC ditects the difference between actual throttle position and command throttle position.

Conditions for setting the DTC

- The ignition is “ON”.
- Throttle actuation mode is normal.
- Command Throttle position - Actual Throttle position is more than + 5 % for 100 counts within test 1000 test samples (15.6 m sec) else Actual Throttle position is less than + 40 % and Command Throttle position - Actual Throttle position is more than - 5 % or Command Throttle position - Actual Throttle position is more than - 20 % for 150 failres within test 1000 test samples (15.6 m sec).

Action Taken When the DTC Sets

- The PCM will illuminate the malfunction indicator lamp (MIL) the first time the fault is detected.
- The PCM calculates an air flow value based on idle air control valve position, throttle position, RPM and barometric pressure.
- The PCM will store condition which were present when the DTC was set as Freeze Frame and in the Failure Records data.

Conditions for Clearing the MIL/DTC

- The PCM will turn the MIL “OFF” on the third consecutive trip cycle during which the diagnostic has been run and the fault condtion is no longer present.
- A history DTC P1515 will clear after 40 cosecutive trip cycle during which the warm up cycles have occurred without a fault.
- DTC P1515 can be cleared using the Tech 2 “Clear Info” function or by disconnecting the PCM battery feed.

Diagnostic Aids

An intermittent may be caused by the following:

- Poor connectons.
- Mis routed harness.
- Rubbed through wire insulation.
- Broken wire inside the insulation.

Check for the following conditions:

- Poor connection at PCM-Inspect harness connectors for backed out terminals, mproper mating, locks, improperly formed or damaged terminals, and poor terminal to wire connection.

Downloaded from www.Manualslib.com manuals search engine

- Damaged harness-Inspect the wiring harness for damage. If the harness appears to be OK, observe the TP sensor 1, TP sensor 2 display on the Tech2 while moving connectors and wiring harnesses related to the sensor.

  A change in the display will indicate the location of the fault. If DTC P1515 cannot be duplicated, the information included in the Faillure Records data can be useful in determined vehicle mileage since the DTC was last set.

  If it is determined that the DTC occurs intermittently, performing the DTC P1515 Diagnostic Chart may isolate the cause of the fault.

DTC P1515 - Command - Actual TPS Correlation Error

Step	Action	Value(s)	Yes	No
1	Was the “On-Board (OBD) System Check” performed?	—	Go to *Step 2*	Go to *OBD System Check*
2	Was the “Electric Throttle Control (ETC) System Check” performed?	—	Go to *Step 3*	Go to *ETC System Check*
3	1. Ignition “ON,” engine “OFF.” 2. Review and record Tech 2 Failure Records data. 3. Operate the vehicle within Failure Records conditions as noted. 4. Using a Tech 2, monitor “ DTC” info for DTC P1515. Does the Tech 2 indicate DTC P1515 failed thisignition?	—	Go to *Step 4*	Refer to *Diagnostic Aids*
4	Observe the TP angle reading on the Tech 2 while slowly opening the throttle. Does the TP angle increase steadily and evenly from the closed throttle value to the wide open throttle value?	Closed throttle TP sensor 1 =8 ~ 10 % TP sensor 2 =90 ~ 92 % Wide open throttle TP sensor 1 =90 ~ 92 % TP sensor 2 =8 ~ 10 %	Go to *Step 8*	Go to *Step 5*
5	1. Ignition “OFF.” 2. Disconnect the DC motor. Is the DC motor reading near the specified value?	0.3 ~ 100 μ	Go to *Step 6*	Go to *Step 7*
6	Check the DC motor harness between the PCM and DC Motor circuit at the DC motor harness connector. Was a problem found?	—	Verify repair	Go to *Step 8*
7	Replace the DC motor. Is the action complete?	—	Verify repair	Go to *Step 6*
8	1. Disconnect the TP sensor. 2. Observe the TP sensor reading on the Tech 2. Is the TP sensor reading near the specified value?	0V	Go to *Step 9*	Go to *Step 10*
9	1. Connect a test light between the 5Volt reference circuit and the TP1 and TP2 sensor signal circuit at the TP sensor harness connector. 2. Observe the TP sensor reading on the Tech2. Is the TP sensor reading near the specified value?	5V	Go to *Step 12*	Go to *Step 11*

Downloaded from www.Manualslib.com manuals search engine

DTC P1515 - Command - Actual TPS Correlation Error (Cont'd)

Step	Action	Value(s)	Yes	No
10	Check the following items; 1. TP1 and TP2 signal circuit for a short to voltage. 2. TP1 and TP2 sensor ground circuit for high resistance between the PCM and the TP sensor. 3. TP1and TP2 sensor ground circuit for a poor connection. 4. If a problem is found,repair wiring harness as necessary. Was a problem found?	—	Verify repair	Go to *Step 13*
11	Check the following items; 1. TP1and TP2 signal circuit or 5 volt reference circuit for a poor connection. 2. TP1 and TP2 signal circuit or 5 volt reference circuit for high resistance between the PCM and the TP1and TP2 sensor. 3. If a problem is found, repair wiring harness as necessary. Was a problem found?	—	Verify repair	Go to *Step 13*
12	Replace the TP sensor. Is the action complete?	—	Verify repair	—
13	Replace the PCM. **IMPORTANT:** The replacement PCM must be programmed. Refer to *ON-Vehicle Service in Power Control Module and Sensors for procedures.* And also refer to latest Service Bulletin. Check to see if the latest software is released or not. And then Down Load the LATEST PROGRAMMED SOFTWARE to the replasement PCM. Is the action complete?	—	Verify repair	—

Downloaded from www.Manualslib.com manuals search engine

Diagnostic Trouble Code (DTC)
P1516 Command - Actual TPS Correlation Error

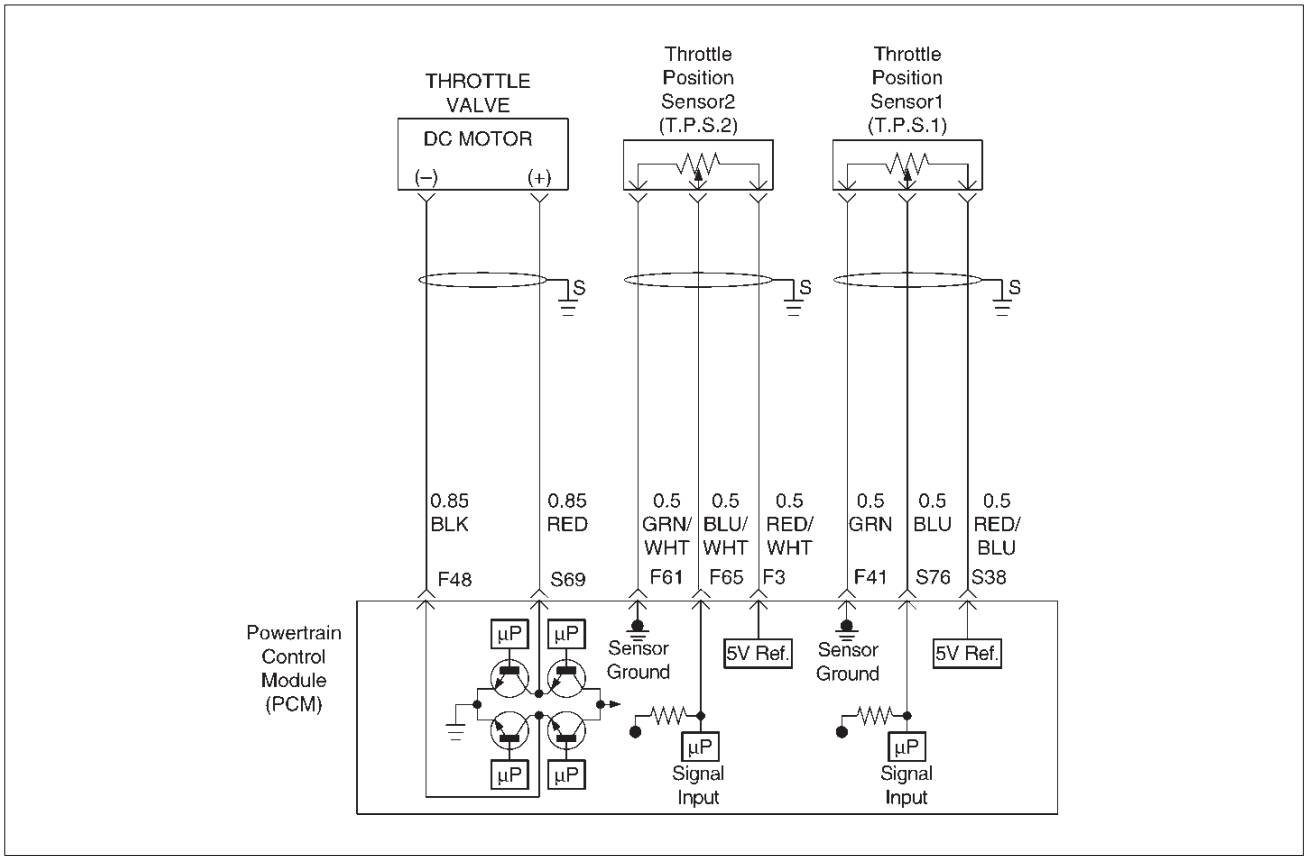

D06RY00088

Circuit Description

- The throttle position (TP) sensor circuit provides a voltage signal relative to throttle position (blade angle). The throttle blade angle will vary about 8 % at closed throttle to about 92 % at wide open throttle (WOT).
- The DC motor circuit provides a voltage signal relative to command throttle position (blade angle).
- This DTC detects the dufference between actual throttle position and command throttle position in steady state.

Conditions for setting the DTC

- The ignition is “ON”.
- Throttle Actuation mode is normal.
- Command Throttle position-Actual Throttle positionis less than 8 % when desird TPS is sutudy wihtin 0.5 %for 30 second within test samples (30 second)

Action Taken When the DTC Sets

- The PCM will illuminate the malfunction indicator lamp (MIL) the first time the fault is detected.
- The PCM calculates an air flow value based on idle air control valve position, throttle position, RPM and barometric pressure.
- The PCM will store condition which were present when the DTC was set as Freeze Frame and in the Failure Records data.

Conditions for Clearing the MIL/DTC

- The PCM will turn the MIL “OFF” on the third consecutive trip cycle during which the diagnostic has been run and the fault condtion is no longer present.
- A history DTC P1516 will clear after 40 cosecutive trip cycle during which the warm up cycles have occurred without a fault.
- DTC P1516 can be cleared using the Tech 2 “Clear Info” function or by disconnecting the PCM battery feed.

Diagnostic Aids

An intermittent may be caused by the following:

- Poor connectons.
- Mis routed harness.
- Rubbed through wire insulation.
- Broken wire inside the insulation.

Check for the following conditions:

- Poor connection at PCM-Inspect harness connectors for backed out terminals, improper mating, broken locks, improperly formed or damaged terminals, and poor terminal to wire connection.
- Damaged harness - Inspect the wiring harness for damage. If the harness appears to be OK, observe the TP sensor 1, TP sensor 2 display on the Tech2 while moving connectors and wiring harnesses related to the sensor.

Downloaded from www.Manualslib.com manuals search engine

A change in the display will indicate the location of the fault. If DTC P1516 cannot be duplicated, the information included in the Faillure Records data can be useful in determined vehicle mileage since the DTC was last set.

If it is determined that the DTC occurs intermittently, performing the DTC P1516 Diagnostic Chart may isolate the cause of the fault.

DTC P1516 - Command - Actual TPS Correlation Error

Step	Action	Value(s)	Yes	No
1	Was the “On-Board (OBD) System Check” performed?	—	Go to *Step 2*	Go to *OBD System Check*
2	Was the “Electric Throttle Control (ETC) System Check” performed?	—	Go to *Step 3*	Go to *ETC System Check*
3	1. Ignition “ON,” engine “OFF.” 2. Review and record Tech 2 Failure Records data. 3. Operate the vehicle within Failure Records conditions as noted. 4. Using a Tech 2, monitor “DTC” info for DTC P1516. Does the Tech 2 indicate DTC P1516 failed this ignition?	—	Go to *Step 4*	Refer to *Diagnostic Aids*
4	Observe the TP angle reading on the Tech 2 while slowly opening the throttle. Does the TP angle increase steadily and evenly from the closed throttle value to the wide open throttle value?	Closed throttle TP sensor 1 =8 ~ 10 % TP sensor 2 =90 ~ 92 % Wide open throttle TP sensor 1 =90 ~ 92 % TP sensor 2 =8 ~ 10 %	Go to *Step 8*	Go to *Step 5*
5	1. Ignition “OFF.” 2. Disconnect the DC motor. Is the DC motor reading near the specified value?	0.3 ~ 100 μ	Go to *Step 6*	Go to *Step 7*
6	Check the DC motor harness between the PCM and DC Motor circuit at the DC motor harness connector. Was a problem found?	—	Verify repair	Go to *Step 8*
7	Replace the DC motor. Is the action complete?	—	Verify repair	Go to *Step 6*
8	1. Disconnect the TP sensor. 2. Observe the TP sensor reading on the Tech2. Is the TP sensor reading near the specified value?	0V	Go to *Step 9*	Go to *Step 10*
9	1. Connect a test light between the 5Volt reference circuit and the TP1 and TP2 sensor signal circuit at the TP sensor harness connector. 2. Observe the TP sensor reading on the Tech 2. Is the TP sensor reading near the specified value?	5V	Go to *Step 12*	Go to *Step 11*

Downloaded from www.Manualslib.com manuals search engine

DTC P1516 - Command - Actual TPS Correlation Error (Cont'd)

Step	Action	Value(s)	Yes	No
10	Check the following items; 1. TP1 and TP2 signal circuit for a short to voltage. 2. TP1 and TP2 sensor ground circuit for high resistance between the PCM and the TP sensor. 3. TP1and TP2 sensor ground circuit for a poor connection. 4. If a problem is found, repair wiring harness as necessary. Was a problem found?	—	Verify repair	Go to *Step 13*
11	Check the following items; 1. TP1and TP2 signal circuit or 5 volt reference circuit for a poor connection. 2. TP1 and TP2 signal circuit or 5 volt reference circuit for high resistance between the PCM and the TP1 and TP2 sensor. 3. If a problem is found, repair wiring harness as necessary. Was a problem found?	—	Verify repair	Go to *Step 13*
12	Replace the TP sensor. Is the action complete?	—	Verify repair	—
13	Replace the PCM. **IMPORTANT:** The replacement PCM must be programmed. Refer to *ON-Vehicle Service in Power Control Module and Sensors for procedures.* And also refer to latest Service Bulletin. Check to see if the latest software is released or not. And then Down Load the LATEST PROGRAMMED SOFTWARE to the replasement PCM. Is the action complete?	—	Verify repair	—

Downloaded from www.Manualslib.com manuals search engine

Diagnostic Trouble Code (DTC) P1523 Actuator Control Return Performance

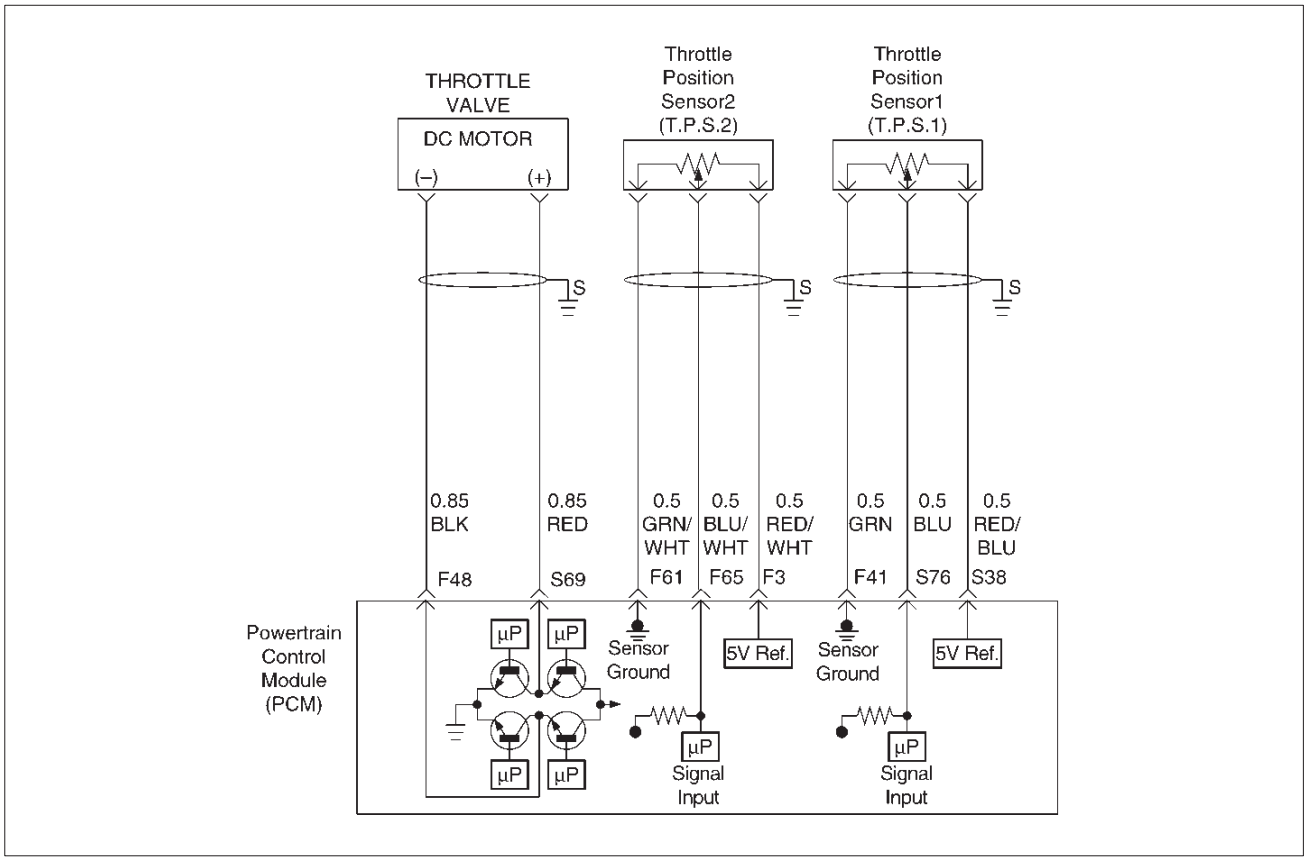

D06RY00088

Circuit Description

- The throttle position (TP) sensor circuit provides a voltage signal relative to throttle position (blade angle).

  The throttle blade angle will vary about 8 % at closed throttle to about 92 % at wide open throttle(WOT).
- The DC motor circuit provides a voltage signal relative to command throttle position (blade angle).
- This DTC ditects if the throttle return to the default position at key on, steady state.

Conditions for setting the DTC

- The ignition is “ON”.
- Normalized TPS is less than 0 % but Normalized TPS is more than 25 %.

Action Taken When the DTC Sets

- The PCM will store condition which were present when the DTC was set as Freeze Frame and in the Failure Records data.

Conditions for Clearing the MIL/DTC

- The PCM will turn the MIL “OFF” on the third consecutive trip cycle during which the diagnostic has been run and the fault condtion is no longer present.
- A history DTC P1523 will clear after 40 cosecutive trip cycle during which the warm up cycles have occurred without a fault.
- DTC P1523 can be cleared using the Tech 2 “Clear Info” function or by disconnecting the PCM battery feed.

Diagnostic Aids

An intermittent may be caused by the following:

- Poor connectons.
- Mis routed harness.
- Rubbed through wire insulation.
- Broken wire inside the insulation.

Check for the following conditions:

- Poor connection at PCM-Inspect harness connectors for backed out terminals, improper mating, broken locks, improperly formed or damaged terminals, and poor terminal to wire connection.
- Damaged harness-Inspect the wiring harness for damage. If the harness appears to be OK, observe the TP sensor 1, TP sensor 2 display on the Tech 2 while moving connectors and wiring harnesses related to the sensor.

  A change in the display will indicate the location of the fault. If DTC P1523 cannot be duplicated, the information included in the Faillure Records data can be useful in determined vehicle mileage since the DTC was last set.

  If it is determined that the DTC occurs intermittently, performing the DTC P1523 Diagnostic Chart may isolate the cause of the fault.

Downloaded from www.Manualslib.com manuals search engine

DTC P1523 - Actuator Control Return Performance

Step	Action	Value(s)	Yes	No
1	Was the “On-Board (OBD) System Check” performed?	—	Go to *Step 2*	Go to *OBD System Check*
2	Was the “Electric Throttle Control (ETC) System Check” performed?	—	Go to *Step 3*	Go to *ETC System Check*
3	Observe the TP angle reading on the Tech 2 while slowly opening the throttle. Does the TP angle increase steadily and evenly from the closed throttle value to the wide open throttle value?	Closed throttle TP sensor 1 =8 ~ 10 % TP sensor 2 =90 ~ 92 % Wide open throttle TP sensor 1 =90 ~ 92 % TP sensor 2 =8 ~ 10 %	Go to *Step 7*	Go to *Step 4*
4	1. Ignition “OFF.” 2. Disconnect the DC motor. Is the DC motor reading near the specified value?	0.3 ~ 100 μ	Go to *Step 5*	Go to *Step 6*
5	Check the DC motor harness between the PCM and DC Motor circuit at the DC motor harness connector. Was a problem found?	—	Verify repair	Go to *Step 7*
6	Replace the DC motor. Is the action complete?	—	Verify repair	Go to *Step 5*
7	1. Disconnect the TP sensor. 2. Observe the TP sensor reading on the Tech 2. Is the TP sensor reading near the specified value?	0V	Go to *Step 8*	Go to *Step 9*
8	1. Connect a test light between the 5Volt reference circuit and the TP1 and TP2 sensor signal circuit at the TP sensor harness connector. 2. Observe the TP sensor reading on the Tech 2. Is the TP sensor reading near the specified value?	5V	Go to *Step 11*	Go to *Step 10*
9	Check the following items; 1. TP1 and TP2 signal circuit for a short to voltage. 2. TP1 and TP2 sensor ground circuit for high resistance between the PCM and the TP sensor. 3. TP1and TP2 sensor ground circuit for a poor connection. 4. If a problem is found, repair wiring harness as necessary. Was a problem found?	—	Verify repair	Go to *Step 12*

Downloaded from www.Manualslib.com manuals search engine

DTC P1523 - Actuator Control Return Performance (Cont'd)

Step	Action	Value(s)	Yes	No
10	Check the following items; 1. TP1and TP2 signal circuit or 5 volt reference circuit for a poor connection. 2. TP1 and TP2 signal circuit or 5 volt reference circuit for high resistance between the PCM and the TP1and TP2 sensor. 3. If a problem is found, repair wiring harness as necessary. Was a problem found?	—	Verify repair	Go to *Step 12*
11	Replace the TP sensor. Is the action complete?	—	Verify repair	—
12	Replace the PCM. **IMPORTANT:** The replacement PCM must be programmed. Refer to *ON-Vehicle Service in Power Control Module and Sensors for procedures.* And also refer to latest Service Bulletin. Check to see if the latest software is released or not. And then Down Load the LATEST PROGRAMMED SOFTWARE to the replasement PCM. Is the action complete?	—	Verify repair	—

Downloaded from www.Manualslib.com manuals search engine

Diagnostic Trouble Code (DTC) P1625 PCM Unexpected Reset

Circuit Description

The powertrain control module (PCM) monitors unexpected PCM reset. This will not turn on MIL light on, only records code DTC P1625.

Conditions for Setting the DTC

- Clock or COP (Computer Operating Properly) reset.

Action Taken When the DTC Sets

- The PCM will not illuminate the malfunction indicator lamp (MIL).
- The PCM will store conditions which were present when the DTC was set as Failure Records only. This information will not be stored as Freeze Frame data.

Conditions for Clearing the MIL/DTC

- The PCM will turn the MIL “OFF” on the third consecutive trip cycle during which the diagnostic has been run and the fault condition is no longer present.
- A history DTC P1625 will clear after 40 consecutive warm-up cycles have occurred without a fault.
- DTC P1625 can be cleared by using the Tech 2 “Clear Info” function or by disconnecting the PCM battery feed.

Diagnostic Aids

Check for the following conditions:

- P1625 alone stored does not need diagnosis. Clear DTC code.

DTC P1625 – PCM Unexpected Reset

Step	Action	Value(s)	Yes	No
1	Was the “On-Board Diagnostic (OBD) System Check” performed?	—	Go to Step 2	Go to *OBD System Check*
2	1. Ignition is “ON”. 2. Install the Tech 2. 3. Start the engine at let it Idle. 4. On the Tech 2, select “DTC info”. Does the Tech 2 indicate DTC P1625 failed?	—	Go to *Step 3*	Go to *Diagnostic Aids*
3	1. Ignition is “ON”. 2. Clear DTC P1625 by using the Tech 2 “Clear Info”. 3. Start the engine at let it Idle. 4. On the Tech 2, select “DTC info”. Does the Tech 2 indicate DTC P1625 failed?	—	Go to *Step 4*	Go to *Diagnostic Aids*
4	1. Check for aftermarket electronics, such as transceiver, stereos, and anti theft devices. They may radiate EMI into the control system if they are improperly installed. (This may cause a false sensor reading and turn on the MIL.) 2. If a problem is found, repair as necessary. Was a problem found?	—	Verify repair	—

Downloaded from www.Manualslib.com manuals search engine

Diagnostic Trouble Code (DTC) P1635 Reference Voltage # 1 Circuit Fault

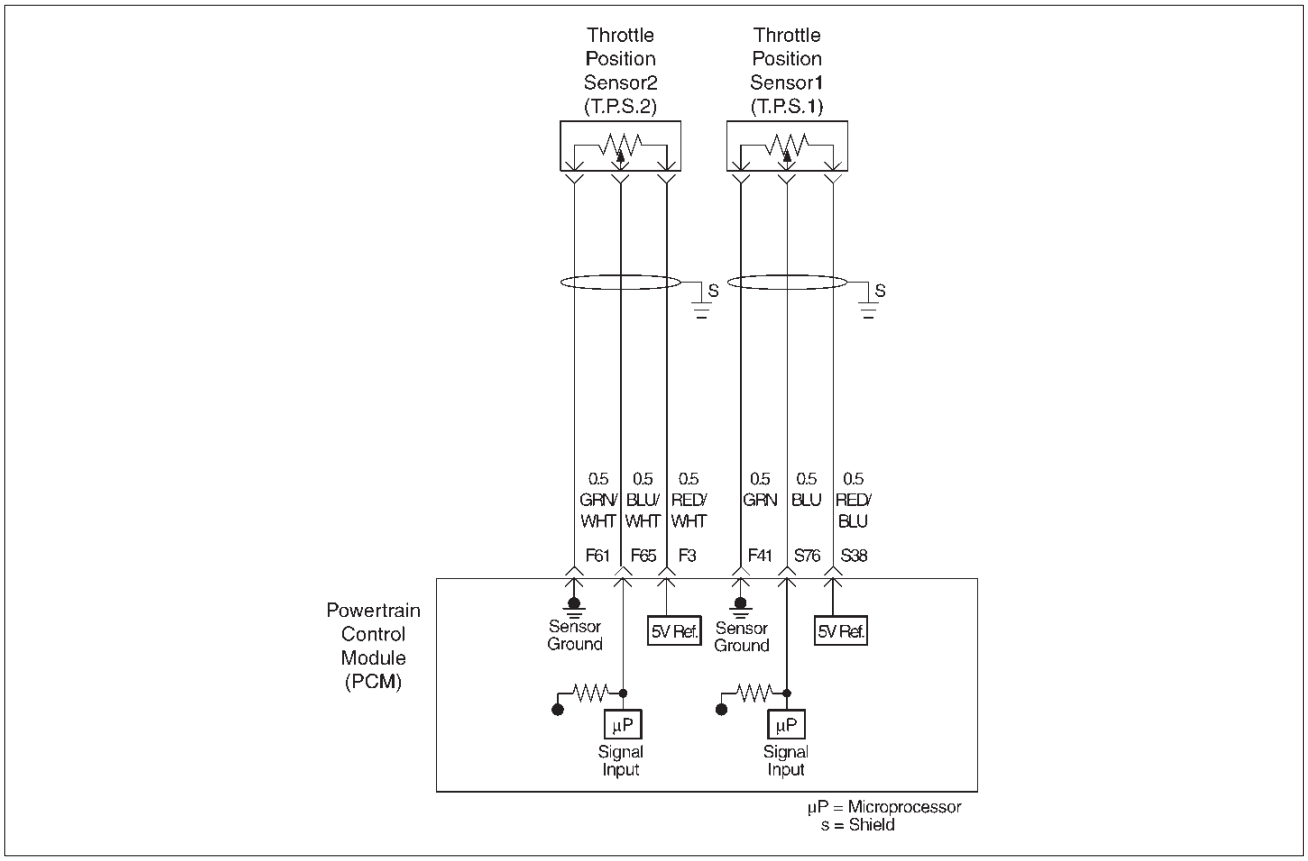

D06RY00077

Circuit Description

The TP sensor # 1 shares a 5 Volt reference with the PCM.

If the PCM detects the 5 Volt reference for the TP sensor # 1 is failure, DTCP1635 will be set.

Conditions for setting the DTC

- The ignition is “ON”.
- The 5 Volt reference voltage for the TP sensor # 1 is less than 4 volts.
- The 5 Volt reference voltage for the TP sensor # 1 is more than 5 volts.

Action Taken When the DTC Sets

- The PCM will not illuminate the malfunction indicator lamp (MIL) .
- The PCM will store condition which were present when the DTC was set as Freeze Frame and in the Failure Records data.

Conditions for Clearing the MIL/DTC

- The PCM will turn the MIL “OFF” on the third consecutive trip cycle during which the diagnostic has been run and the fault condtion is no longer present.
- A history DTC P1635will clear after 40 cosecutive trip cycle during which the warm up cycles have occurred without a fault.
- DTC P1635 can be cleared using the Tech 2 “Clear Info” function or by disconnecting the PCM battery feed. Tech2 “ Clear Info” function or by disconnecting the PCM battery feed.

Downloaded from www.Manualslib.com manuals search engine

Diagnostic Trouble Code (DTC) P1635 Reference Voltage # 1 Circuit Fault

Step	Action	Value(s)	Yes	No
1	Was the “On-Board(OBD)System Check” performed?	—	Go to *Step 2*	Go to *OBD System Check*
2	1. Ignition “ON”, engine not running. 2. Using a DVM at the PCM side of the connector, check the votage at terminal S38 (RED/BLU) pin. Is the voltage in specified range?	4.95 – 5.0V	Go to *ETC System Check*	Go to *Step 3*
3	1. Ignition “ON”, engine not running. 2. Using a DVM at the PCM side of the connector, check the votage at terminal F20 (WHT) pin. Is the voltage in specified range?	11.6 – 12.7V	Go to *Step 4*	Go to *Step 5*
4	1. Ignition “ON”, engine not running. 2. Using a DVM at the PCM side of the connector, check the votage at terminal F57 (WHT) pin. Is the voltage in specified range?	11.6 – 12.7V	Go to *Step 6*	Go to *Step 5*
5	Observe the battery voltage and circuit. If the probrem found, repair it as necessary. Was the probrem found?	—	Verify repair	Go to *Step 6*
6	Replace the PCM. **IMPORTANT:** The replacement PCM must be programmed. Refer to *ON-Vehicle Service in Power Control Module and Sensors for procedures.* And also refer to latest Service Bulletin. Check to see if the latest software is released or not. And then Down Load the LATEST PROGRAMMED SOFTWARE to the replacement PCM. Is the action complete?	—	Verify repair	—

Downloaded from www.Manualslib.com manuals search engine

Diagnostic Trouble Code (DTC) P1639 Reference Voltage # 2 Circuit Fault

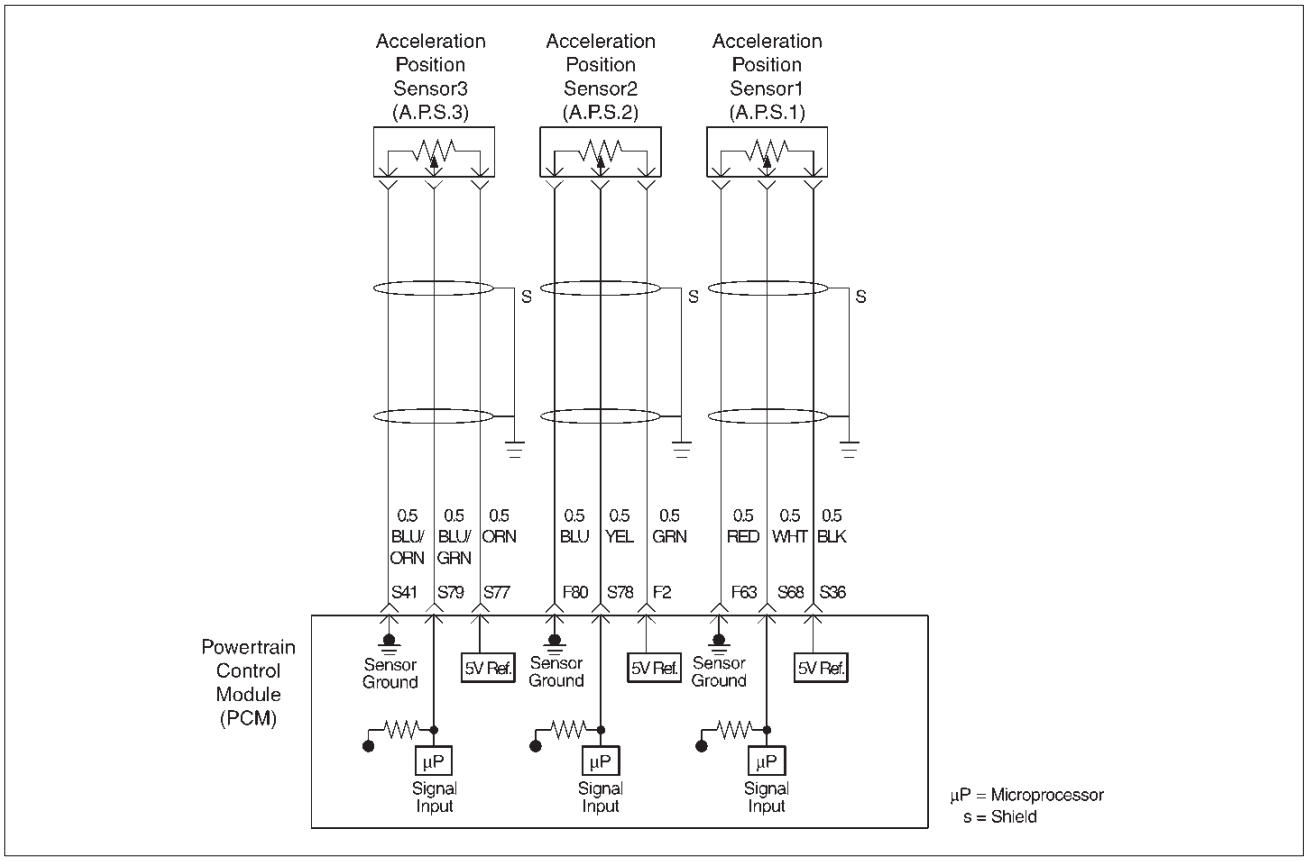

Circuit Description

The AP sensor # 1shares a 5Volt reference with the PCM. If the PCM detects the 5 Volt reference for the AP sensor # 1 is failure, DTC P1635 will be set.

Conditions for setting the DTC

- The ignition is “ON”.
- The 5 Volt reference voltage for the AP sensor # 1 is less than 4 volts.
- The 5 Volt reference voltage for the AP sensor # 1 is more than 5 volts.

Action Taken When the DTC Sets

- The PCM will not illuminate the malfunction indicator lamp (MIL).
- The PCM will store condition which were present when the DTC was set as Freeze Frame and in the Failure Records data.

Conditions for Clearing the MIL/DTC

- The PCM will turn the MIL “OFF” on the third consecutive trip cycle during which the diagnostic has been run and the fault condtion is no longer present.
- A history DTC P1639 will clear after 40 cosecutive trip cycle during which the warm up cycles have occurred without a fault.
- DTC P1639 can be cleared using the Tech 2 “Clear Info” function or by disconnecting the PCM battery feed. Tech 2 “Clear Info” function or by disconnecting the PCM battery feed.

Downloaded from www.Manualslib.com manuals search engine

Diagnostic Trouble Code (DTC) P1639 Reference Voltage # 2 Circuit Fault

Step	Action	Value(s)	Yes	No
1	Was the “On-Board (OBD) System Check” performed?	—	Go to *Step 2*	Go to *OBD System Check*
2	1. Ignition “ON”, engine not running. 2. Using a DVM at the PCM side of the connector, check the votage at terminal S36 (BLK) pin. Is the voltage in specified range?	4.95 – 5.0V	Go to *ETC System Check*	Go to *Step 3*
3	1. Ignition “ON”, engine not running. 2. Using a DVM at the PCM side of the connector, check the votage at terminal F20(WHT) pin. Is the voltage in specified range?	11.6 – 12.7V	Go to *Step 4*	Go to *Step 5*
4	1. Ignition “ON”, engine not running. 2. Using a DVM at the PCM side of the connector, check the votage at terminal F57 (WHT) pin. Is the voltage in specified range?	11.6 – 12.7V	Go to *Step 6*	Go to *Step 5*
5	Observe the battery voltage and circuit. If the probrem found, repair it as necessary. Was the probrem found?	—	Verify repair	Go to *Step 6*
6	Replace the PCM. **IMPORTANT:** The replacement PCM must be programmed. Refer to *ON-Vehicle Service in Power Control Module and Sensors for procedures.* And also refer to latest Service Bulletin.Check to see if the latest software is released or not. And then Down Load the LATEST PROGRAMMED SOFTWARE to the replasement PCM. Is the action complete?	—	Verify repair	—

Downloaded from www.Manualslib.com manuals search engine

Diagnostic Trouble Code (DTC) P1640 Driver-1-Output Circuit Fault (ODM)

Circuit Description

Output driver modules (ODMs) are used by the powertrain control module (PCM) to turn “ON” many of the current-driven devices that are needed to control various engine and transmission functions. Each ODM is capable of controlling up to 7 separate outputs by applying ground to the device which the PCM is commanding “ON.”

Unlike the Quad Driver Modules (QDMs) used in prior model years, ODMs have the capability of diagnosing each output circuit individually. DTC P1640 set indicates an improper voltage level has been detected on an ODM output.

Since A/C is an option, No A/C will cause the air conditioning clutch relay output to always fail. If a fault is seen on the air conditioning clutch relay output, it will not be logged as a fault until the A/C request input interrupts a high voltage, indicating that A/C has been installed.

Conditions for Setting the DTC

- Ignition “ON.”
- Engine running.
- No DTC 1618.
- Ignition voltage is above 13.2 volts for 4 seconds.
- Output voltage does not equal ignition voltage when output is “OFF” or output voltage is not less than 1 volt when output is “ON.”
- Above conditions occur for at least 1 second.

Action Taken When the DTC Sets

- The PCM will not illuminate the malfunction indicator lamp (MIL).
- The PCM will store conditions which were present when the DTC was set as Failure Records only. This information will not be stored as Freeze Frame data.

Conditions for Clearing the MIL/DTC

- A history DTC P1640 will clear after 40 consecutive warm-up cycles occur without a fault.
- DTC P1640 can be cleared by using the Tech 2 “Clear Info” function or by disconnecting the PCM battery feed.

Diagnostic Aids

Check for the following conditions:

- Poor connection at PCM – Inspect harness connectors for backed-out terminals, improper mating, broken locks, improperly formed or damaged terminals, and poor terminal-to-wire connection.
- Damaged harness – Inspect the wiring harness for damage, If the harness appears to be OK, disconnect the PCM, turn the ignition “ON” and observe a voltmeter connected to the suspect driver circuit at the PCM harness connector while moving connectors and wiring harnesses relates to the MIL. A change in voltage will indicate the location of the fault.
- Poor connection at component – Examine for damaged connectors, unplugged connector, or damaged terminals at the following locations: Instrument cluster harness, canister purge solenoid, A/C clutch relay. An open ignition feed circuit at any of these components will cause DTC P1640 to be set.

Reviewing the Failure Records vehicle mileage since the diagnostic test last failed may help determine how often the condition that caused the DTC to be set occurs. This may assist in diagnosing the condition.

Test Description

Number(s) below refer to the step number(s) on the Diagnostic Chart.

4. The Tech 2 Driver Module Status indicates the PCM pin that is affected.

9. The Tech 2 may indicate “short circuit” even when the problem is an open circuit. The cause of an open circuit may be in the component itself-lamp, purge, solenoid, or A/C compressor relay.

11. A short to ground on the ignition side of the component will blow the fuse. Since the fuse was checked in Step 2, a short to ground would be between the affected component and the PCM.

Downloaded from www.Manualslib.com manuals search engine

DTC P1640 – Driver-1-Output Circuit Fault (ODM)

Step	Action	Value(s)	Yes	No
1	Was the “On-Board Diagnostic (OBD) System Check” performed?	—	Go to *Step 2*	Go to *OBD System Check*
2	Check the fuse for the driver circuit that was shown as faulty. Was the fuse blown?	—	Go to *Step 3*	Go to *Step 4*
3	1. Check for a short to ground between the fuse and the affected component. 2. Replace the fuse after making any necessary repairs. Is the action complete?	—	Verify repair	—
4	Disconnect the PCM connector for the affected driver circuit. Is there any damage to the PCM pin or connector?	—	Go to *Step 5*	Go to *Step 6*
5	Repair the damaged pin or terminal. Is the action complete?	—	Verify repair	—
6	Were either of the lamp circuits for “Check Engine” or “Check Trans.” indicated as faulty by the Tech 2?	—	Go to *Step 7*	Go to *Step 13*
7	1. Leave the PCM connector for the lamp driver circuit disconnected. 2. Ignition “ON.” 3. Using a DVM, check the voltage at the PCM connector for the affected lamp driver circuit. Was the voltage equal to the specified value?	B+	Go to *Step 15*	Go to *Step 8*
8	1. Ignition “ON.” 2. Check for battery voltage at the fuse for the affected lamp circuit. Was battery voltage available at the fuse?	—	Go to *Step 10*	Go to *Step 9*
9	Repair the open circuit between the ignition switch and the fuse. Is the action complete?	—	Verify repair	—
10	1. Ignition “OFF.” 2. Disconnect the PCM connector for the affected driver terminal. 3. Connect an ohmmeter between a good ground and the PCM connector for the affected driver. Did the ohmmeter indicate continuity?	—	Go to *Step 11*	Go to *Step 12*
11	Repair the short to ground between the affected component and its PCM driver terminal. Is the action complete?	—	Verify repair	—
12	Repair the open circuit between the fuse and the PCM driver terminal for the affected circuit. Is the action complete?	—	Verify repair	—

Downloaded from www.Manualslib.com manuals search engine

DTC P1640 – Driver-1-Output Circuit Fault (ODM) (Cont'd)

Step	Action	Value(s)	Yes	No
13	1. Connect the PCM. 2. Start the engine and let it idle. 3. Backprobe the affected terminal at the PCM with a DVM. Was the voltage equal to the specified value?	+B	Go to *Step 15*	Go to *Step 14*
14	1. Run the engine at idle. 2. Check for battery voltage at the fuse for the affected circuit. Was battery voltage available at the fuse?	—	Go to *Step 10*	Go to *Step 9*
15	Replace the PCM. **IMPORTANT:** The replacement PCM must be programmed. Refer to *On-Vehicle Service* in *Powertrain Control Module and Sensors* for procedures. And also refer to latest Service Bulletin. Check to see if the Latest software is released or not. And then Down Load the LATEST PROGRAMMED SOFTWARE to the replacement PCM. Is the action complete?	—	Verify repair	—

Downloaded from www.Manualslib.com manuals search engine

Diagnostic Trouble Code (DTC) P1650 Quad Driver Module “A” Fault

Circuit Description

The Quad Driver Module (QDMs) are used by the powertrain control module (PCM) to turn “ON” current–driven devices that are needed to control two engine functions. The PCM monitors open or short circuit of either of Canister Control Purge (CCP) Vent solenoid or Variable Intake Manifold (VIM).

Conditions for Setting the DTC

- Ignition “ON”.
- Engine running.
- Ignition voltage.
- Output voltage does not equal voltage is not less than 1 volt when out put is “ON”.
- Above conditions occur for at least 0.5 second.

Action Taken When the DTC Sets

- The PCM will not illuminate the malfunction indicator lamp (MIL).
- The PCM will store conditions which were present when the DTC was set as Failure Records only. This information will not be stored as Freeze Frame data.

Conditions for Clearing the MIL/DTC

- The PCM will turn the MIL “OFF” on the third consecutive trip cycle during which the diagnostic has been run and the fault condition is no longer present.
- A history DTC P1650 will clear after 40 consecutive warm-up cycles have occurred without a fault.
- DTC P1650 can be cleared by using the Tech 2 “Clear Info” function or by disconnecting the PCM battery feed.

Diagnostic Aids

Check for the following conditions:

- Poor connection at PCM – Inspect harness connectors for backed-out terminals, improper mating, broken locks, improperly formed or damaged terminals, and poor terminal-to-wire connection.
- Damaged harness – Inspect the wiring harness for damage, If the harness appears to be OK, disconnect the PCM, turn the ignition “ON” and observe a voltmeter connected to the suspect driver circuit at the PCM harness connector while moving connectors and wiring harnesses relates to the MIL. A change in voltage will indicate the location of the fault.
- Poor connection at component – Examine for damaged connectors, unplugged connector, or damaged terminals at the following locations: canister purge solenoid, fuel level sensor. An open ignition feed circuit at any of these components will cause DTC P1650 to be set.

Reviewing the Failure Records vehicle mileage since the diagnostic test last failed may help determine how often the condition that caused the DTC to be set occurs. This may assist in diagnosing the condition.

The following PCM pins are controlled by Quad driver modules (QDMs):

- S74 – VIM
- S7 – Canister control purge

Test Description

Number(s) below refer to the step number(s) on the Diagnostic Chart.

4. The Tech 2 Driver Module Status indicates the PCM pin that is affected.

9. The Tech 2 may indicate “short circuit” even when the problem is an open circuit. The cause of an open circuit may be in the component itself.

11. A short to ground on the ignition side of the component will blow the fuse. Since the fuse was checked in Step 2, a short to ground would be between the affected component and the PCM.

Downloaded from www.Manualslib.com manuals search engine

DTC P1650 – Quad Driver Module (QDM) Fault

Step	Action	Value(s)	Yes	No
1	Was the “On-Board Diagnostic (OBD) System Check” performed?	—	Go to *Step 2*	Go to *OBD System Check*
2	Check the fuse for the driver circuit that was shown as faulty. Was the fuse blown?	—	Go to *Step 5*	Go to *Step 6*
3	1. Check for a short to ground between the fuse and the affected component. 2. Replace the fuse after making any necessary repairs. Is the action complete?	—	Verify repair	—
4	Disconnect the PCM connector for the affected driver circuit. Is there any damage to the PCM pin or connector?	—	Go to *Step 5*	Go to *Step 6*
5	Repair the damaged pin or terminal. Is the action complete?	—	Verify repair	—
6	Were either of the lamp circuits for “Check Engine” or “Check Trans.” indicated as faulty by the Tech 2?	—	Go to *Step 7*	Go to *Step 13*
7	1. Leave the PCM connector for the lamp driver circuit disconnected. 2. Ignition “ON.” 3. Using a DVM, check the voltage at the PCM connector for the affected lamp driver circuit. Was the voltage equal to the specified value?	B+	Go to *Step 15*	Go to *Step 8*
8	1. Ignition “ON.” 2. Check for battery voltage at the fuse for the affected lamp circuit. Was battery voltage available at the fuse?	—	Go to *Step 10*	Go to *Step 9*
9	Repair the open circuit between the ignition switch and the fuse. Is the action complete?	—	Verify repair	—
10	1. Ignition “OFF.” 2. Disconnect the PCM connector for the affected driver terminal. 3. Connect an ohmmeter between a good ground and the PCM connector for the affected driver. Did the ohmmeter indicate continuity?	—	Go to *Step 11*	Go to *Step 12*
11	Repair the short to ground between the affected component and its PCM driver terminal. Is the action complete?	—	Verify repair	—
12	Repair the open circuit between the fuse and the PCM driver terminal for the affected circuit. Is the action complete?	—	Verify repair	—

Downloaded from www.Manualslib.com manuals search engine

DTC P1650 – Quad Driver Module (QDM) Fault (Cont'd)

Step	Action	Value(s)	Yes	No
13	1. Connect the PCM. 2. Start the engine and let it idle. 3. Backprobe the affected terminal at the PCM with a DVM. Was the voltage equal to the specified value?	+B	Go to *Step 15*	Go to *Step 14*
14	1. Run the engine at idle. 2. Check for battery voltage at the fuse for the affected circuit. Was battery voltage available at the fuse?	—	Go to *Step 10*	Go to *Step 9*
15	Replace the PCM. **IMPORTANT:** The replacement PCM must be programmed. Refer to *On-Vehicle Service* in *Powertrain Control Module and Sensors* for procedures. And also refer to latest Service Bulletin. Check to see if the Latest software is released or not. And then Down Load the LATEST PROGRAMMED SOFTWARE to the replacement PCM. Is the action complete?	—	Verify repair	—

Downloaded from www.Manualslib.com manuals search engine

Symptom Diagnosis

Preliminary Checks

Before using this section, perform the "On-Board Diagnostic (OBD) System Check" and verify all of the following items:

- The powertrain control module (PCM), and malfunction indicator lamp (MIL) (Check Engine lamp) and Reduced Power Lamp (RPL) are operating correctly.
- There are no DTC(s) stored.
- Tech 2 data is within normal operating range. Refer to *Typical Scan Data Values*.
- Verify the customer complaint and locate the correct symptom in the table of contents. Perform the procedure included in the symptom chart.

Visual/Physical Check

Several of the symptom procedures call for a careful visual/physical check. This can lead to correcting a problem without further checks and can save valuable time.

This check should include the following items:

- PCM grounds for cleanliness, tightness and proper location.
- Vacuum hoses for splits, kinks, and proper connections, as shown on the "Vehicle Emission Control Information" label. Check thoroughly for any type of leak or restriction.
- Air intake ducts for collapsed or damaged areas.
- Air leaks at throttle body mounting area, mass air flow (MAF) sensor and intake manifold sealing surfaces.
- Ignition components for cracking, hardness, and carbon tracking.
- Wiring for proper connections, pinches and cuts.

Intermittents

IMPORTANT: An intermittent problem may or may not turn on the malfunction indicator lamp (MIL) or store a DTC. DO NOT use the Diagnostic Trouble Code (DTC) charts for intermittent problems. The fault must be present to locate the problem.

Most intermittent problems are caused by faulty electrical connections or wiring. Perform a careful visual/physical check for the following conditions:

- Poor mating of the connector halves or a terminal not fully seated in the connector (backed out).
- Improperly formed or damaged terminal.
- All connector terminals in the problem circuit should be carefully checked for proper contact tension.
- Poor terminal-to-wire connection. This requires removing the terminal from the connector body to check.

Road test the vehicle with a J 39200 Digital Multimeter connected to a suspected circuit. An abnormal voltage when the malfunction occurs is a good indication that there is a fault in the circuit being monitored.

Use a Tech 2 to help detect intermittent conditions. The scan tool has several features that can be used to locate an intermittent condition. Use the following feature to find intermittent faults:

- Using a Tech 2's "Freeze Frame" buffer or "Failure Records" buffer can aid in locating an intermittent condition. Review and record the information in the freeze frame or failure record associated with the intermittent DTC being diagnosed. The vehicle can be driven within the conditions that were present when the DTC originally set.

To check for loss of diagnostic code memory, disconnect the MAP sensor and idle the engine until the MIL (Check Engine lamp) comes on. DTC P0107 should be stored and kept in memory when the ignition is turned "OFF." If not, the PCM is faulty. When this test is completed, make sure that you clear the DTC P0107 from memory.

An intermittent MIL (Check Engine lamp) with no stored DTC may be caused by the following:

- Ignition coil shorted to ground and arcing.
- MIL (Check Engine lamp) wire to PCM shorted to ground.
- Poor PCM grounds. Refer to the PCM wiring diagrams.

Check for improper installation of electrical options such as lights, cellular phones, etc. Check all wires from the PCM to the ignition coils for poor connections.

Check for an open diode across the A/C compressor clutch and check for other open diodes (refer to wiring diagrams in *Electrical Diagnosis*).

If problem has not been found, refer to *PCM Connector Symptom* tables.

- Check the "Calibration ID" of the PCM, and compare it with the latest Isuzu service bulletins and/or Isuzu EEPROM reprogramming equipment to determine if an update to the PCM's reprogrammable memory has been released. To check the "Calibration ID", connect the Tech 2, then look for "Powertrain", then select "Calibration ID". This identifies the contents of the reprogrammable software and calibration contained in the PCM. If the "Calibration ID" is not the most current available, it is advisable to reprogram the PCM's EEPROM memory, which may either help identify a hard-to-find problem or may fix the problem.
- Calibration ID (example)

Part number	9377709
Broadcast Code	CYYD
Identifier	801

Downloaded from www.Manualslib.com manuals search engine

Hard Start Symptom

Step	Action	Value(s)	Yes	No
1	**DEFINITION:** Engine cranks, but does not start for a long time. Does eventually run, or may start but immediately stalls. Was the "On-Board Diagnostic (OBD) System Check" performed?	—	Go to *Step 2*	Go to *OBD System Check*
2	Was the "Electric Throttle Control (ETC) System Check" performed?	—	Go to *Step 3*	Go to *ETC System Check*
3	1. Perform a bulletin search. 2. If a bulletin that addresses the symptom is found, correct the condition as instructed in the bulletin. Was a bulletin found that addresses the symptom?	—	Verify repair	Go to *Step 4*
4	Was a visual/physical check performed?	—	Go to *Step 5*	Go to *Visual/Physical Check*
5	Check engine coolant temperature (ECT) sensor for shift in value. After 8 hours with the hood up and the engine not running, connect the Tech 2. With the ignition "ON" and the engine not running, compare engine coolant temperature to intake air temperature. Are ECT and IAT within the specified value of each other?	± 5°C (± 9°F)	Go to *Step 10*	Go to *Step 6*
6	1. Using a Tech 2, display the engine coolant temperature and note the value. 2. Check the resistance of the engine coolant temperature sensor. 3. Refer to *Engine Coolant Temperature Sensor Temperature vs. Resistance* chart on *DTC P0118 Diagnostic Support* for resistance specifications. Is the resistance value near the resistance for the temperature noted?	—	Go to *Step 8*	Go to *Step 7*
7	Replace the ECT sensor. Is the action complete?	—	Verify repair	—
8	Locate and repair high resistance or poor connection in the ECT signal circuit or the ECT sensor ground. Is the action complete?	—	Verify repair	—
9	1. Check for a faulty, plugged, or incorrectly installed PCV valve. 2. If a problem is found, repair as necessary. Was a problem found?	—	Verify repair	Go to *Step 10*
10	1. Check for water- or alcohol-contaminated fuel. 2. If a problem is found, repair as necessary. Was a problem found?	—	Verify repair	Go to *Step 11*
11	1. Perform the procedure in *Fuel System Pressure Test*. 2. If a problem is found, repair as necessary. Was a problem found?	—	Verify repair	Go to *Step 12*

Downloaded from www.Manualslib.com manuals search engine

Hard Start Symptom (Cont'd)

Step	Action	Value(s)	Yes	No
12	1. Check for proper ignition voltage output with spark tester J 26792 (ST-125). Refer to *Electric Ignition System* for procedure. 2. If a problem is found, repair as necessary. Was a problem found?	—	Verify repair	Go to *Step 13*
13	1. Remove spark plugs. Check for wet plugs, cracks, wear, improper gap, burned electrodes, or heavy deposits. Refer to *Electronic Ignition System*. NOTE: If spark plugs are gas or oil fouled, the cause of the fouling must be determined before replacing the spark plugs. 2. If a problem is found, repair as necessary. Was a problem found?	—	Verify repair	Go to *Step 14*
14	1. Check for a loose ignition coil ground and ION Sensing module circuit. 2. If a problem is found, repair as necessary. Was a problem found?	—	Verify repair	Go to *Step 15*
15	1. Remove the ignition coils and check the ignition coils for cracks or carbon tracking. 2. If a problem is found, replace affected coil(s) as necessary. Was a problem found?	—	Verify repair	Go to *Step 16*
16	1. Check for the following engine mechanical problems (refer to *Engine Mechanical*): • Low compression • Leaking cylinder head gaskets • Worn or incorrect camshaft • Camshaft drive belt slipped or stripped 2. If a problem is found, repair as necessary. Was a problem found?	—	Verify repair	Go to *Step 17*
17	1. Review all diagnostic procedures within this table. 2. If all procedures have been completed and no malfunctions have been found, review/inspect the following: • Visual/physical inspection • Tech 2 data • Freeze Frame data/Failure Records buffer • All electrical connections within a suspected circuit and/or system. 3. If a problem is found, repair as necessary. Was a problem found?	—	Verify repair	Contact Technical Assistance

Downloaded from www.Manualslib.com manuals search engine

Surges and/or Chuggles Symptom

Step	Action	Value(s)	Yes	No
1	**DEFINITION:** Engine power variation under steady throttle or cruise. Feels like the vehicle speeds up and slows down with no change in the accelerator pedal. Was the "On-Board Diagnostic (OBD) System Check" performed?	—	Go to *Step 2*	Go to *OBD System Check*
2	Was the "Electric Throttle Control (ETC) System Check" performed?	—	Go to *Step 3*	Go to *ETC System Check*
3	1. Perform a bulletin search. 2. If a bulletin that addresses the symptom is found, correct the condition as instructed in the bulletin. Was a bulletin found that addresses the symptom?	—	Verify repair	Go to *Step 4*
4	Was a visual/physical check performed?	—	Go to *Step 5*	Go to *Visual/Physical Check*
5	Be sure that the driver understands transmission torque converter clutch and A/C compressor operation as explained in the owner's manual. Inform the customer how the TCC and the A/C clutch operate. Is the customer experiencing a normal condition?	—	System OK	Go to *Step 6*
6	1. Check the the fuel control heated oxygen sensors (HO2S, B1S1 and B2S1). The fuel control heated oxygen sensors (HO2S) should respond quickly to different throttle positions. If they don't, check them for silicone or other contaminants from fuel or use of improper RTV sealant. The sensors may have a white powdery coating. Silicon contamination causes a high but false HO2S signal voltage (rich exhaust indication). The PCM will then reduce the amount of fuel delivered to the engine, causing a severe driveability problem. For more information, refer to *Powertrain Control Module (PCM) and Sensors*. 2. If a problem is found, repair as necessary. Was a problem found?	—	Verify repair	Go to *Step 7*
7	1. Check the fuel pressure. Refer to *Fuel System Pressure Test*. 2. If a problem is found, repair as necessary. Was a problem found?	—	Verify repair	Go to *Step 8*
8	Monitor the long term fuel trim on the Tech 2. Is the long term fuel trim significantly in the negative range (rich condition)?	—	Go to *Step 9*	Go to *Step 10*
9	1. Check items that can cause the engine to run rich. Refer to *Diagnostic Aids* in *DTC P0172 Diagnostic Support*. 2. If a problem is found, repair as necessary. Was a problem found?	—	Go to *Step 11*	Verify repair

Downloaded from www.Manualslib.com manuals search engine

Surges and/or Chuggles Symptom (Cont'd)

Step	Action	Value(s)	Yes	No
10	1. Check items that can cause the engine to run lean. Refer to *Diagnostic Aids* in *DTC P0171*. 2. If a problem is found, repair as necessary. Was a problem found?	—	Go to *Step 11*	Verify repair
11	1. Check for proper ignition voltage output with spark tester J 26792 (ST-125). Refer to *Electric Ignition System* for procedure. 2. If a problem is found, repair as necessary. Was a problem found?	—	Verify repair	Go to *Step 12*
12	1. Check for a loose ignition coil ground and ION Sensing module circuit. 2. If a problem is found, repair as necessary. Was a problem found?	—	Verify repair	Go to *Step 13*
13	1. Check the ignition coils for cracks or carbon tracking. 2. If a problem is found, repair as necessary. Was a problem found?	—	Verify repair	Go to *Step 15*
14	1. Remove the spark plugs and check for wet plugs, cracks, wear, improper gap, burned electrodes, or heavy deposits. Refer to *Electronic Ignition System*. NOTE: If spark plugs are gas or oil fouled, the cause of the fouling must be determined before replacing the spark plugs. 2. If a problem is found, repair as necessary. Was a problem found?	—	Verify repair	Go to *Step 15*
15	1. Check the injector connections. 2. If any of the injector connectors are connected to an incorrect cylinder, correct as necessary. Was a problem found?	—	Verify repair	Go to *Step 16*
16	1. Check PCM grounds for the cleanliness, tightness and proper locations. Refer to the PCM wiring diagrams in *Electrical Diagnosis*. 2. If a problem is found, repair as necessary. Was a problem found?	—	Verify repair	Go to *Step 17*
17	1. Check MAF sensor connections. 2. If a problem is found, replace the faulty terminals as necessary. Refer to *Electrical Diagnosis* for wiring repair procedures. Was a problem found?	—	Verify repair	Go to *Step 18*
18	1. Visually/physically check vacuum hoses for splits, kinks, and proper connections and routing as shown on the "Vehicle Emission Control Information" label. 2. If a problem is found, repair as necessary. Was a problem found?	—	Verify repair	Go to *Step 19*

Downloaded from www.Manualslib.com manuals search engine

Surges and/or Chuggles Symptom (Cont'd)

Step	Action	Value(s)	Yes	No
19	1. Check the exhaust system for possible restriction: ● Inspect the exhaust system for damaged or collapsed pipes. ● Inspect the muffler for heat distress or possible internal failure. ● Check for a possible plugged three-way catalytic converter by checking the exhaust system back pressure. Refer to *Restricted Exhaust System Check*. 2. If a problem is found, repair as necessary. Was a problem found?	—	Verify repair	Go to *Step 20*
20	1. Review all diagnostic procedures within this table. 2. If all procedures have been completed and no malfunctions have been found, review/inspect the following: ● Visual/physical inspection ● Tech 2 data ● Freeze Frame data/Failure Records buffer ● All electrical connections within a suspected circuit and/or system. 3. If a problem is found, repair as necessary. Was a problem found?	—	Verify repair	Contact Technical Assistance

Downloaded from www.Manualslib.com manuals search engine

Lack of Power, Sluggish or Spongy Symptom

Step	Action	Value(s)	Yes	No
1	**DEFINITION:** Engine delivers less than expected power. Little or no increase in speed when accelerator pedal is pushed down part-way. Was the "On-Board Diagnostic (OBD) System Check" performed?	—	Go to *Step 2*	Go to *OBD System Check*
2	Was the "Electric Throttle Control (ETC) System Check" performed?	—	Go to *Step 3*	Go to *ETC System Check*
3	1. Perform a bulletin search. 2. If a bulletin that addresses the symptom is found, correct the condition as instructed in the bulletin. Was a bulletin found that addresses the symptom?	—	Verify repair	Go to *Step 4*
4	Was a visual/physical check performed?	—	Go to *Step 5*	Go to *Visual/Physical Check*
5	1. Remove and check the air filter element for dirt or restrictions. Refer to *Air Intake System* in *ON-Vehicle Service*. 2. Replace the air filter element if necessary. Was a repair required?	—	Verify repair	Go to *Step 6*
6	1. Check for low fuel pressure. Refer to *Fuel System Pressure Test*. 2. If a problem is found, repair as necessary. Was a problem found?	—	Verify repair	Go to *Step 7*
7	1. Check for water- or alcohol-contaminated fuel. 2. If a problem is found, repair as necessary. Was a problem found?	—	Verify repair	Go to *Step 8*
8	1. Install the Tech 2. 2. Run the engine at idle. 3. On the Tech 2, select F3: Miscellaneous Test, F6: Variable Intake Manifold. 4. Repeat Switch ON or OFF of VIM solenoid valve by using the Tech 2. 5. Check to see if the actuator works normally. 6. If a problem is found, repair as necessary. Was a problem found?	—	Verify repair	Go to *Step 9*
9	1. Check for proper ignition voltage output with spark tester J 26792 (ST-125). Refer to *Electronic Ignition System* for procedure. 2. If a problem is found, repair as necessary. Was a problem found?	—	Verify repair	Go to *Step 10*

Downloaded from www.Manualslib.com manuals search engine

Lack of Power, Sluggish or Spongy Symptom (Cont'd)

Step	Action	Value(s)	Yes	No
10	1. Remove the spark plugs and check for wet plugs, cracks, wear, improper gap, burned electrodes, or heavy deposits. Refer to *Electronic Ignition System*. NOTE: If spark plugs are gas or oil fouled, the cause of the fouling must be determined before replacing the spark plugs. 2. If a problem is found, repair as necessary. Was a problem found?	—	Verify repair	Go to *Step 11*
11	1. Check the ignition coils for cracks or carbon tracking. 2. If a problem is found, repair as necessary. Was a problem found?	—	Verify repair	Go to *Step 12*
12	1. Check the PCM grounds for the cleanliness, tightness and proper locations. Refer to the PCM wiring diagrams in *Electrical Diagnosis*. 2. If a problem is found, repair as necessary. Was a problem found?	—	Verify repair	Go to *Step 13*
13	1. Check the exhaust system for possible restriction: • Inspect the exhaust system for damaged or collapsed pipes. • Inspect the muffler for heat distress or possible internal failure. • Check for a possible plugged three-way catalytic converter by checking the exhaust system back pressure. Refer to *Restricted Exhaust System Check*. 2. If a problem is found, repair as necessary. Was a problem found?	—	Verify repair	Go to *Step 14*
14	1. Check the torque converter clutch (TCC) for proper operation. Refer to *4L30-E Transmission Diagnosis*. 2. If a problem is found, repair as necessary. Was a problem found?	—	Verify repair	Go to *Step 15*
15	1. Check for an engine mechanical problem. Check for low compression, incorrect or worn camshaft, loose timing belt, etc. Refer to *Engine Mechanical*. 2. If a problem is found, repair as necessary. Was a problem found?	—	Verify repair	Go to *Step 16*
16	1. Review all diagnostic procedures within this table. 2. If all procedures have been completed and no malfunctions have been found, review/inspect the following: • Visual/physical inspection • Tech 2 data • Freeze Frame data/Failure Records buffer • All electrical connections within a suspected circuit and/or system. 3. If a problem is found, repair as necessary. Was a problem found?	—	Verify repair	Contact Technical Assistance

Downloaded from www.Manualslib.com manuals search engine

Detonation/Spark Knock Symptom

Step	Action	Value(s)	Yes	No
1	**DEFINITION:** A mild to severe ping, usually worse under acceleration. The engine makes sharp metallic knocks that change with throttle opening. Was the "On-Board Diagnostic (OBD) System Check" performed?	—	Go to *Step 2*	Go to *OBD System Check*
2	1. Perform a bulletin search. 2. If a bulletin that addresses the symptom is found, correct the condition as instructed in the bulletin. Was a bulletin found that addresses the symptom?	—	Verify repair	Go to *Step 3*
3	Was a visual/physical check performed?	—	Go to *Step 4*	Go to *Visual/Physical Check*
4	If Tech 2 readings are normal (refer to *Typical Scan Values*) and there are no engine mechanical faults, fill the fuel tank with a known quality gasoline that has a minimum octane rating of 87 and re-evaluate the vehicle performance. Is detonation present?	—	Go to *Step 5*	Verify repair
5	1. Check the transmission range switch circuit. Use a Tech 2 and be sure the Tech 2 indicates that the vehicle is in drive with the gear selector in drive or overdrive. 2. If a problem is found, diagnose and repair the transmission range switch as necessary (refer to *4L30-E Automatic Transmission Diagnosis*). Was a problem found?	—	Verify repair	Go to *Step 6*
6	1. Check TCC operation. Refer to *4L30-E Transmission Diagnosis*. 2. If a problem is found, repair as necessary. Was a problem found?	—	Verify repair	Go to *Step 7*
7	1. Check for obvious overheating problems: • Low engine coolant. • Restricted air flow to radiator, or restricted water flow through radiator. • Correct coolant solution should be a 50/50 mix of approved antifreeze/coolant and water. Refer to *Engine Cooling*. • EGR operation. Refer to *DTC P0401*. • ION sensing module fault. 2. If a problem is found, repair as necessary. Was a problem found?	—	Verify repair	Go to *Step 8*
8	1. Ignition "OFF." 2. Disconnect the ION sensing module. 3. Disconnect the PCM. Is the action complete?	—	Go to *Step 9*	—
9	Check the ION sensing harness between the PCM (F68) and ION sensing module circuit (RED Wire) at the Kl line harness connector. Was a problem found?	—	Verify repair	Go to *Step 10*

Downloaded from www.Manualslib.com manuals search engine

Detonation/Spark Knock Symptom (Cont'd)

Step	Action	Value(s)	Yes	No
10	1. Disconnect the ignition coil. Is the action complete?	—	Go to *Step 11*	—
11	Check the ION sensing harness between the ignition coil and ION sensing module circuit at the DC motor harness connector. Was a problem found?	—	Verify repair	Go to *Step 12*
12	Check the following items; 1. Ignition coil and ignition coil circuit. 2. Ignition coil ground circuit for a poor connection. 3. If a problem is found, repair wiring harness as necessary. Was a problem found?	—	Verify repair	Go to *Step 13*
13	Replace the Ignition coil. Is the action complete?	—	Verify repair	Go to *Step 14*
14	Check the following items; 1. ION sensing module ground circuit for a poor connection. 2. If a problem is found, repair wiring harness as necessary. Was a problem found?	—	Go to *Step 10*	Go to *Step 16*
15	Replace the ION sensing module. Is the action complete?	—	Verify repair	Go to *Step 16*
16	1. Check fuel pressure. Refer to Chart Fuel System Pressure Test. 2. If a problem is found, repair as necessary. Was a problem found?	—	Verify repair	Go to *Step 17*
17	1. Check items that can cause an engine to run lean (long term fuel trim significantly in the positive range). For a lean condition, refer to *Diagnostic Aids* in *DTC P0171 Diagnostic Support*. 2. If a problem is found, repair as necessary. Was a problem found?	—	Verify repair	Go to *Step 18*
18	1. Spark plugs for proper heat range. Refer to *General Information*. 2. If incorrect spark plugs are installed, replace spark plugs as necessary. Did any spark plugs require replacement?	—	Verify repair	Go to *Step 19*
19	1. Remove excessive carbon buildup with a top engine cleaner. Refer to instructions on the top engine cleaner can. 2. Re-evaluate vehicle performance. Is detonation still present?	—	Go to *Step 20*	Verify repair

Downloaded from www.Manualslib.com manuals search engine

Detonation/Spark Knock Symptom (Cont'd)

Step	Action	Value(s)	Yes	No
20	1. Check for an engine mechanical problem. Perform a cylinder compression check. Refer to *Engine Mechanical*. 2. If a problem is found, repair as necessary. Was a problem found?	—	Verify repair	Go to *Step 21*
21	1. Review all diagnostic procedures within this table. 2. If all procedures have been completed and no malfunctions have been found, review/inspect the following: ● Visual/physical inspection ● Tech 2 data ● Freeze Frame data/Failure Records buffer ● All electrical connections within a suspected circuit and/or system. 3. If a problem is found, repair as necessary. Was a problem found?	—	Verify repair	Contact Technical Assistance

Downloaded from www.Manualslib.com manuals search engine

Rough, Unstable, or Incorrect Idle, Stalling Symptom

Step	Action	Value(s)	Yes	No
1	**DEFINITION:** Engine runs unevenly at idle. If severe, the engine or vehicle may shake. Engine idle speed may vary in RPM. Either condition may be severe enough to stall the engine. Was the "On-Board Diagnostic (OBD) System Check" performed?	—	Go to *Step 2*	Go to *OBD System Check*
2	Was the "Electric Throttle Control (ETC) System Check" performed?	—	Go to *Step 3*	Go to *ETC System Check*
3	1. Perform a bulletin search. 2. If a bulletin that addresses the symptom is found, correct the condition as instructed in the bulletin. Was a bulletin found that addresses the symptom?	—	Go to *Step 14*	Go to *Step 4*
4	Was a visual/physical check performed?	—	Go to *Step 5*	Go to *Visual/Physical Check*
5	1. Check the PCM grounds for cleanliness, tightness and proper routing. Refer to the PCM wiring diagrams in *Electrical Diagnosis*. 2. If a problem is found, repair as necessary. Was a problem found?	—	Verify repair	Go to *Step 6*
6	Observe the long term fuel trim on the Tech 2. Is the long term fuel trim significantly in the negative range (rich condition)?	—	Go to *Step 7*	Go to *Step 8*
7	1. Check items that can cause the engine to run rich. Refer to *Diagnostic Aids* in *DTC P0172 Diagnostic Support*. 2. If a problem is found, repair as necessary. Was a problem found?	—	Verify repair	Go to *Step 10*
8	Is the long term fuel trim significantly in the positive range (lean condition)?	—	Go to *Step 9*	Go to *Step 10*
9	1. Check items that can cause the engine to run lean. Refer to *Diagnostic Aids* in *DTC P0171 Diagnostic Support*. 2. If a problem is found, repair as necessary. Was a problem found?	—	Verify repair	Go to *Step 10*
10	1. Check for incorrect idle speed. Ensure that the following conditions are present: • The engine is fully warm. • The accessories are "OFF." 2. Using a Tech 2, monitor the Engine Speed. Is the Engine Speed within the specified values?	Desired Idle Speed	Go to *Step 12*	Go to *Step 11*

Downloaded from www.Manualslib.com manuals search engine

Rough, Unstable, or Incorrect Idle, Stalling Symptom (Cont'd)

Step	Action	Value(s)	Yes	No
11	1. Visually/physically inspect for the following conditions: ● Restricted air intake system. Check for a possible collapsed air intake duct, restricted air filter element, or foreign objects blocking the air intake system. ● Large vacuum leak. Check for a condition that causes a large vacuum leak, such as an incorrectly installed or faulty crankcase ventilation valve or a disconnected brake booster hose. 2. If a problem is found, repair as necessary. Was a problem found?	—	Verify repair	Go to *Step 9*
12	Check the injector connections. If any of the injectors are connected to an incorrect cylinder, correct as necessary. Was a problem found?	—	Verify repair	Go to *Step 13*
13	1. Perform the "Injector Coil/Balance Test" in *Fuel Metering System*. 2. If a problem is found, repair as necessary. Was a problem found?	—	Verify repair	Go to *Step 14*
14	1. Check for fuel in the pressure regulator vacuum hose. 2. If fuel is present, replace the fuel pressure regulator assembly. Refer to *Fuel Metering System*. 3. If a problem is found, repair as necessary. Was a problem found?	—	Verify repair	Go to *Step 15*
15	1. Check for proper ignition voltage output with spark tester J 26792 (ST-125). Refer to *Electronic Ignition System* for the procedure. 2. If a problem is found, repair as necessary. Was a problem found?	—	Verify repair	Go to *Step 16*
16	1. Remove spark plugs. Check for wet plugs, cracks, wear, improper gap, burned electrodes, or heavy deposits. Refer to *Electronic Ignition System*. NOTE: If spark plugs are gas or oil fouled, the cause of the fouling must be determined before replacing the spark plugs. 2. If a problem is found, repair as necessary. Was a problem found?	—	Verify repair	Go to *Step 17*
17	1. Check for a loose ignition coil ground and ION Sensing Module circuit. 2. If a problem is found, repair as necessary. Was a problem found?	—	Verify repair	Go to *Step 18*
18	1. Check ignition coils for cracks or carbon tracking. 2. If a problem is found, repair as necessary. Was a problem found?	—	Verify repair	Go to *Step 19*

Downloaded from www.Manualslib.com manuals search engine

Rough, Unstable, or Incorrect Idle, Stalling Symptom (Cont'd)

Step	Action	Value(s)	Yes	No
19	Using a Tech 2, monitor the throttle position 1 and 2 angle with the engine idling. Is the TP angle at the specified value and steady?	8 ~ 10%	Go to *Step 20*	Refer to *DTC* for further diagnosis
20	1. Check the positive crankcase ventilation (PCV) valve for proper operation. Refer to *Crankcase Ventilation System*. 2. If a problem is found, repair as necessary. Was a problem found?	—	Verify repair	Go to *Step 21*
21	1. Check the transmission range switch circuit. Use a Tech 2 and be sure the Tech 2 indicates that the vehicle is in drive with the gear selector in drive or overdrive. 2. If a problem is found, diagnose and repair the transmission range switch as necessary (refer to *4L30-E Automatic Transmission Diagnosis*). Was a problem found?	—	Verify repair	Go to *Step 22*
22	1. Check for the following engine mechanical items. Refer to *Engine Mechanical* for diagnosis procedures: ● Low compression ● Sticking or leaking valves ● Worn camshaft lobe(s) ● Camshaft drive belt slipped or stripped ● Incorrect valve timing ● Worn rocker arms ● Broken valve springs 2. If a problem is found, repair as necessary. Was a problem found?	—	Verify repair	Go to *Step 23*
23	1. Check for faulty motor mounts. Refer to *Engine Mechanical* for inspection of mounts. 2. If a problem is found, repair as necessary. Was a problem found?	—	Verify repair	Go to *Step 24*
24	1. Review all diagnostic procedures within this table. 2. If all procedures have been completed and no malfunctions have been found, review/inspect the following: ● Visual/physical inspection ● Tech 2 data ● Freeze Frame data/Failure Records buffer ● All electrical connections within a suspected circuit and/or system. 3. If a problem is found, repair as necessary. Was a problem found?	—	Verify repair	Contact Technical Assistance

Downloaded from www.Manualslib.com manuals search engine

Poor Fuel Economy Symptom

Step	Action	Value(s)	Yes	No
1	**DEFINITION:** Fuel economy, as measured by an actual road test, is noticeably lower than expected. Also, economy is noticeably lower than it was on this vehicle at one time, as previously shown by an actual road test. (Non-standard tires will cause odometer readings to be incorrect, and that may cause fuel economy to appear poor when it is actually normal.) Was the "On-Board Diagnostic (OBD) System Check" performed?	—	Go to *Step 2*	Go to *OBD System Check*
2	1. Perform a bulletin search. 2. If a bulletin that addresses the symptom is found, correct the condition as instructed in the bulletin. Was a bulletin found that addresses the symptom?	—	Verify repair	Go to *Step 3*
3	Was a visual/physical check performed?	—	Go to *Step 4*	Go to *Visual/Physical Check*
4	Check owner's driving habits. ● Is the A/C "ON" full time (defroster mode "ON")? ● Are tires at the correct pressure? ● Are excessively heavy loads being carried? ● Is acceleration too much, too often? Was a problem found?	—	Go to *Step 5*	Go to *Step 6*
5	Review the items in Step 4 with the customer and advise as necessary. Is the action complete?	—	System OK	—
6	1. Visually/physically check: Vacuum hoses for splits, kinks, and improper connections and routing as shown on the "Vehicle Emission Control Information" label. 2. If a problem is found, repair as necessary. Was a problem found?	—	Verify repair	Go to *Step 7*
7	1. Remove and check the air filter element for dirt or for restrictions. Refer to *Air Intake System*. 2. Replace the air filter element if necessary. Was a repair required?	—	Verify repair	Go to *Step 8*
8	1. Remove spark plugs and check for wet plugs, cracks, wear, improper gap, burned electrodes, or heavy deposits. Refer to *Spark Plug Replacement*. NOTE: If spark plugs are gas or oil fouled, the cause of the fouling must be determined before replacing the spark plugs. 2. If a problem is found, repair as necessary. Was a problem found?	—	Verify repair	Go to *Step 9*
9	1. Check for low engine coolant level. Refer to *Engine Cooling*. 2. If a problem is found, repair as necessary. Was a problem found?	—	Verify repair	Go to *Step 10*

Downloaded from www.Manualslib.com manuals search engine

Poor Fuel Economy Symptom (Cont'd)

Step	Action	Value(s)	Yes	No
10	1. Check for an incorrect or faulty engine thermostat. Refer to *Engine Cooling*. 2. If a problem is found, repair as necessary. Was a problem found?	—	Verify repair	Go to *Step 11*
11	1. Check for low engine compression. Refer to *Engine Mechanical*. 2. If a problem is found, repair as necessary. Was a problem found?	—	Verify repair	Go to *Step 12*
12	1. Check the TCC operation. Refer to *4L30-E Transmission Diagnosis*. 2. If a problem is found, repair as necessary. Was a problem found?	—	Verify repair	Go to *Step 13*
13	1. Check the exhaust system for possible restriction: • Inspect the exhaust system for damaged or collapsed pipes. • Inspect the muffler for heat distress or possible internal failure. • Check for a possible plugged three-way catalytic converter by checking the exhaust system back pressure. Refer to *Restricted Exhaust System Check*. 2. If a problem is found, repair as necessary. Was a problem found?	—	Verify repair	Go to *Step 14*
14	Check for proper calibration of the speedometer. Does the speed indicated on the speedometer closely match the vehicle speed displayed on the Tech 2?	—	Go to *Step 16*	Go to *Step 15*
15	Diagnose and repair an inaccurate speedometer condition as necessary. Refer to *Vehicle Speed Sensor* in *Electrical Diagnosis*. Was a problem found?	—	Verify repair	—
16	1. Check the air intake system and the crankcase for air leaks. Refer to *Air Intake System* and *Crankcase Ventilation System*. 2. If a problem is found, repair as necessary. Was a problem found?	—	Verify repair	Go to *Step 17*
17	1. Review all diagnostic procedures within this table. 2. When all procedures have been completed and no malfunctions have been found, review/inspect the following: • Visual/physical inspection • Tech 2 data • Freeze Frame data/Failure Records buffer • All connections within a suspected circuit and/or system. 3. If a problem is found, repair as necessary. Was a problem found?	—	Verify repair	Go to *Step 18*
18	Perform the procedure in *Fuel System Pressure Test*. Was the fuel pressure normal?	—	Contact Technical Assistance	Verify repair

Downloaded from www.Manualslib.com manuals search engine

Excessive Exhaust Emissions or Odors Symptom

Step	Action	Value(s)	Yes	No
1	**DEFINITION:** Vehicle fails an emission test. Vehicle has excessive "rotten egg" smell. (Excessive odors do not necessarily indicate excessive emissions.) Was the "On-Board Diagnostic (OBD) System Check" performed?	—	Go to *Step 2*	Go to *OBD System Check*
2	1. Perform a bulletin search. 2. If a bulletin that addresses the symptom is found, correct the condition as instructed in the bulletin. Was a bulletin found that addresses the symptom?	—	Go to *Step 13*	Go to *Step 3*
3	Was a thorough visual/physical check performed?	—	Go to *Step 4*	Go to *Visual/Physical Check*
4	1. Check for vacuum leaks. Check vacuum lines, intake manifold, throttle body, etc. 2. If a problem is found, repair as necessary. Were any vacuum leaks located?	—	Go to *Step 13*	Go to *Step 5*
5	1. Check the fuel cap for proper installation. 2. Secure the fuel cap if necessary. Was the fuel cap installed properly?	—	Go to *Step 6*	Go to *Step 13*
6	1. Check the fuel pressure. Perform the procedure in *Fuel System Pressure Test*. 2. If a problem is found, repair as necessary. Was a problem found?	—	Go to *Step 13*	Go to *Step 7*
7	1. Check for a faulty, plugged, or incorrectly installed crankcase ventilation valve; also check the crankcase ventilation system for plugging. 2. If a problem is found, repair as necessary. Was a problem found?	—	Go to *Step 13*	Go to *Step 8*
8	1. Check the injector connections. 2. If any of the injectors are connected to an incorrect cylinder, correct as necessary. Was a problem found?	—	Go to *Step 13*	Go to *Step 9*
9	1. Perform the "Injector Coil/Balance Test" in *Fuel Metering System*. 2. If a problem is found, repair as necessary. Was a problem found?	—	Go to *Step 13*	Go to *Step 10*
10	1. Refer to *Engine Cooling* for cooling system diagnosis. 2. If a problem is found, repair as necessary. Was a problem found?	—	Go to *Step 13*	Go to *Step 11*
11	1. Check EVAP canister for fuel loading. Refer to *Evaporative Emission Control System*. 2. If a problem is found, repair as necessary. Was a problem found?	—	Go to *Step 13*	Go to *Step 12*

Downloaded from www.Manualslib.com manuals search engine

Excessive Exhaust Emissions or Odors Symptom (Cont'd)

Step	Action	Value(s)	Yes	No
12	1. Remove excessive carbon buildup with a top engine cleaner. Refer to the instructions on the top engine cleaner can. 2. Perform the exhaust emission test. Does the vehicle pass the test?	—	System OK	Go to *Step 14*
13	Perform the exhaust emission test. Does the vehicle pass the test?	—	System OK	Go to *Step 14*
14	Does the exhaust emission test indicate excessive CO and HC levels or is long term fuel trim significantly in the negative range (rich condition)?	—	Go to *Step 15*	Go to *Step 16*
15	1. Check items that can cause the engine to run rich. Refer to *Diagnostic Aids* in *DTC P0172 Diagnostic Support*. Make any necessary repairs. 2. Perform the exhaust emission test. Does the vehicle pass the test?	—	System OK	Go to *Step 17*
16	1. Check items that can cause the engine to run lean. Refer to *Diagnostic Aids* in *DTC P0171 Diagnostic Support*. Make any necessary repairs. 2. Perform the exhaust emission test. Does the vehicle pass the test?	—	System OK	Go to *Step 17*
17	1. Check the EGR system (refer to *DTC P0401*). 2. If a problem is found, repair as necessary. Was a problem found?	—	Go to *Step 13*	Go to *Step 18*
18	1. Check for an engine mechanical problem. Perform a cylinder compression check (refer to *Engine Mechanical*). 2. If a problem is found, repair as necessary. Was a problem found?	—	Go to *Step 13*	Go to *Step 19*
19	1. Review all diagnostic procedures within this table. 2. If all procedures have been completed and no malfunctions have been found, review/inspect the following: • Visual/physical inspection • Tech 2 data • Freeze Frame data/Failure Records butter • All electrical connections within a suspected circuit and/or system. 3. If a problem is found, repair as necessary. Was a problem found?	—	Verify repair	Contact Technical Assistance

Downloaded from www.Manualslib.com manuals search engine

Dieseling, Run-On Symptom

Step	Action	Value(s)	Yes	No
1	**DEFINITION:** Engine continues to run after key is turned “OFF,” but runs very rough. If engine runs smooth, check ignition switch and adjustment. Was the “On-Board Diagnostic (OBD) System Check” performed?	—	Go to *Step 2*	Go to *OBD System Check*
2	1. Perform a bulletin search. 2. If a bulletin that addresses the symptom is found, correct the condition as instructed in the bulletin. Was a bulletin found that addresses the symptom?	—	Verify repair	Go to *Step 3*
3	Was a visual/physical check performed?	—	Go to *Step 4*	Go to *Visual/Physical Check*
4	1. Check for a short between B+ and any of the ignition feed circuits. 2. If a problem is found, repair as necessary. Was a problem found?	—	Verify repair	Go to *Step 5*
5	1. Review all diagnostic procedures within this table. 2. If all procedures have been completed and no malfunctions have been found, review/inspect the following: • Visual/physical inspection • Tech 2 data • Freeze Frame data/Failure Records butter • All electrical connections within a suspected circuit and/or system 3. If a problem is found, repair as necessary. Was a problem found?	—	Verify repair	Contact Technical Assistance

Downloaded from www.Manualslib.com manuals search engine

Backfire Symptom

Step	Action	Value(s)	Yes	No
1	**DEFINITION:** Fuel ignites in the intake manifold, or in the exhaust system, making a loud popping noise. Was the "On-Board Diagnostic (OBD) System Check" performed?	—	Go to *Step 2*	Go to *OBD System Check*
2	1. Perform a bulletin search. 2. If a bulletin that addresses the symptom is found, correct the condition as instructed in the bulletin. Was a bulletin found that addresses the symptom?	—	Verify repair	Go to *Step 3*
3	Was a visual/physical check performed?	—	Go to *Step 4*	Go to *Visual/Physical Check*
4	1. Check for proper ignition voltage coil output with spark tester J 26792 (ST-125). Refer to *Electric Ignition System* for procedure. 2. If a problem is found, repair as necessary. Was a problem found?	—	Verify repair	Go to *Step 5*
5	1. Remove spark plugs and check for wet plugs, cracks, wear, improper gap, burned electrodes, or heavy deposits. Refer to *Electronic Ignition System*. NOTE: If spark plugs are gas or oil fouled, the cause of the fouling must be determined before replacing the spark plugs. Refer to *DTC P0172* to determine the cause of a rich condition or *Engine Mechanical* for an oil fouling condition. 2. If a problem is found, repair as necessary. Was a problem found?	—	Verify repair	Go to *Step 6*
6	1. Visually/physically inspect the ignition coils for cracks. 2. If a problem is found, repair as necessary. Was a problem found?	—	Verify repair	Go to *Step 7*
7	1. Check for an intermittent ignition system malfunction: • Intermittent CKP 58X signal. • Intermittent ignition feed circuit or sensor ground circuit to the crankshaft position sensor. 2. If a problem is found, repair as necessary. Was a problem found?	—	Verify repair	Go to *Step 8*
8	1. Check the fuel pressure. Refer to *Fuel System Pressure Test*. 2. If a problem is found, repair as necessary. Was a problem found?	—	Verify repair	Go to *Step 9*

Downloaded from www.Manualslib.com manuals search engine

Backfire Symptom (Cont'd)

Step	Action	Value(s)	Yes	No
9	1. Check for the following engine mechanical conditions. Refer to *Engine Mechanical* for diagnosis procedures: ● Low compression ● Sticking or leaking valves ● Worn camshaft lobe(s) ● Camshaft drive belt slipped or stripped ● Incorrect valve timing 2. If a problem is found, repair as necessary. Was a problem found?	—	Verify repair	Go to *Step 10*
10	1. Check the intake and exhaust manifold(s) for casting flash. Refer to *Engine Mechanical*. 2. If a problem is found, repair as necessary. Was a problem found?	—	Verify repair	Go to *Step 11*
11	1. Review all diagnostic procedures within this table. 2. If all procedures have been completed and no malfunctions have been found, review/inspect the following: ● Visual/physical inspection ● Tech 2 data ● Freeze Frame data/Failure Records butter ● All electrical connections within a suspected circuit and/or system. 3. If a problem is found, repair as necessary. Was a problem found?	—	Verify repair	Contact Technical Assistance

Downloaded from www.Manualslib.com manuals search engine

Cuts Out, Misses Symptom

Step	Action	Value(s)	Yes	No
1	**DEFINITION:** Steady pulsation or jerking that follows engine speed; usually more pronounced as engine load increases. Was the "On-Board Diagnostic (OBD) System Check" performed?	—	Go to *Step 2*	Go to *OBD System Check*
2	1. Perform a bulletin search. 2. If a bulletin that addresses the symptom is found, correct the condition as instructed in the bulletin. Was a bulletin found that addresses the symptom?	—	Go to *Step 14*	Go to *Step 3*
3	Was a visual/physical check performed?	—	Go to *Step 4*	Go to *Visual/Physical Check*
4	Was the "Electric Throttle Control (ETC) System Check" performed?	—	Go to *Step 5*	Go to *ETC System Check*
5	1. Check the PCM grounds for clearness, tightness and proper routing. Refer to the PCM wiring diagrams in *Electrical Diagnosis*. 2. If a problem is found, repair as necessary. Was a problem found?	—	Verify repair	Go to *Step 6*
6	Observe the long term fuel trim on the Tech 2. Is the long term fuel trim significantly in the negative range (rich condition)?	—	Go to *Step 7*	Go to *Step 8*
7	1. Check items that can cause the engine to run rich. Refer to *Diagnostic Aids* in *DTC P0172 Diagnostic Support*. 2. If a problem is found, repair as necessary. Was a problem found?	—	Verify repair	Go to *Step 10*
8	Is the long term fuel trim significantly in the positive range (lean condition)?	—	Go to *Step 9*	Go to *Step 10*
9	1. Check items that can cause the engine to run lean. Refer to *Diagnostic Aids* in *DTC P0171 Diagnostic Support*. 2. If a problem is found, repair as necessary. Was a problem found?	—	Verify repair	Go to *Step 10*
10	1. Check for incorrect idle speed. Ensure that the following conditions are present: • The engine is fully warm. • The accessories are "off." 2. Using a Tech 2, monitor the Engine Speed. Is the Engine Speed within the specified values?	Desired Idle Speed	Go to *Step 12*	Go to *Step 11*

Downloaded from www.Manualslib.com manuals search engine

Cuts Out, Misses Symptom (Cont'd)

Step	Action	Value(s)	Yes	No
11	1. Visually/physically inspect for the following conditions: ● Restricted air intake system. Check for a possible collapsed air intake duct, restricted air filter element, or foreign objects blocking the air intake system. ● Large vacuum leak. Check for a condition that causes a large vacuum leak, such as an incorrectly installed or faulty PCV valve or brake booster hose disconnected . 2. If a problem is found, repair as necessary. Was a problem found?	—	Verify repair	Go to *Step 9*
12	Check the injector connections. If any of the injectors are connected to an incorrect cylinder, correct as necessary. Was a problem found?	—	Verify repair	Go to *Step 13*
13	1. Perform the "Injector Coil/Balance Test" in *Fuel Metering System*. 2. If a problem is found, repair as necessary. Was a problem found?	—	Verify repair	Go to *Step 14*
14	1. Check for fuel in the pressure regulator vacuum hose. 2. If fuel is present, replace the fuel pressure regulator assembly. Refer to *Fuel Metering System*. 3. If a problem is found, repair as necessary. Was a problem found?	—	Verify repair	Go to *Step 15*
15	1. Check for proper ignition voltage output with spark tester J 26792 (ST-125). Refer to *Electronic Ignition System* for the procedure. 2. If a problem is found, repair as necessary. Was a problem found?	—	Verify repair	Go to *Step 16*
16	1. Remove spark plugs. Check for wet plugs, cracks, wear, improper gap, burned electrodes, or heavy deposits. Refer to *Electronic Ignition System*. NOTE: If spark plugs are gas or oil fouled, the cause of the fouling must be determined before replacing the spark plugs. 2. If a problem is found, repair as necessary. Was a problem found?	—	Verify repair	Go to *Step 17*
17	1. Check for a loose ignition coil ground and ION Sensing module circuit. 2. If a problem is found, repair as necessary. Was a problem found?	—	Verify repair	Go to *Step 18*
18	1. Check ignition coils for cracks or carbon tracking. 2. If a problem is found, repair as necessary. Was a problem found?	—	Verify repair	Go to *Step 19*
19	Using a Tech 2, monitor the TP 1, 2 angle with the engine idling. Is the TP angle at the specified value and steady?	8 ~ 10%	Go to *Step 20*	Refer to *DTC P0123* for further diagnosis

Downloaded from www.Manualslib.com manuals search engine

Cuts Out, Misses Symptom (Cont'd)

Step	Action	Value(s)	Yes	No
20	1. Check the PCV valve for proper operation. Refer to *Crankcase Ventilation System*. 2. If a problem is found, repair as necessary. Was a problem found?	—	Verify repair	Go to *Step 21*
21	1. Check the transmission range switch circuit. Use a Tech 2 and be sure the Tech 2 indicates that the vehicle is in drive with the gear selector in drive or overdrive. 2. If a problem is found, diagnose and repair the transmission range switch as necessary (refer to *4L30-E Automatic Transmission Diagnosis*). Was a problem found?	—	Verify repair	Go to *Step 22*
22	1. Check the following engine mechanical items. Refer to *Engine Mechanical* for diagnosis procedures: ● Low compression ● Sticking or leaking valves ● Worn camshaft lobe(s) ● Camshaft drive belt slipped or stripped ● Incorrect valve timing ● Worn rocker arms ● Broken valve springs 2. If a problem is found, repair as necessary. Was a problem found?	—	Verify repair	Go to *Step 23*
23	1. Check for faulty motor mounts. Refer to *Engine Mechanical* for inspection of mounts. 2. If a problem is found, repair as necessary. Was a problem found?	—	Verify repair	Go to *Step 24*
24	1. Review all diagnostic procedures within this table. 2. If all procedures have been completed and no malfunctions have been found, review/inspect the following: ● Visual/physical inspection ● Tech 2 data ● Freeze Frame data/Failure Records butter ● All electrical connections within a suspected circuit and/or system 3. If a problem is found, repair as necessary. Was a problem found?	—	Verify repair	Contact Technical Assistance

Downloaded from www.Manualslib.com manuals search engine

Hesitation, Sag, Stumble Symptom

Step	Action	Value(s)	Yes	No
1	**DEFINITION:** Momentary lack of response as the accelerator is pushed down. Can occur at any vehicle speed. Usually most pronounced when first trying to make the vehicle move, as from a stop sign. May cause the engine to stall if severe enough. Was the "On-Board Diagnostic (OBD) System Check" performed?	—	Go to *Step 2*	Go to *OBD System Check*
2	Was the "Electric Throttle Control (ETC) System Check" performed?	—	Go to *Step 3*	Go to *ETC System Check*
3	1. Perform a bulletin search. 2. If a bulletin that addresses the symptom is found, correct the condition as instructed in the bulletin. Was a bulletin found that addresses the symptom?	—	Verify repair	Go to *Step 4*
4	Was a visual/physical check performed?	—	Go to *Step 5*	Go to *Visual/Physical Check*
5	1. Check the fuel control heated oxygen sensors (HO2S, B1S1 and B2S1). The fuel control heated oxygen sensors (HO2S) should respond quickly to different throttle positions. If they don't, check them for silicon or other contaminants from fuel or use of improper RTV sealant. The sensors may have a white powdery coating. Silicon contamination causes a high but false HO2S signal voltage (rich exhaust indication). The PCM will then reduce the amount of fuel delivered to the engine, causing a severe driveability problem. For more information, refer to *Powertrain Control Module (PCM) and Sensors*. 2. If a problem is found, repair as necessary. Was a problem found?	—	Verify repair	Go to *Step 6*
6	1. Check the fuel pressure. Refer to *Fuel System Pressure Test.* 2. If a problem is found, repair as necessary. Was a problem found?	—	Verify repair	Go to *Step 7*
7	Observe the TP 1, 2 angle display on the Tech 2 while slowly increasing throttle pedal. Does the TP angle display steadily increase from 8 ~ 10% at closed throttle to 90 ~ 92% at WOT?	—	Go to *Step 8*	Go to *Step 19*
8	Monitor the long term fuel trim on the Tech 2. Is the long term fuel trim significantly in the negative range (rich condition)?	—	Go to *Step 9*	Go to *Step 10*
9	1. Check items that can cause the engine to run rich. Refer to *Diagnostic Aids* in *DTC P0172 Diagnostic Support*. 2. If a problem is found, repair as necessary. Was a problem found?	—	Verify repair	Go to *Step 11*

Downloaded from www.Manualslib.com manuals search engine

Hesitation, Sag, Stumble Symptom (Cont'd)

Step	Action	Value(s)	Yes	No
10	1. Check items that can cause the engine to run lean. Refer to *Diagnostic Aids* in *DTC P0171 Diagnostic Support*. 2. If a problem is found, repair as necessary. Was a problem found?	—	Verify repair	Go to *Step 11*
11	1. Check for proper ignition voltage output with spark tester J 26792 (ST-125). Refer to *Electronic Ignition System* for the procedure. 2. If a problem is found, repair as necessary. Was a problem found?	—	Verify repair	Go to *Step 12*
12	1. Check for a loose ignition coil ground and ION Sensing module circuit. 2. If a problem is found, repair as necessary. Was a problem found?	—	Verify repair	Go to *Step 13*
13	1. Check the ignition coils for cracks or carbon tracking. 2. If a problem is found, repair as necessary. Was a problem found?	—	Verify repair	Go to *Step 14*
14	1. Remove spark plugs and check for wet plugs, cracks, wear, improper gap, burned electrodes, or heavy deposits. Refer to *Electronic Ignition System*. NOTE: If spark plugs are gas or oil fouled, the cause of the fouling must be determined before replacing the spark plugs. 2. If a problem is found, repair as necessary. Was a problem found?	—	Verify repair	Go to *Step 15*
15	1. Check the PCM grounds for clearness, tightness and proper routing. Refer to the PCM wiring diagrams in Electrical Diagnosis. 2. If a problem is found, repair as necessary. Was a problem found?	—	Verify repair	Go to *Step 16*
16	1. Check the MAF sensor connections. 2. If a problem is found, replace the faulty terminals as necessary. Refer to *Electrical Diagnosis* for wiring repair procedures. Was a problem found?	—	Verify repair	Go to *Step 17*

Downloaded from www.Manualslib.com manuals search engine

Hesitation, Sag, Stumble Symptom (Cont'd)

Step	Action	Value(s)	Yes	No
17	1. Visually/physically check vacuum hoses for splits, kinks, and proper connections and routing as shown on the "Vehicle Emission Control Information" label. 2. If a problem is found, repair as necessary. Was a problem found?	—	Verify repair	Go to *Step 18*
18	1. Review all diagnostic procedures within this table. 2. If all procedures have been completed and no malfunctions have been found, review/inspect the following: • Visual/physical inspection • Tech 2 data • Freeze Frame data/Failure Records butter • All electrical connections within a suspected circuit and/or system 3. If a problem is found, repair as necessary. Was a problem found?	—	Verify repair	Contact Technical Assistance

Downloaded from www.Manualslib.com manuals search engine

Bank 1 Restricted Exhaust System Check

Step	Action	Value(s)	Yes	No
1	Was the “On-Board Diagnostic (OBD) System Check” performed?	—	Go to *Step 2*	Go to *OBD System Check*
2	1. Remove the Bank 1 HO2S 2. 2. Install the Exhaust Backpressure Tester (BT-8515-V or equivalent) in place of the Bank 1 HO2S 2. 3. Run the engine at normal operating temperature. 4. Increase the engine speed to 2000 RPM and allow 10 seconds for pressure to build. 5. Observe the exhaust system backpressure reading on the gauge. Does the reading exceed the amount in the value column?	8.62 kPa (1.25 psi)	Go to *Step 3*	Go to *Step 4*
3	Repair the restriction in the exhaust system after the catalytic converter. Possible faults include: ● Collapsed pipe ● Heat distress ● Internal muffler failure Is the action complete?	—	Verify repair	—
4	1. Install the Bank 1 HO2S 2. 2. Install the Exhaust Backpressure Tester in place of Bank 1 HO2S 1. 3. Run the engine at normal operating temperature. 4. Increase the engine speed to 2000 RPM and allow 10 seconds for pressure to build. 5. Observe the exhaust system backpressure reading on the gauge. Does the reading exceed the amount in the value column?	8.62 kPa (1.25 psi)	Go to *Step 5*	No trouble found. If a driveability symptom exists, refer to symptom charts
5	Repair the restriction in the catalytic converter. Is the action complete?	—	Verify repair	—

NOTE: DTCs will be set by running the vehicle to normal operating temperature after a cold start with the O2 sensor disconnected. After performing these tests, use the Tech 2 to erase the DTCs that were set by the lack of O2 sensor activity.

Downloaded from www.Manualslib.com manuals search engine

Bank 2 Restricted Exhaust System Check

Step	Action	Value(s)	Yes	No
1	Was the “On-Board Diagnostic (OBD) System Check” performed?	—	Go to *Step 2*	Go to *OBD System Check*
2	1. Remove the Bank 2 HO2S 2. 2. Install the Exhaust Backpressure Tester (BT-8515-V or equivalent) in place of the Bank 2 HO2S 2. 3. Run the engine at normal operating temperature. 4. Increase the engine speed to 2000 RPM and allow 10 seconds for pressure to build. 5. Observe the exhaust system backpressure reading on the gauge. Does the reading exceed the amount in the value column?	8.62 kPa (1.25 psi)	Go to *Step 3*	Go to *Step 4*
3	Repair the restriction in the exhaust system after the catalytic converter. Possible faults include: ● Collapsed pipe ● Heat distress ● Internal muffler failure Is the action complete?	—	Verify repair	—
4	1. Install the Bank 2 HO2S 2. 2. Install the Exhaust Back pressure Tester in place of Bank 1 HO2S 1. 3. Run the engine at normal operating temperature. 4. Increase the engine speed to 2000 RPM and allow 10 seconds for pressure to build. 5. Observe the exhaust system backpressure reading on the gauge. Does the reading exceed the amount in the value column?	8.62 kPa (1.25 psi)	Go to *Step 5*	No trouble found. If a driveability symptom exists, refer to symptom charts
5	Repair the restriction in the catalytic converter. Is the action complete?	—	Verify repair	—

NOTE: DTCs will be set by running the vehicle to normal operating temperature after a cold start with the O2 sensor disconnected. After performing these tests, use the Tech 2 to erase the DTCs that were set by the lack of O2 sensor activity.

Downloaded from www.Manualslib.com manuals search engine

Default Matrix Table

Service Procedure Default Strategy

A referral strategy has been established to assist the technician with additional information when the cause of the failure cannot be determined. If no problem is found after performing diagnostics, then refer to the default matrix table for further diagnostic information.

Default Matrix Table

Strategy Based Diagnostic Charts	Initial Diagnosis	Default Section(s)
On-Board Diagnostic (OBD) System Check	Vehicle does not enter diagnostics.	Chassis Electrical
On-Board Diagnostic (OBD) System Check	Vehicle enters diagnostics and communicates with the Tech 2. MIL is “ON” in diagnostics. Engine does not start and run.	Ignition System Check
On-Board Diagnostic (OBD) System Check	Engine starts and runs, no PCM codes set. Customer complains of vibration.	—
On-Board Diagnostic (OBD) System Check	Engine starts and runs, no PCM codes set. Customer complains of harsh or soft shift, poor performance, delayed or no engagement into drive or reverse, transmission fluid leak, transmission noise or vibration, or improper TCC operation.	Automatic Transmission
PCM Power and Ground Check	On-Board Diagnostic (OBD) System Check.	Chassis Electrical
PCM Power and Ground Check	On-Board Diagnostic (OBD) System Check. PCM power and ground circuits OK. Data link voltage incorrect.	Chassis Electrical
On-Board Diagnostic (OBD) System Check	Engine starts and runs, no PCM codes set. Customer complains of harsh or soft shift, poor performance, delayed or no engagement into drive or reverse, transmission fluid leak, transmission noise or vibration, or improper TCC operation.	Automatic Transmission

Symptoms	Initial Diagnosis	Default Section(s)
Intermittents	1. On-board Diagnostic (OBD) system check. 2. Careful visual/physical inspections.	Chassis Electrical
Hard Starts	1. OBD system check. 2. ETC system check. 3. Sensors (ECT, MAP, MAF, TP) ; MAP output chart. 4. Fuel system electrical test, fuel system diagnosis. 5. Ignition system.	Engine Mechanical, Ignition System Check, Exhaust System Diagnosis

Downloaded from www.Manualslib.com manuals search engine

Symptoms	Initial Diagnosis	Default Section(s)
Surges and/or Chuggles	1. OBD system check. 2. ETC system check. 3. Heated oxygen sensors. 4. Fuel system diagnosis. 5. Ignition system.	Calibration ID/Service Bulletins, Ignition System Check, Generator Output, Exhaust System Diagnosis, 4L30-E System Test
Lack of Power, Sluggish or Spongy	1. OBD system check. 2. ETC system check. 3. Fuel system diagnosis. 4. Ignition system. 5. EGR operation. 6. EGR system check.	Refer to *Exhaust System* in *Engine Exhaust*, TCC Operation, Calibration ID/Service Bulletins
Detonation/Spark Knock	1. OBD system check. 2. Transmission range switch. 3. EGR operation. 4. EGR system check. 5. TCC operation. 6. Fuel system diagnosis. 7. Ignition system. 8. ION sensing module check.	TCC operation, Cooling System, Ignition System Check, Calibration ID/Service Bulletins
Rough, Unstable, or Incorrect Idle, Stalling	1. OBD system check. 2. ETC system check. 3. Fuel injector and fuel injector balance test. 4. EVAP emission canister purge valve check. 5. Ignition system. 6. EGR operation.	MAP Output Check, Throttle Linkage, EGR System Check, A/C Clutch Control Circuit Diagnosis, Crankcase Ventilation System, Calibration ID/Service Bulletins, Generator Output Voltage (refer to *Chassis Electrical*), Exhaust Diagnosis
Poor Fuel Economy	1. OBD system check. 2. Careful visual/physical inspection. 3. Ignition system. 4. Cooling system.	TCC Operation, Exhaust System (refer to *Engine Exhaust*)
Hesitation, Sag, Stumble	1. OBD system check. 2. ETC system check. 3. TP. 4. MAP output check. 5. Fuel system diagnosis. 6. Fuel injector and fuel injector balance test. 7. EVAP emission canister purge valve. 8. Ignition system.	EGR Operation, EGR System Check, Generator Output Voltage (refer to *Chassis Electrical*), Calibration ID/Service Bulletins, Ignition System Check
Cuts Out, Misses	1. OBD system check. 2. Cylinder balance test. 3. ETC system check.	Ignition System Check
Engine Cranks But Will Not Run	1. OBD system check.	Fuel System Electrical Diagnosis, Fuel System Diagnosis, Fuel Injector and Fuel Injector Balance Test.

Downloaded from www.Manualslib.com manuals search engine

Symptoms	Initial Diagnosis	Default Section(s)
Excessive Exhaust Emissions or Odors	1. OBD system check. 2. Emission test. 3. Cooling system. 4. Fuel system diagnosis. 5. Fuel injector and fuel injector balance test. 6. EVAP emission canister purge valve. 7. Crankcase ventilation system. 8. Ignition system. 9. MAP output check.	EGR System Check, Exhaust Diagnosis, Calibration ID/Service Bulletins
Dieseling, Run-On	1. OBD system check. 2. Careful visual/physical inspection. 3. Fuel system diagnosis.	—
Backfire	1. OBD system check. 2. Ignition system. 3. Fuel system diagnosis. 4. Fuel injector and fuel injector balance test. 5. EGR operation, EGR system check.	Exhaust System Diagnosis, Intake Casting Flash, Ignition System Check
Misfire	1. OBD system check. 2. Ignition system. 3. Fuel system diagnosis. 4. Fuel injector and fuel injector balance test.	Vibrations, Transmission, Driveshaft and Axle
Catalyst Monitor	1. OBD system check. 2. Careful visual/physical inspection. 3. Heated oxygen sensors.	Exhaust System
Fuel Trim	1. OBD system check. 2. Careful visual/physical inspection. 3. Fuel system diagnosis. 4. Heated oxygen sensors, MAF sensors.	Exhaust System Intake Air System
Evaporative Emissions	1. OBD system check. 2. Careful visual/physical inspection. 3. Fuel system diagnosis.	—
Heated Oxygen Sensors	1. OBD system check. 2. Careful visual/physical inspection.	Exhaust System

Downloaded from www.Manualslib.com manuals search engine

On-Vehicle ServiceCamshaft Position (CMP) Sensor

Removal Procedure

1. Disconnect the negative battery cable.
2. Remove the engine cover.
3. Remove the common chamber assembly.
   Refer to Common Chamber in Engine Mechanical section.

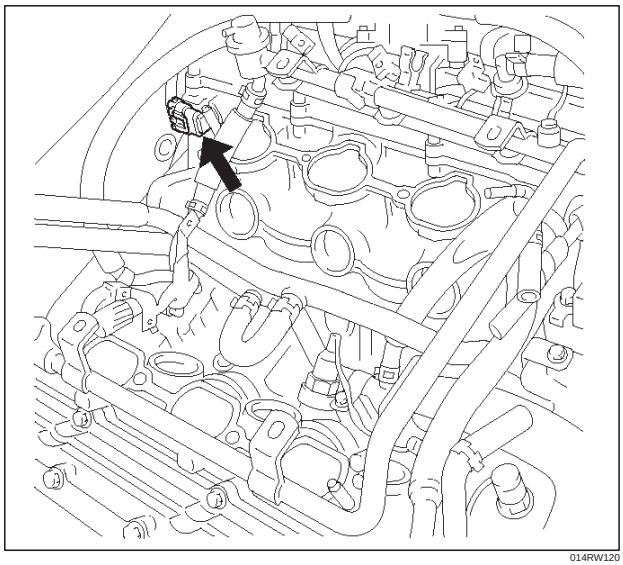

014RW120

4. Disconnect the electrical connector to the CMP sensor.

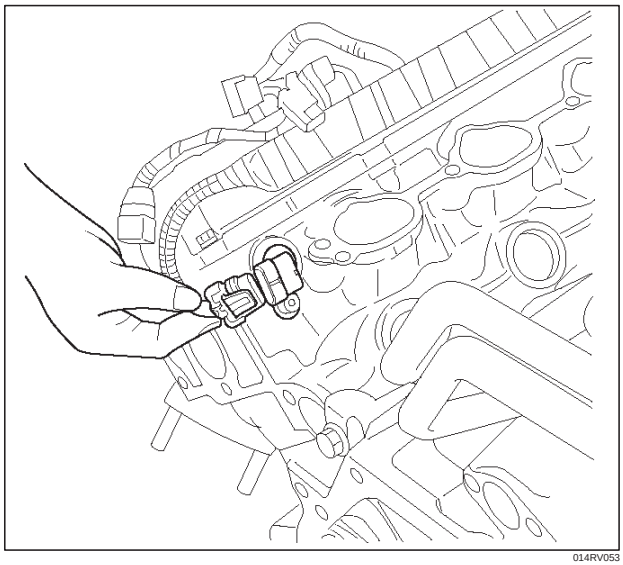

014RV053

5. Remove the CMP retaining bolt from the side of left cylinder head.
6. Remove the CMP sensor from the cylinder head.

Inspection Procedure

1. Inspect the sensor O-ring for cracks or leaks.
2. Replace the O-ring if it is worn or damaged.
3. Lubricate the new O-ring with engine oil.
4. Install the lubricated O-ring.

Installation Procedure

1. Install the CMP sensor in the cylinder head.
2. Install the CMP sensor retaining bolt.

   Tighten

   - **Tighten the retaining screw to 9 N·m (78 lb in.).**
3. Connect the electrical connector to the CMP sensor.

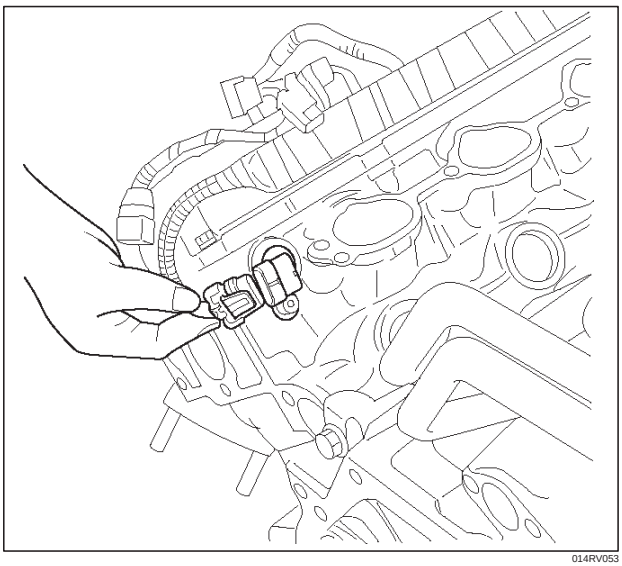

014RV053

4. Install the common chamber assembly.
   Refer to Common Chamber in Engine Mechanical section.

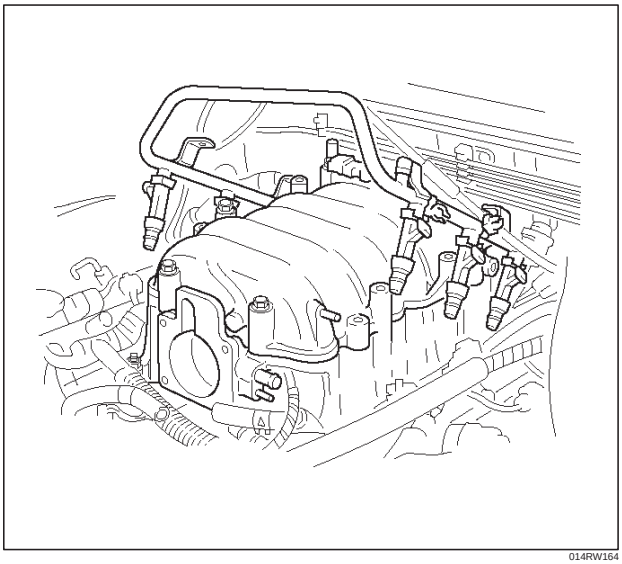

014RW164

5. Install the engine cover.
6. Connect the negative battery cable.

Downloaded from www.Manualslib.com manuals search engine

Crankshaft Position (CKP) Sensor

Removal Procedure

1. Disconnect the negative battery cable.
2. Disconnect the electrical connector to the CKP sensor.
3. Remove one bolt and the CKP sensor from the right side of the engine block, just behind the mount.

NOTE: Use caution to avoid any hot oil that might drip out.

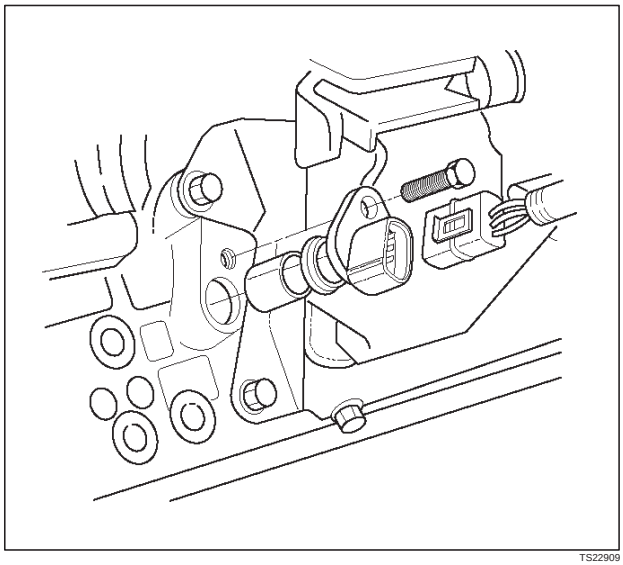

TS22909

Inspection Procedure

1. Inspect the sensor O-ring for cracks or leaks.
2. Replace the O-ring if it is worn or damaged.
3. Lubricate the new O-ring with engine oil.
4. Install the lubricated O-ring.

Installation Procedure

1. Install the CKP sensor in the engine block.
2. Install the CKP sensor mounting bolt.

Tighten

- **Tighten the mounting bolt to 9 N·m (78 lb in.).**

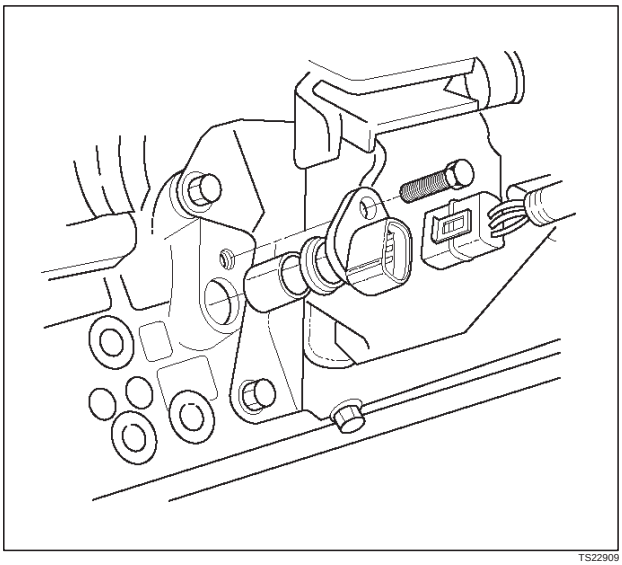

TS22909

3. Connect the electrical connector to the CKP sensor.
4. Connect the negative battery cable.

Engine Coolant Temperature (ECT) Sensor

Removal Procedure

NOTE: Care must be taken when handling the engine coolant temperature (ECT) sensor. Damage to the ECT sensor will affect proper operation of the fuel injection system.

1. Disconnect the negative battery cable.
2. Drain the radiator coolant. Refer to *Draining and Refilling Cooling System* in *Engine Cooling* section.
3. Disconnect the electrical connector.

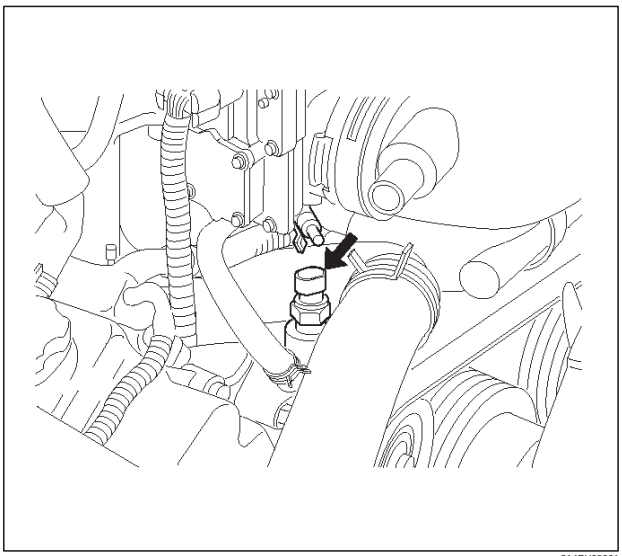

014RY00001

Downloaded from www.Manualslib.com manuals search engine

4. Remove the ECT sensor from the coolant crossover.

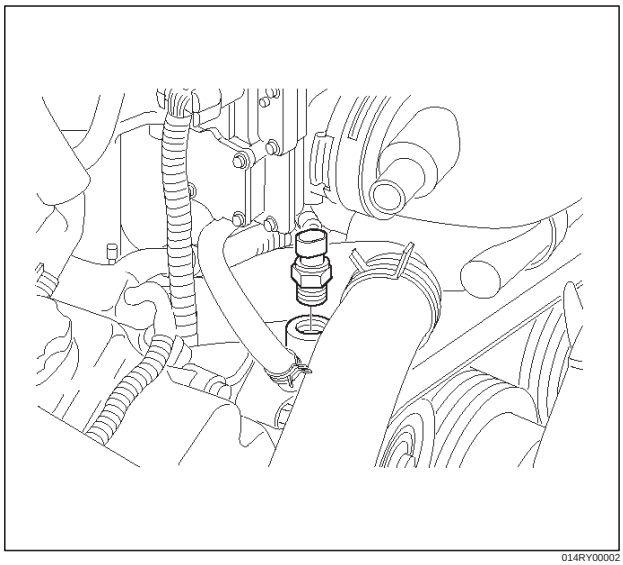

014RY00002

Installation Procedure

1. Apply sealer or the equivalent to the threads of the ECT sensor.
2. Install the ECT sensor in the coolant crossover.

Tighten

- **Tighten the ECT sensor to 30 N·m (22 lb ft.).**

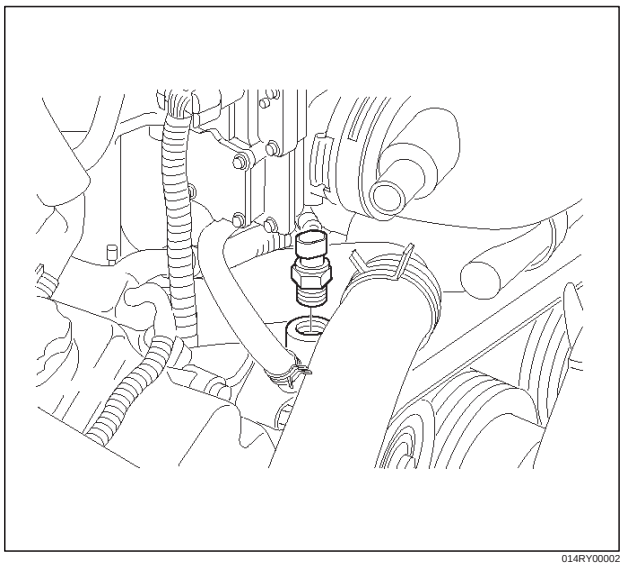

014RY00002

3. Connect the electrical connector.

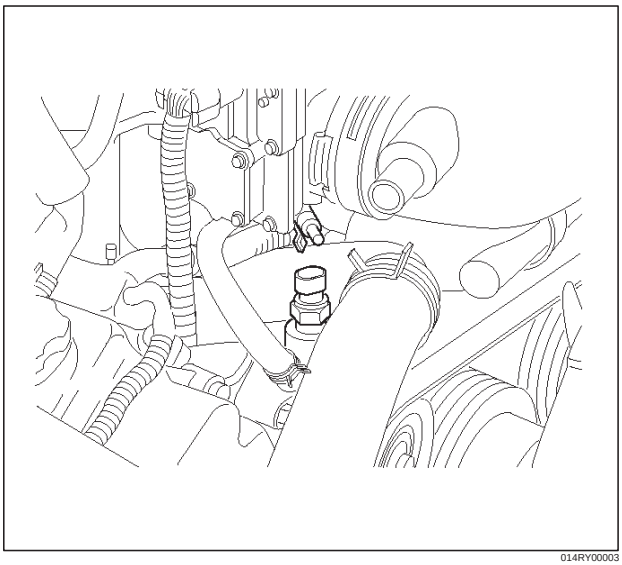

014RY00003

4. Fill the radiator with coolant. Refer to *Draining and Refilling Cooling System* in *Engine Cooling* section.
5. Connect the negative battery cable.

Heated Oxygen Sensor (HO2S)

Removal Procedure

1. Disconnect the negative battery cable.
2. Locate the four oxygen sensors.

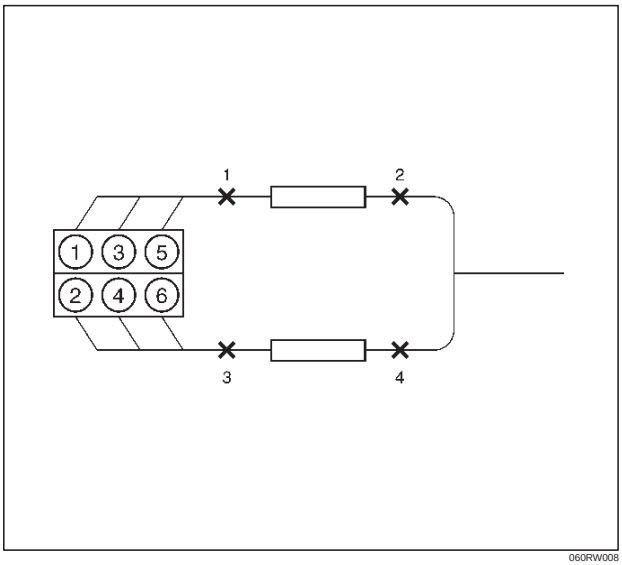

060RW008

Downloaded from www.Manualslib.com manuals search engine

- Bank 1 sensor 1 is mounted on the exhaust pipe ahead of the right-hand catalytic converter.

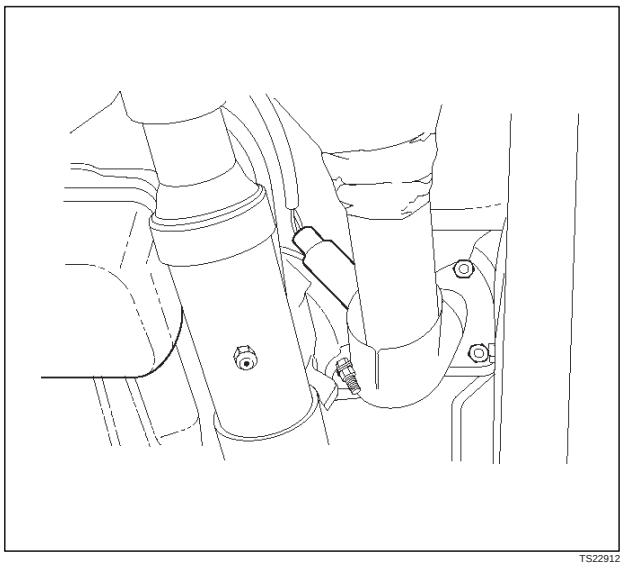

TS22912

- Bank 1 sensor 2 is mounted behind the right-hand catalytic converter.

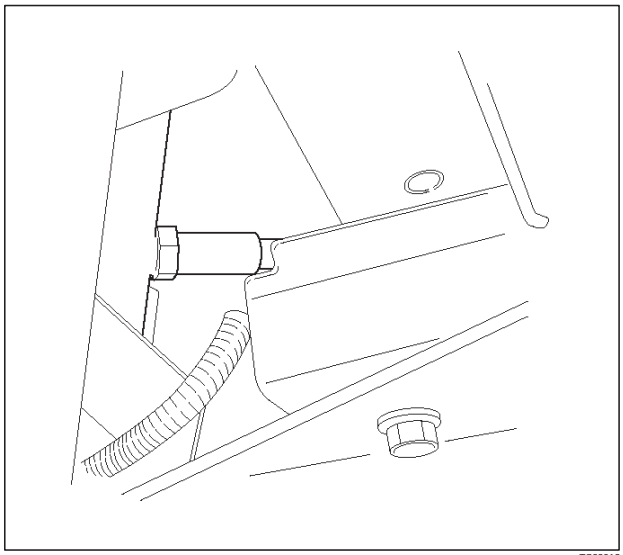

TS22913

- Bank 2 sensor 1 is mounted on the exhaust pipe ahead of the left-hand catalytic converter.

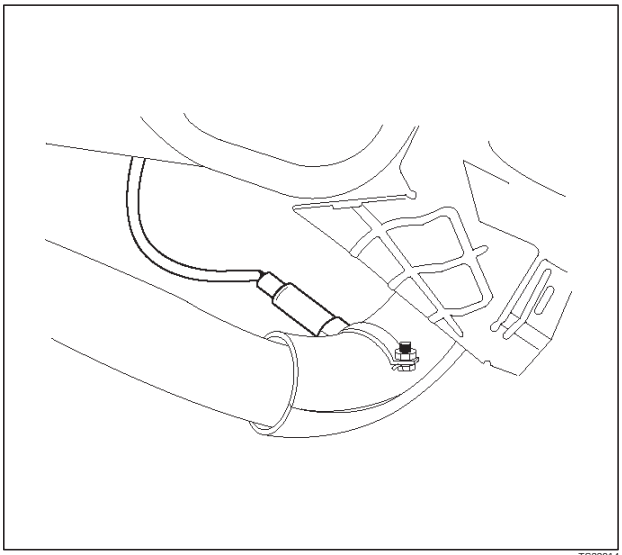

TS22914

- Bank 2 sensor 2 is mounted behind the left-hand catalytic converter.

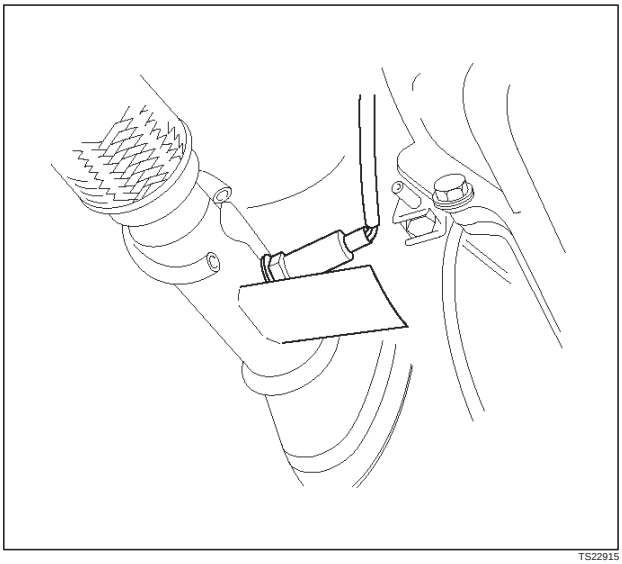

TS22915

Downloaded from www.Manualslib.com manuals search engine

3. Disconnect the pigtail from the wiring harness.

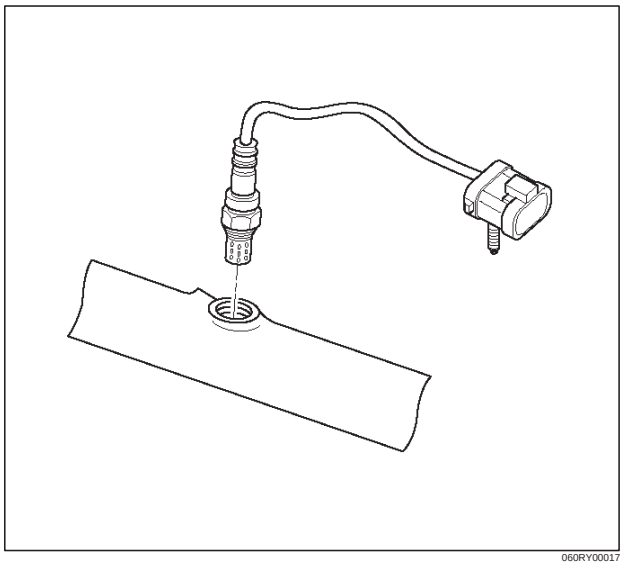

060RY00017

IMPORTANT: The pigtail is permanently attached to the sensor. Be careful not to pull the wires out.

NOTE: Do not use a torch to remove an HO2S unless the sensor is being replaced. Using a torch could damage the sensor.

4. Remove the sensor from the exhaust pipe.
   - Because of the expansion and contraction of the metal in the exhaust system over time, this may be difficult if the engine temperature is below 48˚C (120˚F).

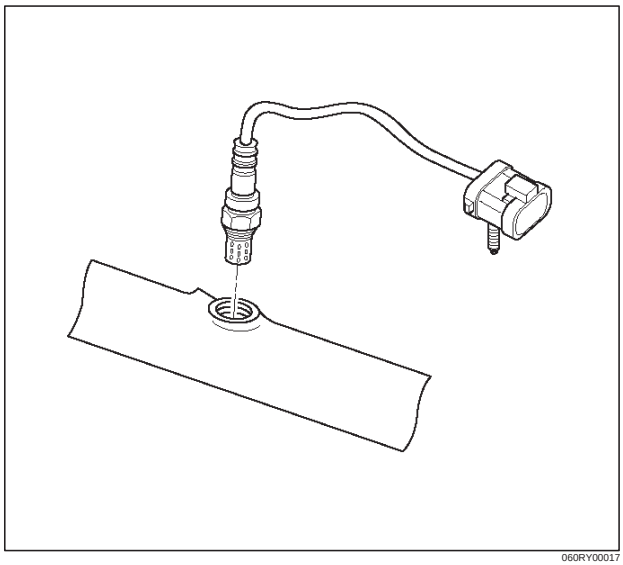

060RY00017

Inspection Procedure

All four sensors are identical. Inspect each in the same way.

1. Inspect the pigtail and the electrical connector for grease, dirt, corrosion, and bare wires or worn insulation.
2. Inspect the louvered end of the sensor for grease, dirt, or other contaminations.

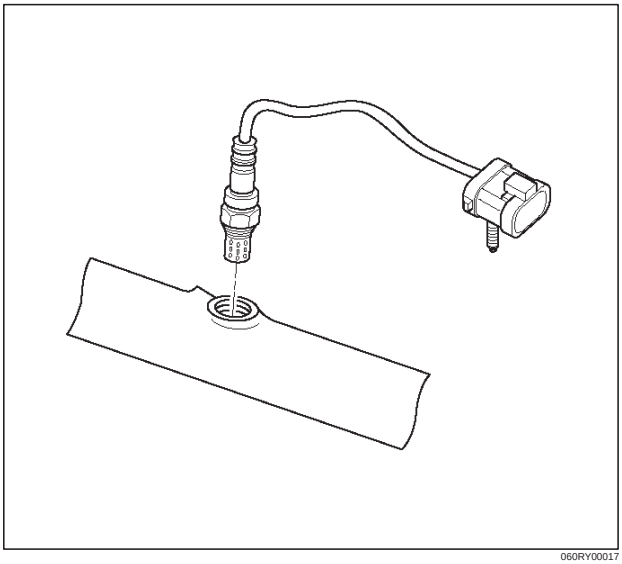

060RY00017

Installation Procedure

IMPORTANT:

- A special anti-seize compound on the HO2S threads. This compound consists of glass beads suspended in a liquid graphite solution. The graphite burns away with engine heat, but the glass beads will remain, making the sensor easier to remove.
- New or service sensors will already have the compound applied to the threads. If a sensor is removed and is to be reinstalled for any reason, the threads must have anti-seize compound applied.

1. Apply anti-seize compound or the equivalent to the threads of the oxygen sensor, if necessary.
2. Install the oxygen sensor on the exhaust pipe in its original position.

Tighten

- **Tighten the oxygen sensor to 55 N·m (40 lb ft.).**

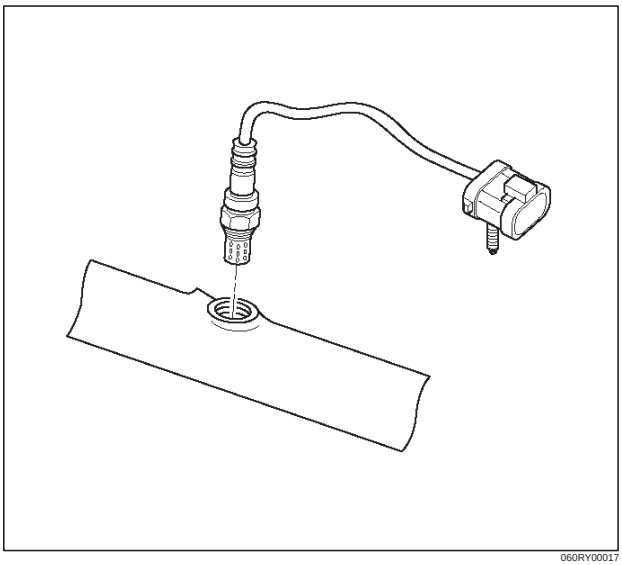

060RY00017

Downloaded from www.Manualslib.com manuals search engine

3. Connect the pigtail to the wiring harness.
4. Connect the negative battery cable.

Intake Air Temperature (IAT) Sensor

Removal Procedure

1. Disconnect the negative battery cable.
2. Remove the engine cover
3. The IAT sensor is located in the intake air duct, behind the throttle body.
4. Disconnect the electrical connector from the IAT sensor.

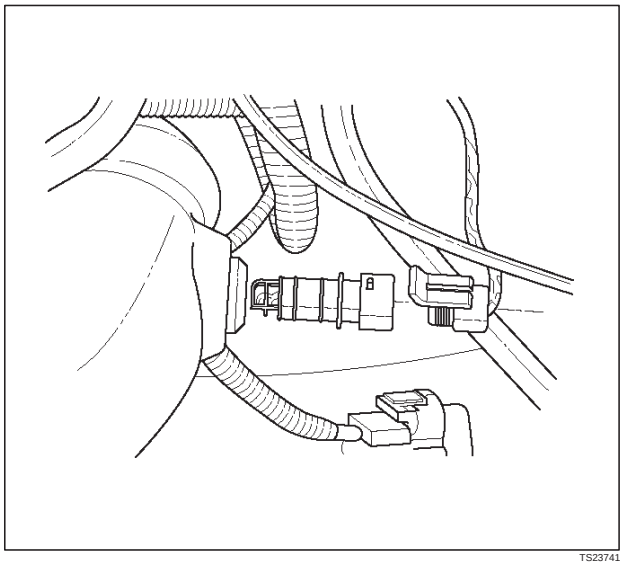

TS23741

5. Remove the IAT sensor from the intake air duct by using a rocking motion while pulling the sensor.

Installation Procedure

1. Install the IAT sensor into the grommet in the intake air duct.
2. Correct the IAT electrical connector.

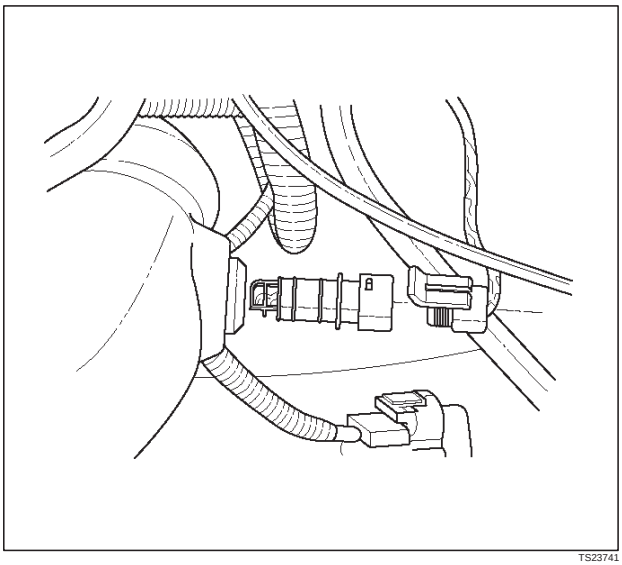

TS23741

3. Install the engine cover.
4. Connect the negative battery cable.

ION Sensing Module

Removal Procedure

1. Disconnect the negative battery cable.
2. Disconnect the ION sensing module connector.
3. Remove the bolts and the ION sensing module from the common chamber.

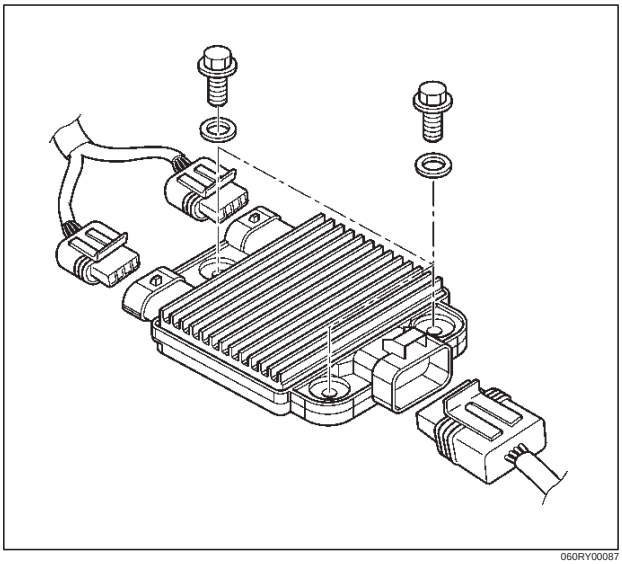

060RY00087

Installation Procedure

1. Install the ION sensing module on the common chamber with the bolts.

Tighten

- **Tighten the ION sensing module to 4 N·m (35 lb in.).**

Downloaded from www.Manualslib.com manuals search engine

2. Connect the ION sensing module connectors as shown in the illustration.

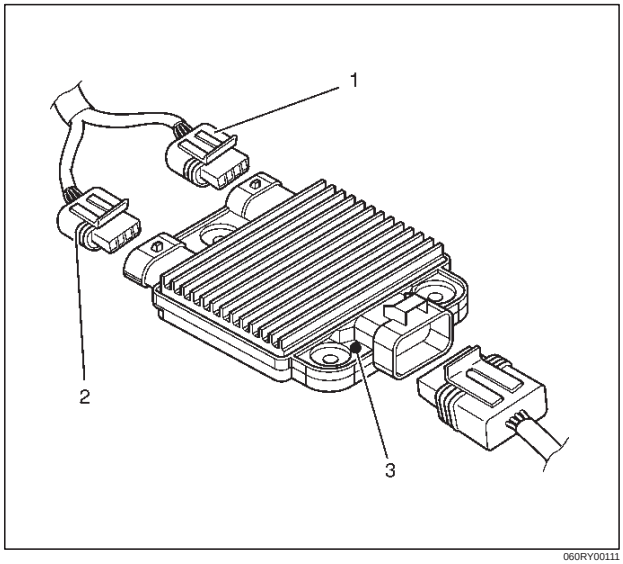

060RY00111

Legend

(1) Green Color Connector
(2) Blue Color Connector
(3) Identification Mark (6VE1 Engine Only)

3. Connect the negative battery cable.

Mass Air Flow (MAF) Sensor

Removal Procedure

1. Disconnect the negative battery cable.
2. Disconnect the electrical connector from the MAF sensor.

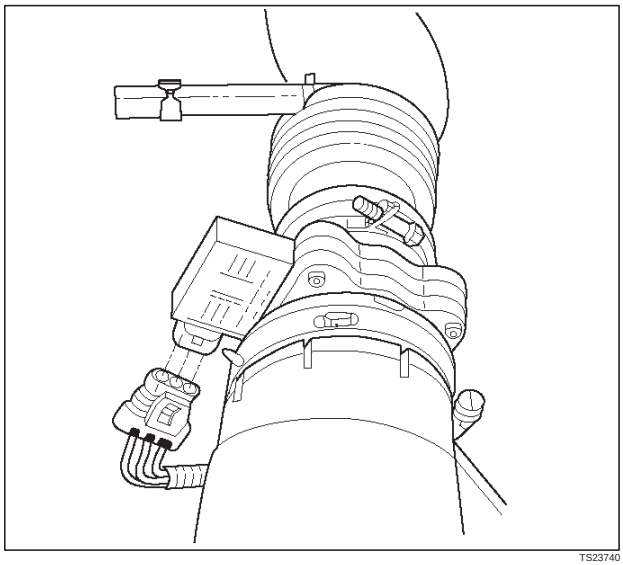

TS23740

3. Loosen the clamps which secure the intake air duct and the air cleaner to the MAF sensor.
4. Remove the intake air duct from the MAF sensor.
5. Remove the MAF sensor from the air cleaner.

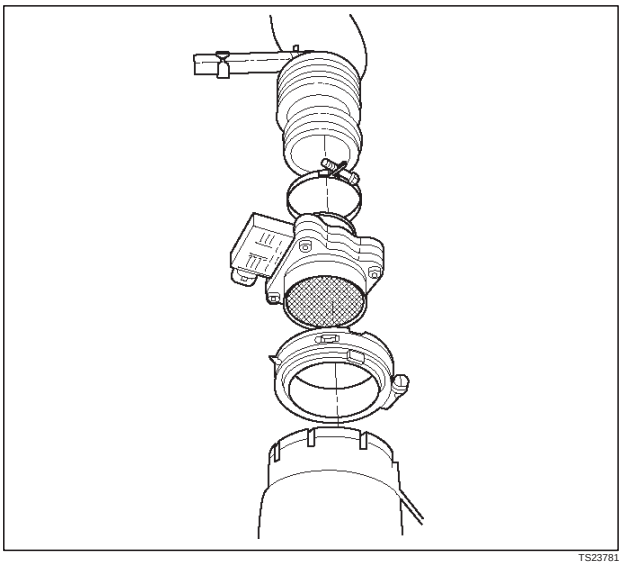

TS23781

Installation Procedure

1. Install the MAF sensor on the air cleaner with the clamp.
2. Install the intake air duct and the clamp on the MAF sensor.

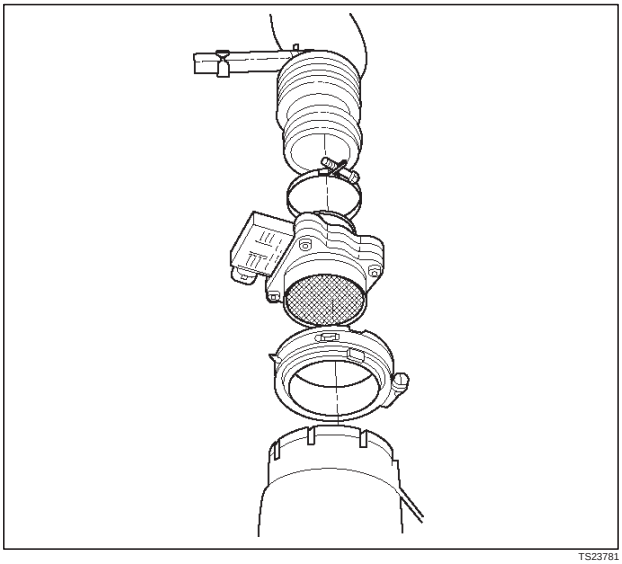

TS23781

3. Tighten the clamps to secure the MAF sensor to the intake air duct and the air cleaner.
4. Connect the MAF electrical connector.
5. Connect the negative battery cable.

Downloaded from www.Manualslib.com manuals search engine

Manifold Absolute Pressure (MAP) Sensor

Removal Procedure

1. Disconnect the negative battery cable.
2. Disconnect the electrical connector from the MAP sensor.

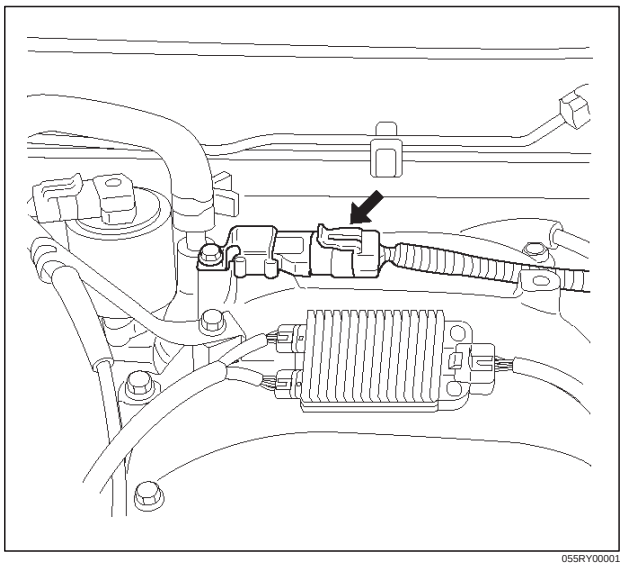

055RY00001

3. Remove the bolt securing the MAP sensor to the mounting bracket on the common chamber.
4. Remove the MAP sensor from the mounting bracket.

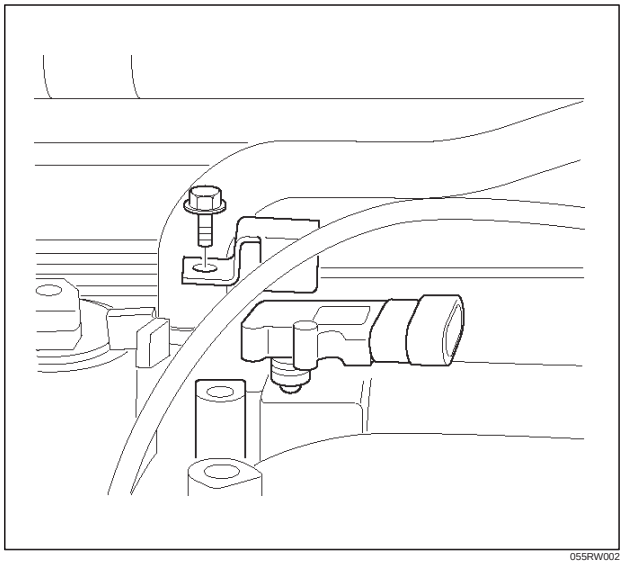

055RW002

Installation Procedure

1. Install the MAP sensor in the mounting bracket.

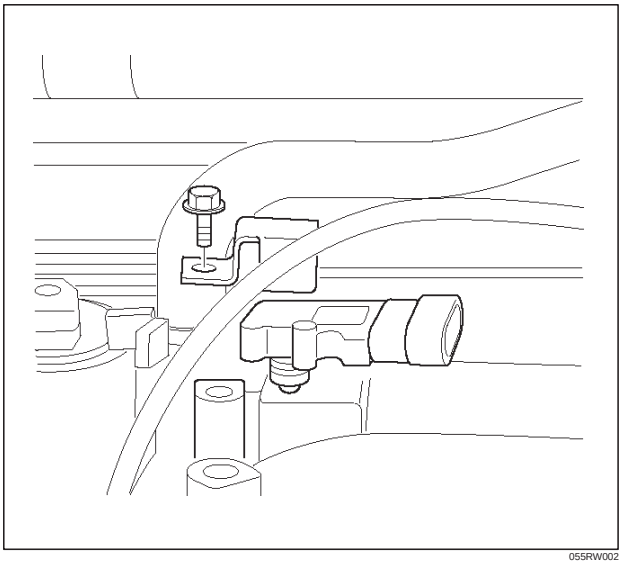

055RW002

2. Install the mounting bracket retaining bolt on the common chamber.

Tighten

- **Tighten the bolt to 20 N·m (12 lb ft.).**

3. Connect the MAP electrical connector.

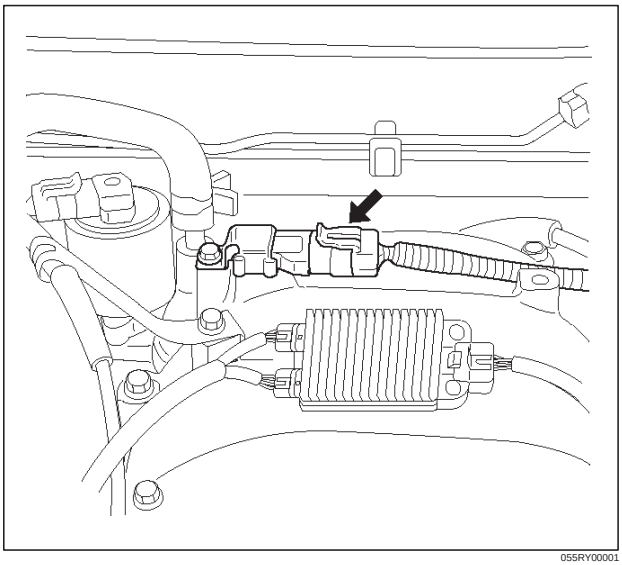

055RY00001

4. Connect the negative battery cable.

Downloaded from www.Manualslib.com manuals search engine

Malfunction Indicator Lamp (MIL)

Removal and Installation Procedure

Refer to Warning light bulb, indicator light valve, illumination light bulb, A/T indicator light bulb in Meter and Gauge.

Reduced Power Lamp

The reduced power lamp (PPL) turns on when the ignition key is moved to the ON position. It should turn off in approximately 3 seconds or immediately after the engine starts.
If the RPL turns on during vehicle operation, a vehicle system failure resulting in reduced engine output is indicated.
If both the reduced RPL and the check engine light turn on, a serious problem affecting vehicle performance is indicated.
Refer to the *OBD system check NO and RPL "ON" steady* in this manual.

Powertrain Control Module (PCM)

Service Precaution

NOTE: To prevent possible electrostatic discharge damage to the PCM, do not touch the connector pins or soldered components on the circuit board.

Electrostatic Discharge (ESD) Damage

Electronic components used in the control systems are often designed to carry very low voltage. Electronic components are susceptible to damage caused by electrostatic discharge. Less than 100 volts of static electricity can cause damage to some electronic components. By comparison, it takes as much as 4,000 volts for a person to even feel the zap of a static discharge.
There are several ways for a person to become statically charged. The most common methods of charging are by friction and by induction. An example of charging by friction is a person sliding across a car seat.
Charging by induction occurs when a person with well insulated shoes stands near a highly charged object and momentarily touches ground. Charges of the same polarity are drained off leaving the person highly charged with the opposite polarity. Static charges can cause damage, therefore, it is important to use care when handling and testing electronic components.

NOTE: To prevent possible Electrostatic Discharge damage, follow these guidelines:

- Do not touch the control module connector pins or soldered components on the control module circuit board.
- Do not open the replacement part package until the part is ready to be installed.
- Before removing the part from the package, ground the package to a known good ground on the vehicle.
- If the part has been handled while sliding across the seat, or while sitting down from a standing position, or while walking a distance, touch a known good ground before installing the part.

NOTE: To prevent internal PCM damage, the ignition must be in the "OFF" position in order to disconnect or reconnect power to the PCM (for example: battery cable, PCM pigtail, PCM fuse, jumper cables, etc.).

IMPORTANT: When replacing the production PCM with a service PCM, it is important to transfer the broadcast code and production PCM number to the service PCM label. This will allow positive identification of PCM parts throughout the service life of the vehicle. Do not record this information on the metal PCM cover.

IMPORTANT: The ignition should always be in the "OFF" position in order to install or remove the PCM connectors.

Service of the PCM should normally consist of either replacement of the PCM or EEPROM programming. If the diagnostic procedures call for the PCM to be replaced, the PCM should be checked first to ensure it is the correct part. If it is, remove the faulty PCM and install the new service PCM.

The service PCM EEPROM will not be programmed. DTC P0601 indicates the check sum error.

Removal Procedure

1. Disconnect the negative battery cable.
2. Block the wheels.
3. Remove the two screws from the PCM electrical connectors.
4. Disconnect the PCM electrical connectors.

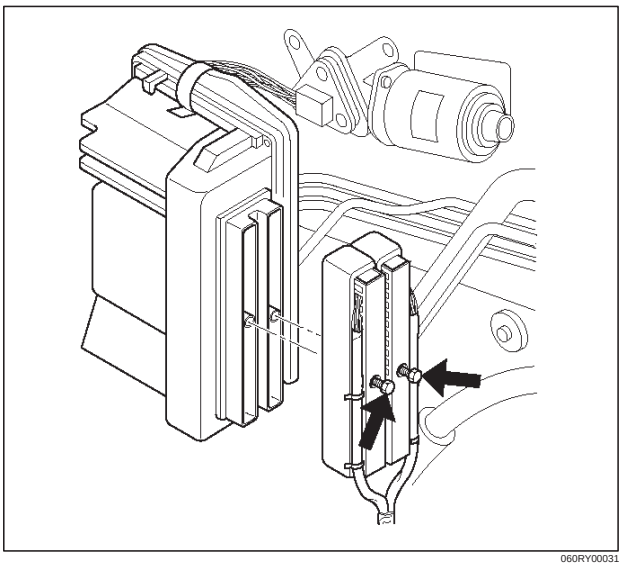

060RY00031

Downloaded from www.Manualslib.com manuals search engine

5. After removing the clip which fixes the PCM to the bracket, remove PCM.

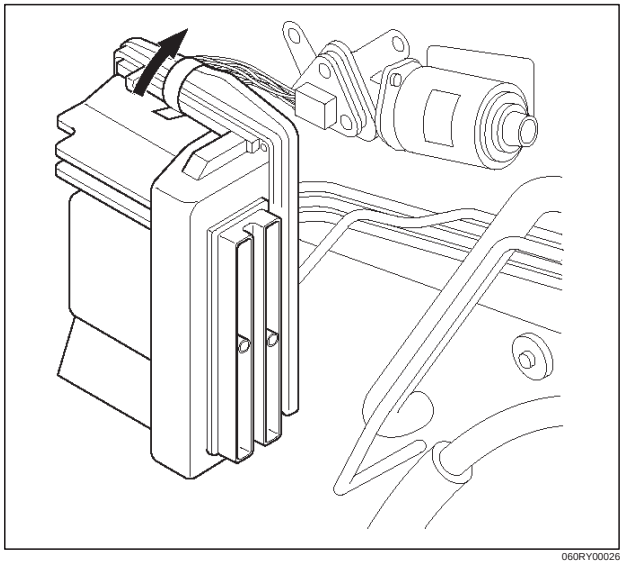

060RY00026

Installation Procedure

1. Install the PCM to bracket and fix with the clip.

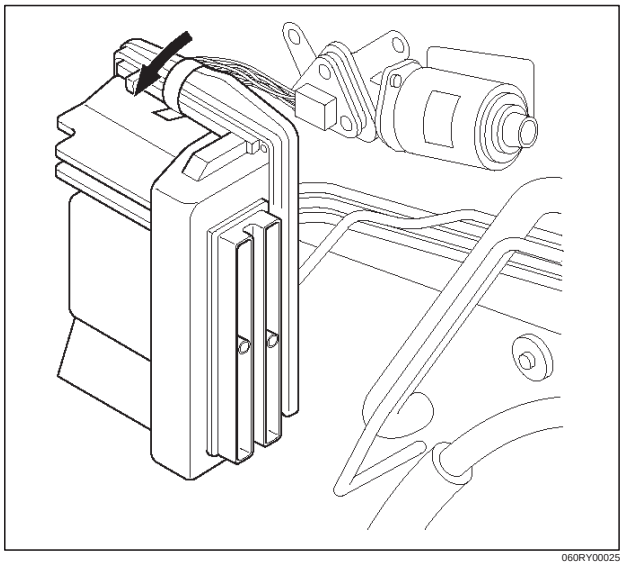

060RY00025

2. Connect the PCM electrical connectors.
3. Install the two screws to PCM electrical connectors.

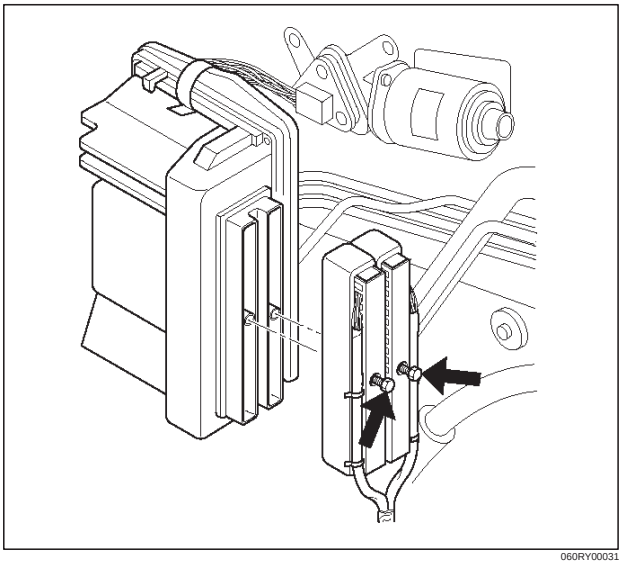

060RY00031

EEPROM

General Description

The Electronically Erasable Programmable Read Only Memory (EEPROM) is a permanent memory that is physically soldered within the PCM. The EEPROM contains program and calibration information that the PCM needs to control powertrain operation.

EEPROM Programming

1. Set-up – Ensure that the following conditions have been met:
   - The battery is fully charged.
   - The ignition is “ON.”
   - The Vehicle Interface Module cable connection at the DLC is secure.
2. Program the PCM using the latest software matching the vehicle. Refer to up-to-date Techline equipment user’s instructions.
3. If the PCM fails to program, proceed as follows:
   - Ensure that all PCM connections are OK.
   - Check the Techline equipment for the latest software version.
   - Attempt to program the PCM. If the PCM still cannot be programmed properly, replace the PCM. The replacement PCM must be programmed.

Downloaded from www.Manualslib.com manuals search engine

Functional Check

1. Perform the On-Board Diagnostic System Check.
2. Start the engine and run for one minute.
3. Scan for DTCs using the Tech 2.

Throttle Position (TP) Sensor

Removal Procedure

1. Disconnect the negative battery cable.
2. Disconnect the TPS electrical connector.
3. Remove the bolts and the TP sensor from the throttle body.

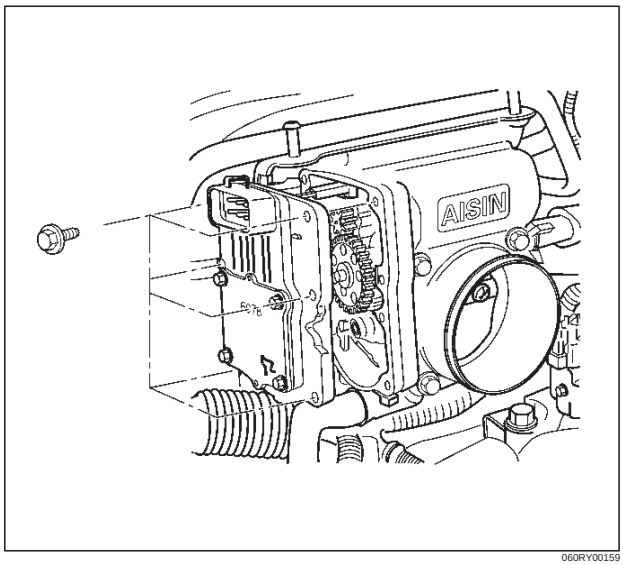

060RY00159

NOTE: Do not clean the TP sensor by soaking it in solvent. The sensor will be damaged as a result.

Function Check

Use a Tech 2 to check the TP sensor output voltage at closed throttle.

- The voltage should be under 0.85 volt.
- If the reading is greater than 0.85 volt, check the throttle shaft to see if it is binding.

Installation Procedure

1. Install the TP sensor on the throttle body with the bolts.

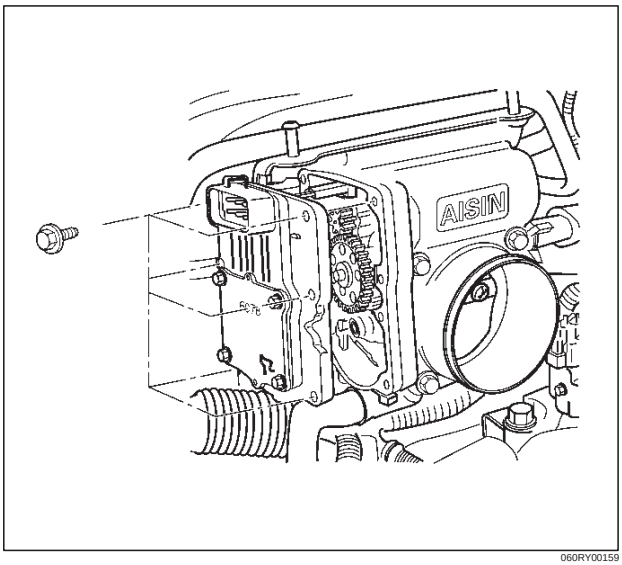

060RY00159

2. Connect the TP electrical connector.
3. Install the negative battery cable.

Vehicle Speed Sensor (VSS)

Removal Procedure

CAUTION: The VSS is located on the right side of the transfer case just ahead of the rear propeller shaft and very close to the exhaust pipes for 4WD and on the extension cover for 2WD. Be sure that the exhaust pipes are cool enough to touch before trying to remove the VSS. If the pipes are hot, you could be burned.

1. Disconnect the negative battery cable.
2. Disconnect the VSS electrical connector.

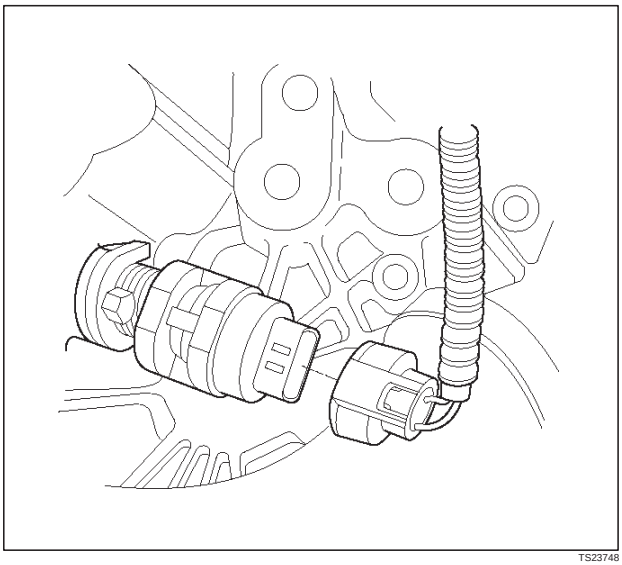

TS23748

Downloaded from www.Manualslib.com manuals search engine

3. Remove the bolt and the clamp securing the VSS in place.

IMPORTANT: Have a container ready to catch any fluid that leaks out when the VSS is removed from the transfer case for 4WD and on the extension cover for 2WD.

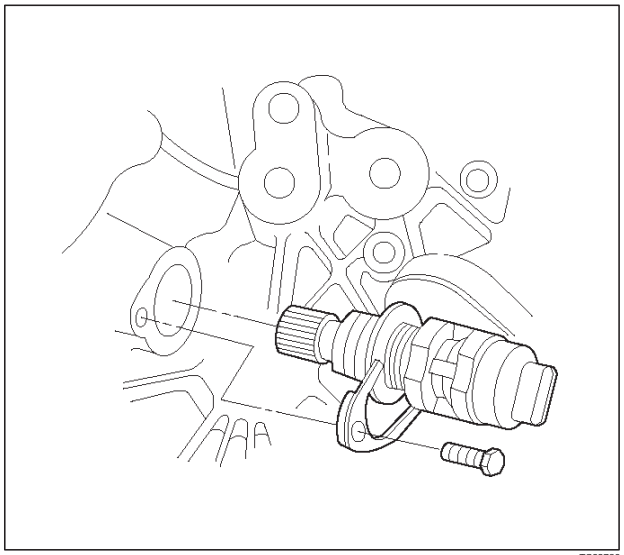

TS23780

4. Remove the VSS from the transfer case by wiggling it slightly and pulling it straight out.

Inspection Procedure

1. Inspect the electrical connector for signs of corrosion or warping. Replace the VSS if the electrical connector is corroded or warped.
2. Inspect the VSS driven gear for chips, breaks, or worn condition. Replace the VSS if the driven gear is chipped, broken or worn.
3. Inspect the O-ring for wear, nicks, tears, or looseness. Replace the O-ring if necessary.

Installation Procedure

1. Install the VSS in the transfer case with the notch for the connector facing the rear.
2. Secure the VSS in place with the clamp and the bolt.

Tighten

- **Tighten the bolt to 16 N·m (12 lb ft.).**

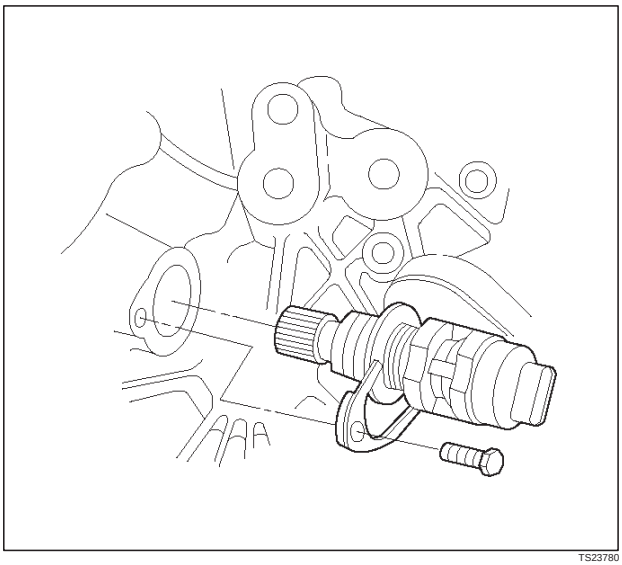

TS23780

3. Connect the VSS electrical connector.

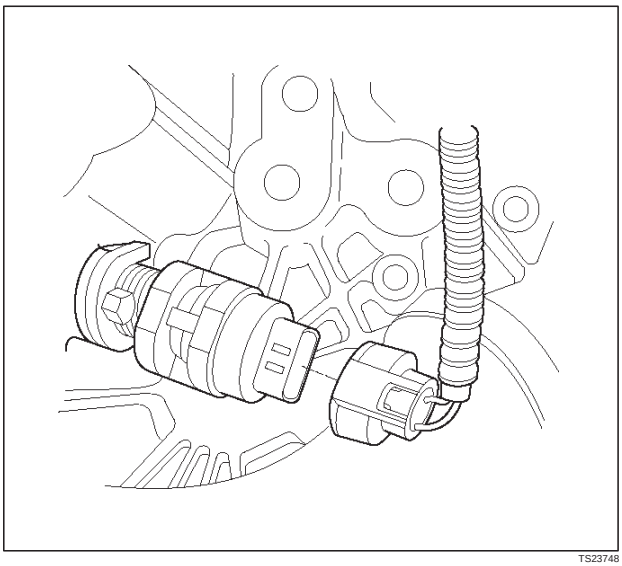

TS23748

4. Check the transfer case oil level. Add fluid if necessary.
5. Connect the negative battery cable.

Downloaded from www.Manualslib.com manuals search engine

Air Cleaner/Air Filter

Removal Procedure

1. Loosen the clamp between the air cleaner lid and the mass air flow sensor.

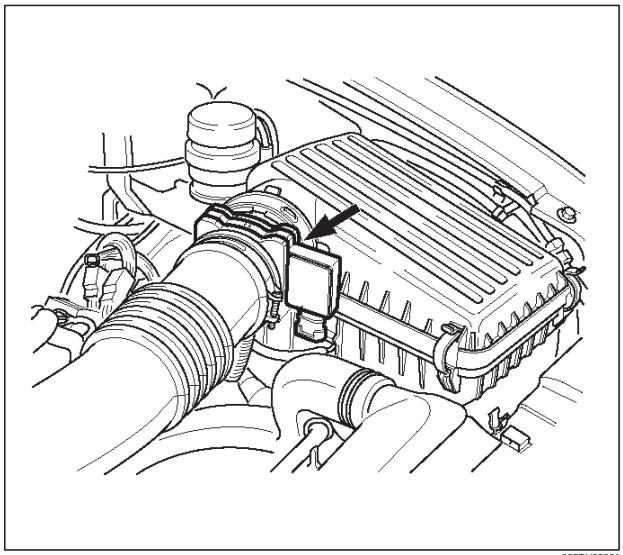

025RY00001

2. Release the four latches securing the lid to the air cleaner housing.
3. Remove the air cleaner lid.
4. Remove the air filter element.
5. Remove the retaining bolts and the air cleaner housing from the vehicle.

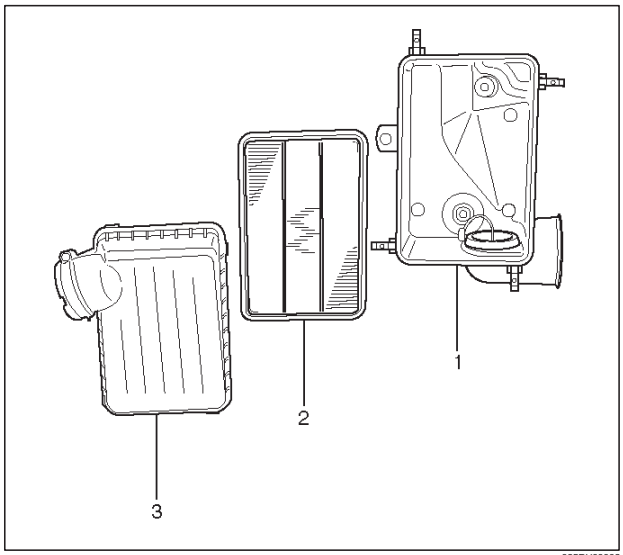

025RY00002

Legend

(1) Air Cleaner Housing
(2) Air Filter Element
(3) Air Cleaner Lid

Installation Procedure

1. Install the air cleaner housing in the vehicle with the retaining bolts.
2. Install the air filter element in the air cleaner housing.
3. Install the air cleaner lid on the MAF sensor and the air cleaner housing.

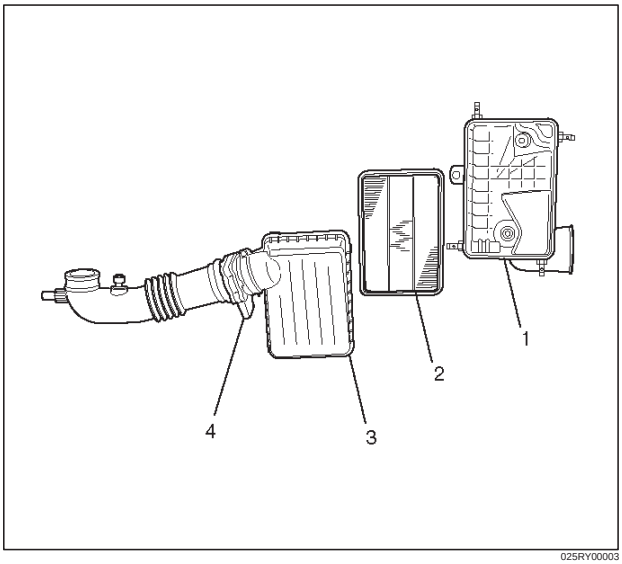

025RY00003

Legend

(1) Air Cleaner Housing
(2) Air Filter Element
(3) Air Cleaner Lid
(4) Mass Air Flow Sensor

4. Tighten the clamp and secure the four latches between the lid and the air cleaner housing.

Common Chamber

Removal and Installation Procedure

Refer to Common Chamber in Engine Mechanical section.

Downloaded from www.Manualslib.com manuals search engine

Accelerator Pedal Replacement

Removal Procedure

1. Disconnect the negative battery cable.
2. Disconnect the electrical harness from the accelerator position sensor.

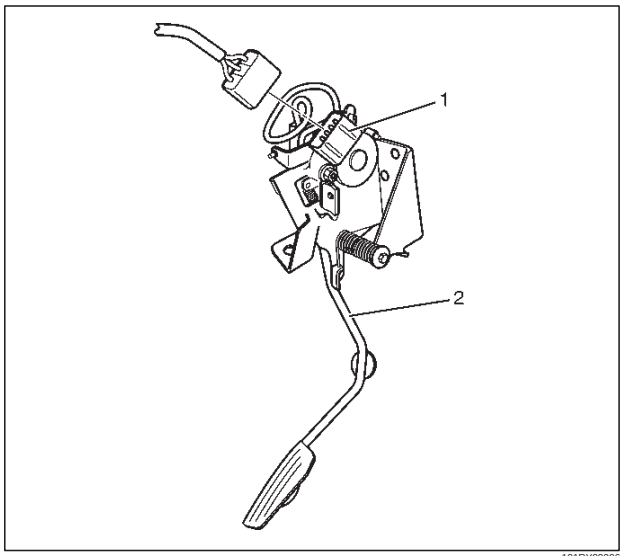

101RY00006

Legend

(1) Accelerator Position Sensor
(2) Accelerator Pedal Assembly

3. Remove the two screws from the accelerator pedal assembly.

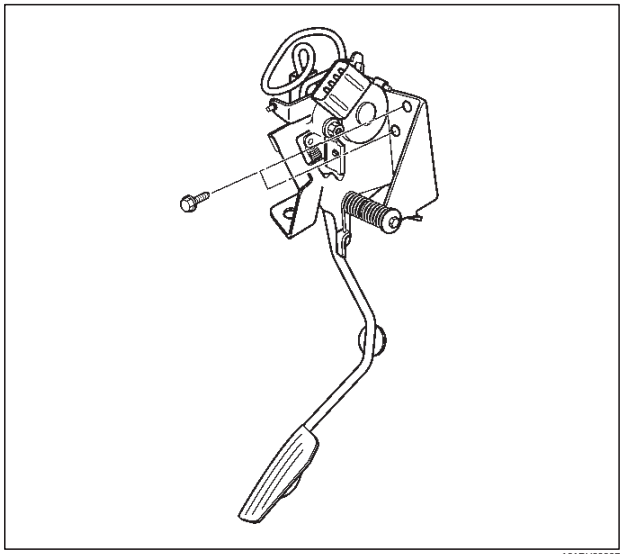

101RY00007

4. Remove the accelerator pedal assembly from the bulkhead.

Installation Procedure

1. Install the accelerator pedal assembly on the bulkhead.
2. Install the two screws to the accelerator pedal assembly.

Tighten

- **Tighten the screws to 22 N·m (16 lb ft.).**

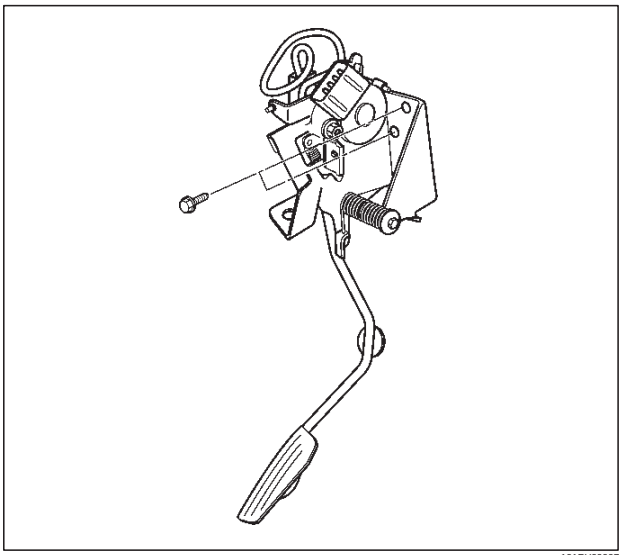

101RY00007

3. Connect the electrical harness to the accelerator position sensor.

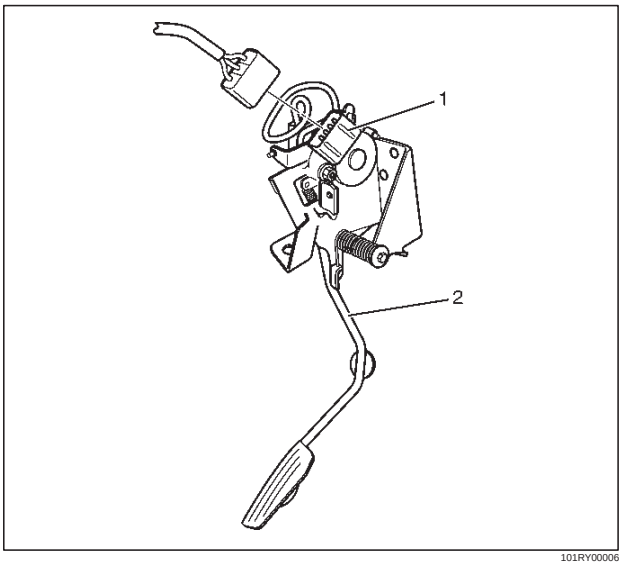

101RY00006

Legend

(1) Accelerator Position Sensor
(2) Accelerator Pedal Assembly

4. Install the negative battery cable.

Downloaded from www.Manualslib.com manuals search engine

Fuel Filler Cap

General Description

The fuel filler cap includes a vacuum valve and a pressure valve.
If high vacuum or high pressure occurs in the fuel tank, each valve works to adjust the pressure in order to prevent damage of the tank.

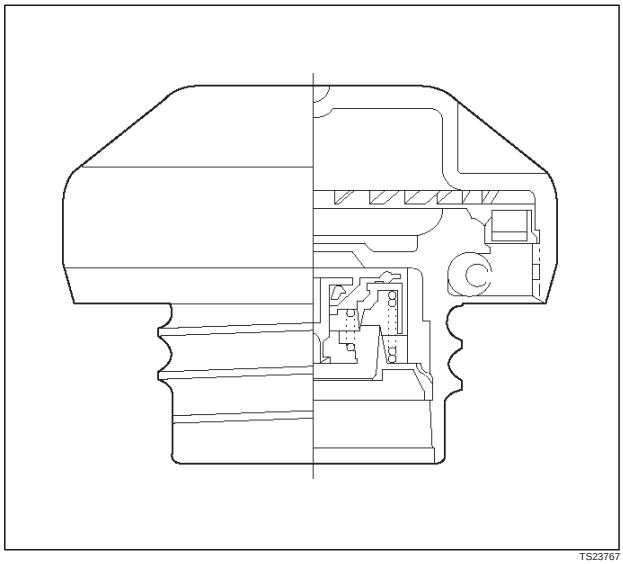

TS23767

Inspection Procedure

NOTE: Replace the fuel filler cap with the same type of filler cap that was originally installed on the vehicle.

- Check the seal ring in the filler cap for any abnormality and for seal condition.
- Replace the filler cap if any abnormality is found.

Fuel Filter

Removal Procedure

1. Disconnect the negative battery cable.
2. Remove the fuel filler cap.

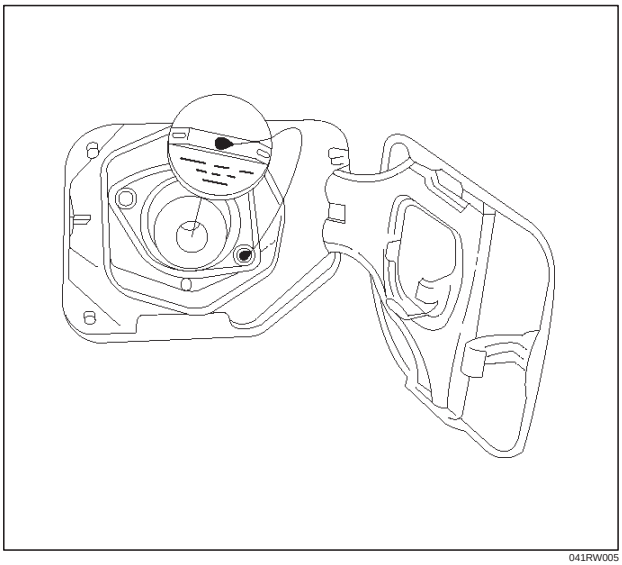

041RW005

3. Disconnect the fuel line from the fuel filter on the engine side.
4. Disconnect the fuel line from the fuel filter on the fuel tank side.

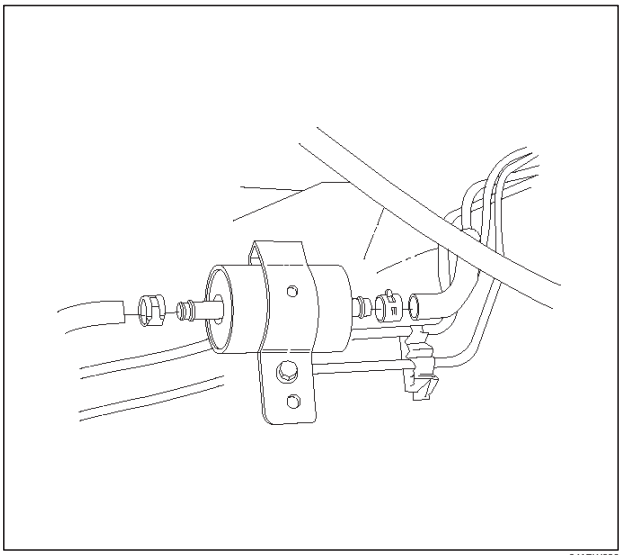

041RW006

Downloaded from www.Manualslib.com manuals search engine

5. Remove the bolt on the fuel filter holder.

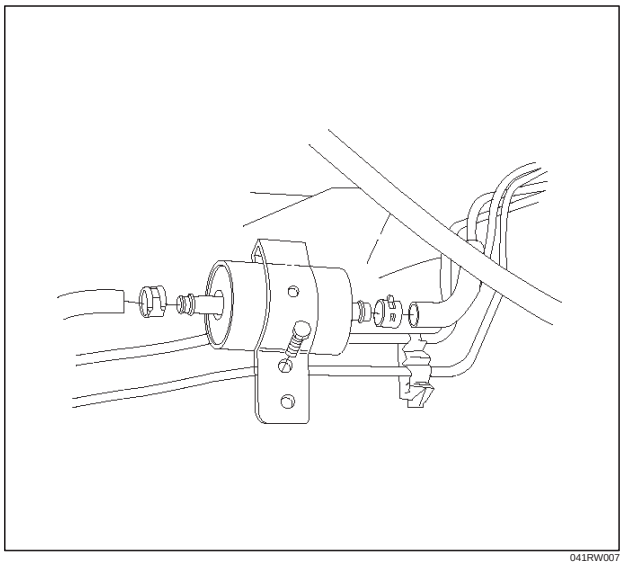

041RW007

6. Remove the fuel filter.

Inspection Procedure

1. Replace the fuel filter when the following occur:
   - Fuel leaks from the fuel filter body.
   - The fuel filter body is damaged.
   - The fuel filter is clogged with dirt or sediment.

Installation Procedure

1. Install the fuel filter in the correct direction.
2. Install the bolt on the fuel filter holder.

Tighten

- **Tighten the screws to 20 N·m (14 lb ft.).**

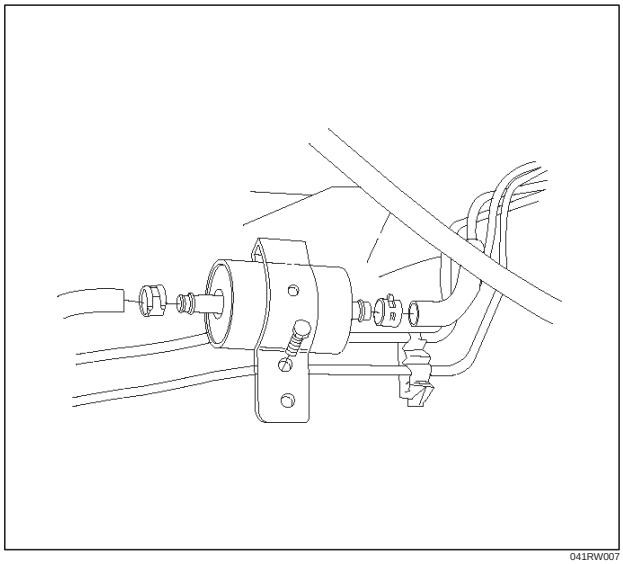

041RW007

3. Connect the fuel line on the engine side.
4. Connect the fuel line on the fuel tank side.

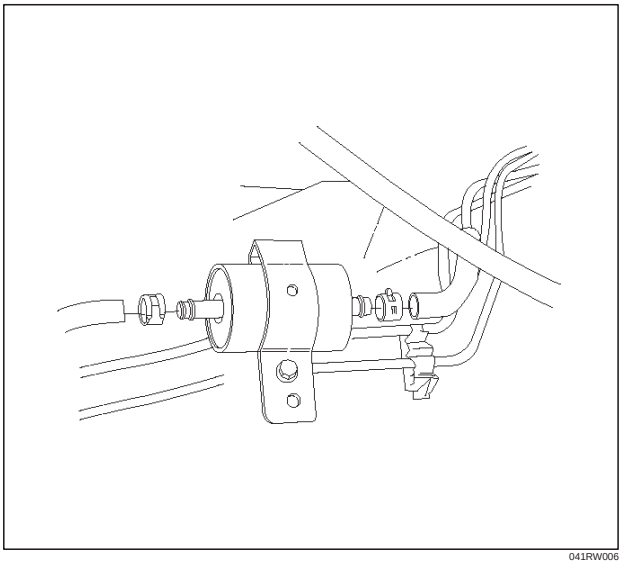

041RW006

5. Install the fuel filler cap.

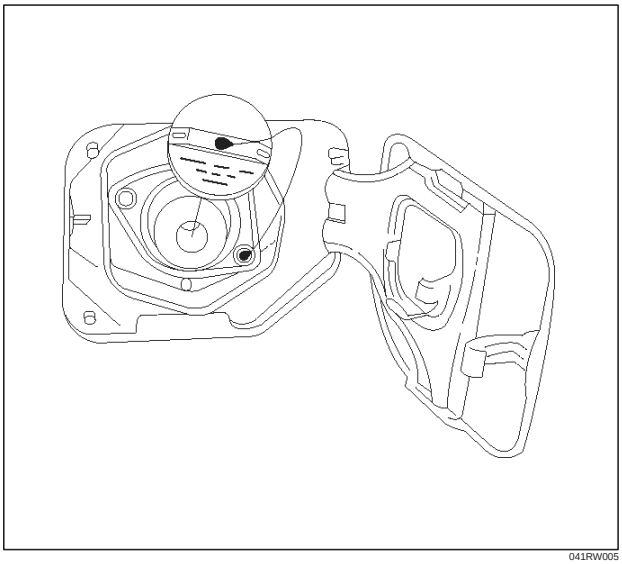

041RW005

6. Connect the negative battery cable.

Downloaded from www.Manualslib.com manuals search engine

Fuel Gauge Unit

Removal Procedure

1. Disconnect the negative battery cable.
2. Loosen the fuel filler cap.
3. Drain the fuel from the tank.

Tighten

- **Tighten the drain plug to 20 N·m (14 lb ft.).**

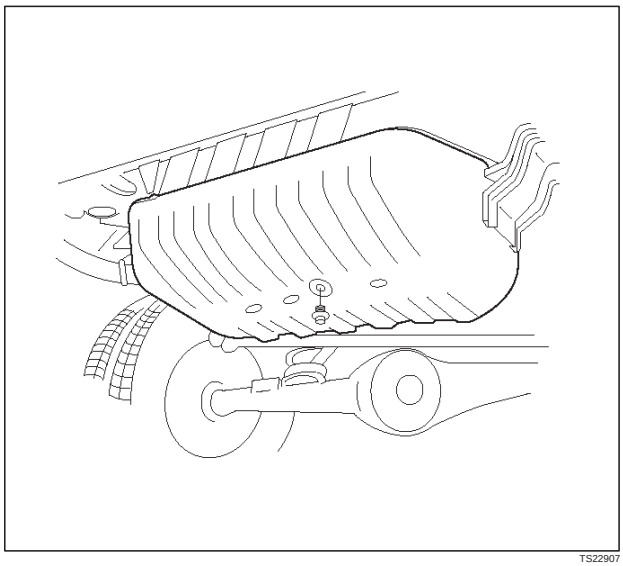

TS22907

4. Disconnect the wiring connector from the fuel gauge unit.

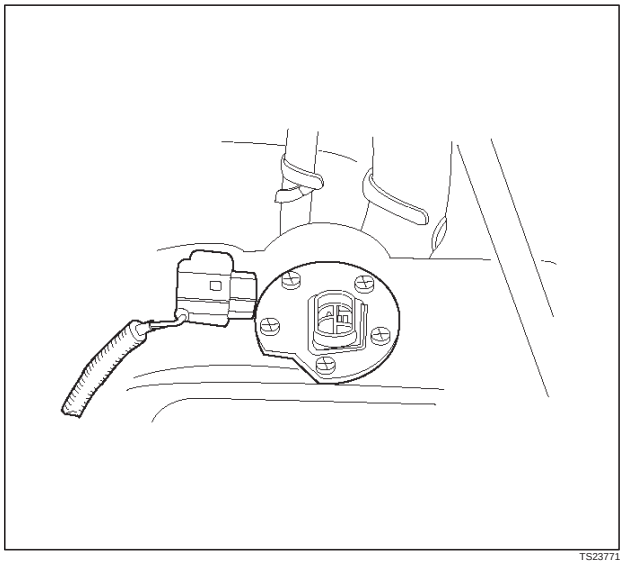

TS23771

5. Remove the fuel gauge unit retaining screws.
6. Remove the fuel gauge unit.
   - Cover or plug the fuel tank to prevent dust, dirt, or debris from entering the tank.

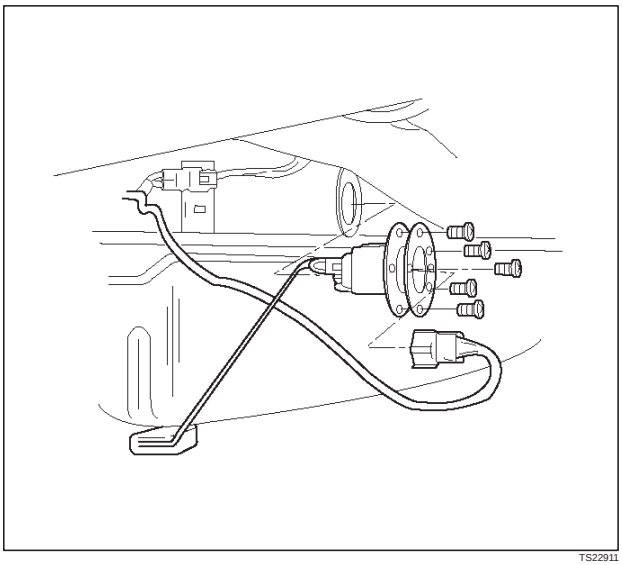

TS22911

Installation Procedure

1. Install the fuel gauge unit.
2. Install the fuel gauge unit retaining screws.

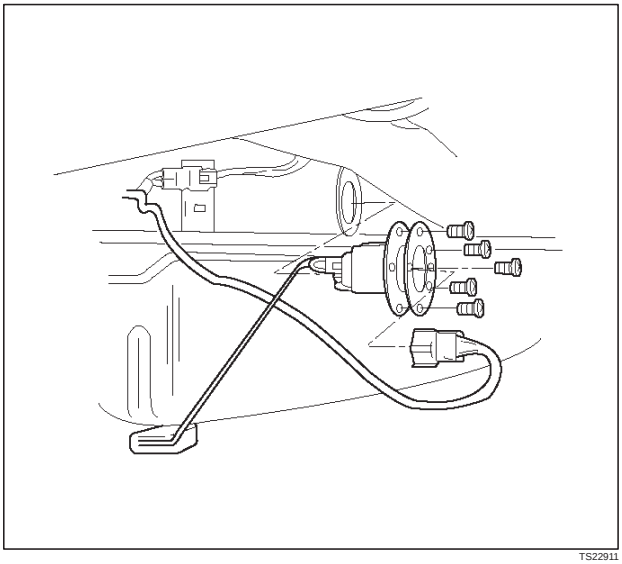

TS22911

Downloaded from www.Manualslib.com manuals search engine

3. Connect the wiring connector to the fuel gauge unit.

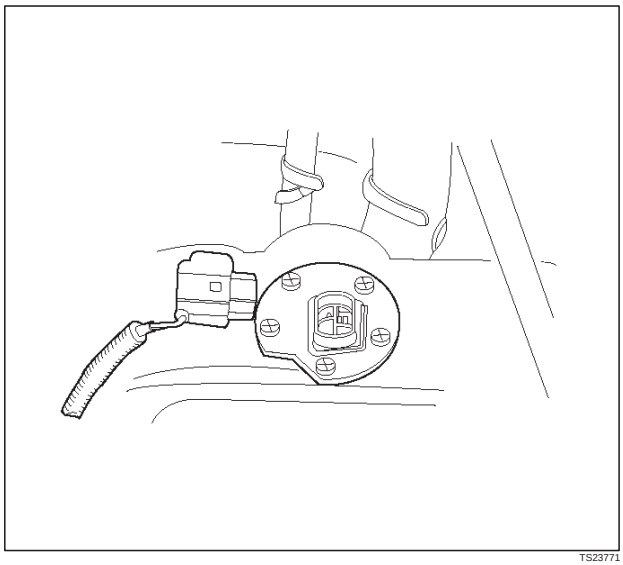

TS23771

4. Fill the fuel tank with fuel.
   - Tighten the fuel filler cap.
   - Check for leaks at the fuel gauge unit gasket.
5. Connect the negative battery cable.

Fuel Injectors

Removal Procedure

NOTE: If the fuel injectors are leaking, the engine oil may be contaminated with fuel. Check the oil for signs of contamination and change the oil and the filter if necessary.

NOTE: Use care in removing the fuel injectors in order to prevent damage to the fuel injector electrical connector pins or the fuel injector nozzles. The fuel injector is an electrical component and should not be immersed in any type of cleaner as this may damage the fuel injector.

IMPORTANT: Fuel injectors are serviced as a complete assembly only.

1. Disconnect the negative battery cable.
2. Remove the common chamber. Refer to *Common Chamber in Engine Mechanical* section.
3. Remove the fuel rail. Refer to *Fuel Rail* section.

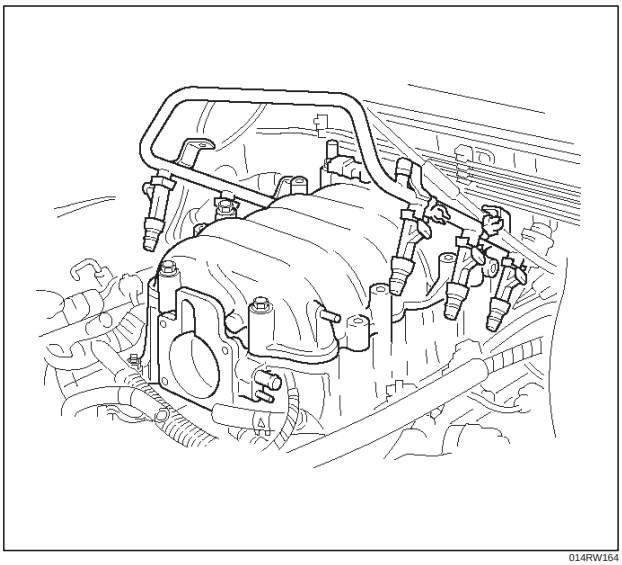

014RW164

4. Remove the injector retainer clip.

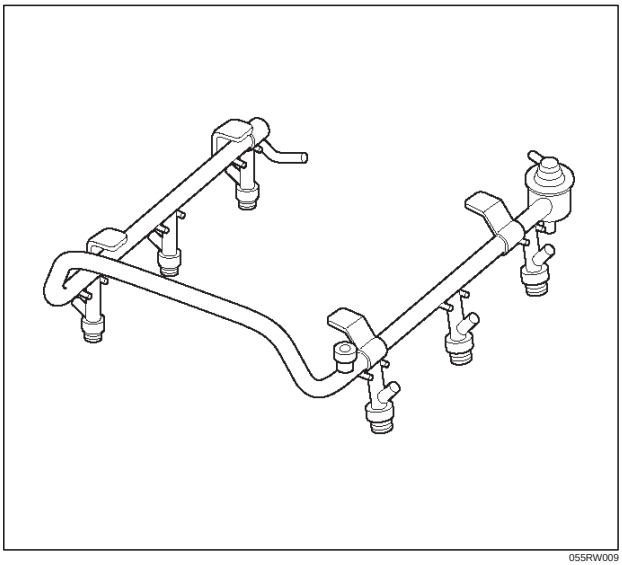

055RW009

5. Remove the fuel injector assembly.
6. Remove the O-ring from the fuel injector.
7. Remove the O-ring backup from the fuel injector .

Inspection Procedure

1. Inspect the O-rings for cracks or leaks.
2. Replace worn or damaged O-rings.
3. Lubricate the new O-rings with engine oil before installation.

Downloaded from www.Manualslib.com manuals search engine

Installation Procedure

1. Install the O-ring backup on the fuel injector.
2. Install the new O-ring on the fuel injector.
3. Install the fuel injector on the fuel rail.

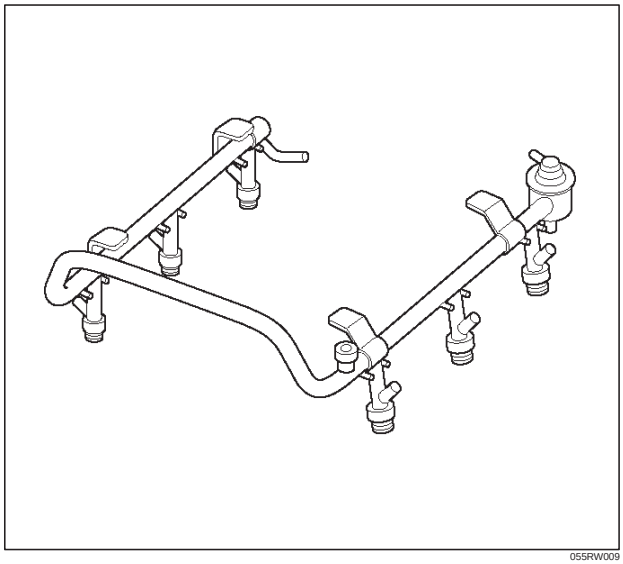

055RW009

4. Use new fuel injector retainer clips to retain the fuel injector to the fuel rail.
5. Coat the end of the fuel injector with gasoline.
6. Install the fuel rail. Refer to *Fuel Rail* section.

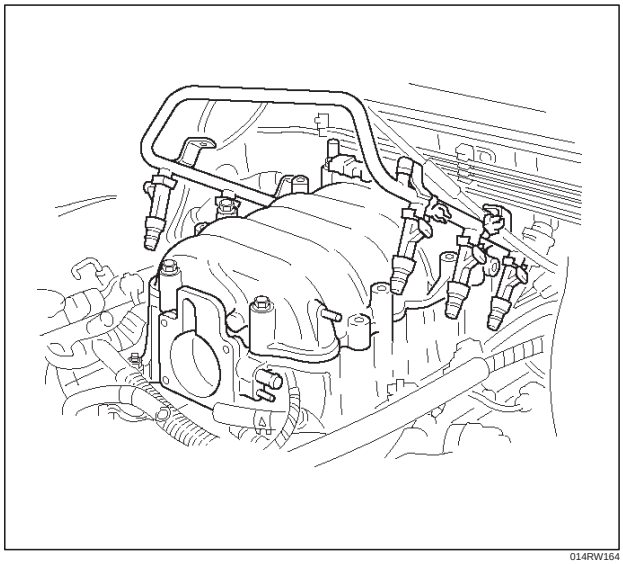

014RW164

7. Install the common chamber. Refer to *Common Chamber in Engine Mechanical* section.
8. Install the engine cover.
9. Connect the negative battery cable.

Fuel Metering System

Fuel Pressure Relief Procedure

CAUTION: To reduce the risk of fire and personal injury, there are necessary to relieve the fuel system pressure filler and gauge unit before servicing the fuel system components.

CAUTION: After relieving the system pressure, a small amount of fuel may be released when servicing fuel lines or connections. Reduce the chance of personal injury by covering the fuel line fittings with a shop towel before you disconnect the fittings. The towels will absorb any fuel that may leak out. When the disconnect is completed, place the towel in an approved container.

1. Remove the fuel cap.
2. Remove the fuel pump relay from the underhood relay box. Refer to *Fuel Pump Relay* section.

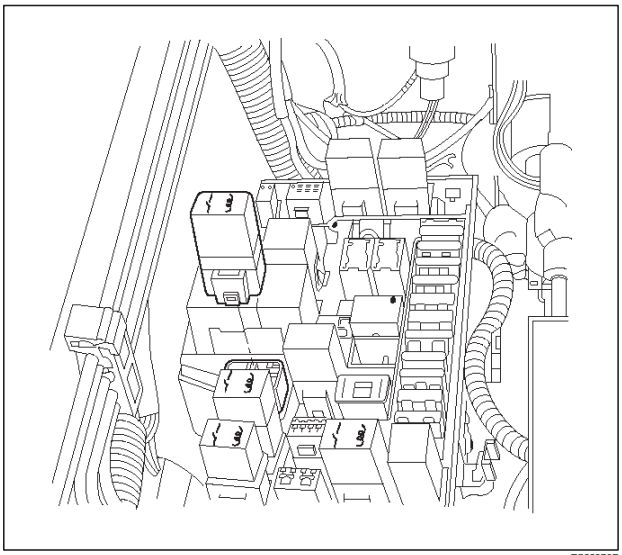

TS23976R

3. Start the engine and allow it to stall.
4. Crank the engine for 30 seconds.
5. Disconnect the negative battery cable.

Downloaded from www.Manualslib.com manuals search engine

Fuel Pump Assembly

Removal Procedure

1. Disconnect the negative battery cable.
2. Drain all the fuel from the tank.
3. Install and tighten the drain plug.

Tighten

- **Tighten the drain plug to 20 N·m (14 lb ft.).**

4. Remove the fuel tank. Refer to *Fuel Tank* section.
5. Remove the retaining screws from the fuel tank.
6. Remove the fuel pump assembly from the fuel tank.
   - Cover the fuel pump opening in order to prevent dust, dirt, or debris from entering the fuel tank.

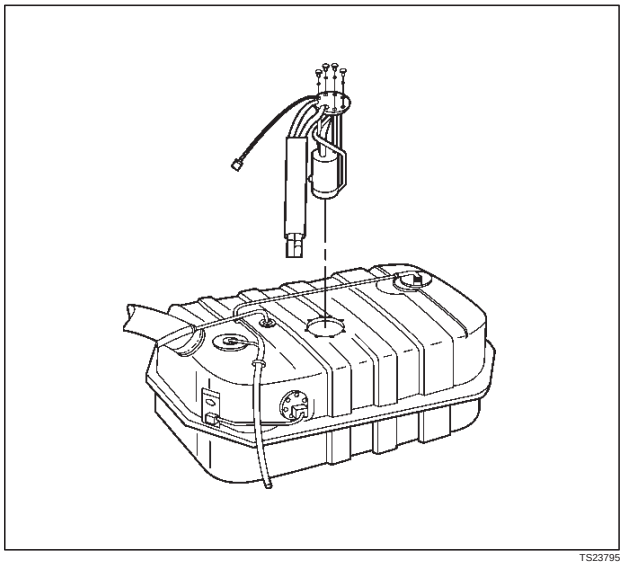

TS23795

Inspection Procedure

1. Inspect the fuel pump gasket for tears, cracks, stretching, or rotting. If any of these conditions are found, replace the fuel pump gasket.
2. Inspect the in-tank fuel filter for tears or evidence of dirt, debris, or water in the fuel. If any of these conditions are found, replace the in-tank fuel filter.

Installation Procedure

1. Install the fuel pump assembly.

Tighten

- **Tighten the fuel pump assembly mounting bolts to 3 N·m (27 lb ft.).**

2. Install the fuel pump assembly retaining screws.
3. Install the fuel tank assembly. Refer to *Fuel Tank* section.
4. Fill the tank with fuel.
5. Tighten the fuel filler cap.
6. Connect the negative battery cable.

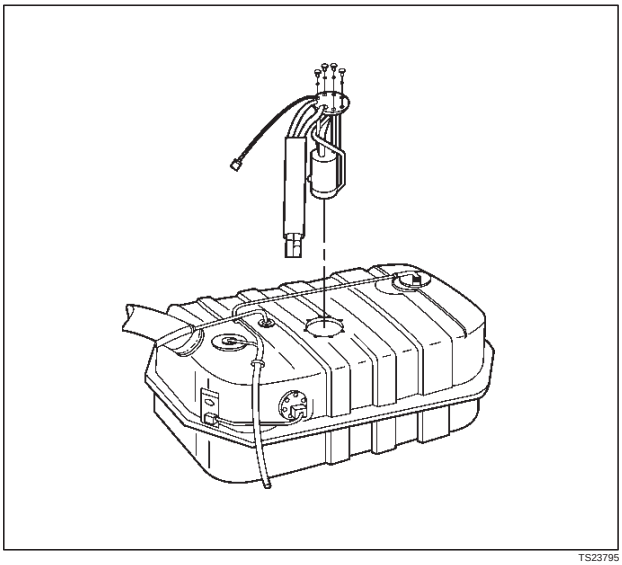

TS23795

Fuel Pump Relay

Removal Procedure

1. Remove the fuse and relay box cover from under the hood.
2. Consult the diagram on the cover to determine which is the correct relay.
3. Insert a small screwdriver into the catch slot on the forward side of the fuel pump relay.
   - The screwdriver blade will release the catch inside.

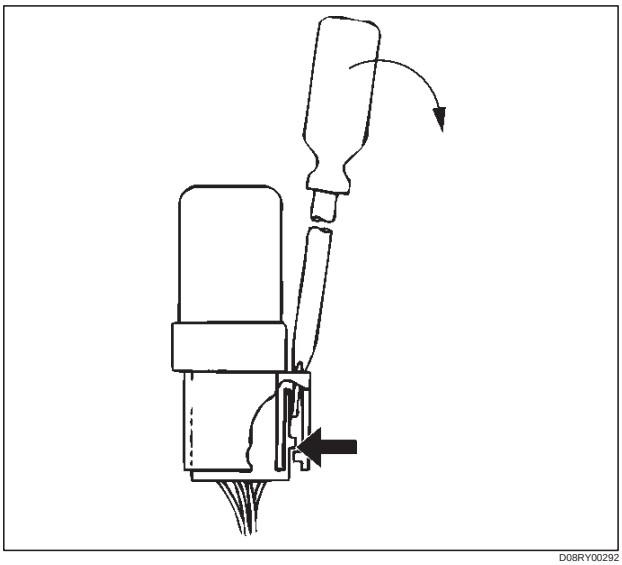

D08RY00292

Downloaded from www.Manualslib.com manuals search engine

4. Pull the relay straight up and out of the fuse and relay box.

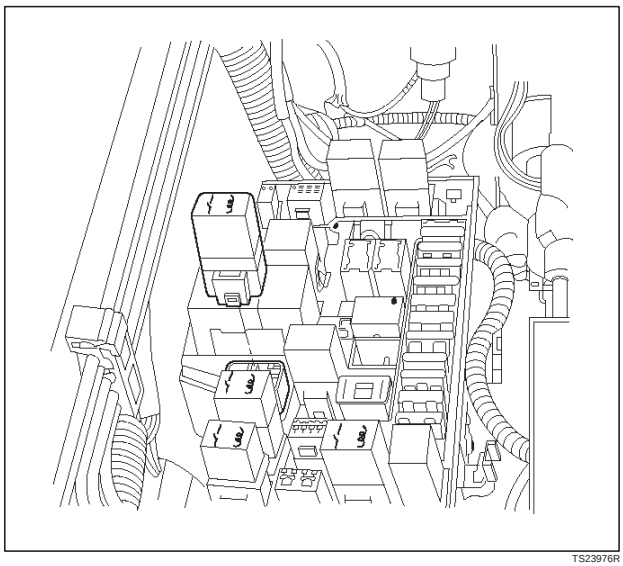

TS23976R

Installation Procedure

1. Insert the relay into the correct place in the fuse and relay box with the catch slot facing forward.
2. Press down until the catch engages.
   - An audible “click” will be heard.

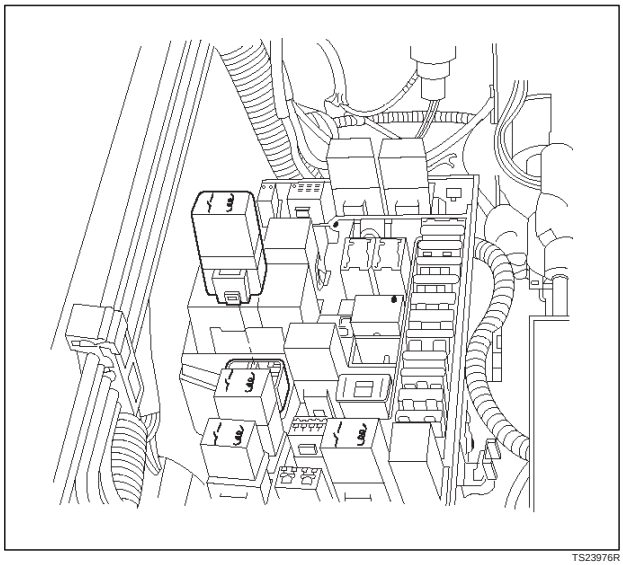

TS23976R

3. Install the fuse and relay box cover.

Fuel Rail Assembly

Removal Procedure

NOTE:

- Do not attempt to remove the fuel inlet fitting on the fuel rail. It is staked in place. Removing the fuel inlet fitting will result in damage to the fuel rail or the internal O-ring seal.
- Use care when removing the fuel rail assembly in order to prevent damage to the injector electrical connector terminals and the injector spray tips.
- Fittings should be capped and holes plugged during servicing to prevent dirt and other contaminants from entering open lines and passages.

IMPORTANT: An eight-digit identification number is stamped on the side of the fuel rail. Refer to this number when you service the fuel rail or when a replacement part is required.

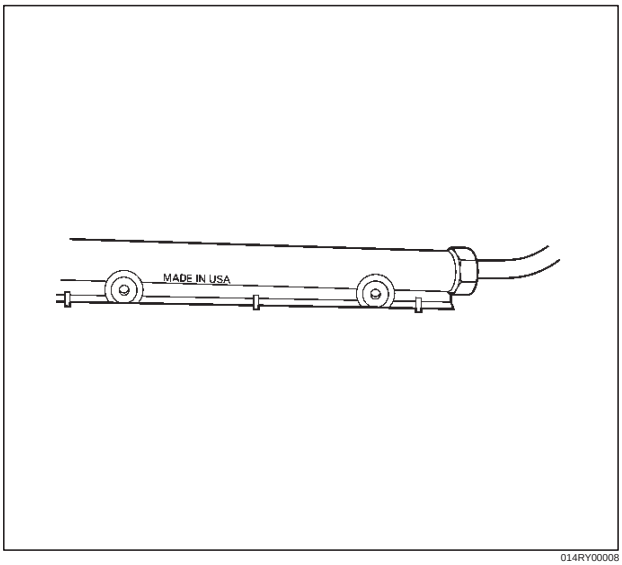

014RY00008

Before removal, the fuel rail assembly may be cleaned with a spray type engine cleaner. Follow the spray package instructions. Do not immerse the fuel rails in liquid cleaning solvent.

1. Depressurize the fuel system. Refer to Fuel Pressure Relief Procedure in this Section.
2. Disconnect the negative battery cable.
3. Remove the engine cover.
4. Disconnect the throttle position sensor electrical connector from throttle body.
5. Disconnect the connectors from manifold absolute pressure sensor, solenoid valve, electric vacuum sensing valve.
6. Disconnect the vacuum hose on canister VSV and positive crankcase ventilation hose.

Downloaded from www.Manualslib.com manuals search engine

7. Remove the common chamber. Refer to the common chamber in Engine Mechanical section.
   1. Lift up carefully on the fuel injectors. Do not separate the fuel injectors from the fuel rail.
   2. If an injector becomes separated from the fuel rail, the infector O-ring seals and the retainer clip must be replaced.
   3. Drain residual fuel into an approved container.

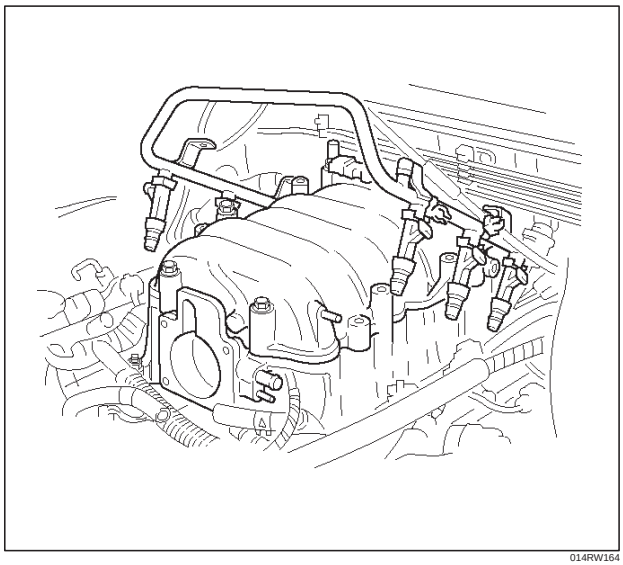

014RW164

8. If removal of the fuel pressure regulator is necessary, refer to *Fuel Pressure Regulator* section.
9. If removal of the fuel injectors is necessary, refer to *Fuel Injectors* section.

Installation Procedure

1. If the fuel injectors were removed, install them. Refer to *Fuel Injectors* section.
2. If the fuel pressure regulator was removed, install it. Refer to *Fuel Pressure Regulator* section.
3. Install the common chamber. Refer to common chamber in engine Mechanical section.

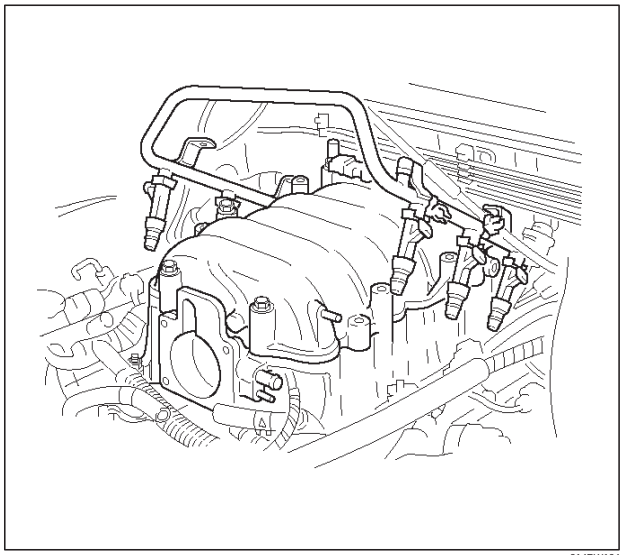

014RW164

4. Connect the vacuum hose on Canister VSV and positive crankcase ventilation hose.
5. Connect the connectors to manifold absolute pressure sensor, solenoid valve, electric vacuum sensing valve.
6. Connect the throttle position sensor electrical connector to throttle body.
7. Install the engine cover.
8. Connect the negative battery cable.
9. Crank the engine until it starts. Cranking the engine may take longer than usual due to trapped air in the fuel rail and in the injectors.

Fuel Tank

Removal Procedure

1. Disconnect the negative battery cable.
2. Loosen the fuel filler cap.
3. Drain the fuel from the tank into an approved container.
4. Install and tighten the drain plug.

Tighten

- **Tighten the drain plug to 20 N·m (14 lb ft.).**

5. Disconnect the fuel filler hose at the fuel tank.
6. Disconnect the air breather hose at the fuel tank.

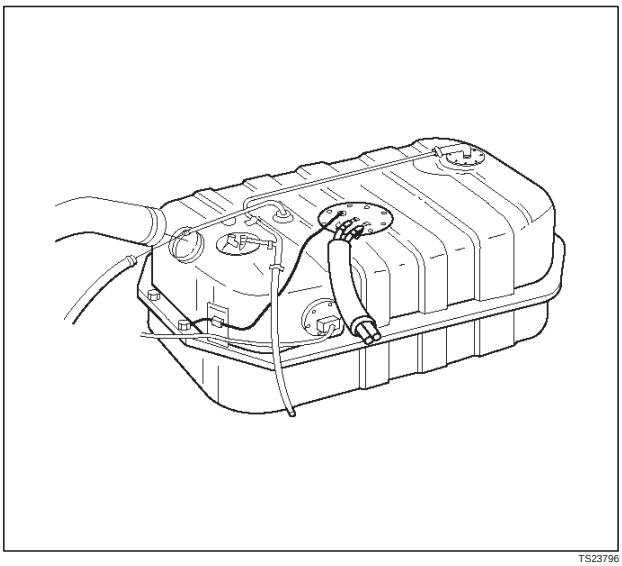

TS23796

7. Remove the undercover retaining bolts.

Downloaded from www.Manualslib.com manuals search engine

8. Remove the undercover.

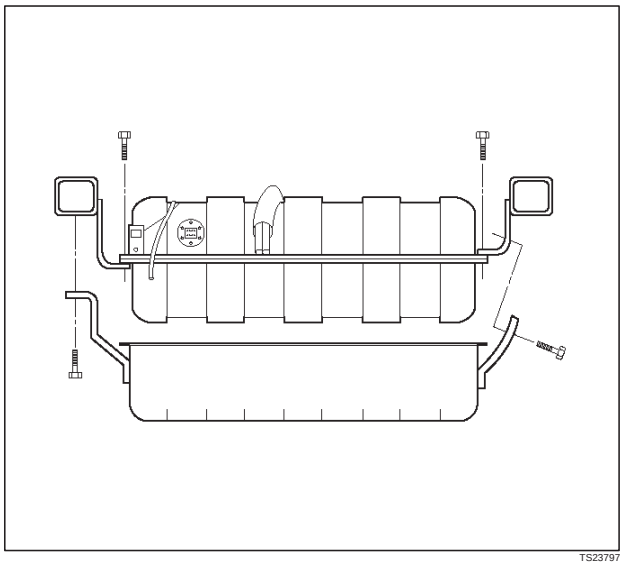

TS23797

9. Disconnect the wiring connector to the fuel pump.
10. Disconnect the wiring connector to the fuel gauge unit.
11. Remove the fuel gauge unit connector from the bracket.
12. Disconnect the EVAP vapor hose.
13. Disconnect the fuel supply hose.
14. Disconnect the fuel return hose.
    - Plug the hoses to prevent dust from entering the hoses.

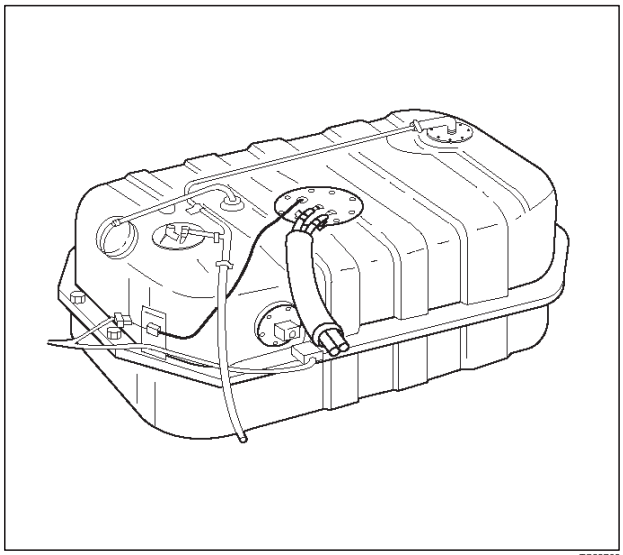

TS23769

15. Remove the fuel tank retaining bolts on both sides.
16. Remove the fuel tank.

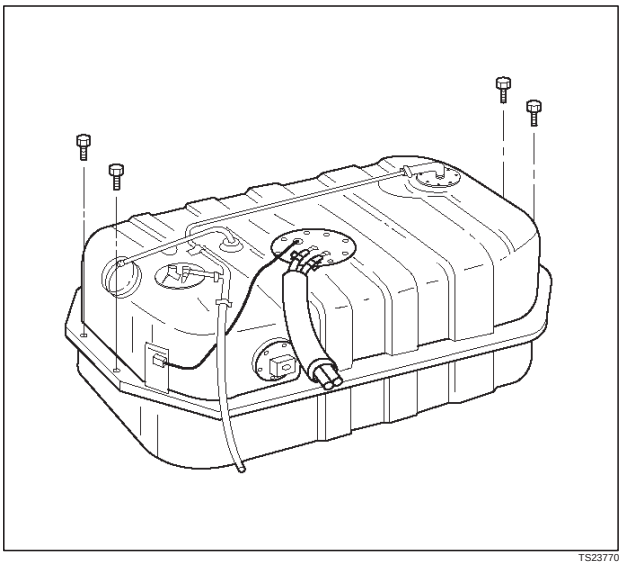

TS23770

Installation Procedure

1. Install the fuel tank.
    - Place the flanges on the left and right side of the tank on the bracket.
2. Install the fuel tank retaining bolts.

Tighten

- **Tighten the fuel tank retaining bolts to 36 N·m (27 lb ft.).**

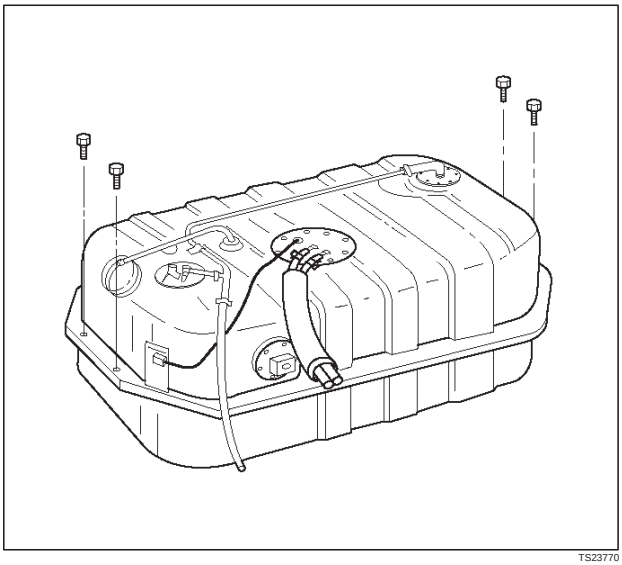

TS23770

3. Connect the fuel return hose.
4. Connect the fuel supply hose.
5. Connect the EVAP vapor hose.
6. Connect the wiring connector for the fuel gauge unit.
7. Connect the fuel gauge wiring connector to the bracket.

Downloaded from www.Manualslib.com manuals search engine

8. Connect the wiring connector for the fuel pump.

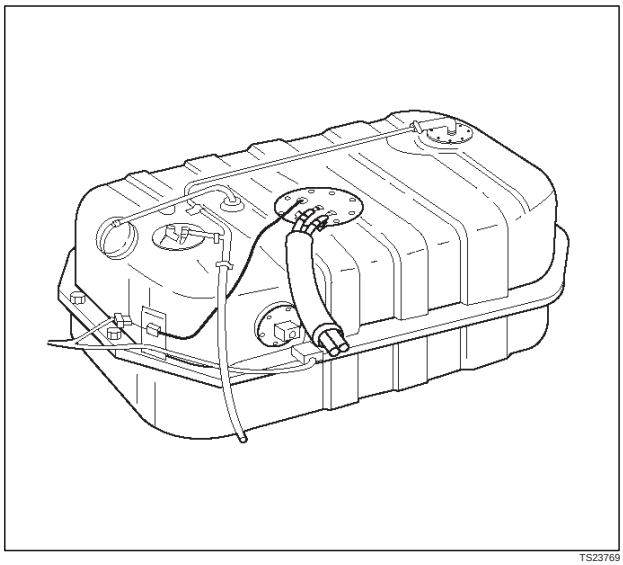

TS23769

9. Install the undercover.
10. Secure the undercover with the retaining bolts.

Torque: 36 N·m (26 lb in)

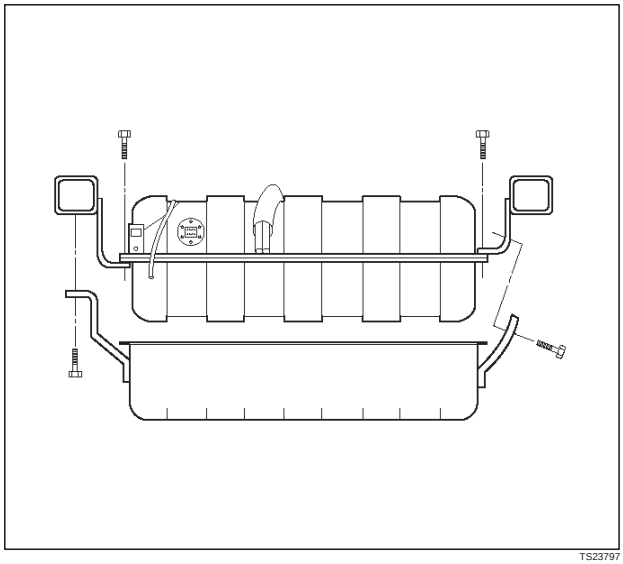

TS23797

11. Connect the fuel filler fuse at the tank.
12. Connect the air breather hose at the tank.

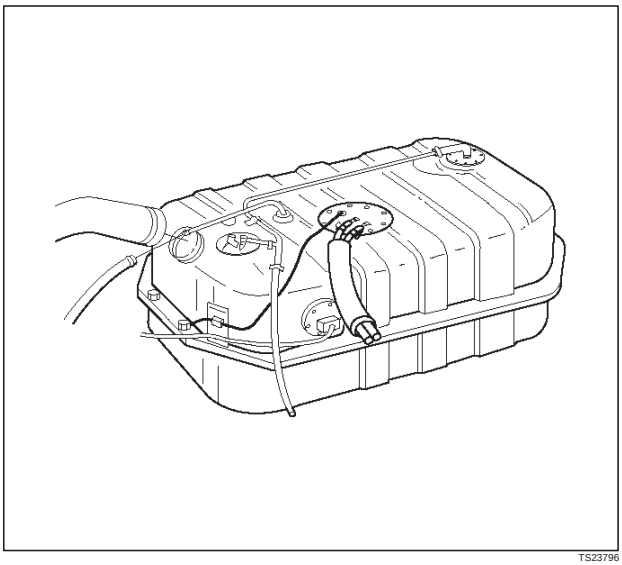

TS23796

13. Fill the fuel tank with fuel.
14. Tighten the fuel filler cap.
15. Connect the negative battery cable.

Throttle Body (TB)

Removal Procedure

1. Disconnect the negative battery cable.
2. Drain the cooling system. Refer to *Cooling System* section.
3. Disconnect the electrical connectors:
   - Throttle position (TP) sensor.
   - Intake air temperature (IAT) sensor. Refer to *Intake Air Temperature Sensor* section.

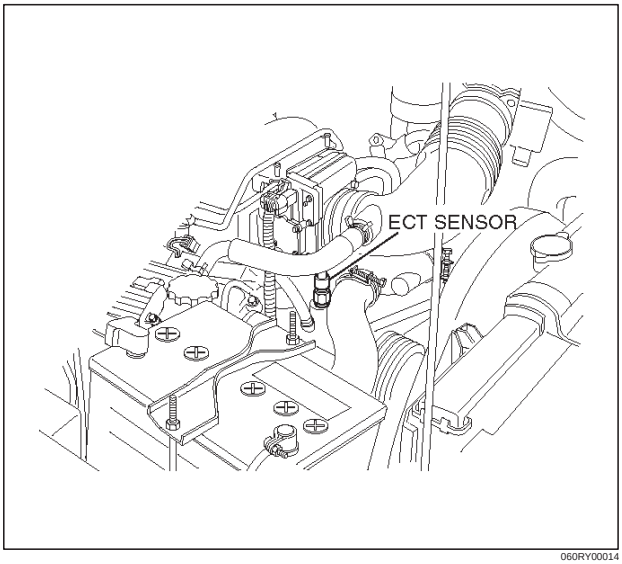

060RY00014

Downloaded from www.Manualslib.com manuals search engine

4. Disconnect the vacuum hose below the air horn.
5. Remove the intake air duct clamp.
6. Disconnect the intake air duct.
7. Disconnect the coolant lines from the throttle body.
8. Remove the bolts from the common chamber.
9. Remove the throttle body from the common chamber.
10. Remove the gasket from the common chamber.

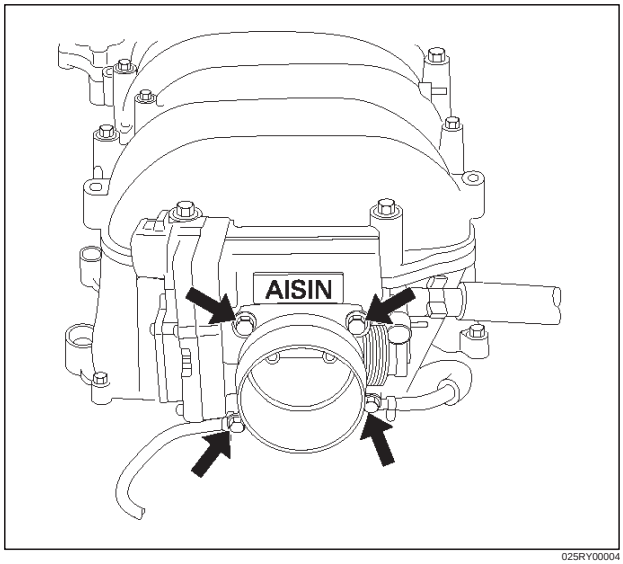

025RY00004

11. Remove the TP sensor. Refer to *Throttle Position (TP) Sensor* section.

Inspection Procedure

NOTE: Do not use solvent of any type when you clean the gasket surfaces on the intake manifold and the throttle body assembly. The gasket surfaces and the throttle body assembly may be damaged as a result.

- If the throttle body gasket needs to be replaced, remove any gasket material that may be stuck to the mating surfaces of the manifold.
- Do not leave any scratches in the aluminum casting.

Installation Procedure

1. Install the TP sensor. Refer to *Throttle Position (TP) Sensor* section.
2. Install the gasket on the common chamber.
3. Install the throttle body on the common chamber.
4. Secure the gasket and the throttle body with the four bolts.
   - The vacuum lines must be properly routed under the throttle body before tightening the mounting bolts.

Tighten

- **Tighten the throttle body mounting bolts to 10 N·m (87 lb in).**

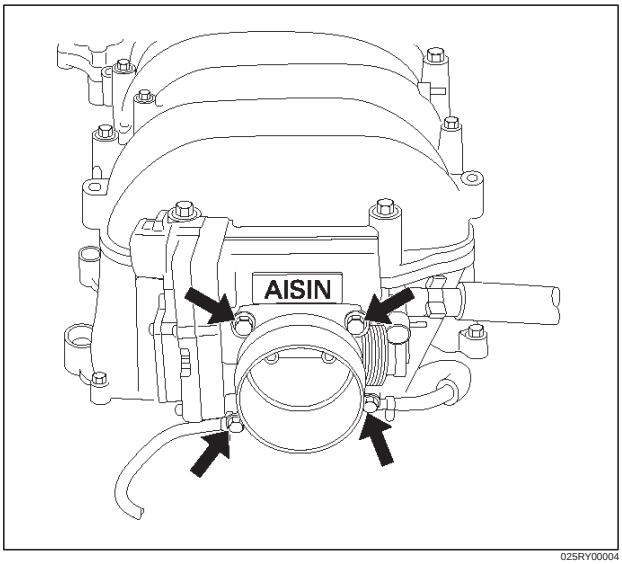

025RY00004

5. Install the coolant lines.
6. Connect all the vacuum lines.
7. Install the intake air duct.
8. Tighten the intake air duct clamp.
9. Connect all the electrical connectors:
   - Throttle position (TP) sensor.
   - Intake air temperature (IAT) sensor. Refer to *Intake Air Temperature Sensor* section.

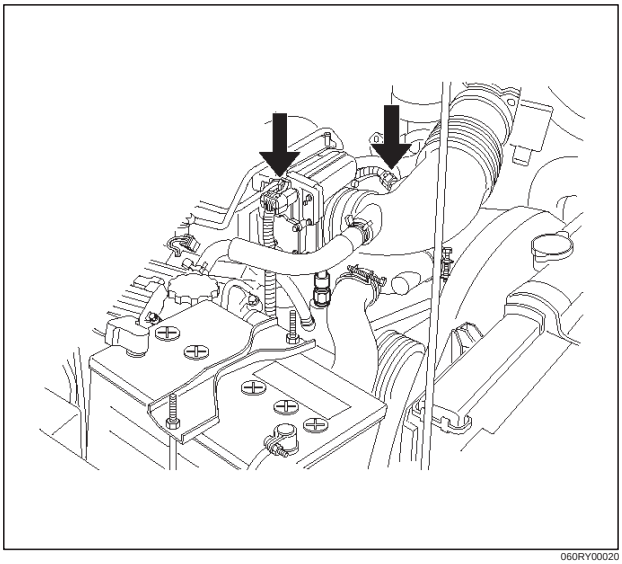

060RY00020

10. Install the accelerator cable assembly. Refer to *Accelerator Cable in Engine Speed Control System* section.
11. Fill the cooling system. Refer to *Cooling System* section.
12. Install the negative battery cable.

Downloaded from www.Manualslib.com manuals search engine

Electronic Ignition System

Removal Procedure

1. Disconnect the negative battery cable.
2. Disconnect the ignition coil connector at the ignition coil assemblies.
3. Remove the two screws that secure the ignition coil assemblies to the rocker cover.

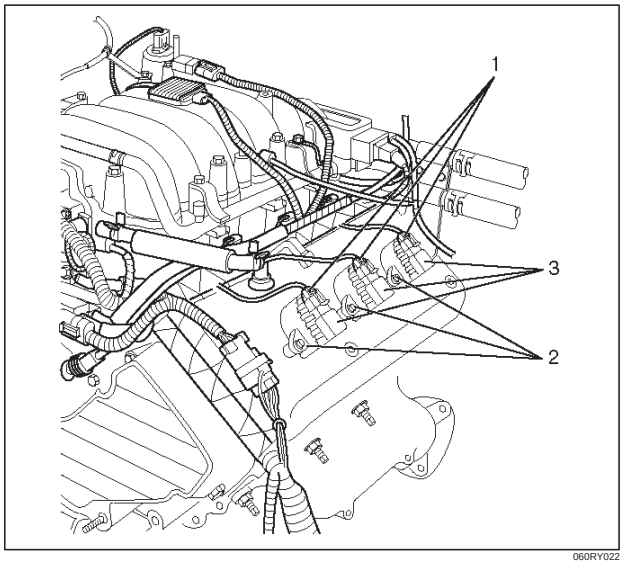

060RY022

Legend

(1) Ignition Coil Connectors
(2) Bolts
(3) Ignition Coil Assemblies

4. Remove the ignition coil assemblies and the spark plug boot from the spark plug.
   - Twist the ignition coil assemblies while pulling it straight up.
5. Use the approhiate spark plug socket in order to remove the spark plug from the engine.

Installation Procedure

NOTE: The plug must thread smoothly into the cylinder head and be fully seated. Use a thread chaser if necessary to clean the threads in the cylinder head. Cross-threading or failure to fully seat the spark plug can cause plug overheating, exhaust blow-by gases, or thread damage. Do not overtighten the spark plugs. Over tightening can cause aluminum threads to strip.

1. Install the spark plug in the engine. Use the appropriate spark plug socket.

   Tighten

   - **Tighten the spark plug to 18 N·m (13 lb ft.).**
2. Install the ignition coil assemblies and spark plug boot over the spark plug.

CAUTION: Ignition coil assembly #6 is different from ignition coil assembly from #1 to #5. Ignition coil assemblies #6 is short type. So, note it when installing ignition coil assembly of #6.

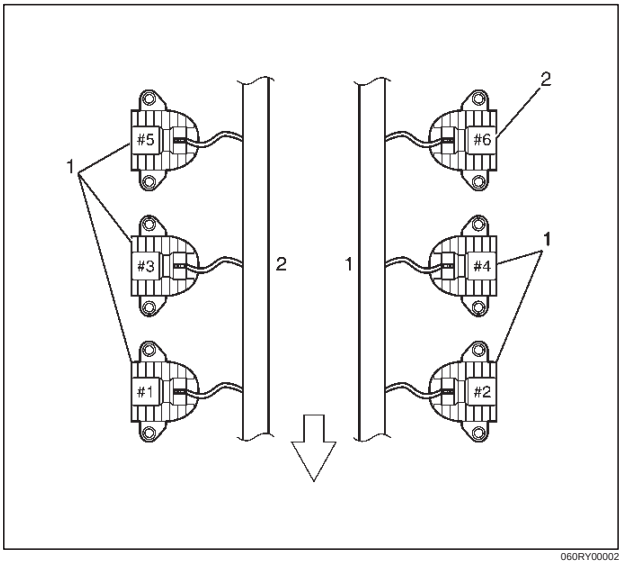

060RY00002

Legend

(1) Long Type Ignition Coil Assemblies (#1 ~ #5)
(2) Short Type Ignition Coil Assembly (#6)

3. Install ignition coil assemblies and tighten the fixing bolts to the specified torque.

   Torque: 4 N·m (35.4 lb in)

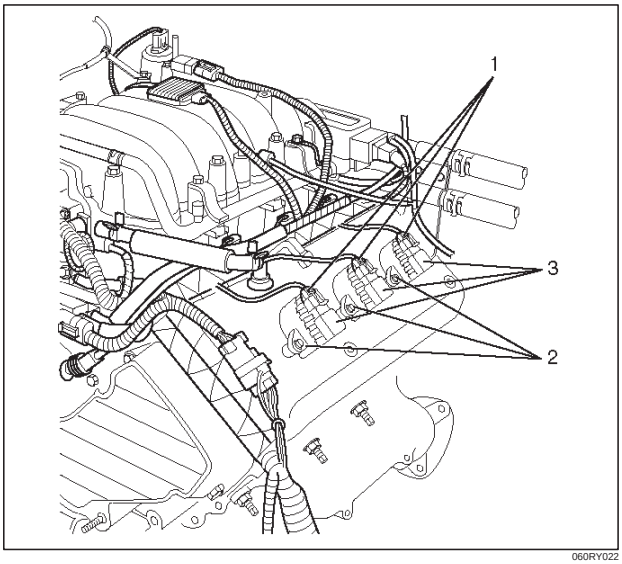

060RY022

Legend

(1) Ignition Coil Connectors
(2) Bolts
(3) Ignition Coil Assemblies

4. Connect the ignition coil connector at the ignition coil assemblies.
5. Connect the negative battery cable.

Downloaded from www.Manualslib.com manuals search engine

Catalytic Converter

Removal and Installation Procedure

Refer to *Engine Exhaust in Engine* section.

Air Conditioning Thermo Relay

Removal Procedure

1. Remove the fuse and relay box cover from under the hood.
2. Consult the diagram on the cover to determine which is the correct relay.
3. Insert a small screwdriver into the catch slot on the forward side of the fuel pump relay.
   - The screwdriver blade will release the catch inside.

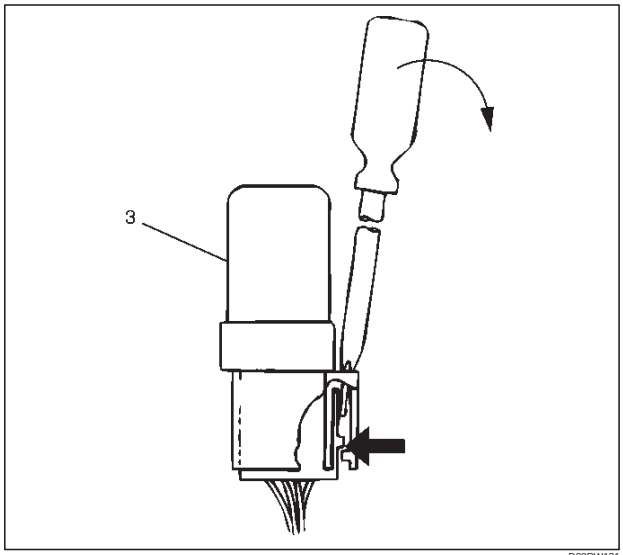

D08RW131

4. Pull the relay straight up and out of the fuse and relay box.

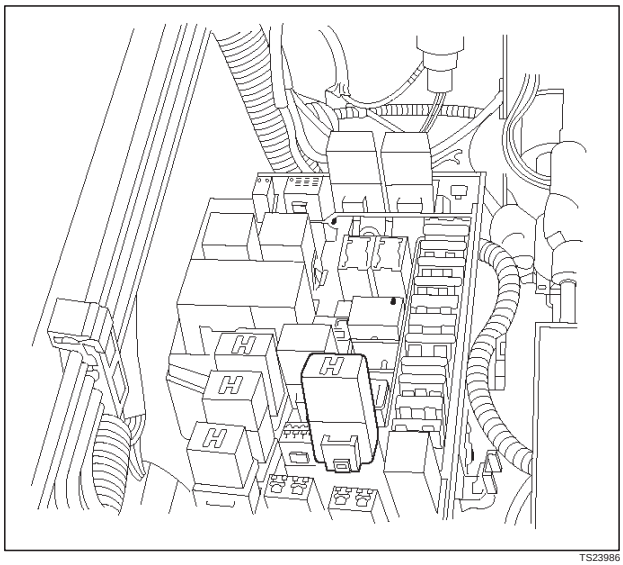

TS23986

Installation Procedure

1. Insert the relay into the correct place in the fuse and relay box with the catch slot facing forward.
2. Press down until the catch engages.
   - An audible “click” will be heard.
3. Install the fuse and relay box cover.

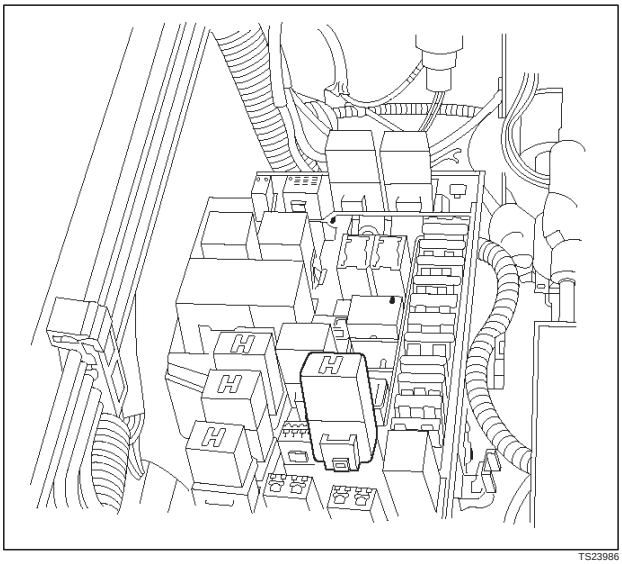

TS23986

EVAP Canister Hoses

Service Information

To view the routing of the EVAP canister hoses, refer to *Vehicle Emission Control Information* in *Diagnosis* section.

Downloaded from www.Manualslib.com manuals search engine

EVAP Canister

Removal Procedure

1. Disconnect the negative battery cable.
2. Disconnect the three hoses from the EVAP canister.

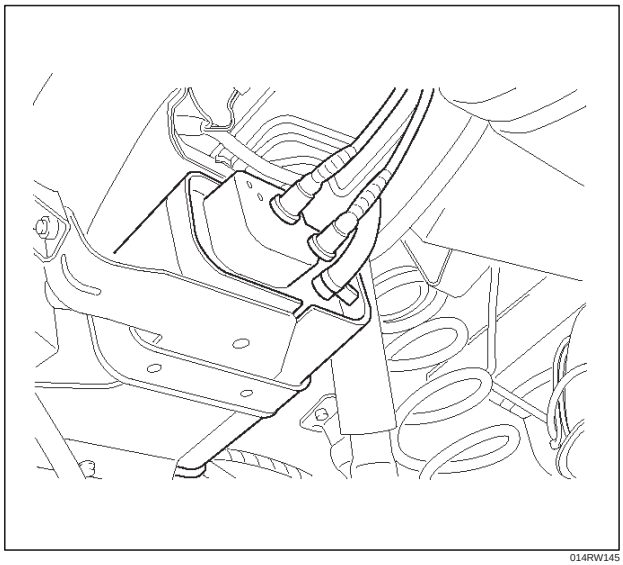

014RW145

3. Disconnect the fuel vapor connector and the purge hose from the EVAP canister vent solenoid.

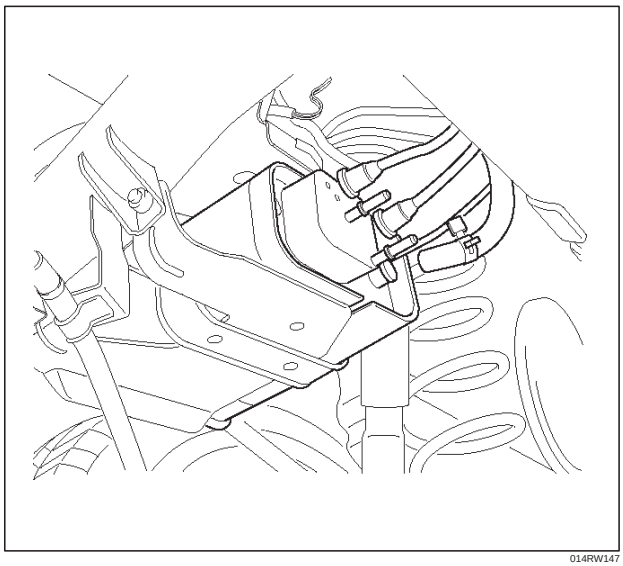

014RW147

4. Remove the retaining two bolts on the mounting bracket and slide the canister out of mounting bracket.

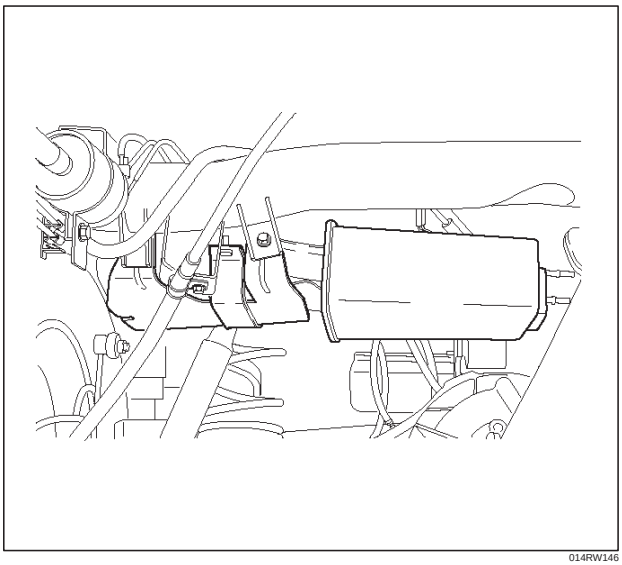

014RW146

Inspection Procedure

1. Inspect the hoses for cracks and leaks.
2. Inspect the canister for a damaged case.

Installation Procedure

1. Slide the canister into mounting bracket and install the mounting bracket two bolts.

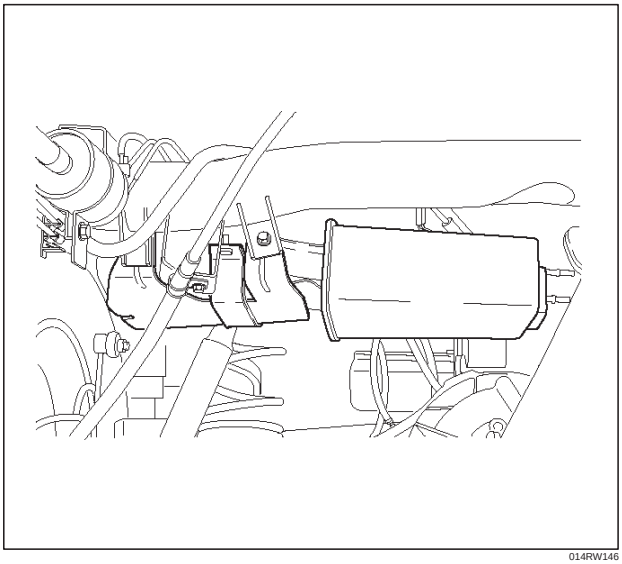

014RW146

Downloaded from www.Manualslib.com manuals search engine

2. Connect the fuel vapor connector to the EVAP canister vent solenoid.
3. Connect the three hoses to the EVAP canister.

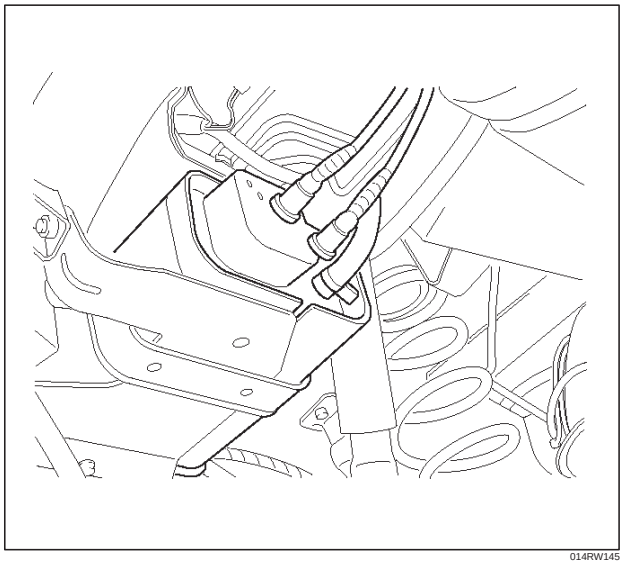

014RW145

4. Disconnect the negative battery cable.

EVAP Canister Vent Solenoid

Removal Procedure

1. Disconnect the negative battery cable.
2. Slide out the EVAP canister vent solenoid from mounting bracket.

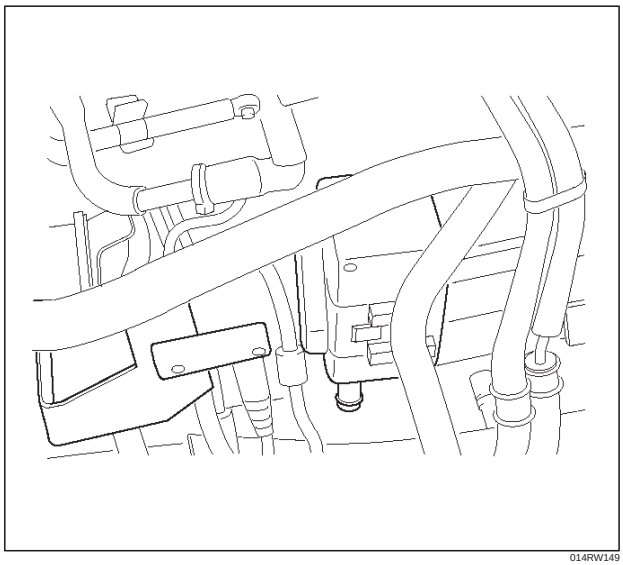

014RW149

3. Disconnect the connector and hose.

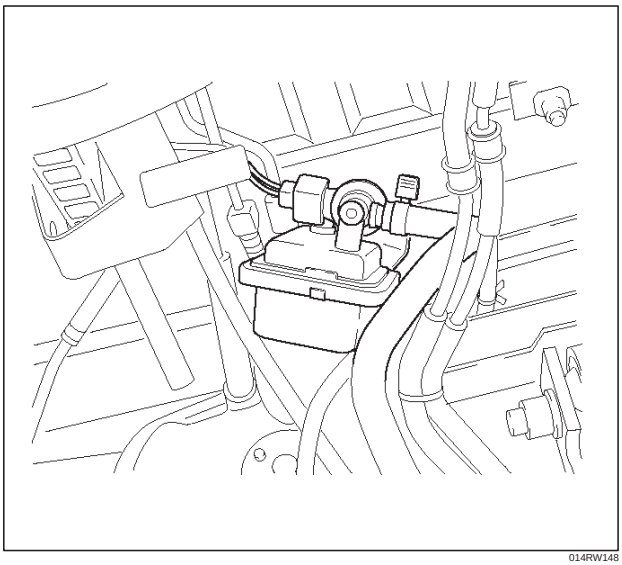

014RW148

Inspection Procedure

1. Check for cracks or leaks.
2. Energize the solenoid and try to blow through it. The solenoid should not allow passage of air when energized. (J 35616 Connector Test Kit can be used to easily attach jumper wires from the battery to the solenoid).

Installation Procedure

1. Connect the connector and hose.

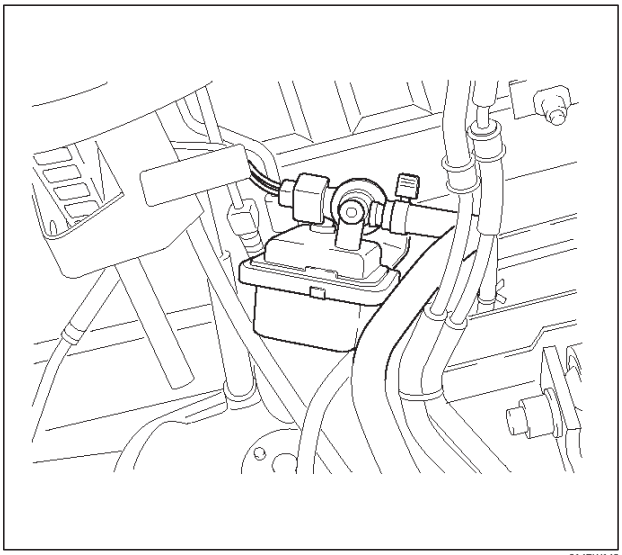

014RW148

Downloaded from www.Manualslib.com manuals search engine

2. Slide the EVAP canister vent solenoid into mounting bracket.

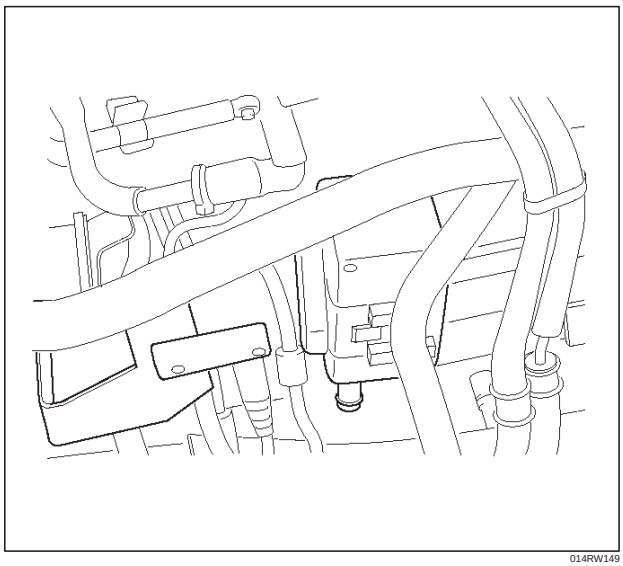

014RW149

3. Connect the negative battery cable.

Fuel Tank Pressure Sensor

Removal Procedure

1. Remove the fuel pump assembly. Refer to *Fuel Tank In Fuel Pump* section.
2. Carefully pry the fuel tank pressure sensor out of the top of the fuel pump assembly.

Inspection Procedure

1. Inspect the vapor pressure sensor for cracks in the housing and corrosion on the electrical terminals.
2. Inspect the rubber grommet for tears and signs of rot.

Installation Procedure

1. Install the rubber grommet on the fuel pump assembly.
2. Install the fuel tank vapor pressure sensor on the fuel pump assembly.
   - Insert the sensor nipple firmly into the grommet.
   - Keep twisting and pushing the sensor until the wide portion of the nipple shows on the other side of the grommet.
3. Install the fuel pump assembly on the fuel tank. Refer to *Fuel Tank In Fuel Pump* section.

EVAP Canister Purge Solenoid

Removal Procedure

1. Disconnect the electrical connector from the EVAP canister purge solenoid.
2. Disconnect the vacuum hoses from the EVAP canister purge solenoid.

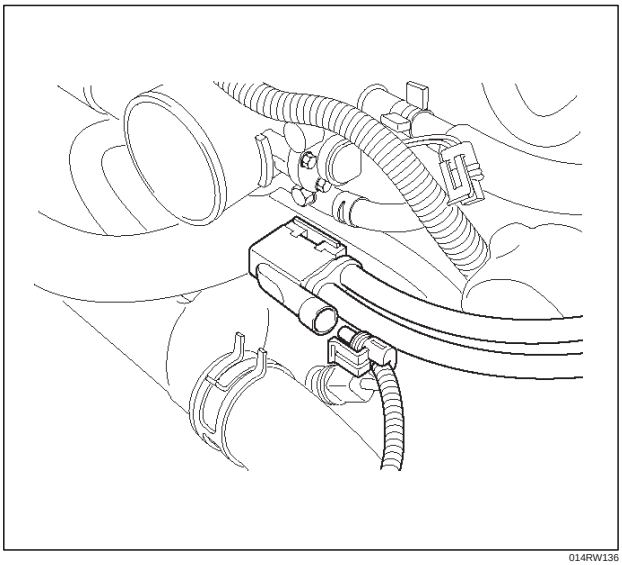

014RW136

3. Remove the EVAP canister purge solenoid retaining bolt from the common chamber.
4. Remove the EVAP canister purge solenoid.

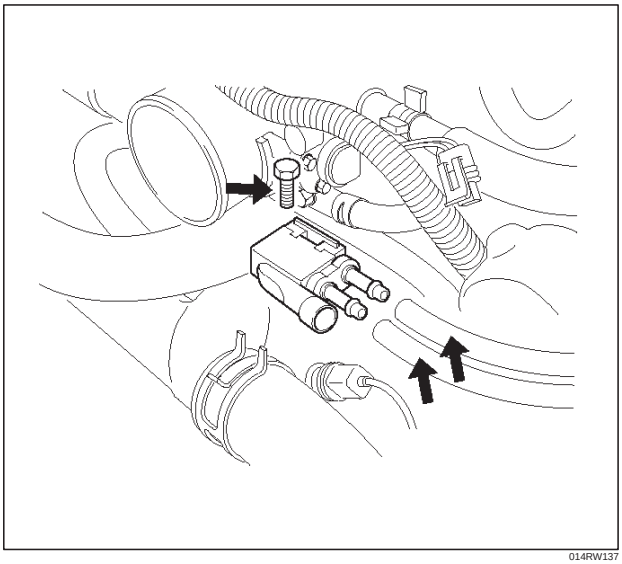

014RW137

Downloaded from www.Manualslib.com manuals search engine

Installation Procedure

1. Install the EVAP canister purge solenoid on the upper intake manifold.
2. Install the EVAP canister purge solenoid retaining bolt.

Tighten

- **Tighten the bolts to 20 N·m (16 lb ft.).**

3. Connect the vacuum hoses to the EVAP canister purge solenoid.

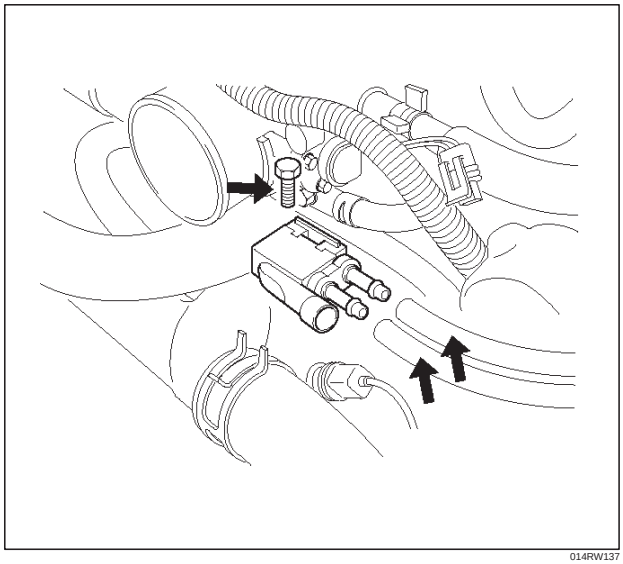

014RW137

4. Connect the electrical connector to the EVAP canister purge solenoid.

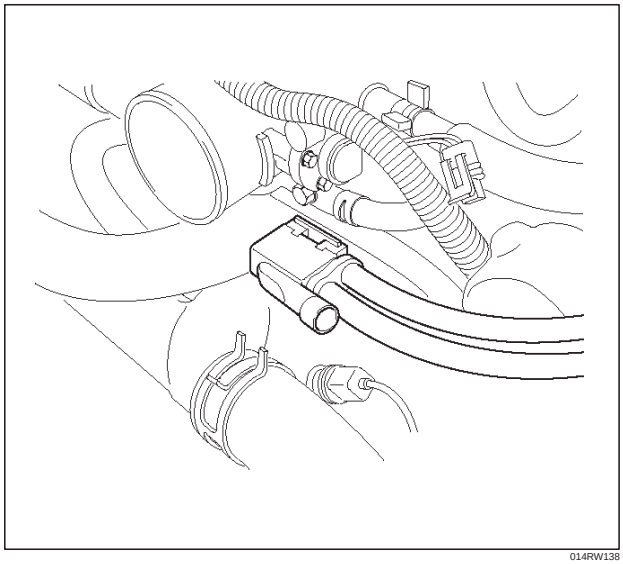

014RW138

Fuel Tank Vent Valve

Removal and Installation Procedure

Refer to *Fuel Pump* section.

Linear Exhaust Gas Recirculation (EGR) Valve

Removal Procedure

1. Disconnect the negative battery cable.
2. Disconnect the electrical connector at the EGR valve.

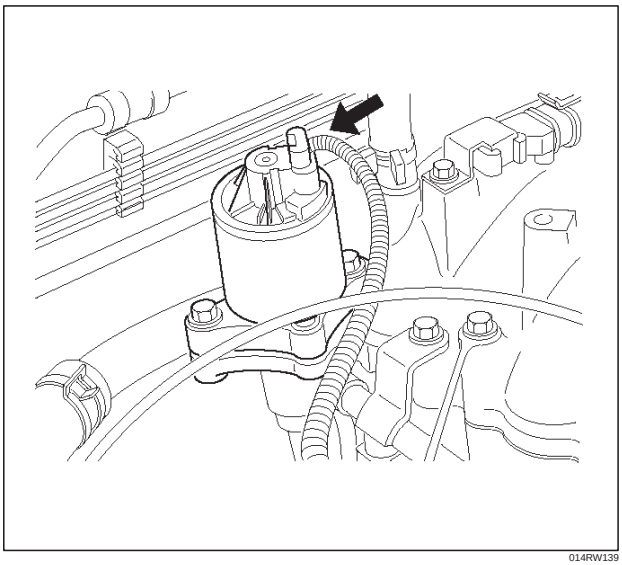

014RW139

3. Remove the bolts from the common chamber.

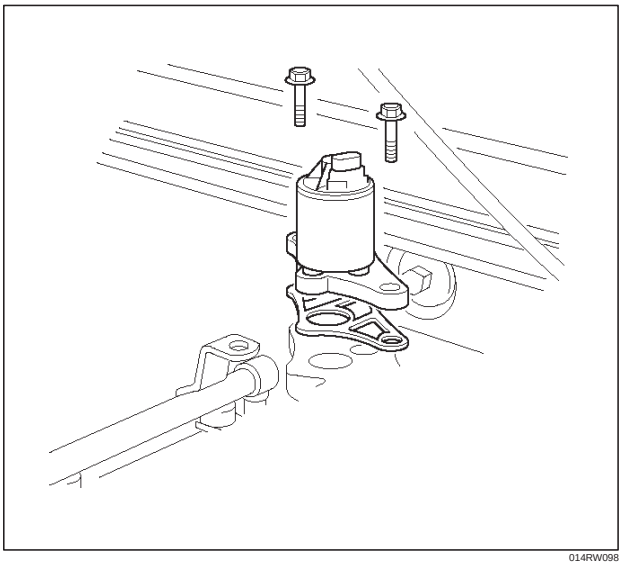

014RW098

4. Remove the EGR valve from the common chamber manifold.
5. Remove the gasket from the common chamber manifold.

Downloaded from www.Manualslib.com manuals search engine

Installation Procedure

1. Install the gasket on the common chamber.
2. Install the EGR valve on the common chamber.
3. Secure the EGR valve and the gasket with the bolts.

   Torque: 25 N·m (18 lb ft)

NOTE: It is possible to install the EGR valve rotated 180˚ from the correct position. Make sure that the base of the valve is placed so that it aligns with the mounting flange.

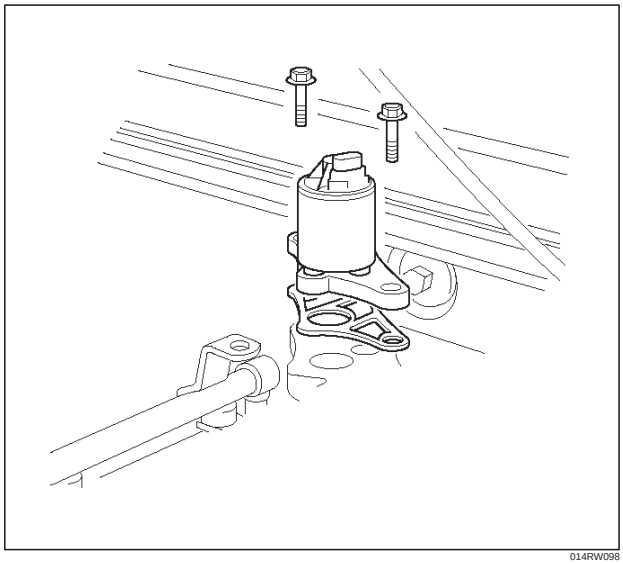

014RW098

4. Connect the electrical connector at the EGR valve.

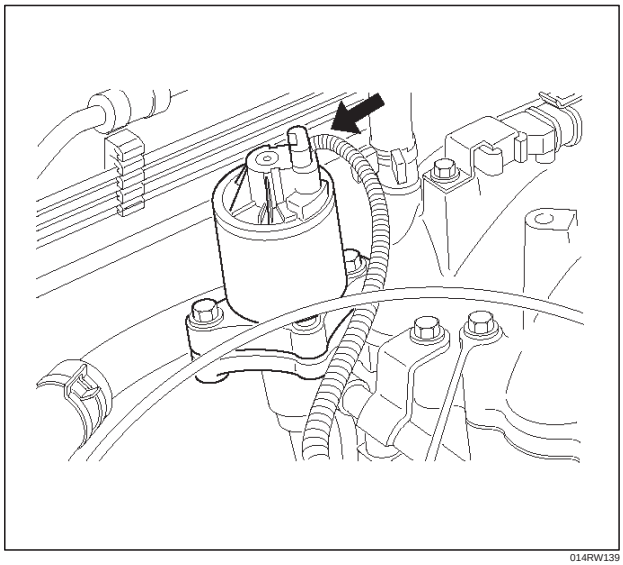

014RW139

5. Connect the negative battery cable.

Positive Crankcase Ventilation (PCV) Valve

Removal Procedure

1. Remove the vacuum hose at the PCV valve.
   - Slide the clamp back to release the hose.
2. Pull the PCV valve from the rubber grommet in the right valve cover.

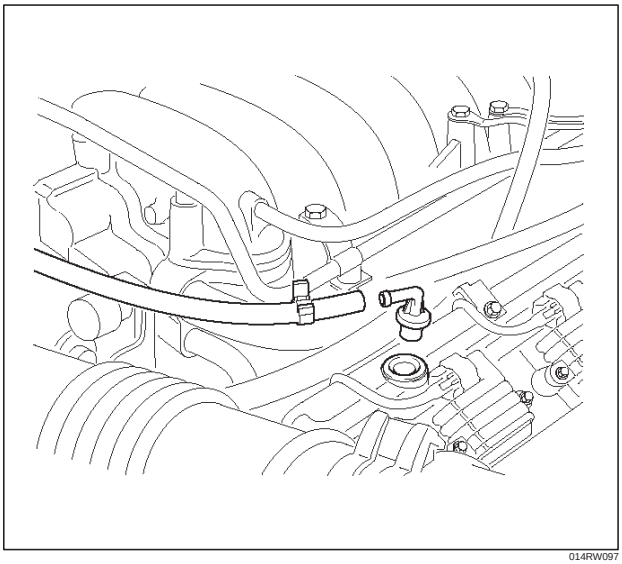

014RW097

Inspection Procedure

Before inspecting the PCV valve, make sure that the hoses are connected properly and are in good condition. Also check that the oil pan and rocker cover gaskets are sealing properly.

PCV Valve

1. Run the engine at normal operating temperature.
2. Disconnect the valve from the rocker cover.

   RESULT: A hissing noise should be heard from the valve. If no noise is heard, the PCV valve or hose is plugged.
3. Remove the PCV valve from the engine.

   a. Blow air into the rocker cover side of the valve.

   RESULT: Air should pass freely.

   b. Blow air into the air cleaner side of the valve.

   RESULT: Air should not pass through the valve.
4. Re-install the PCV valve and remove the oil filler cap.

RESULT: A small vacuum should be felt at the oil filler hole.

Downloaded from www.Manualslib.com manuals search engine

Installation Procedure

1. Push the PCV valve into the rubber grommet in the left valve cover.
2. Install the vacuum hose on the PCV valve and secure the vacuum hose with the clamp.

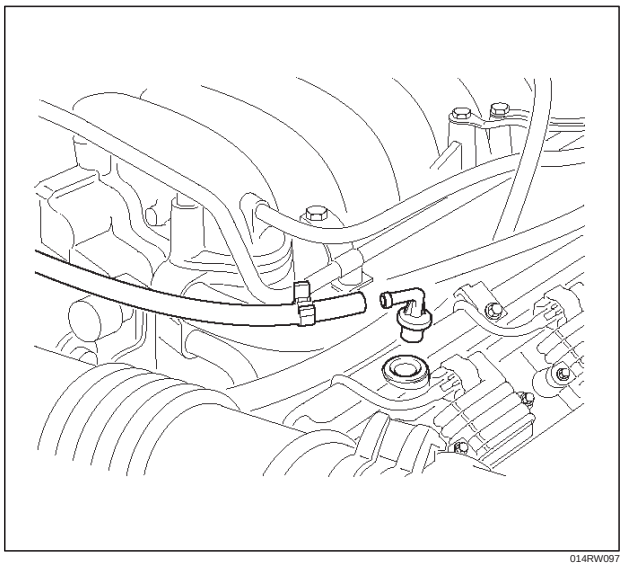

014RW097

Wiring and Connectors

Wiring Harness Service

The control module harness electrically connects the control module to the various solenoids, switches and sensors in the vehicle engine compartment and passenger compartment.

Replace wire harnesses with the proper part number replacement.

Because of the low amperage and voltage levels utilized in powertrain control systems, it is essential that all wiring in environmentally exposed areas be repaired with crimp and seal splice sleeves.

The following wire harness repair information is intended as a general guideline only. Refer to *Chassis Electrical* section for all wire harness repair procedures.

Connectors and Terminals

Use care when probing a connector and when replacing terminals. It is possible to short between opposite terminals. Damage to components could result. Always use jumper wires between connectors for circuit checking. NEVER probe through Weather-Pack seals. Use an appropriate connector test adapter kit which contains an assortment of flexible connectors used to probe terminals during diagnosis. Use an appropriate fuse remover and test tool for removing a fuse and to adapt the fuse holder to a meter for diagnosis.

Open circuits are often difficult to locate by sight because oxidation or terminal misalignment are hidden by the connectors. Merely wiggling a connector on a sensor, or in the wiring harness, may temporarily correct the open circuit. Intermittent problems may also be caused by oxidized or loose connections.

Be certain of the type of connector/terminal before making any connector or terminal repair. Weather-Pack and Com-Pack III terminals look similar, but are serviced differently.

PCM Connectors and Terminals

Removal Procedure

1. Remove the connector terminal retainer.
2. Push the wire connected to the affected terminal through the connector face so that the terminal is exposed.
3. Service the terminal as necessary.

Installation Procedure

1. Bend the tab on the connector to allow the terminal to be pulled into position within the connector.
2. Pull carefully on the wire to install the connector terminal retainer.

Wire Harness Repair: Twisted Shielded Cable

Removal Procedure

1. Remove the outer jacket.
2. Unwrap the aluminum/mylar tape. Do not remove the mylar.

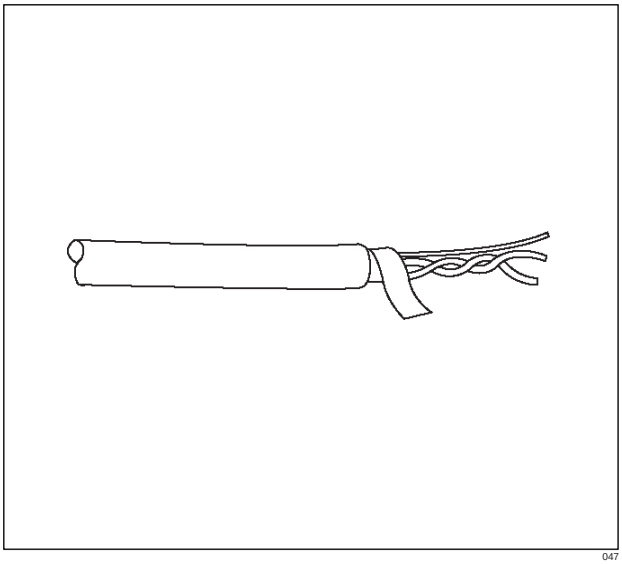

047

3. Untwist the conductors.

Downloaded from www.Manualslib.com manuals search engine

4. Strip the insulation as necessary.

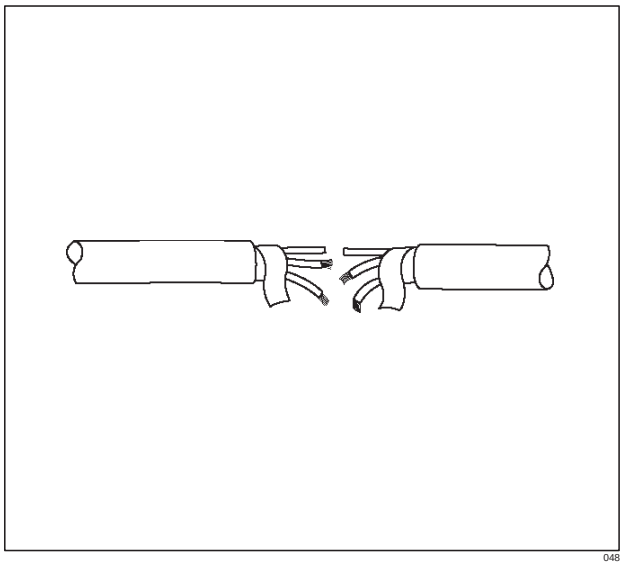

048

Installation Procedure

1. Splice the wires using splice clips and rosin core solder.
2. Wrap each splice to insulate.
3. Wrap the splice with mylar and with the drain (uninsulated) wire.

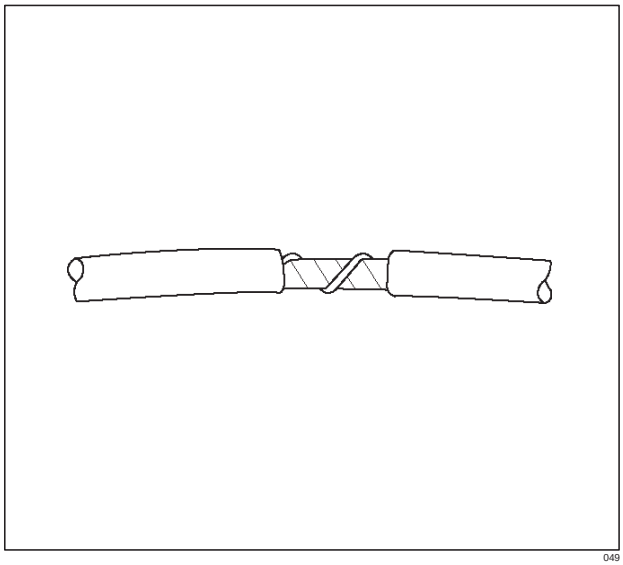

049

4. Tape over the whole bundle to secure.

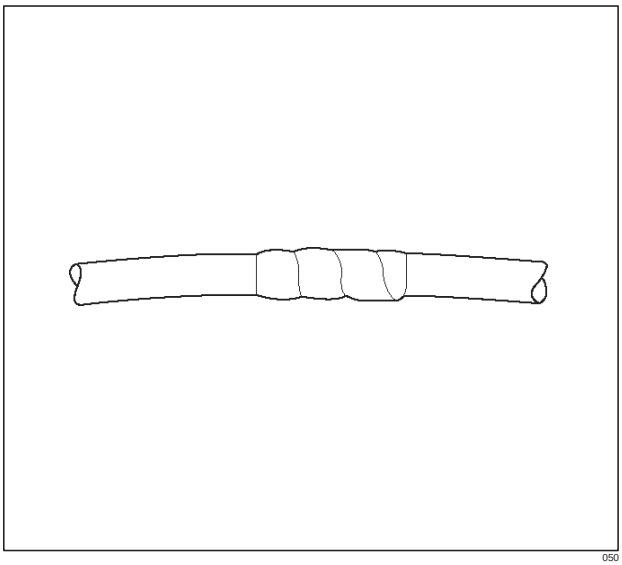

050

Twisted Leads

Removal Procedure

1. Locate the damaged wire.
2. Remove the insulation as required.

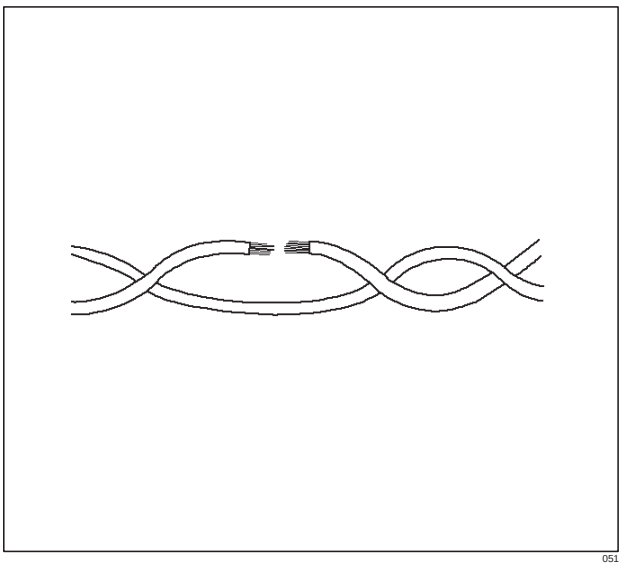

051

Downloaded from www.Manualslib.com manuals search engine

Installation Procedure

1. Use splice clips and rosin core solder in order to splice the two wires together.

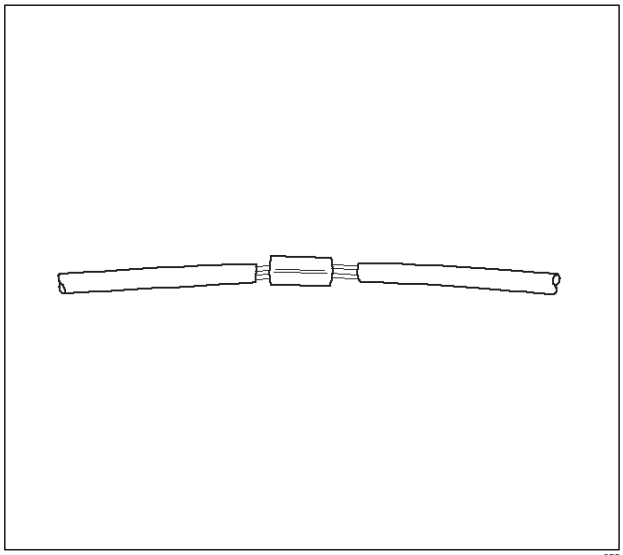

052

2. Cover the splice with tape in order to insulate it from the other wires.

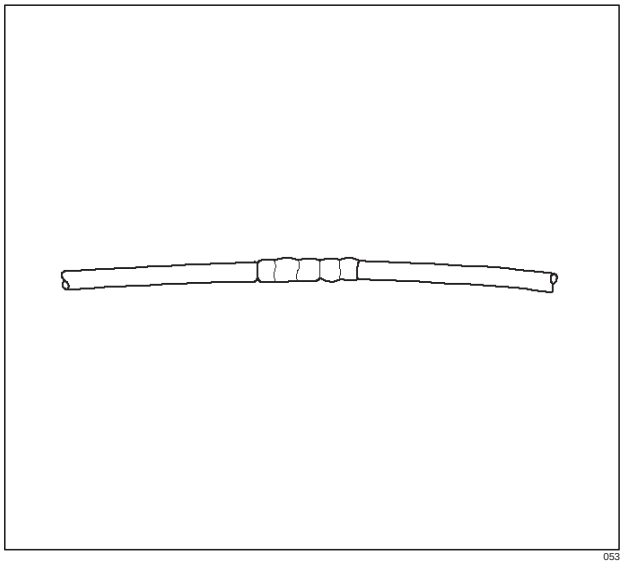

053

3. Twist the wires as they were before starting this procedure.

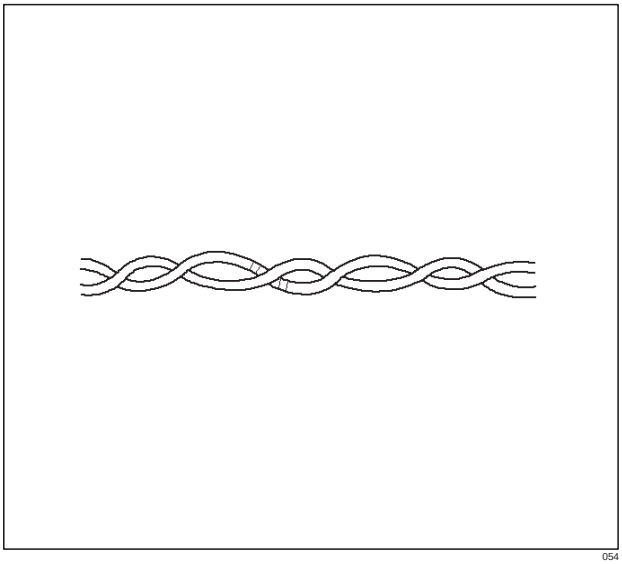

054

4. Tape the wires with electrical tape. Hold in place.

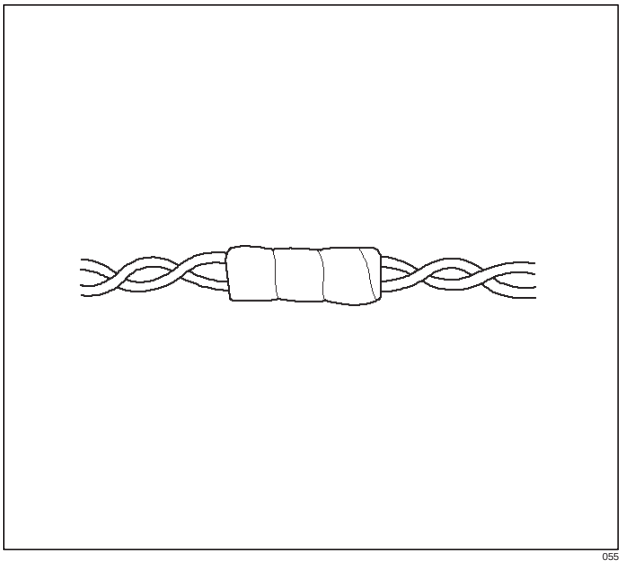

055

Downloaded from www.Manualslib.com manuals search engine

Weather-Pack Connector

Tools Required

J 28742-A Weather-Pack II Terminal Remover

Removal Procedure

A Weather-Pack connector can be identified by a rubber seal at the rear of the connector. This engine room connector protects against moisture and dirt, which could from oxidation and deposits on the terminals. This protection is important, because of the low voltage and the low amperage found in the electronic systems.

1. Open the secondary lock hinge on the connector.

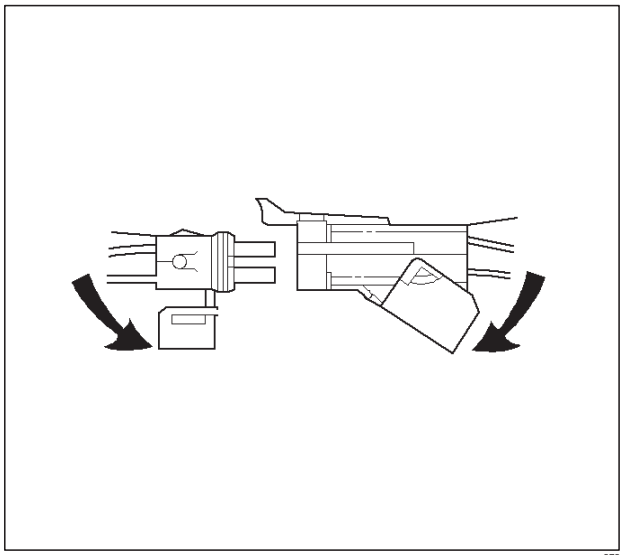

070

2. Use tool J 28742-A or the equivalent to remove the pin and the sleeve terminals. Push on J 28742-A to release.

NOTE: Do the use an ordinary pick or the terminal may be bent or deformed. Unlike standard blade terminals, these terminals cannot be straightened after they have been improperly bent.

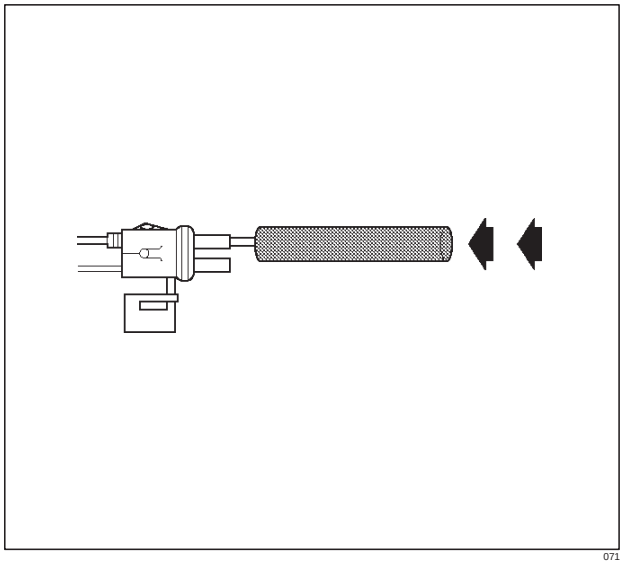

071

3. Cut the wire immediately behind the cable seal.

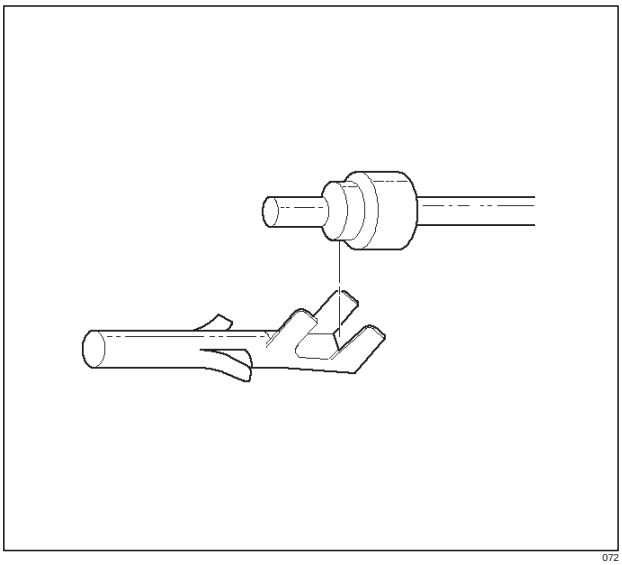

072

Installation Procedure

Make certain the connectors are properly seated and all of the sealing rings are in place when you reconnect the leads. The secondary lock hinge provides a backup locking feature for the connector. The secondary lock hinge is used for added reliability. This flap should retain the terminals even if the small terminal lock tangs are not positioned properly.

Do not replace the Weather-Pack connections with standard connections. Read the instructions provided with the Weather-Pack connector and terminal packages.

1. Replace the terminal.
2. Slip the new seal onto the wire.
3. Strip 5 mm (0.2”) of insulation from the wire.
4. Crimp the terminal over the wire and the seal.

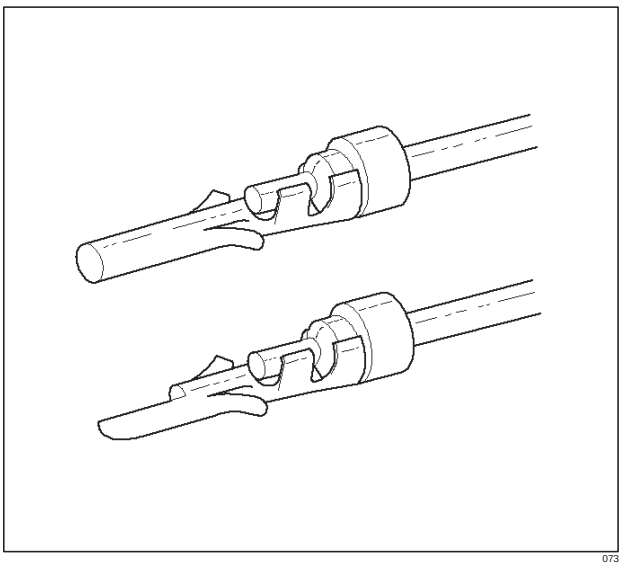

073

Downloaded from www.Manualslib.com manuals search engine

5. Push the terminal and the connector to engage the locking tangs.

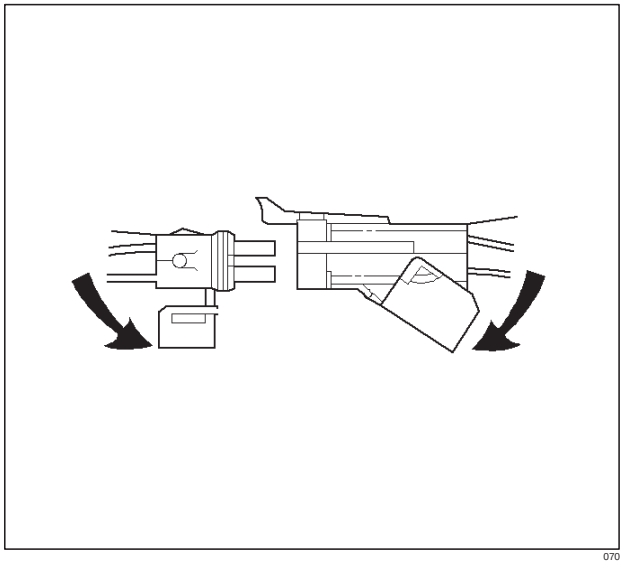

6. Close the secondary locking hinge.

Com-Pack III

General Information

The Com-Pack III terminal looks similar to some Weather-Pack terminals. This terminal is not sealed and is used where resistance to the environment is not required. Use the standard method when repairing a terminal. Do not use the Weather-Pack terminal tool J 28742-A or equivalent. These will damage the terminals.

Metri-Pack

Tools Required

J 35689 Terminal Remover

Removal Procedure

Some connectors use terminals called Metri-Pack Series 150. These may be used at the engine coolant temperature (ECT) sensor.

1. Slide the seal (1) back on the wire.
2. Insert the J 35689 tool or equivalent (3) in order to release the terminal locking tang (2).

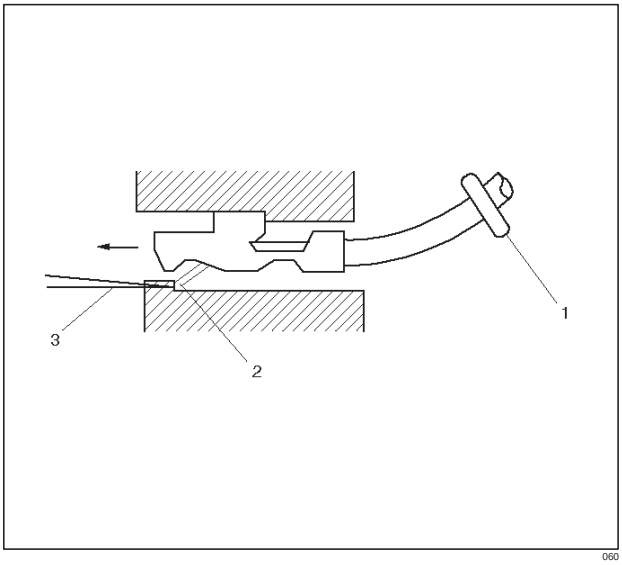

3. Push the wire and the terminal out through the connector. If you reuse the terminal, reshape the locking tang.

Installation Procedure

Metri-Pack terminals are also referred to as “pull-to-seat” terminals.

1. In order to install a terminal on a wire, the wire must be inserted through the seal (2) and through the connector (3).
2. The terminal (1) is then crimped onto the wire.

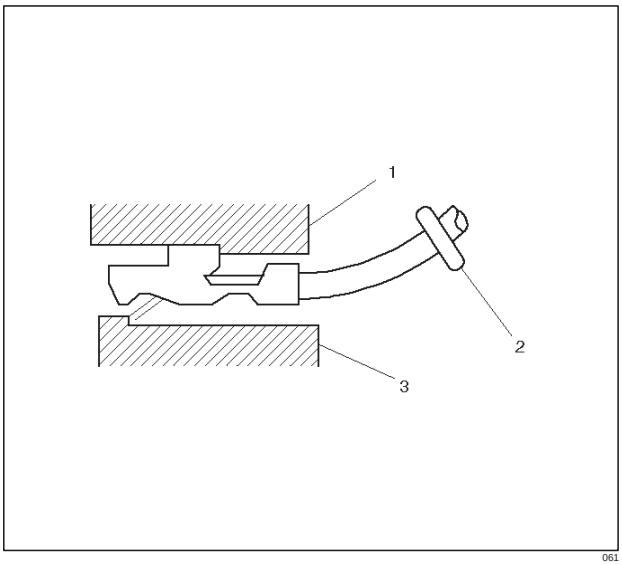

3. Then the terminal is pulled back into the connector to seat it in place.

Downloaded from www.Manualslib.com manuals search engine

General Description (PCM and Sensors)

58X Reference PCM Input

The powertrain control module (PCM) uses this signal from the crankshaft position (CKP) sensor to calculate engine RPM and crankshaft position at all engine speeds. The PCM also uses the pulses on this circuit to initiate injector pulses. If the PCM receives no pulses on this circuit, DTC P0337 will set. The engine will not start and run without using the 58X reference signal.

A/C Request Signal

This signal tells the PCM when the A/C mode is selected at the A/C control head. The PCM uses this to adjust the idle speed before turning “ON” the A/C clutch. The A/C compressor will be inoperative if this signal is not available to the PCM.
Refer to *A/C Clutch Circuit Diagnosis* section for A/C wiring diagrams and diagnosis for the A/C electrical system.

Crankshaft Position (CKP) Sensor

The crankshaft position (CKP) sensor provides a signal used by the powertrain control module (PCM) to calculate the ignition sequence. The CKP sensor initiates the 58X reference pulses which the PCM uses to calculate RPM and crankshaft position.
Refer to *Electronic Ignition System* section for additional information.

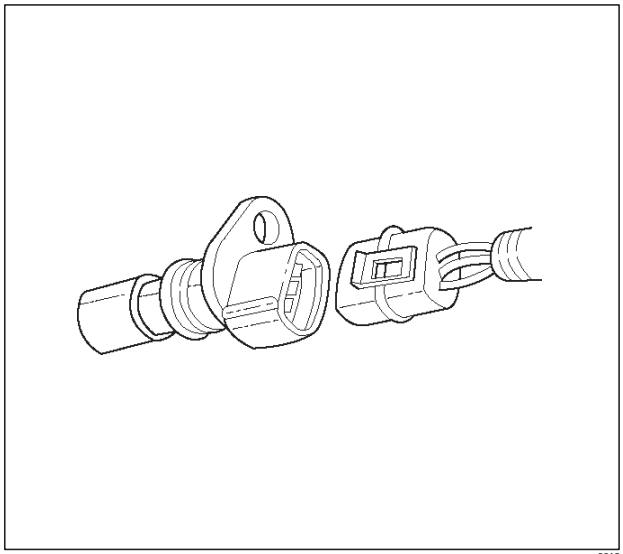

0013

Camshaft Position (CMP) Sensor and Signal

The camshaft position (CMP) sensor sends a CMP signal to the PCM. The PCM uses this signal as a “sync pulse” to trigger the injectors in the proper sequence. The PCM uses the CMP signal to indicate the position of the #1 piston during its power stroke. This allows the PCM to calculate true sequential fuel injection (SFI) mode of operation. If the PCM detects an incorrect CMP signal while the engine is running, DTC P0341 will set. If the CMP signal is lost while the engine is running, the fuel injection system will shift to a calculated sequential fuel injection mode based on the last fuel injection pulse, and the engine will continue to run. As long as the fault is present, the engine can be restarted. It will run in the calculated sequential mode with a 1-in-6 chance of the injector sequence being correct.
Refer to *DTC P0341* for further information.

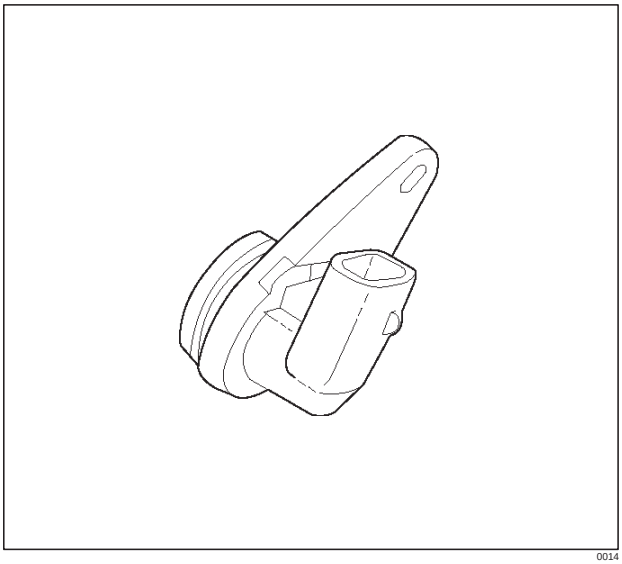

0014

Engine Coolant Temperature (ECT) Sensor

The engine coolant temperature (ECT) sensor is a thermistor (a resistor which changes value based on temperature) mounted in the engine coolant stream. Low coolant temperature produces a high resistance of 100,000 ohms at –40˚C (–40˚F). High temperature causes a low resistance of 70 ohms at 130˚C (266˚F). The PCM supplies a 5-volt signal to the ECT sensor through resistors in the PCM and measures the voltage. The signal voltage will be high when the engine is cold and low when the engine is hot. By measuring the voltage, the PCM calculates the engine coolant temperature. Engine coolant temperature affects most of the systems that the PCM controls.
The Tech 2 displays engine coolant temperature in degrees. After engine start-up, the temperature should rise steadily to about 85˚C (185˚F). It then stabilizes when the thermostat opens. If the engine has not been run for several hours (overnight), the engine coolant temperature and intake air temperature displays should be close to each other. A hard fault in the engine coolant sensor circuit will set DTC P0177 or DTC P0118. An intermittent fault will set a DTC P1114 or P1115.

Downloaded from www.Manualslib.com manuals search engine

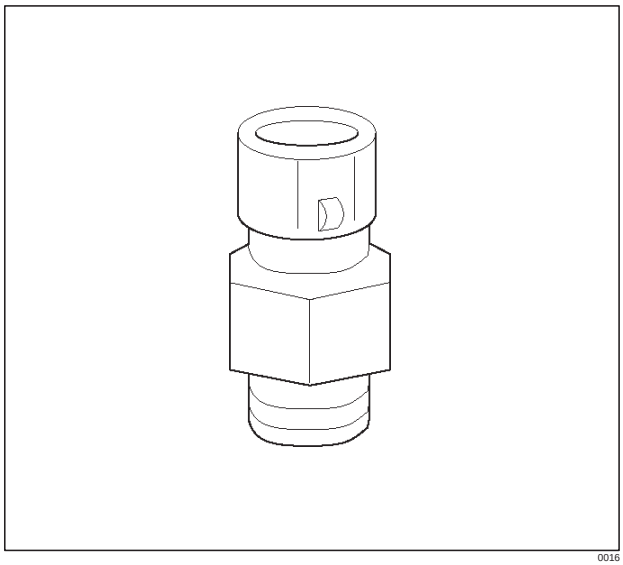

0016

Electrically Erasable Programmable Read Only Memory (EEPROM)

The electrically erasable programmable read only memory (EEPROM) is a permanent memory chip that is physically soldered within the PCM. The EEPROM contains the program and the calibration information that the PCM needs to control powertrain operation.

Unlike the PROM used in past applications, the EEPROM is not replaceable. If the PCM is replaced, the new PCM will need to be programmed. Equipment containing the correct program and calibration for the vehicle is required to program the PCM.

Fuel Control Heated Oxygen Sensors

The fuel control heated oxygen sensors (Bank 1 HO2S 1 and Bank 2 HO2S 1) are mounted in the exhaust stream where they can monitor the oxygen content of the exhaust gas. The oxygen present in the exhaust gas reacts with the sensor to produce a voltage output. This voltage should constantly fluctuate from approximately 100 mV to 900 mV. The heated oxygen sensor voltage can be monitored with a Tech 2. By monitoring the voltage output of the oxygen sensor, the PCM calculates the pulse width command for the injectors to produce the proper combustion chamber mixture.

- Low HO2S voltage is a lean mixture which will result in a rich command to compensate.
- High HO2S voltage is a rich mixture which will result in a lean command to compensate.

An open Bank 1 HO2S 1 signal circuit will set a DTC P0134 and the Tech 2 will display a constant voltage between 400-500 mV. A constant voltage below 300 mV in the sensor circuit (circuit grounded) will set DTC P0131. A constant voltage above 800 mV in the circuit will set DTC P0132. Faults in the Bank 2 HO2S 1 signal circuit will cause DTC 0154 (open circuit), DTC P0151 (grounded circuit), or DTC P0152 (signal voltage high) to set. A fault in the Bank 1 HO2S 1 heater circuit will cause DTC P0135 to set. A fault in the Bank 2 HO2S 1 heater circuit will cause DTC P0155 to set. The PCM can also detect HO2S response problems. If the response time of an HO2S is determined to be too slow, the PCM will store a DTC that indicates degraded HO2S performance.

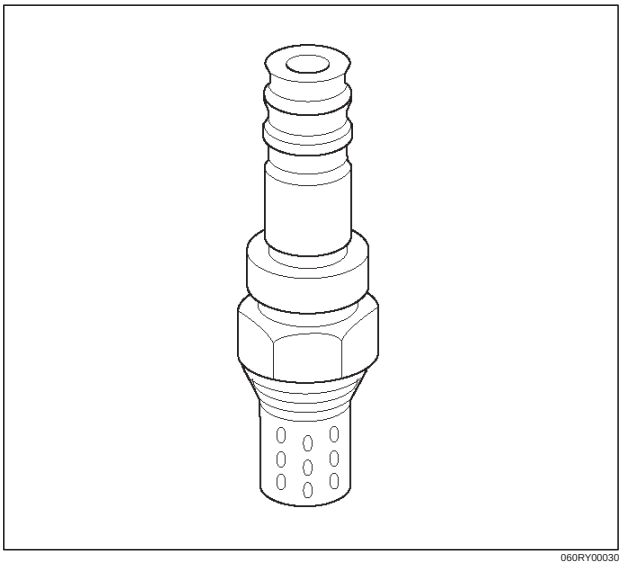

060RY00030

Catalyst Monitor Heated Oxygen Sensors

Three-way catalytic converters are used to control emissions of hydrocarbons (HC), carbon monoxide (CO), and oxides of nitrogen (NOx). The catalyst within the converters promotes a chemical reaction. This reaction oxidizes the HC and CO present in the exhaust gas and converts them into harmless water vapor and carbon dioxide. The catalyst also reduces NOx by converting it to nitrogen. The PCM can monitor this process using the Bank 1 HO2S 2 and the Bank 2 HO2S 2 heated oxygen sensors. The Bank 1 HO2S 1 and the Bank 2 HO2S 1 sensors produce an output signal which indicates the amount of oxygen present in the exhaust gas entering the three-way catalytic converter. The Bank 1 HO2S 2 and the Bank 2 HO2S 2 sensors produce an output signal which indicates the oxygen storage capacity of the catalyst. This indicates the catalyst's ability to efficiently convert exhaust gases. If the catalyst is operating efficiently, the Bank 1 HO2S 1 and the Bank 2 HO2S 1 signals will be more active than the signals produced by the Bank 1 HO2S 2 and the Bank 2 HO2S 2 sensors.

The catalyst monitor sensors operate the same as the fuel control sensors. The Bank 1 HO2S 2 and the Bank 2 HO2S 2 sensors' main function is catalyst monitoring, but they also have a limited role in fuel control. If a sensor output indicates a voltage either above or below the 450 mV bias voltage for an extended period of time, the PCM will make a slight adjustment to fuel trim to ensure that fuel delivery is correct for catalyst monitoring.

A problem with the Bank 1 HO2S 2 signal circuit will set DTC P0137, P0138, or P0140, depending on the specific condition. A problem with the Bank 2 HO2S 2 signal circuit will set DTC P0157, P0158, or P0160, depending on the specific condition. A fault in the heated oxygen sensor heater element or its ignition feed or ground will result in lower sensor response. This may cause incorrect catalyst monitor diagnostic results.

Downloaded from www.Manualslib.com manuals search engine

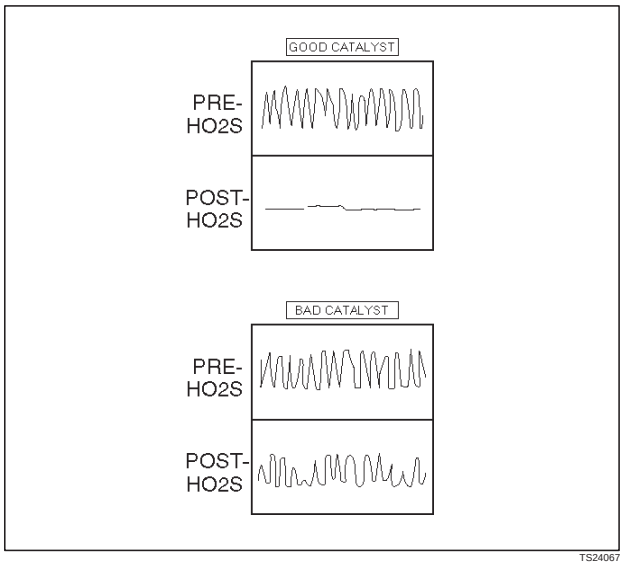

TS24067

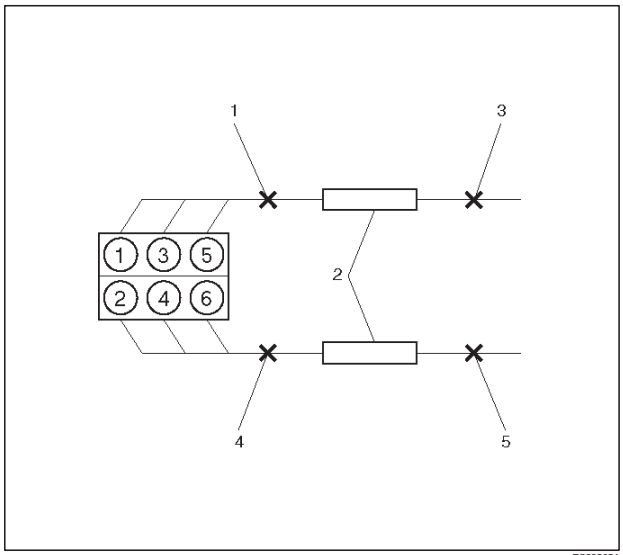

TS23365A

Legend

(1) Bank 1 Sensor 1 (Fuel Control)
(2) Catalytic Converter
(3) Bank 1 Sensor 2 (Catalyst Monitor)
(4) Bank 2 Sensor 1 (Fuel Control)
(5) Bank 2 Sensor 2 (Catalyst Monitor)

Intake Air Temperature (IAT) Sensor

The intake air temperature (IAT) sensor is a thermistor which changes its resistance based on the temperature of air entering the engine. Low temperature produces a high resistance of 100,000 ohms at –40˚C (–40˚F). High temperature causes low resistance of 70 ohms at 130˚C (266˚F) . The PCM supplies a 5-volt signal to the sensor through a resistor in the PCM and monitors the signal voltage. The voltage will be high when the incoming air is cold. The voltage will be low when the incoming air is hot. By measuring the voltage, the PCM calculates the incoming air temperature. The IAT sensor signal is used to adjust spark timing according to the incoming air density.

The Tech 2 displays the temperature of the air entering the engine. The temperature should read close to the ambient air temperature when the engine is cold and rise as underhood temperature increases. If the engine has not been run for several hours (overnight), the IAT sensor temperature and engine coolant temperature should read close to each other. A fault in the IAT sensor circuit will set DTC P0112 or DTC P0113.

Linear Exhaust Gas Recirculation (EGR) Control

The PCM monitors the exhaust gas recirculation (EGR) actual position and adjusts the pintle position accordingly. The PCM uses information from the following sensors to control the pintle position:

- Engine coolant temperature (ECT) sensor.
- Throttle position (TP) sensor.
- Mass air flow (MAF) sensor.

Mass Air Flow (MAF) Sensor

The mass air flow (MAF) sensor measures the difference between the volume and the quantity of air that enters the engine. “Volume” means the size of the space to be filled. “Quantity” means the number of air molecules that will fit into the space. This information is important to the PCM because heavier, denser air will hold more fuel than lighter, thinner air. The PCM adjusts the air/fuel ratio as needed depending on the MAF value. The Tech 2 reads the MAF value and displays it in terms of grams per second (gm/s). At idle, the Tech 2 should read between 4-7 gm/s on a fully warmed up engine. Values should change quickly on acceleration. Values should remain stable at any given RPM. A failure in the MAF sensor or circuit will set DTC P0101, DTC P0102, or DTC P0103.

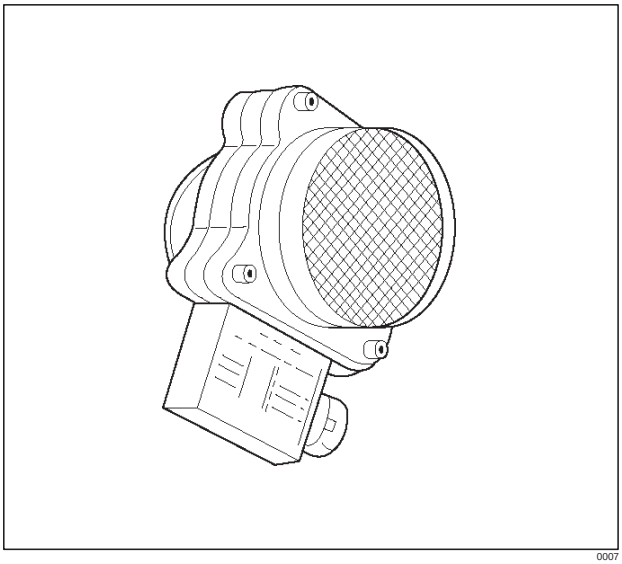

0007

Manifold Absolute Pressure (MAP) Sensor

The manifold absolute pressure (MAP) sensor responds to changes in intake manifold pressure (vacuum). The MAP sensor signal voltage to the PCM varies from below 2 volts at idle (high vacuum) to above 4 volts with the

Downloaded from www.Manualslib.com manuals search engine

ignition ON, engine not running or at wide-open throttle (low vacuum).

The MAP sensor is used to determine the following:

- Manifold pressure changes while the linear EGR flow test diagnostic is being run. Refer to *DTC P0401*.
- Engine vacuum level for other diagnostics.
- Barometric pressure (BARO).

If the PCM detects a voltage that is lower than the possible range of the MAP sensor, DTC P0107 will be set. A signal voltage higher than the possible range of the sensor will set DTC P0108. An intermittent low or high voltage will set DTC P1107, respectively. The PCM can detect a shifted MAP sensor. The PCM compares the MAP sensor signal to a calculated MAP based on throttle position and various engine load factors. If the PCM detects a MAP signal that varies excessively above or below the calculated value, DTC P0106 will set.

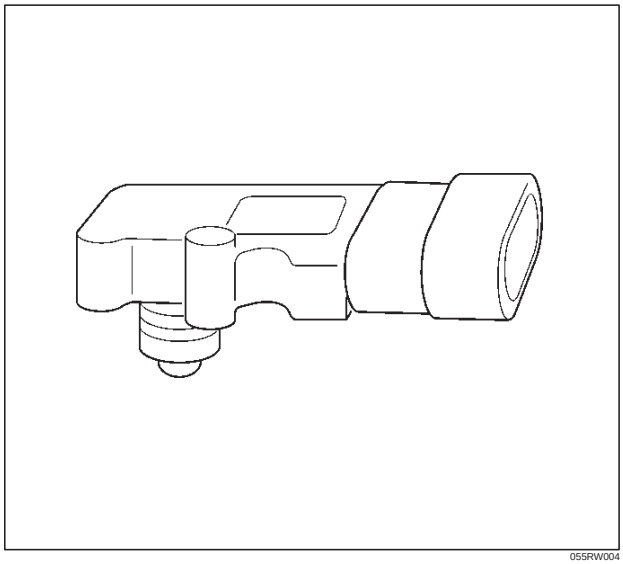

055RW004

Powertrain Control Module (PCM)

The powertrain control module (PCM) is located in the passenger compartment below the center console. The PCM controls the following:

- Fuel metering system.
- Transmission shifting (automatic transmission only).
- Ignition timing.
- On-board diagnostics for powertrain functions.

The PCM constantly observes the information from various sensors. The PCM controls the systems that affect vehicle performance. The PCM performs the diagnostic function of the system. It can recognize operational problems, alert the driver through the MIL (Check Engine lamp), and store diagnostic trouble codes (DTCs). DTCs identify the problem areas to aid the technician in making repairs.

PCM Function

The PCM supplies either 5 or 12 volts to power various sensors or switches. The power is supplied through resistances in the PCM which are so high in value that a test light will not light when connected to the circuit. In some cases, even an ordinary shop voltmeter will not give an accurate reading because its resistance is too low. Therefore, a digital voltmeter with at least 10 megohms input impedance is required to ensure accurate voltage readings. Tool J 39200 meets this requirement. The PCM controls output circuits such as the injectors, fan relays, etc., by controlling the ground or the power feed circuit through transistors or through either of the following two devices:

- Output Driver Module (ODM)
- Quad Driver Module (QDM)

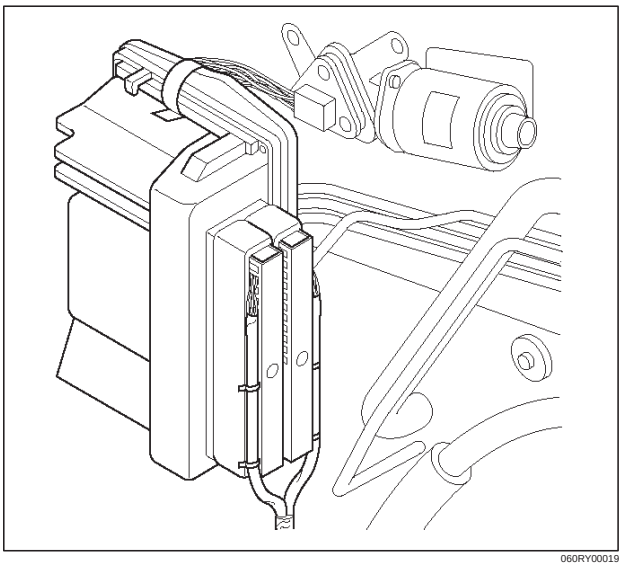

060RY00019

PCM Components

The PCM is designed to maintain exhaust emission levels to government mandated standards while providing excellent driveability and fuel efficiency. The PCM monitors numerous engine and vehicle functions via electronic sensors such as the throttle position (TP) sensor, heated oxygen sensor (HO2S), and vehicle speed sensor (VSS). The PCM also controls certain engine operations through the following:

- Fuel injector control
- Ignition control module
- ION sensing module
- Automatic transmission shift functions
- Cruise control
- Evaporative emission (EVAP) purge
- A/C clutch control

PCM Voltage Description

The PCM supplies a buffered voltage to various switches and sensors. It can do this because resistance in the PCM is so high in value that a test light may not illuminate when connected to the circuit. An ordinary shop voltmeter may not give an accurate reading because the voltmeter input impedance is too low. Use a 10-megohm input impedance digital voltmeter (such as J 39200) to assure accurate voltage readings.

The input/output devices in the PCM include analog-to-digital converters, signal buffers, counters, and special drivers. The PCM controls most components with electronic switches which complete a ground circuit

Downloaded from www.Manualslib.com manuals search engine

when turned “ON.” These switches are arranged in groups of 4 and 7, called either a surface-mounted quad driver module (QDM), which can independently control up to 4 output terminals, or QDMs which can independently control up to 7 outputs. Not all outputs are always used.

PCM Input/Outputs

Inputs – Operating Conditions Read

- Air Conditioning “ON” or “OFF”
- Engine Coolant Temperature
- Crankshaft Position
- Exhaust Oxygen Content
- Electronic Ignition
- Manifold Absolute Pressure
- Battery Voltage
- Throttle Position
- Vehicle Speed
- Fuel Pump Voltage
- Power Steering Pressure
- Intake Air Temperature
- Mass Air Flow
- Engine Knock
- Camshaft Position

Outputs – Systems Controlled

- EVAP Canister Purge
- Exhaust Gas Recirculation (EGR)
- Ignition Control
- Fuel Control
- ION Sensing Module
- Electric Fuel Pump
- Air Conditioning
- Diagnostics
  - Malfunction Indicator Lamp
  - Data Link Connector (DLC)
  - Data Output
- Transmission Control Module

PCM Service Precautions

The PCM is designed to withstand normal current draws associated with vehicle operation. Avoid overloading any circuit. When testing for opens and shorts, do not ground or apply voltage to any of the PCM’s circuits unless instructed to do so. These circuits should only be tested using digital voltmeter J 39200. The PCM should remain connected to the PCM or to a recommended breakout box.

Reprogramming The PCM

Reprogramming of the PCM is done without removing it from the vehicle . This provides a flexible and cost-effective method of making changes in software calibrations.

Refer to the latest Techline information on reprogramming or flashing procedures.

Throttle Position (TP) Sensor

The throttle position (TP) sensor is a potentiometer connected to the throttle shaft on the throttle body. The PCM monitors the voltage on the signal line and calculates throttle position. As the throttle valve angle is changed (accelerator pedal moved), the TP sensor signal also changes. At a closed throttle position, the output of the TP sensor is low. As the throttle valve opens, the output increases so that at wide open throttle (WOT), the output voltage should be above 4 volts.

The PCM calculates fuel delivery based on throttle valve angle (driver demand). A broken or loose TP sensor may cause intermittent bursts of fuel from an injector and unstable idle because the PCM thinks the throttle is moving.

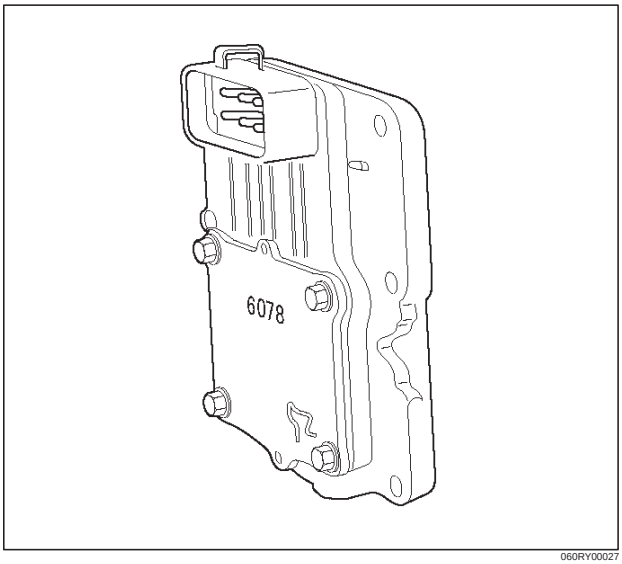

060RY00027

Transmission Fluid Temperature (TFT) Sensor

The transmission fluid temperature sensor is a thermistor which changes its resistance based on the temperature of the transmission fluid. For a complete description of the TFT sensor, refer to *4L30-E Automatic Transmission Diagnosis* section.

A failure in the TFT sensor or associated wiring will cause DTC P0712 or DTC P0713 to set. In this case, engine coolant temperature will be substituted for the TFT sensor value and the transmission will operate normally.

Transmission Range Switch

IMPORTANT: The vehicle should not be driven with the transmission range switch disconnected; idle quality will be affected.

The four inputs from the transmission range switch indicate to the PCM which position is selected by the transmission selector lever. This information is used for ignition timing, EVAP canister purge, EGR operation.

For more information on the transmission on the transmission range switch, refer to *4L30-E Automatic Transmission* section.

Downloaded from www.Manualslib.com manuals search engine

Vehicle Speed Sensor (VSS)

The PCM determines the speed of the vehicle by converting a plusing voltage signal from the vehicle speed sensor (VSS) into miles per hour. The PCM uses this signal to operate the cruise control, speedometer, and the TCC and shift solenoids in the transmission. For more information on the TCC and shift solenoids, refer to *4L30-E Automatic Transmission* section.

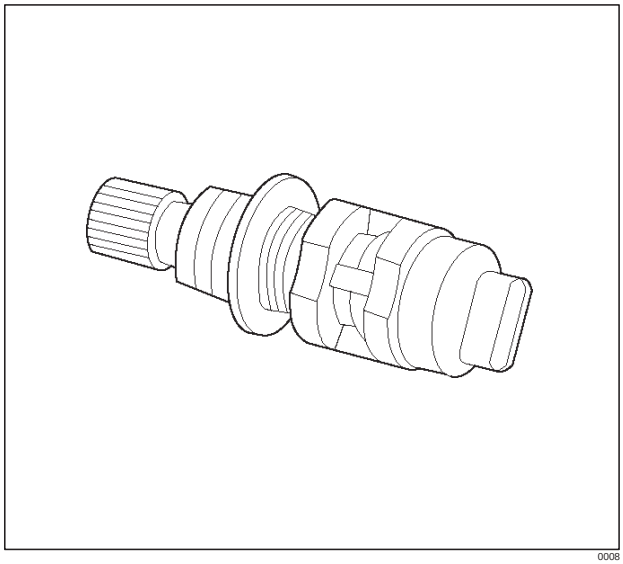

0008

Use of Circuit Testing Tools

Do not use a test light to diagnose the powertrain electrical systems unless specifically instructed by the diagnostic procedures. Use Connector Test Adapter Kit J 35616 whenever diagnostic procedures call for probing connectors.

Aftermarket Electrical and Vacuum Equipment

Aftermarket (add-on) electrical and vacuum equipment is defined as any equipment which connects to the vehicle's electrical or vacuum systems that is installed on a vehicle after it leaves the factory. No allowances have been made in the vehicle design for this type of equipment.

NOTE: No add-on vacuum equipment should be added to this vehicle.

NOTE: Add-on electrical equipment must only be connected to the vehicle's electrical system at the battery (power and ground).

Add-on electrical equipment, even when installed to these guidelines, may still cause the powertrain system to malfunction. This may also include equipment not connected to the vehicle electrical system such as portable telephones and radios. Therefore, the first step in diagnosing any powertrain problem is to eliminate all aftermarket electrical equipment from the vehicle. After this is done, if the problem still exists, it may be diagnosed in the normal manner.

Electrostatic Discharge Damage

Electronic components used in the PCM are often designed to carry very low voltage. Electronic components are susceptible to damage caused by electrostatic discharge. Less than 100 volts of static electricity can cause damage to some electronic components. By comparison, it takes as much as 4000 volts for a person to feel even the zap of a static discharge.

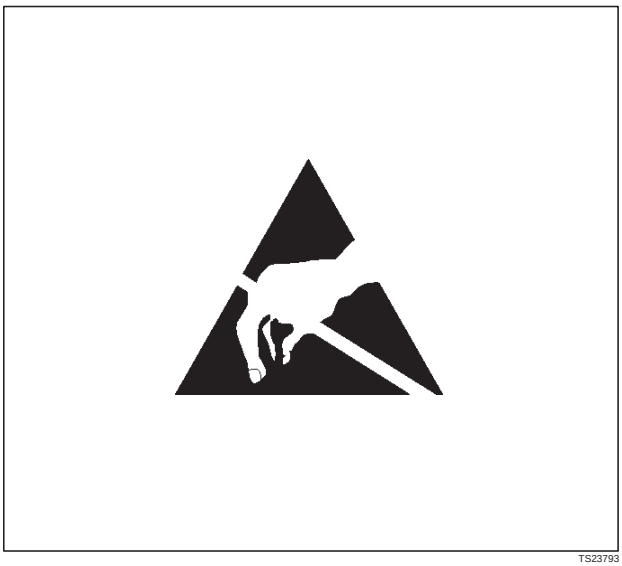

TS23793

There are several ways for a person to become statically charged. The most common methods of charging are by friction and induction.

- An example of charging by friction is a person sliding across a vehicle seat.
- Charge by induction occurs when a person with well insulated shoes stands near a highly charged object and momentary touches ground. Charges of the same polarity are drained off leaving the person highly charged with the opposite polarity. Static charges can cause damage, therefore it is important to use care when handling and testing electronic components.

NOTE: To prevent possible electrostatic discharge damage, follow these guidelines:

- Do not touch the PCM connector pins or soldered components on the PCM circuit board.
- Do not open the replacement part package until the part is ready to be installed.
- Before removing the part from the package, ground the package to a known good ground on the vehicle.
- If the part has been handled while sliding across the seat, while sitting down from a standing position, or while walking a distance, touch a known good ground before installing the part.

Upshift Lamp

Refer to *Manual Transmission* section.

General Description (Air Induction)

Air Induction System

The air induction system filters contaminants from the outside air, and directs the progress of the air as it is drawn into the engine. A remote-mounted air cleaner

Downloaded from www.Manualslib.com manuals search engine

prevents dirt and debris in the air from entering the engine. The air duct assembly routes filtered air to the throttle body. Air enters the engine by to following steps:

1. Through the throttle body.
2. Into the common chamber.
3. Through the cylinder head intake ports.
4. Into the cylinders.

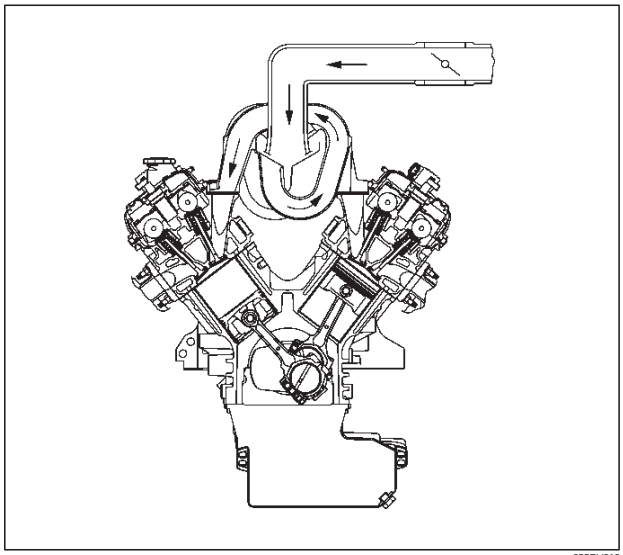

055RV010

General Description (Fuel Metering)

Acceleration Mode

The PCM provides extra fuel when it detects a rapid increase in the throttle position and the air flow.

Battery Voltage Correction Mode

When battery voltage is low, the PCM will compensate for the weak spark by increasing the following:

- The amount of fuel delivered.
- The idle RPM.
- Ignition dwell time.

CMP Signal

The PCM uses this signal to determine the position of the number 1 piston during its power stroke, allowing the PCM to calculate true sequential multiport fuel injection (SFI). Loss of this signal will set a DTC P0341. If the CMP signal is lost while the engine is running, the fuel injection system will shift to a calculated sequential fuel injection based on the last fuel injection pulse, and the engine will continue to run. The engine can be restarted and will run in the calculated sequential mode as long as the fault is present, with a 1-in-6 chance of being correct.

Clear Flood Mode

Clear a flooded engine by pushing the accelerator pedal down all the way. The PCM then de-energizes the fuel injectors. The PCM holds the fuel injectors de-energized as long as the throttle remains above 80% and the engine speed is below 800 RPM. If the throttle position becomes less than 80%, the PCM again begins to pulse the injectors “ON” and “OFF,” allowing fuel into the cylinders.

Deceleration Mode

The PCM reduces the amount of fuel injected when it detects a decrease in the throttle position and the air flow. When deceleration is very fast, the PCM may cut off fuel completely for short periods.

Engine Speed/Vehicle Speed/Fuel Disable Mode

The PCM monitors engine speed. It turns off the fuel injectors when the engine speed increase above 6400 RPM. The fuel injectors are turned back on when engine speed decreases below 6150 RPM.

Fuel Cutoff Mode

No fuel is delivered by the fuel injectors when the ignition is “OFF.” This prevents engine run-on. In addition, the PCM suspends fuel delivery if no reference pulses are detected (engine not running) to prevent engine flooding.

Fuel Injector

The sequential multiport fuel injection (SFI) fuel injector is a solenoid-operated device controlled by the PCM. The PCM energizes the solenoid, which opens a valve to allow fuel delivery.

The fuel is injected under pressure in a conical spray pattern at the opening of the intake valve. Excess fuel not used by the injectors passes through the fuel pressure regulator before being returned to the fuel tank.

A fuel injector which is stuck partly open will cause a loss of fuel pressure after engine shut down, causing long crank times.

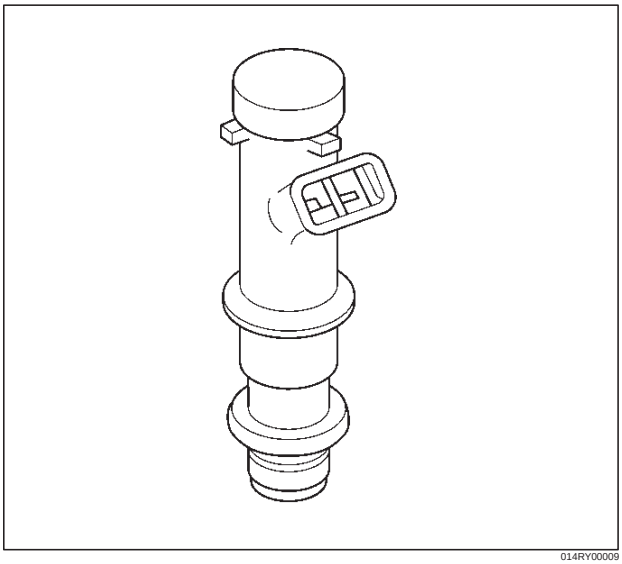

014RY00009

Fuel Metering System Components

The fuel metering system is made up of the following parts:

- The fuel injectors.
- The throttle body.
- The fuel rail.

Downloaded from www.Manualslib.com manuals search engine

- The fuel pressure regulator.
- The PCM.
- The crankshaft position (CKP) sensor.
- The camshaft position (CMP) sensor.
- The ION sensing module.
- The fuel pump.
- The fuel pump relay.

Basic System Operation

The fuel metering system starts with the fuel in the fuel tank. An electric fuel pump, located in the fuel tank, pumps fuel to the fuel rail through an in-line fuel filter. The pump is designed to provide fuel at a pressure above the pressure needed by the injectors. A fuel pressure regulator in the fuel rail keeps fuel available to the fuel injectors at a constant pressure. A return line delivers unused fuel back to the fuel tank. Refer to *Section 6C* for further information on the fuel tank, line filter, and fuel pipes.

Fuel Metering System Purpose

The basic function of the air/fuel metering system is to control the air/fuel delivery to the engine. Fuel is delivered to the engine by individual fuel injectors mounted in the intake manifold near each intake valve.

The main control sensor is the heated oxygen sensor (HO2S) located in the exhaust system. The HO2S tells the PCM how much oxygen is in the exhaust gas. The PCM changes the air/fuel ratio to the engine by controlling the amount of time that fuel injector is “ON.” The best mixture to minimize exhaust emissions is 14.7 parts of air to 1 part of gasoline by weight, which allows the catalytic converter to operate most efficiently. Because of the constant measuring and adjusting of the air/fuel ratio, the fuel injection system is called a “closed loop” system.

The PCM monitors signals from several sensors in order to determine the fuel needs of the engine. Fuel is delivered under one of several conditions called “modes.” All modes are controlled by the PCM.

Fuel Pressure Regulator

The fuel pressure regulator is a diaphragm-operated relief valve mounted on the fuel rail with fuel pump pressure on one side and manifold pressure on the other side. The fuel pressure regulator maintains the fuel pressure available to the injector at three times barometric pressure adjusted for engine load. It may be serviced separate.

If the pressure is too low, poor performance and a DTC P0131, DTC P0151,DTC P0171 or DTC P1171 will be the result. If the pressure is too high, excessive odor and/or a DTC P0132, DTC P0152,DTC P0172 will be the result. Refer to *Fuel System Diagnosis* for information on diagnosing fuel pressure conditions.

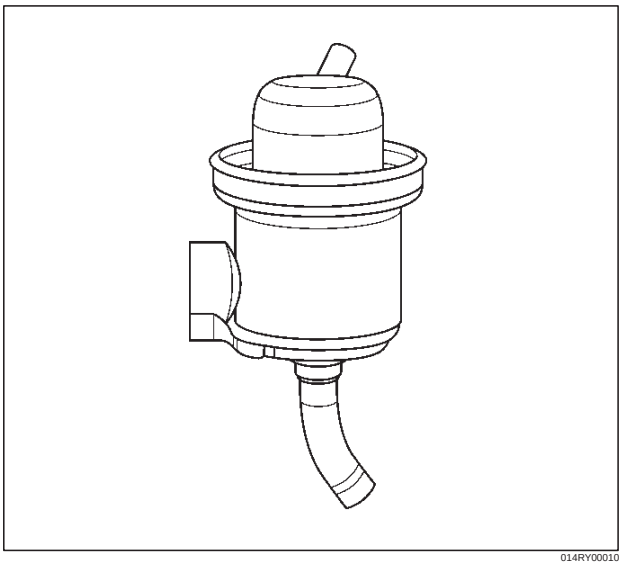

014RY00010

Fuel Pump Electrical Circuit

When the key is first turned “ON,” the PCM energizes the fuel pump relay for two seconds to build up the fuel pressure quickly. If the engine is not started within two seconds, the PCM shuts the fuel pump off and waits until the engine is cranked. When the engine is cranked and the 58 X crankshaft position signal has been detected by the PCM, the PCM supplies 12 volts to the fuel pump relay to energize the electric in-tank fuel pump.

An inoperative fuel pump will cause a “no-start” condition. A fuel pump which does not provide enough pressure will result in poor performance.

Fuel Rail

The fuel rail is mounted to the top of the engine and distributes fuel to the individual injectors. Fuel is delivered to the fuel inlet tube of the fuel rail by the fuel lines. The fuel goes through the fuel rail to the fuel pressure regulator. The fuel pressure regulator maintains a constant fuel pressure at the injectors. Remaining fuel is then returned to the fuel tank.

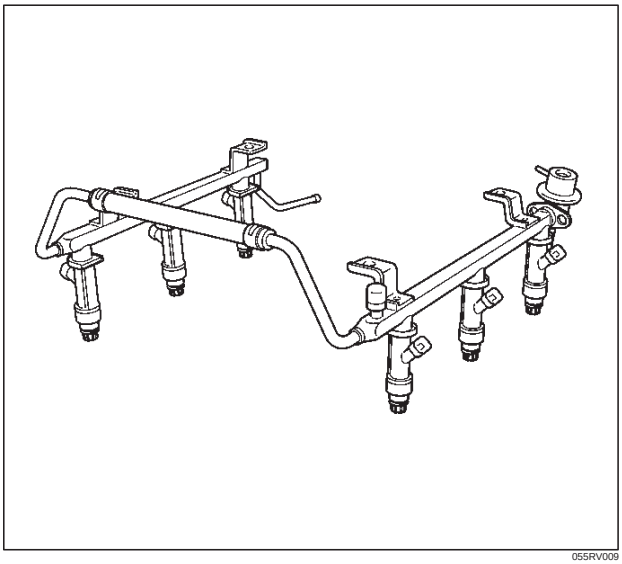

055RV009

Downloaded from www.Manualslib.com manuals search engine

Run Mode

The run mode has the following two conditions:

- Open loop
- Closed loop

When the engine is first started the system is in “open loop” operation. In “open loop,” the PCM ignores the signal from the heated oxygen sensor (HO2S). It calculates the air/fuel ratio based on inputs from the TP, ECT, and MAF sensors.

The system remains in “open loop” until the following conditions are met:

- The HO2S has a varying voltage output showing that it is hot enough to operate properly (this depends on temperature).
- The ECT has reached a specified temperature.
- A specific amount of time has elapsed since starting the engine.
- Engine speed has been greater than a specified RPM since start-up.

The specific values for the above conditions vary with different engines and are stored in the programmable read only memory (PROM). When these conditions are met, the system enters “closed loop” operation. In “closed loop,” the PCM calculates the air/fuel ratio (injector on-time) based on the signal from the HO2S. This allows the air/fuel ratio to stay very close to 14.7:1.

Starting Mode

When the ignition is first turned “ON,” the PCM energizes the fuel pump relay for two seconds to allow the fuel pump to build up pressure. The PCM then checks the engine coolant temperature (ECT) sensor and the throttle position (TP) sensor to determine the proper air/fuel ratio for starting.

The PCM controls the amount of fuel delivered in the starting mode by adjusting how long the fuel injectors are energized by pulsing the injectors for very short times.

Throttle Body Unit

The throttle body has a throttle plate to control the amount of air delivered to the engine. The TP sensor are also mounted on the throttle body. Vacuum ports located behind the throttle plate provide the vacuum signals needed by various components.

Engine coolant is directed through a coolant cavity in the throttle body to warm the throttle valve and to prevent icing.

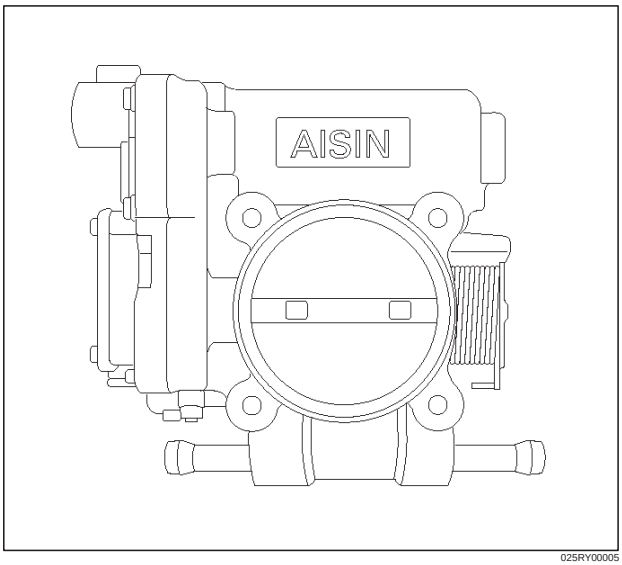

025RY00005

General Description (Electronic Ignition System)

Camshaft Position (CMP) Sensor

CMP is located Left Rear cylinder head. When the Hall-effect switch is activated, it grounds the signal line to the PCM, pulling the camshaft position sensor signal circuit’s applied voltage low. This is a CMP signal. The CMP signals is created as piston #1 is approximately 25° after top dead counter on the power stroke. If the correct CMP signal is not received by the PCM, DTC P0341 will be set.

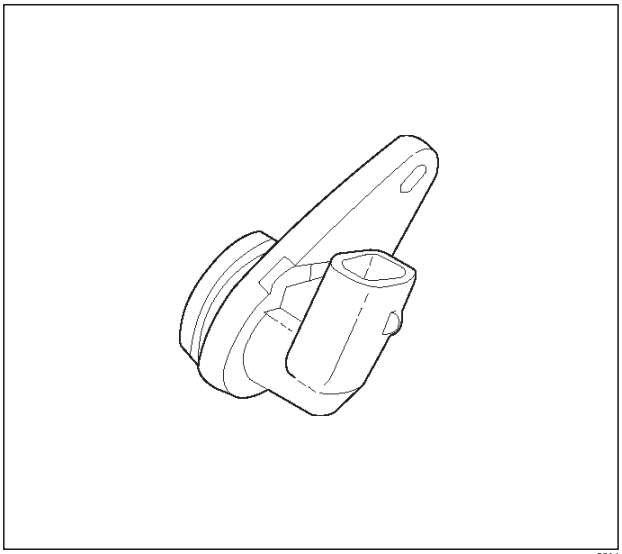

0014

Crankshaft Position (CKP) Sensor

The crankshaft position (CKP) sensor provides a signal used by the powertrain control module (PCM) to calculate the ignition sequence. The sensor initiates the 58X reference pulses which the PCM uses to calculate RPM and crankshaft position. Refer to *Electronic Ignition System* section for additional information.

Downloaded from www.Manualslib.com manuals search engine

Electronic Ignition

The electronic ignition system controls fuel combustion by providing a spark to ignite the compressed air/fuel mixture at the correct time. To provide optimum engine performance, fuel economy, and control of exhaust emissions, the PCM controls the spark advance of the ignition system. Electronic ignition has the following advantages over a mechanical distributor system:

- No moving parts.
- Less maintenance.
- Remote mounting capability.
- No mechanical load on the engine.
- More coil cooldown time between firing events.
- Elimination of mechanical timing adjustments.
- Increased available ignition coil saturation time.

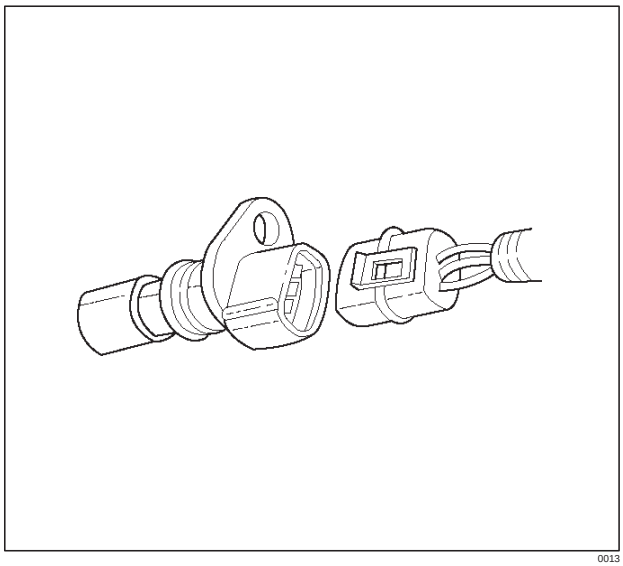

0013

Ignition Coils

A separate coil-at-plug module is located at each spark plug. The coil-at-plug module is attached to the engine with two screws. It is installed directly to the spark plug by an electrical contact inside a rubber boot. A three-way connector provides 12-volt primary supply from the 15-amp ignition fuse, a ground-switching trigger line from the PCM, and a ground.

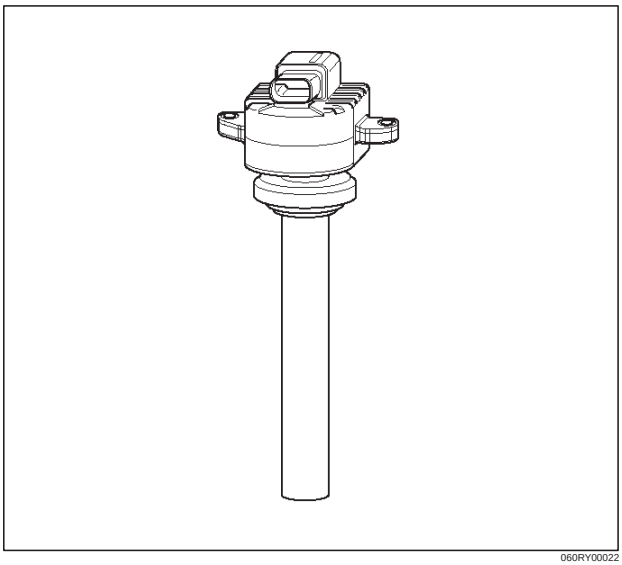

060RY00022

Ignition Control

The ignition control (IC) spark timing is the PCM's method of controlling the spark advance and the ignition dwell. The IC spark advance and the ignition dwell are calculated by the PCM using the following inputs:

- Engine speed.
- Crankshaft position (58X reference).
- Camshaft position (CMP) sensor.
- Engine coolant temperature (ECT) sensor.
- Throttle position (TP) sensor.
- ION sensing module.
- Park/Neutral position (PRNDL input).
- Vehicle speed (vehicle speed sensor).
- PCM and ignition system supply voltage.
- The crankshaft positron (CKP) sensor sends the PCM a 58X signal related to the exact position of the crankshaft.

Downloaded from www.Manualslib.com manuals search engine

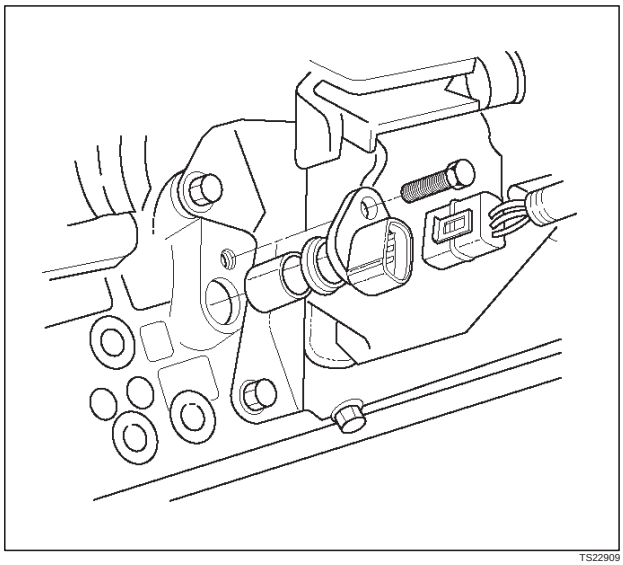

TS22909

- The camshaft position (CMP) sensor sends a signal related to the position of the camshaft.

Based on these sensor signals and engine load information, the PCM sends 5V to each ignition coil.

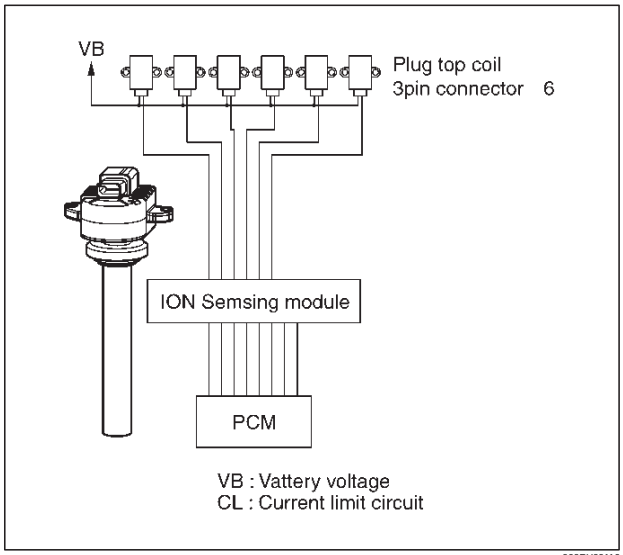

060RY00116

This module has the function to energize and de-energize the primary ignition coil in response to signals from the PCM. The Throttle PCM controls ignition timing and dwell time.

Continuity and out-or-range value check:

This diagnosis detects open circuit or short-circuiting in the Electronic Spark Timing (EST) line by monitoring EST signals. A failure determination is made when the signal voltage remains higher or lower than the threshold for corresponding fault code beyond a predetermined time period.

Diagnosis enabling conditions are as follows:

- RPM is higher than the specified threshold.
- EST line is enabled.

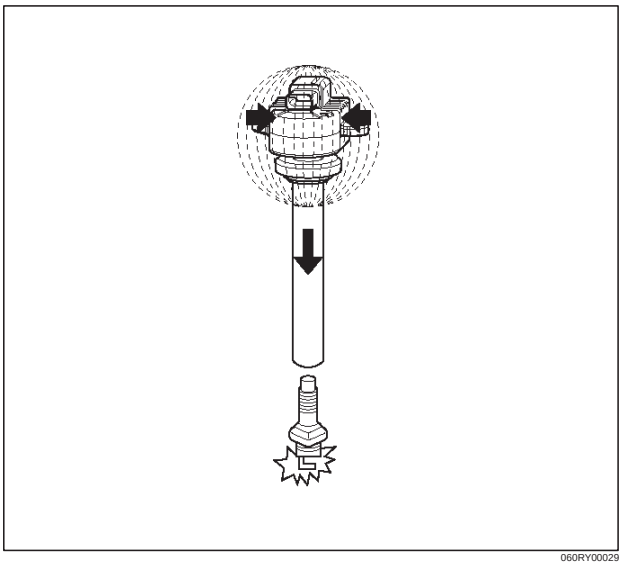

060RY00029

Ignition Control PCM Output

The PCM provides a zero volt (actually about 100 mV to 200 mV) or a 5-volt output signal to the ignition control (IC) module. Each spark plug has its own primary and secondary ignition coil assembly (”coil-at-plug”) located at the spark plug itself. When the ignition coil receives the 5-volt signal from the PCM, it provides a ground path for the B+ supply to the primary side of the coil-at -plug module. When the PCM shuts off the 5-volt signal to the ION sensing module, the ground path for the primary coil is broken. The magnetic field collapses and induces a high voltage secondary impulse which fires the spark plug and ignites the air/fuel mixture.

The circuit between the PCM and the ignition coil is monitored for open circuits, shorts to voltage, and shorts to ground. If the PCM detects one of these events, it will set one of the following DTCs:

- P0351: Ignition coil Fault on Cylinder #1
- P0352: Ignition coil Fault on Cylinder #2
- P0353: Ignition coil Fault on Cylinder #3
- P0354: Ignition coil Fault on Cylinder #4
- P0355: Ignition coil Fault on Cylinder #5
- P0356: Ignition coil Fault on Cylinder #6

Powertrain Control Module (PCM)

The PCM is responsible for maintaining proper spark and fuel injection timing for all driving conditions. To provide optimum driveability and emissions, the PCM monitors the input signals from the following components in order to calculate spark timing:

- Engine coolant temperature (ECT) sensor.
- Intake air temperature (IAT) sensor.
- Mass air flow (MAF) sensor.
- PRNDL input from transmission range switch.
- Throttle position (TP) sensor.
- Vehicle speed sensor (VSS) .
- Crankshaft position (CKP) sensor.

Downloaded from www.Manualslib.com manuals search engine

Spark Plug

Although worn or dirty spark plugs may give satisfactory operation at idling speed, they frequency fail at higher engine speeds. Faulty spark plugs may cause poor fuel economy, power loss, loss of speed, hard starting and generally poor engine performance. Follow the scheduled maintenance service recommendations to ensure satisfactory spark plug performance. Refer to *Maintenance and Lubrication* section.

Normal spark plug operation will result in brown to grayish-tan deposits appearing on the insulator portion of the spark plug. A small amount of red-brown, yellow, and white powdery material may also be present on the insulator tip around the center electrode. These deposits are normal combustion by-products of fuels and lubricating oils with additives. Some electrode wear will also occur. Engines which are not running properly are often referred to as “misfiring.” This means the ignition spark is not igniting the air/fuel mixture at the proper time. While other ignition and fuel system causes must also be considered, possible causes include ignition system conditions which allow the spark voltage to reach ground in some other manner than by jumping across the air gap at the tip of the spark plug, leaving the air/fuel mixture unburned. Refer to *DTC P0300*. Misfiring may also occur when the tip of the spark plug becomes overheated and ignites the mixture before the spark jumps. This is referred to as “pre-ignition.”

Spark plugs may also misfire due to fouling, excessive gap, or a cracked or broken insulator. If misfiring occurs before the recommended replacement interval, locate and correct the cause.

Carbon fouling of the spark plug is indicated by dry, black carbon (soot) deposits on the portion of the spark plug in the cylinder. Excessive idling and slow speeds under light engine loads can keep the spark plug temperatures so low that these deposits are not burned off. Very rich fuel mixtures or poor ignition system output may also be the cause. Refer to DTC P0172.

Oil fouling of the spark plug is indicated by wet oily deposits on the portion of the spark plug in the cylinder, usually with little electrode wear. This may be caused by oil during break-in of new or newly overhauled engines.

Deposit fouling of the spark plug occurs when the normal red-brown, yellow or white deposits of combustion by products become sufficient to cause misfiring. In some cases, these deposits may melt and form a shiny glaze on the insulator around the center electrode. If the fouling is found in only one or two cylinders, valve stem clearances or intake valve seals may be allowing excess lubricating oil to enter the cylinder, particularly if the deposits are heavier on the side of the spark plug facing the intake valve.

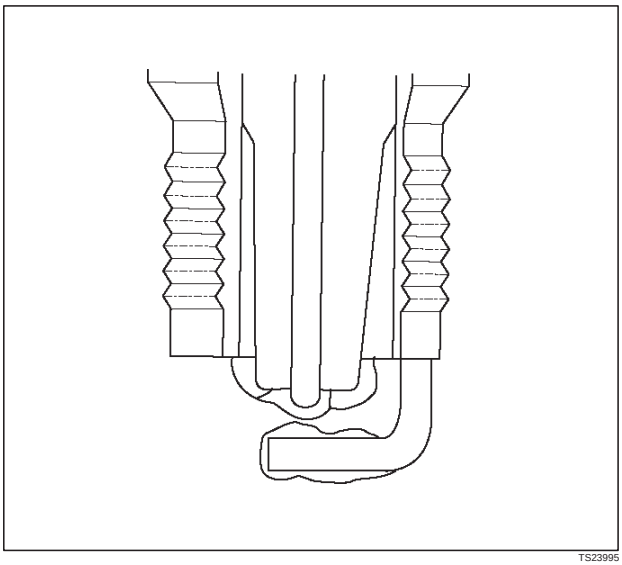

TS23995

Excessive gap means that the air space between the center and the side electrodes at the bottom of the spark plug is too wide for consistent firing. This may be due to improper gap adjustment or to excessive wear of the electrode during use. A check of the gap size and comparison to the gap specified for the vehicle in *Maintenance and Lubrication* section will tell if the gap is too wide. A spark plug gap that is too small may cause an unstable idle condition. Excessive gap wear can be an indication of continuous operation at high speeds or with engine loads, causing the spark to run too hot. Another possible cause is an excessively lean fuel mixture.

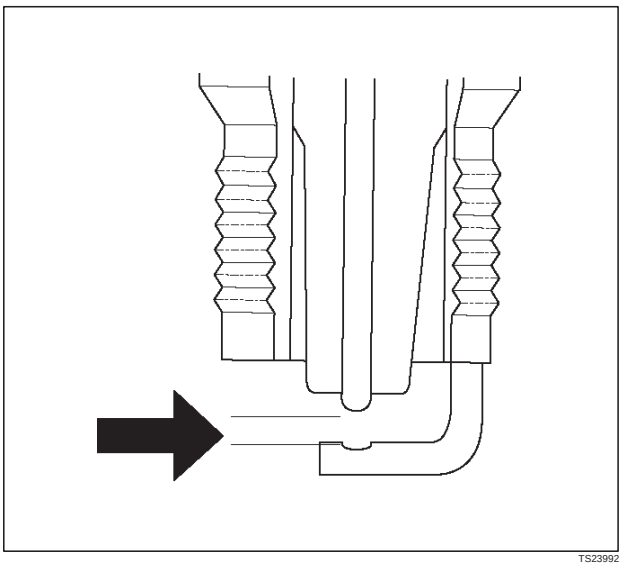

TS23992

Low or high spark plug installation torque or improper seating can result in the spark plug running too hot and can cause excessive center electrode wear. The plug and the cylinder head seats must be in good contact for proper heat transfer and spark plug cooling. Dirty or damaged threads in the head or on the spark plug can keep it from seating even though the proper torque is applied. Once spark plugs are properly seated, tighten them to the torque shown in the Specifications Table. Low torque may result in poor contact of the seats due to a loose spark plug. Overtightening may cause the spark

Downloaded from www.Manualslib.com manuals search engine

plug shell to be stretched and will result in poor contact between the seats. In extreme cases, exhaust blow-by and damage beyond simple gap wear may occur.

Cracked or broken insulators may be the result of improper installation, damage during spark plug re-gapping, or heat shock to the insulator material. Upper insulators can be broken when a poorly fitting tool is used during installation or removal, when the spark plug is hit from the outside, or is dropped on a hard surface. Cracks in the upper insulator may be inside the shell and not visible. Also, the breakage may not cause problems until oil or moisture penetrates the crack later.

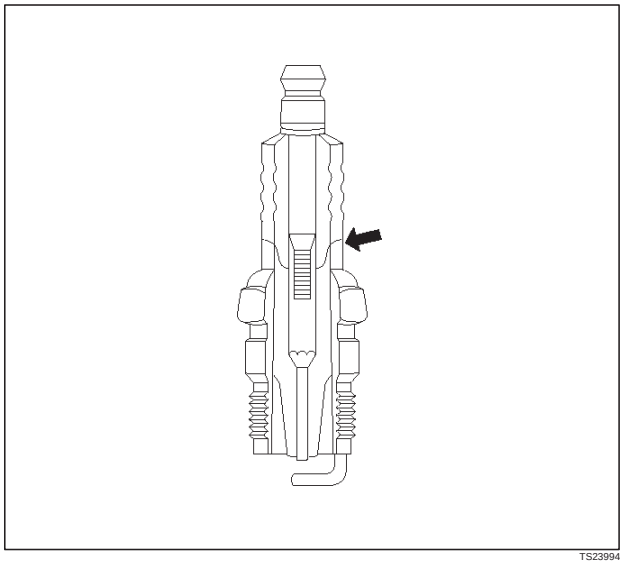

TS23994

A broken or cracked lower insulator tip (around the center electrode) may result from damage during re-gapping or from “heat shock” (spark plug suddenly operating too hot).

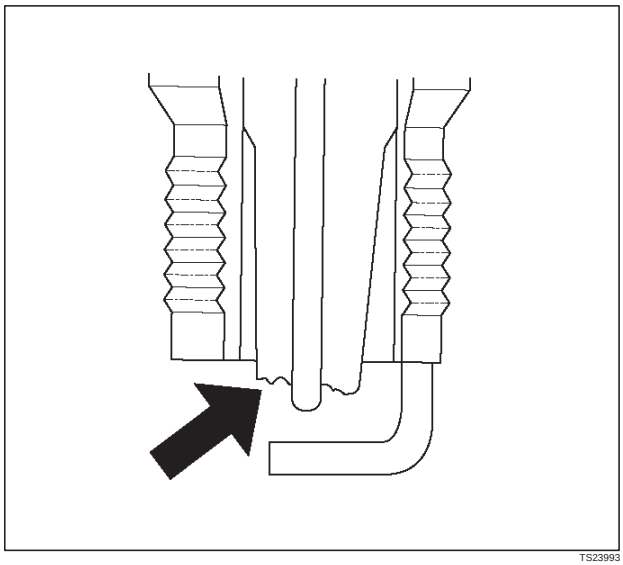

TS23993

- Damage during re-gapping can happen if the gapping tool is pushed against the center electrode or the insulator around it, causing the insulator to crack. When re-gapping a spark plug, make the adjustment by bending only the ground side terminal, keeping the tool clear of other parts.
- ”Heat shock” breakage in the lower insulator tip generally occurs during several engine operating conditions (high speeds or heavy loading) and may be caused by over-advanced timing or low grade fuels. Heat shock refers to a rapid increase in the tip temperature that causes the insulator material to crack.

Spark plugs with less than the recommended amount of service can sometimes be cleaned and re-gapped , then returned to service. However, if there is any doubt about the serviceability of a spark plug, replace it. Spark plugs with cracked or broken insulators should always be replaced.

A/C Clutch Diagnosis

A/C Clutch Circuit Operation

A 12-volt signal is supplied to the A/C request input of the PCM when the A/C is selected through the A/C control switch.

The A/C compressor clutch relay is controlled through the PCM. This allows the PCM to modify the idle air control position prior to the A/C clutch engagement for better idle quality. If the engine operating conditions are within their specified calibrated acceptable ranges, the PCM will enable the A/C compressor relay. This is done by providing a ground path for the A/C relay coil within the PCM. When the A/C compressor relay is enabled, battery voltage is supplied to the compressor clutch coil. The PCM will enable the A/C compressor clutch whenever the engine is running and the A/C has been requested. The PCM will not enable the A/C compressor clutch if any of the following conditions are met:

- The throttle is greater than 90%.
- The engine speed is greater than 6315 RPM.
- The ECT is greater than 119˚C (246˚F).
- The IAT is less than 5˚C (41˚F).
- The throttle is more than 80% open.

A/C Clutch Circuit Purpose

The A/C compressor operation is controlled by the powertrain control module (PCM) for the following reasons:

- It improvises idle quality during compressor clutch engagement.
- It improvises wide open throttle (WOT) performance.
- It provides A/C compressor protection from operation with incorrect refrigerant pressures.

The A/C electrical system consists of the following components:

- The A/C control head.
- The A/C refrigerant pressure switches.
- The A/C compressor clutch.
- The A/C compressor clutch relay.
- The PCM.

A/C Request Signal

This signal tells the PCM when the A/C mode is selected at the A/C control head. The PCM uses this to adjust the idle speed before turning on the A/C clutch. The A/C

Downloaded from www.Manualslib.com manuals search engine

compressor will be inoperative if this signal is not available to the PCM.
Refer to *A/C Clutch Circuit Diagnosis* section for A/C wiring diagrams and diagnosis for A/C electrical system.

General Description (Evaporative (EVAP) Emission System)

EVAP Emission Control System Purpose

The basic evaporative emission (EVAP) control system used on all vehicles is the charcoal canister storage method. Gasoline vapors from the fuel tank flow into the canister through the inlet labeled “TANK.” These vapors are absorbed into the activated carbon (charcoal) storage device (canister) in order to hold the vapors when the vehicle is not operating. The canister is purged by PCM control when the engine coolant temperature is over 60˚C (140˚F), the IAT reading is over 10˚C (50˚F), and the engine has been running. Air is drawn into the canister through the air inlet grid. The air mixes with the vapor and the mixture is drawn into the intake manifold.

EVAP Emission Control System Operation

The EVAP canister purge is controlled by a solenoid valve that allows the manifold vacuum to purge the canister. The powertrain control module (PCM) supplies a ground to energize the solenoid valve (purge on). The EVAP purge solenoid control is pulse-width modulated (PWM) (turned on and off several times a second). The duty cycle (pulse width) is determined by engine operating conditions including load, throttle positron, coolant temperature and ambient temperature. The duty cycle is calculated by the PCM. The output is commanded when the appropriate conditions have been met. These conditions are:

- The engine is fully warmed up.
- The engine has been running for a specified time.
- The IAT reading is above 10˚C (50˚F).

A continuous purge condition with no purge commanded by the PCM will set a DTC P1441.

Poor idle, stalling and poor driveability can be caused by:

- A malfunctioning purge solenoid.
- A damaged canister.
- Hoses that are split, cracked, or not connected properly.

Enhanced Evaporative Emission Control System

The basic purpose of the Enhanced Evaporative Emissions control system is the same as other EVAP systems. A charcoal-filled canister captures and stores gasoline fumes. When the PCM determines that the time is right, it opens a purge valve which allows engine vacuum to draw the fumes into the intake manifold.
The difference between this and other systems is that the PCM monitors the vacuum and/or pressure in the system to determine if there is any leakage. If the PCM determines that the EVAP system is leaking or not functioning properly, it sets a Diagnostic Trouble Code (DTC) in the PCM memory.
The enhanced EVAP system is required to detect evaporative fuel system leaks as small as 0.040 in. (1.0 mm) between the fuel filler cap and purge solenoid. The system can test the evaporative system integrity by applying a vacuum signal (ported or manifold) to the fuel tank to create a small vacuum. The PCM then monitors the ability of the system to maintain the vacuum. If the vacuum remains for a specified period of time, there are no evaporative leaks and a PASS report is sent to the diagnostic executive. If there is a leak, the system either will not achieve a vacuum, or a vacuum cannot be maintained. Usually, a failure can only be detected after a cold start with a trip of sufficient length and driving conditions to run the needed tests. The enhanced EVAP system diagnostic will conduct up to eight specific sub-tests to detect fault conditions. If the diagnostic fails a sub-test, the PCM will store a Diagnostic Trouble Code (DTC) to indicate the type of detected.

Downloaded from www.Manualslib.com manuals search engine

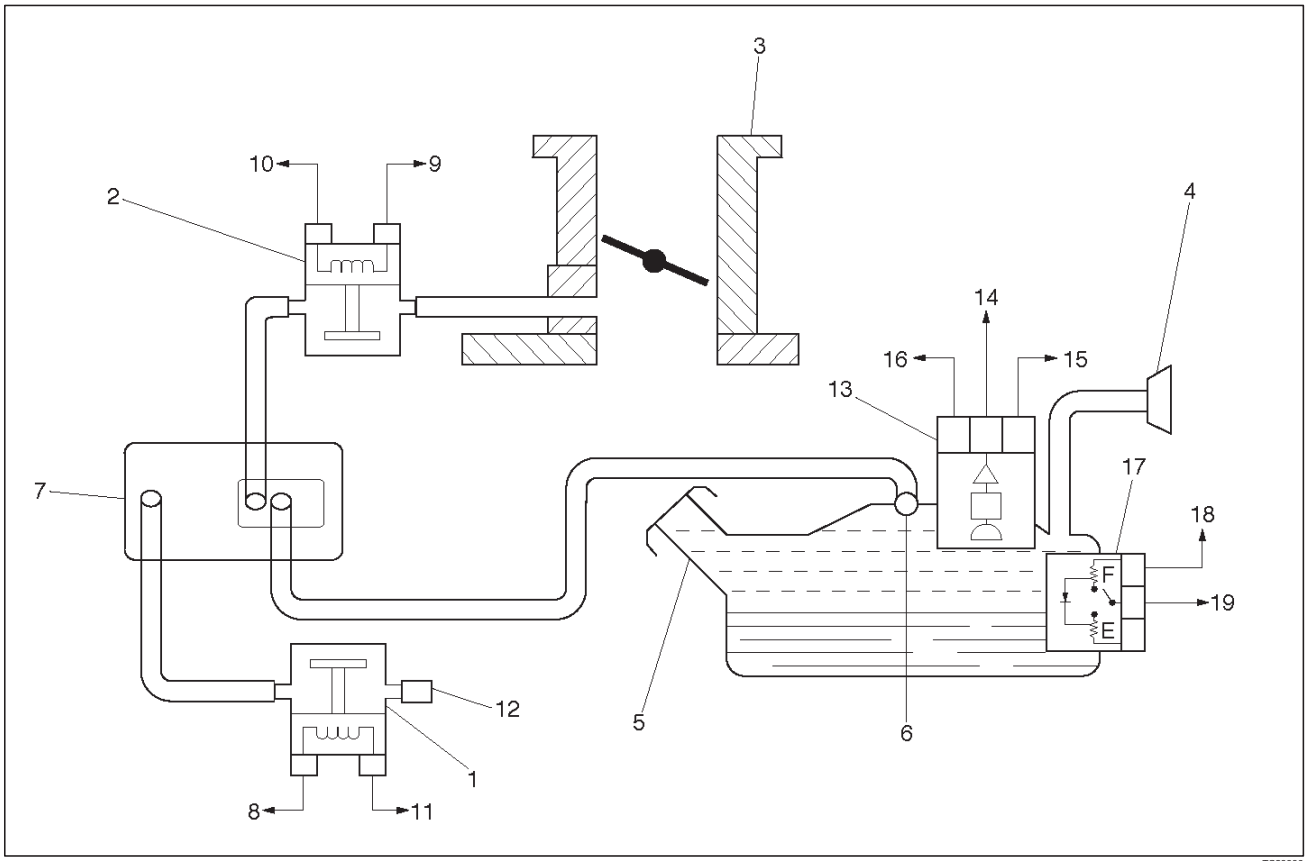

Legend

(1) Vent Solenoid
(2) EVAP Purge Solenoid
(3) Throttle Body
(4) Fuel Filler Neck
(5) Fuel Tank
(6) Rollover Valve
(7) EVAP Canister
(8) Ignition Feed
(10) EVAP Purge Solenoid Driver Signal from PCM
(11) Vent Solenoid Driver Signal from PCM
(12) Vent Filter
(13) Fuel Tank Pressure Sensor
(14) Fuel Tank Pressure Signal to PCM
(15) 5 Volt Reference “A” Circuit from PCM
(16) Sensor Ground Circuit from PCM
(17) Fuel Level Sensor
(18) Fuel Level Signal to PCM
(19) 5 Volt Return

Electrical Components

The electrical components that make up the enhanced EVAP system are:

- Fuel Tank Pressure Sensor. The fuel tank pressure sensor is a three-wire strain gauge sensor similar to a common MAP sensor. However, the fuel tank pressure sensor has very different electrical characteristics due to its pressure differential design. The sensor measures the difference between the air pressure (or vacuum) in the fuel tank and the outside air pressure.

  The sensor mounts at the top of the fuel pump assembly. A three-wire electrical harness connects it to the PCM. The PCM supplies a five-volt reference voltage and a ground to the sensor. The sensor will return a voltage between 0.1 and 4.9 volts. When the air pressure in the fuel tank is equal to the outside air pressure, such as when the fuel cap is removed, the output voltage of the sensor will be 1.3 to 1.7 volts.

  When the air pressure in the fuel tank is 4.5 in. H2O (1.25 kPa), the sensor output voltage will be 0.5 ± 0.2 V. When there is neither vacuum nor pressure in the fuel tank, the sensor voltage will be 1.5 V. At –14 in. H2O (–3.75 kPa), the sensor voltage will be 4.5 ± 0.2 V.

Downloaded from www.Manualslib.com manuals search engine

- EVAP Canister Purge Solenoid. Normally closed, the purge solenoid opens upon the PCM's signal to allow engine vacuum to purge gasoline fumes from the canister. Mounted on the water pipe to front of the engine assembly.

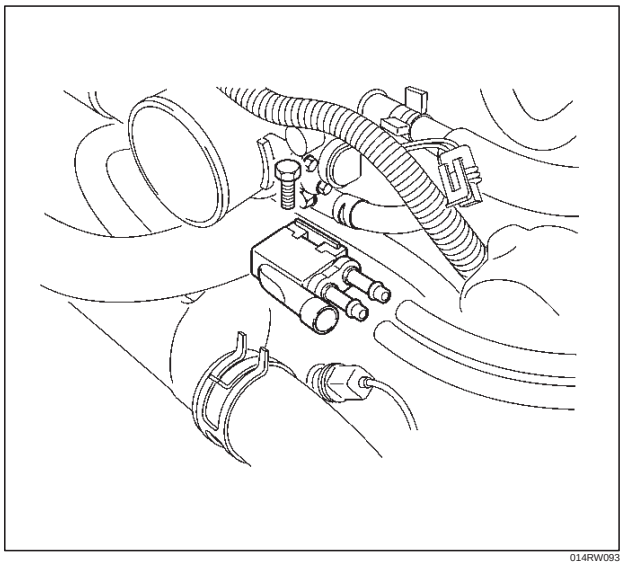

014RW093

- EVAP Canister Vent Solenoid. Located next to the canister, the vent solenoid opens to allow air into the EVAP system. Fresh air is necessary to completely remove gasoline fumes from the canister during purge. The EVAP vent solenoid closes to seal off the evaporative emissions system for leak testing.

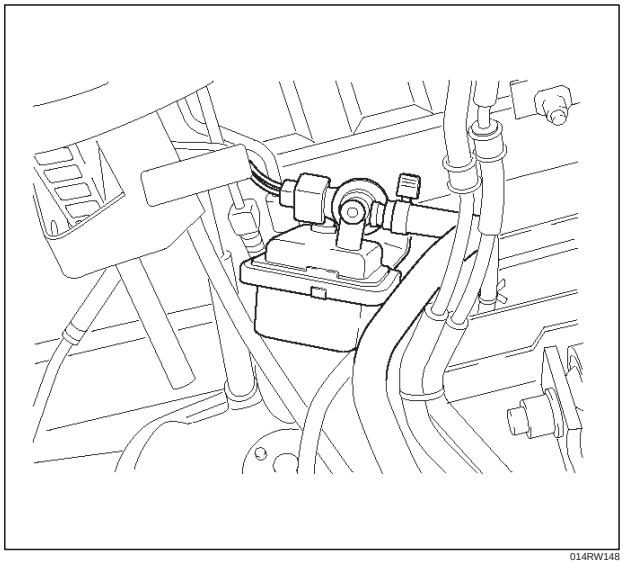

014RW148

- Fuel Level Sensor. The fuel level sensor is an important input to the PCM for the enhanced EVAP system diagnostic. The PCM needs fuel level information to know the volume of fuel in the tank. The fuel level affects the rate of change of air pressure in the EVAP system. Several of the enhanced EVAP system diagnostic sub-tests are dependent upon correct fuel level information. The diagnostic will not run when the tank is less than 15% or more than 85% full. Be sure to diagnose any Fuel Level Sensor DTCs first, as they can cause other DTCs to set.

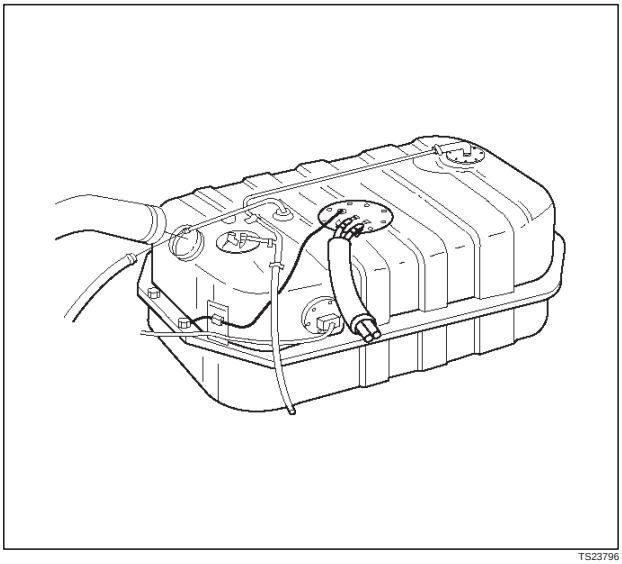

TS23796

- Manifold Absolute Pressure (MAP) Sensor. The PCM compares the signals from the fuel tank pressure sensor and the MAP sensor to ensure that a relative vacuum is maintained the EVAP system.

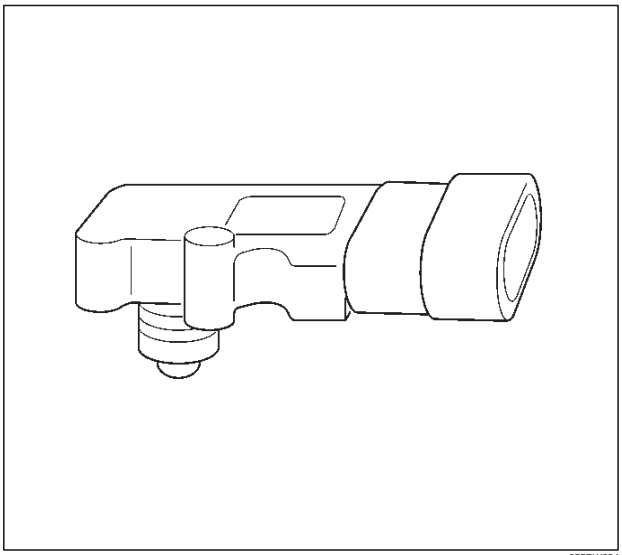

055RW004

Downloaded from www.Manualslib.com manuals search engine

Non-Electrical Components

- Purge/Vacuum Hoses. Made of rubber compounds, these hoses route the gasoline fumes from their sources to the canister and from the canister to the intake air flow.
- EVAP Canister. Mounted on a bracket ahead of the fuel tank, the canister stores fuel vapors until the PCM determines that engine conditions are right for them to be remove and burned.
- Fuel Tank. The tank has a built-in air space designed for the collection of gasoline fumes.

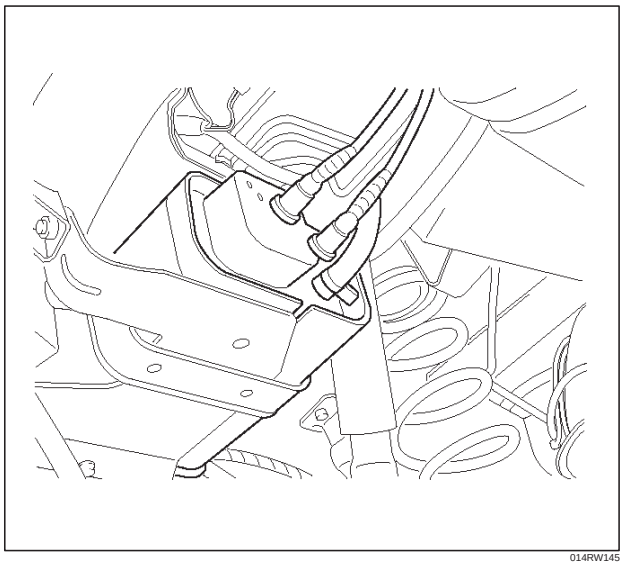

014RW145

- Vacuum Source. The vacuum source is split between two ports, one on either side of the throttle body.
- Fuel Cap. The fuel cap is designed to be an integral part of the EVAP system.

System Fault Detection

The EVAP leak detection strategy is based on applying vacuum to the EVAP system and monitoring vacuum decay. The PCM monitors vacuum level via the fuel tank pressure sensor. At an appropriate time, the EVAP purge solenoid and the EVAP vent solenoid are turned “ON,” allowing the engine vacuum to draw a small vacuum on the entire evaporative emission system.

After the desired vacuum level has been achieved, the EVAP purge solenoid is turned “OFF,” sealing the system. A leak is detected by monitoring for a decrease in vacuum level over a given time period, all other variables remaining constant. A small leak in the system will cause DTC P0442 to be set.

If the desired vacuum level cannot be achieved in the test described above, a large leak or a faulty EVAP purge solenoid is indicated.

Leaks can be caused by the following conditions:

- Disconnected or faulty fuel tank pressure sensor
- Missing or faulty fuel cap
- Disconnected, damaged, pinched, or blocked EVAP purge line
- Disconnected or damaged EVAP vent hose
- Disconnected, damaged, pinched, or blocked fuel tank vapor line
- Disconnected or faulty EVAP purge solenoid
- Disconnected or faulty EVAP vent solenoid
- Open ignition feed circuit to the EVAP vent or purge solenoid
- Damaged EVAP canister
- Leaking fuel sender assembly O-ring
- Leaking fuel tank or fuel filler neck

A restricted or blocked EVAP vent path is detected by drawing vacuum into the EVAP system, turning “OFF” the EVAP vent solenoid and the EVAP purge solenoid (EVAP vent solenoid “OPEN,” EVAP purge Pulse Width Modulate (PWM) “0%”) and monitoring the fuel tank vacuum sensor input. With the EVAP vent solenoid open, any vacuum in the system should decrease quickly unless the vent path is blocked. A blockage like this will set DTC P0446 and can be caused by the following conditions:

- Faulty EVAP vent solenoid (stuck closed)
- Plugged, kinked or pinched vent hose
- Shorted EVAP vent solenoid driver circuit
- Plugged EVAP canister

The PCM supplies a ground to energize the purge solenoid (purge “ON”). The EVAP purge control is PWM, or turned “ON” and “OFF,” several times a second. The duty cycle (pulse width) is determined by engine operating conditions including load, throttle position, coolant temperature and ambient temperature. The duty cycle is calculated by the PCM and the output is commanded when the appropriate conditions have been met.

The system checks for conditions that cause the EVAP system to purge continuously by commanding the EVAP vent solenoid “ON” and the EVAP purge solenoid “OFF” (EVAP vent solenoid “CLOSED,” EVAP purge PWM “0%”). If fuel tank vacuum level increases during the test, a continuous purge flow condition is indicated, which will set a DTC P1441. This can be cause by the following conditions:

- EVAP purge solenoid leaking
- EVAP purge and engine vacuum lines switched at the EVAP purge solenoid
- EVAP purge solenoid driver circuit grounded

General Description (Exhaust Gas Recirculation (EGR) System)

EGR Purpose

The exhaust gas recirculation (EGR) system is use to reduce emission levels of oxides of nitrogen (NOx). NOx emission levels are caused by a high combustion temperature. The EGR system lowers the NOx emission levels by decreasing the combustion temperature.

Downloaded from www.Manualslib.com manuals search engine

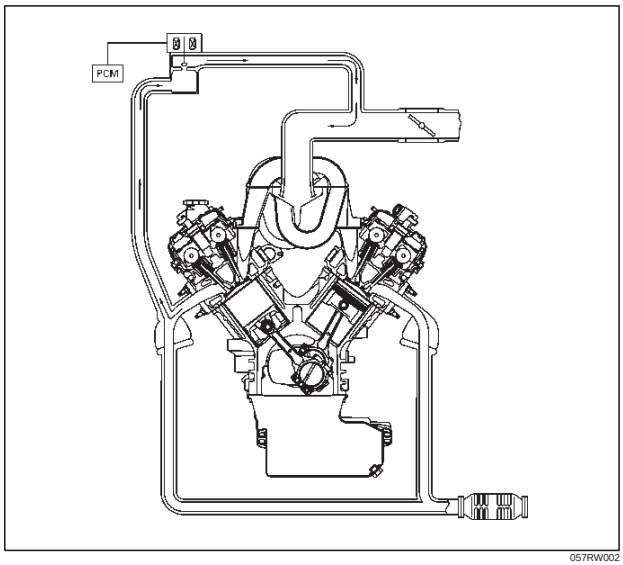

057RW002

Linear EGR Valve

The main element of the system is the linear EGR valve. The EGR valve feeds small amounts of exhaust gas back into the combustion chamber. The fuel/air mixture will be diluted and combustion temperatures reduced.

Linear EGR Control

The PCM monitors the EGR actual positron and adjusts the pintle position accordingly. The uses information from the following sensors to control the pintle position:

- Engine coolant temperature (ECT) sensor.
- Throttle position (TP) sensor.
- Mass air flow (MAF) sensor.

Linear EGR Valve Operation and Results of Incorrect Operation

The linear EGR valve is designed to accurately supply EGR to the engine independent of intake manifold vacuum. The valve controls EGR flow from the exhaust to the intake manifold through an orifice with a PCM controlled pintle. During operation, the PCM controls pintle position by monitoring the pintle position feedback signal. The feedback signal can be monitored with a Tech 2 as “Actual EGR Pos.” “Actual EGR Pos.” should always be near the commanded EGR position (”Desired EGR Pos.”). If a problem with the EGR system will not allow the PCM to control the pintle position properly, DTC P1406 will set. The PCM also tests for EGR flow. If incorrect flow is detected, DTC P0401 will set. If DTCs P0401 and/or P1406 are set, refer to the DTC charts.

The linear EGR valve is usually activated under the following conditions:

- Warm engine operation.
- Above-idle speed.

Too much EGR flow at idle, cruise or cold operation may cause any of the following conditions to occur:

- Engine stalls after a cold start.
- Engine stalls at idle after deceleration.
- Vehicle surges during cruise.
- Rough idle.
- DTC P0300 (misfire detected).

Too little or no EGR flow may allow combustion temperatures to get too high. This could cause:

- Spark knock (detonation).
- Engine overheating.
- Emission test failure.
- DTC P0401 (EGR flow test).
- Poor fuel economy.

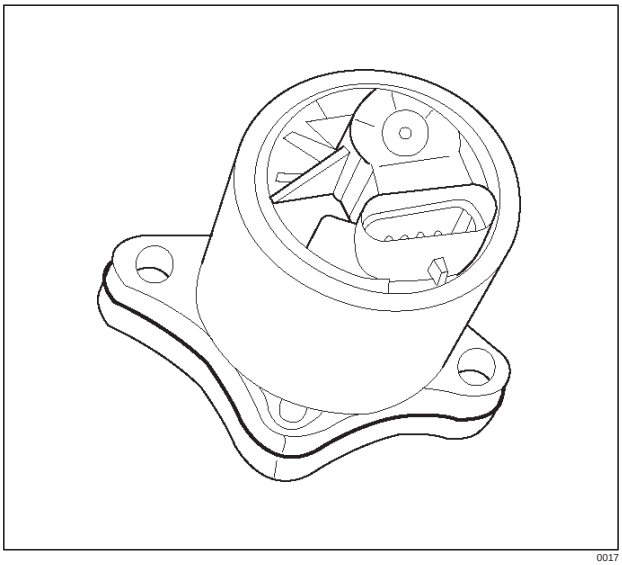

0017

EGR Pintle Position Sensor

The PCM monitors the EGR valve pintle position input to endure that the valve responds properly to commands from the PCM and to detect a fault if the pintle position sensor and control circuits are open or shorted. If the PCM detects a pintle position signal voltage outside the normal range of the pintle position sensor, or a signal voltage that is not within a tolerance considered acceptable for proper EGR system operation, the PCM will set DTC P1406.

General Description (Positive Crankcase Ventilation (PCV) System)

Crankcase Ventilation System Purpose

The crankcase ventilation system is use to consume crankcase vapors in the combustion process instead of venting them to the atmosphere. Fresh air from the throttle body is supplied to the crankcase and mixed with blow-by gases. This mixture is then passed through the positive crankcase ventilation (PCV) valve into the common chamber.

Crankcase Ventilation System Operation

The primary control is through the positive crankcase ventilation (PCV) valve. The PCV valve meters the flow at a rate that depends on the intake vacuum. The PCV valve restricts the flow when the inlet vacuum is highest. In

Downloaded from www.Manualslib.com manuals search engine

addition, the PCV valve can seal the common chamber off in case of sudden high pressure in the crankcase.

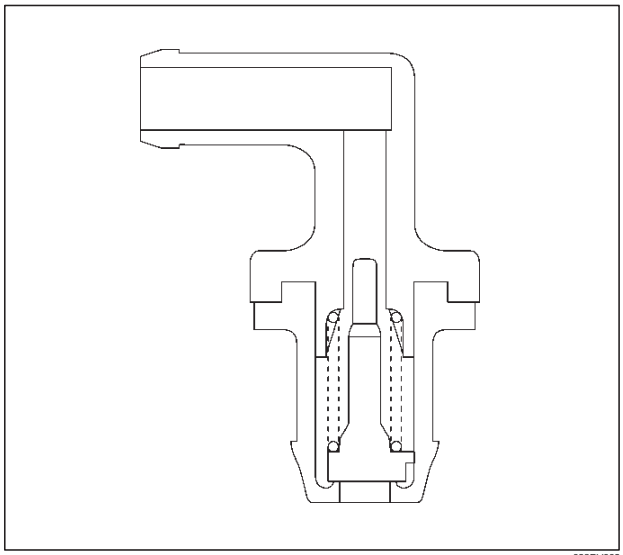

028RV002

While the engine is running, exhaust fuses and small amounts of the fuel/air mixture escape past the piston rings and enter the crankcase. These gases are mixed with clean air entering through a tube from the air intake duct.

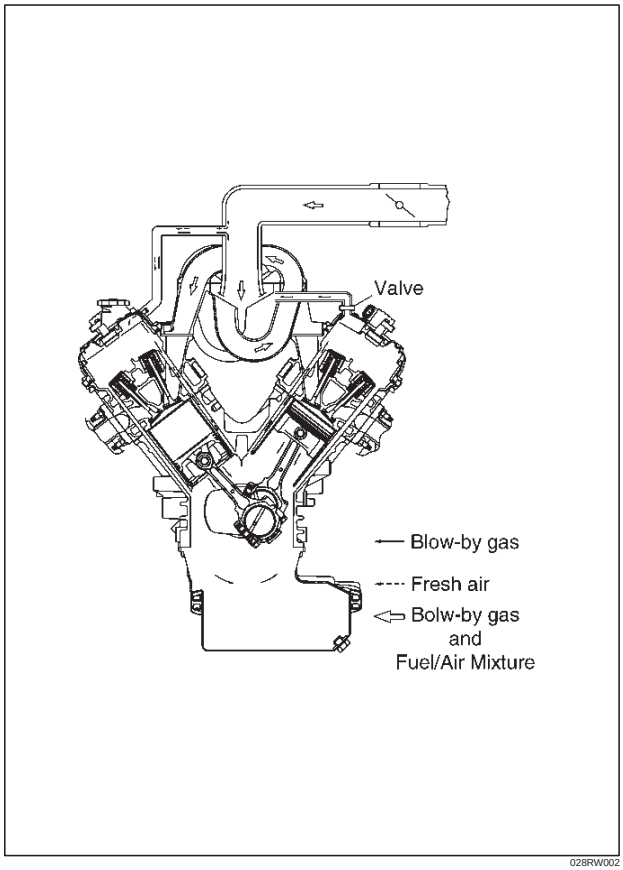

028RW002

During normal, part-throttle operation, the system is designed to allow crankcase gases to flow through the PCV valve into the throttle body to be consumed by normal combustion.

A plugged valve or PCV hose may cause the following conditions:

- Rough idle.
- Stalling of slow idle speed.
- Oil leaks.
- Sludge in the engine.

A leaking PCV hose would cause:

- Rough idle.
- Stalling.
- High idle speed.

Downloaded from www.Manualslib.com manuals search engine

Special Tools

ILLUSTRATION	**TOOL NO.** TOOL NAME
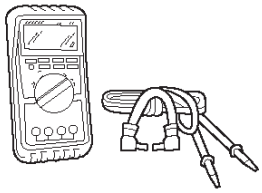	**J 39200** High Impedance Multimeter (Digital Voltmeter – DVM)
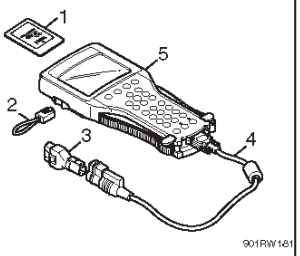	(1) PCMCIA Card (2) RS232 Loop Back Connector (3) SAE 16/19 Adapter (4) DLC Cable (5) TECH–2
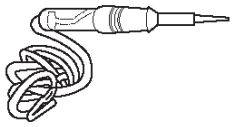	**J 34142-B** Unpowered Test Light
	Connector Test Adapter Kit J 35616-A/BT-8637
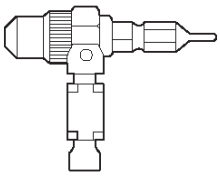	**J 26792/BT-7220-1** Spark Tester
	J 34730-E Port Fuel Injection Diagnostic Kit

ILLUSTRATION	**TOOL NO.** TOOL NAME
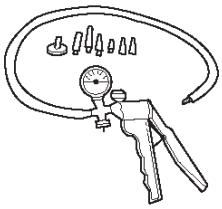	**J 23738-A** Vacuum Pump with Gauge
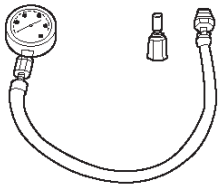	**BT-8515/8515V** Exhaust Back Pressure Tester
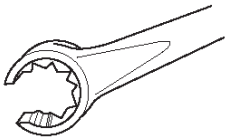	**J 39194-B** Heated Oxygen Sensor Wrench
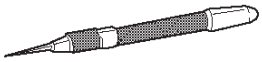	**J 35689-A** Terminal Remover
	J 28742-A Weather Pack II Terminal Remover
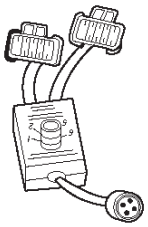	**J 39021-90** Injector Switch Box

Downloaded from www.Manualslib.com manuals search engine

ILLUSTRATION	**TOOL NO.** TOOL NAME
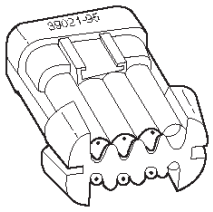	**J 39021-65** Injector Test Light
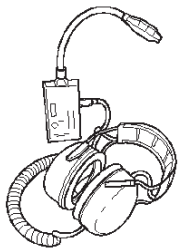	**J 41416**[2] Ultrasonic Leak Detector

1. J 41416 Ultrasonic Leak Detector is a microprocessor-based device used to detect leaks in the enhanced evaporative emission control system. The evaporative system is pressurized to 30 inches of water using the J 41413 EVAP Pressure/Purge Diagnostic System. Small leaks in the EVAP system will emit sound at a high frequency undetectable by a human ear but detectable with the J 41416. The technician traces along the evaporative system and can pinpoint leaks due to corroded lines, cracked hoses, or a damaged EVAP component. The detector includes a high quality set of headphones to block out surrounding shop noise and the LED sensitivity meter allows a visual reference for locating leaks in conjunction with the audio output heard through the headphones. Powered by (1) nine volt battery.

Downloaded from www.Manualslib.com manuals search engine

TROOPER

ENGINE

ENGINE EXHAUST

CONTENTS

General Description 6F–2
Front Exhaust Pipe 6F–3
Front Exhaust Pipe and Associated Parts . 6F–3
Removal 6F–3
Installation 6F–3
Three Way Catalytic Converter LH 6F–4
Removal 6F–4
Installation 6F–4
Three Way Catalytic Converter RH 6F–5
Removal 6F–5
Installation 6F–5
Exhaust Silencer 6F–6
Exhaust Silencer and Associated Parts . . . 6F–6
Removal 6F–6
Installation 6F–6
Rear Exhaust pipe 6F–7
Rear Exhaust pipe and Associated Parts . 6F–7
Removal 6F–7
Installation 6F–7
Main Data and Specifications 6F–8

Downloaded from www.Manualslib.com manuals search engine

General Description

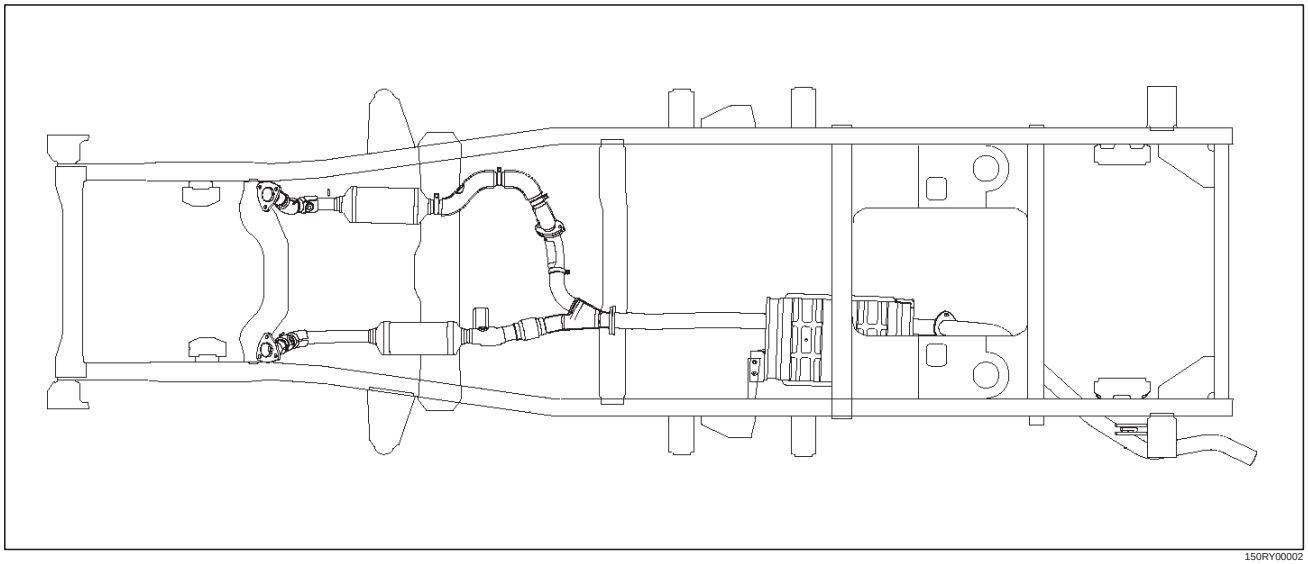

150RY00002

When inspecting or replacing exhaust system components, make sure there is adequate clearance from all points on the underbody to prevent overheating the floor pan and possible damage to the passenger compartment insulation and trim materials.

Check complete exhaust system and nearby body areas and rear compartment lid for broken, damaged, missing or mispositioned parts, open seams, holes, loose connections or other deterioration which could permit exhaust fumes to seep into the rear compartment or passenger compartment. Dust or water in the rear compartment may be an indication of a problem in one of these areas. Any faulty areas should be corrected immediately.

Hangers

Various types of hangers are used to support exhaust system(s). These include conventional rubber straps, rubber rings, and rubber blocks.

The installation of exhaust system supports is very important, as improperly installed supports can cause annoying vibrations which can be difficult to diagnose.

Three Way Catalytic Converter

The three way catalytic converter is an emission control device added to the exhaust system to reduce pollutants from the exhaust gas stream.

CAUTION: The catalytic converter requires the use of unleaded fuel only.

Periodic maintenance of the exhaust system is not required. If the vehicle is raised for other service, it is advisable to check the condition of the complete exhaust system.

A dual bed monolith catalytic converter is used in combination with three way catalytic converter.

Catalytic Types:

Three way (Reduction/Oxidation) catalyst

The catalyst coating on the three way (reduction) converter contains platinum and rhodium which lowers the levels of nitrous oxide (NOx) as well as hydrocarbons (HC) and carbon monoxide (Co).

Gasket

The gasket must be replaced whenever a new exhaust pipe, muffler or catalytic converter is installed.

Downloaded from www.Manualslib.com manuals search engine

Front Exhaust Pipe

Front Exhaust Pipe and Associated Parts

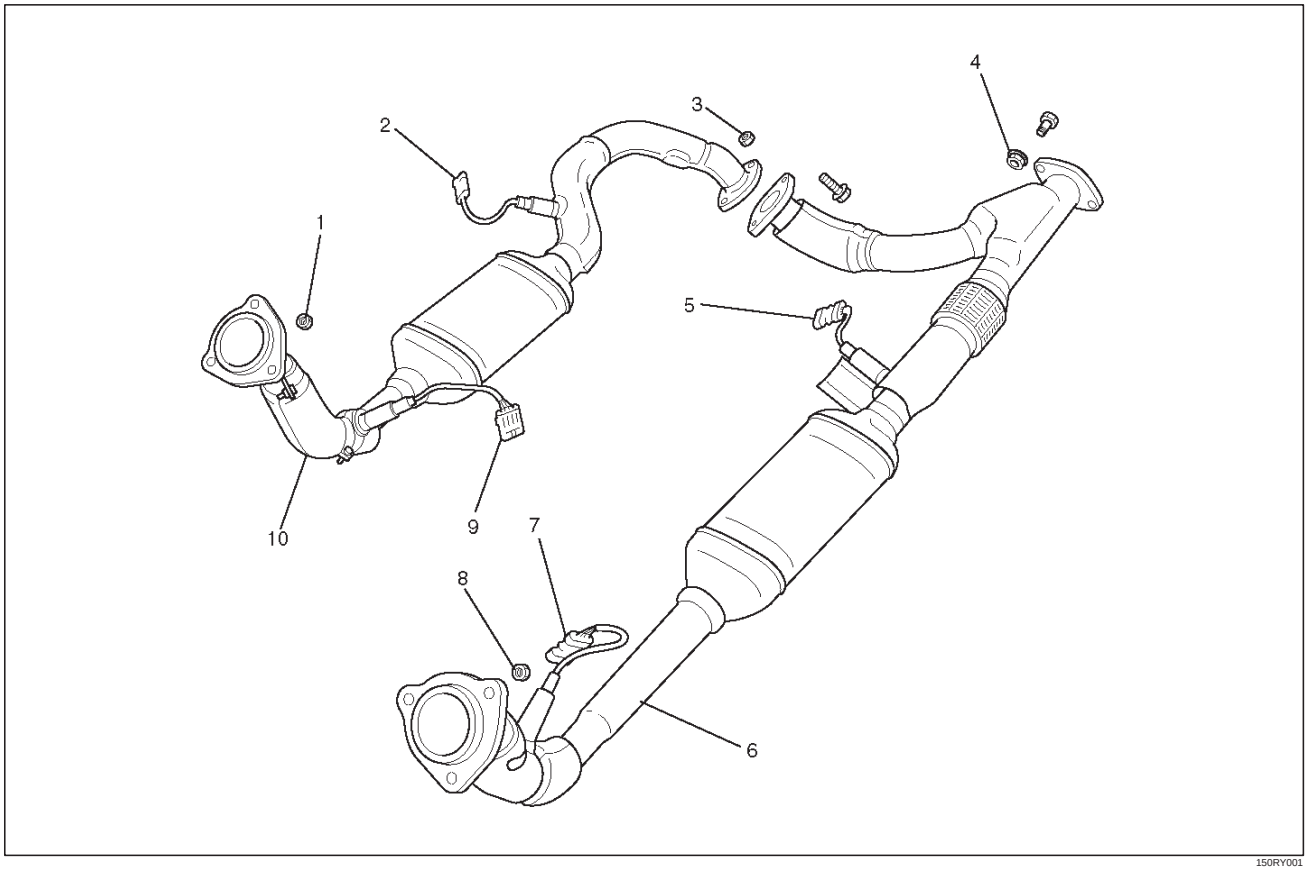

Legend

(1) Front Exhaust Pipe RH Fixing Nuts
(2) O_2 Sensor Terminal Connector
(3) Front Exhaust Pipe RH Fixing Bolts and Nuts
(4) Front Exhaust Pipe Fixing Bolts and Nuts
(5) O_2 Sensor Terminal Connector
(6) Front Exhaust Pipe LH
(7) O_2 Sensor Terminal Connector
(8) Front Exhaust Pipe LH Fixing Nuts
(9) O_2 Sensor Terminal Connector
(10) Front Exhaust Pipe RH

Removal

1. Disconnect battery ground cable.
2. Raise the vehicle and support with suitable safety stands.
3. Disconnect O_2 sensor harness connector (2)(5)(7)(9).
4. Remove front exhaust pipe fixing nuts (3)(4).
5. Remove front exhaust pipe fixing three stud nuts from exhaust manifold (1)(8).
6. Remove front exhaust pipe (6)(10).

Installation

1. Install front exhaust pipe (10)(6) and tighten three stud nuts (1)(8) and two nuts (3)(4) to the specified torque.

   Torque

   Stud Nuts : 67 N·m (49 lb ft)

   Nuts : 43 N·m (32 lb ft)
2. Reconnect O_2 sensor harness connector (2)(5)(7)(9).

Downloaded from www.Manualslib.com manuals search engine

Three Way Catalytic Converter LH

Removal

1. Disconnect battery ground cable.
2. Raise the vehicle and support with suitable safety stands.
3. Disconnect front O_2 sensor harness connector and rear O_2 sensor harness connector (2)(3).
4. Remove exhaust front pipe fixing three stud nuts (1) from exhaust manifold side and two nuts (4)(5) from rear end of exhaust front pipe (6).

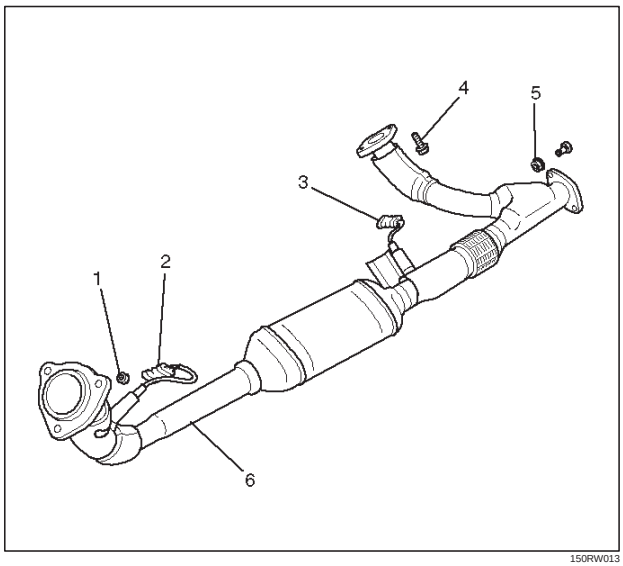

150RW013

Legend

(1) Front Exhaust Pipe Fixing Three Stud Nuts
(2) O_2 Sensor Harness Connector
(3) O_2 Sensor Harness Connector
(4) Front Exhaust Pipe RH Fixing Bolts and Nuts
(5) Front Exhaust Pipe Fixing Bolts and Nuts
(6) Front Exhaust Pipe LH

Installation

1. Install exhaust front pipe (6) and tighten three studs nuts (1) and two nuts (4)(5) to the specified torque.

   Torque

   Stud nuts : 67 N·m (49 lb ft)

   Nuts : 43 N·m (32 lb ft)
2. Reconnect O_2 sensor harness connector (2)(3).

Downloaded from www.Manualslib.com manuals search engine

Three Way Catalytic Converter RH

Removal

1. Disconnect battery ground cable.
2. Raise the vehicle and support with suitable safety stands.
3. Remove torsion bar. Refer to removal procedure in Front Suspension section.
4. Disconnect front O_2 sensor harness connector (4) and rear O_2 sensor harness connector (2).
5. Remove front exhaust pipe fixing nuts (3).
6. Remove three stud nuts (1) from exhaust manifold then remove the exhaust front pipe (5).

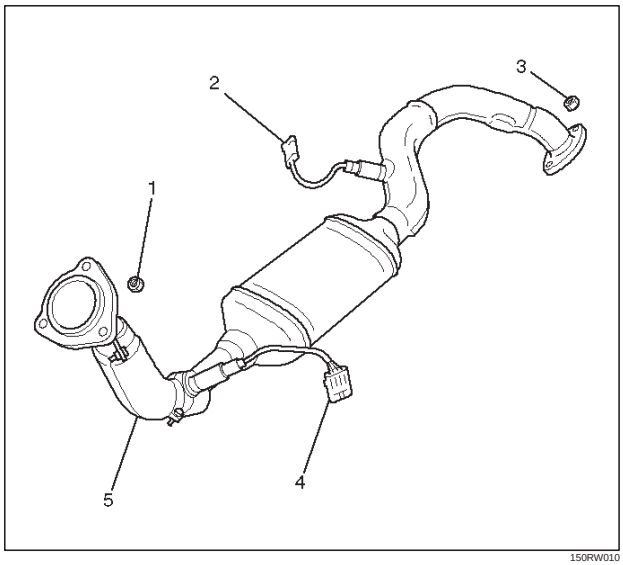

150RW010

Legend

(1) Front Exhaust Pipe Fixing Three Stud Nuts
(2) O_2 Sensor Harness Connector
(3) Front Exhaust Pipe Fixing Bolts and Nuts
(4) O_2 Sensor Harness Connector
(5) Front Exhaust Pipe

Installation

1. Install front exhaust pipe (5) and tighten three stud nuts (1) and two nuts (3) to the specified torque.

   Torque

   Stud nuts : 67 N·m (49 lb ft)

   Nuts : 43 N·m (32 lb ft)

2. Install the torsion bar and readjust the vehicle height. Refer to the installation and vehicle height adjustment instructions in the Front Suspension Section.

Downloaded from www.Manualslib.com manuals search engine

Exhaust Silencer

Exhaust Silencer and Associated Parts

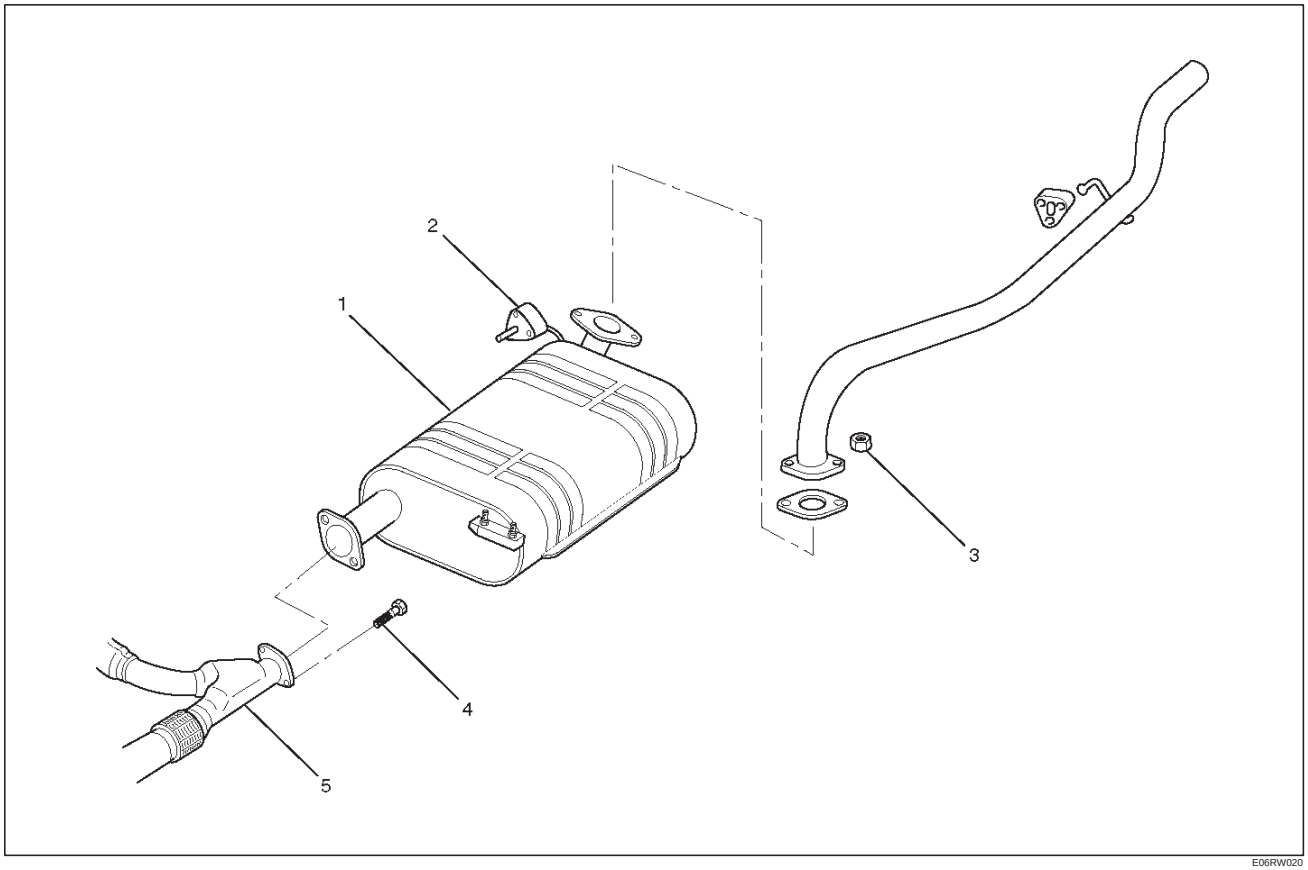

E06RW020

Legend

(1) Exhaust Silencer
(2) Mounting Rubber
(3) Exhaust Silencer Fixing Nuts
(4) Exhaust Silencer Fixing Bolts
(5) Exhaust Front Pipe

Removal

1. Disconnect battery ground cable.
2. Raise the vehicle and support with suitable safety stands.
3. Remove exhaust silencer fixing nuts (3) then disconnect rear exhaust pipe from exhaust silencer.
4. Remove exhaust silencer fixing bolts (4) then disconnect exhaust silencer from front exhaust pipe (5).
5. Remove exhaust silencer mounting nuts from chassis side then remove exhaust silencer (1).

Installation

1. Install the exhaust silencer (1) chassis side and tighten four nuts to the specified torque.

   Nuts: 16 N·m (12 lb ft)

2. Install the exhaust silencer and tighten two bolts (4) on front exhaust pipe to specified torque.

   Bolts: 43 N·m (32 lb ft)

3. Install the rear exhaust pipe and tighten on exhaust silencer to specified torque.

   Nuts: 43 N·m (32 lb ft)

Downloaded from www.Manualslib.com manuals search engine

Rear Exhaust pipe

Rear Exhaust pipe and Associated Parts

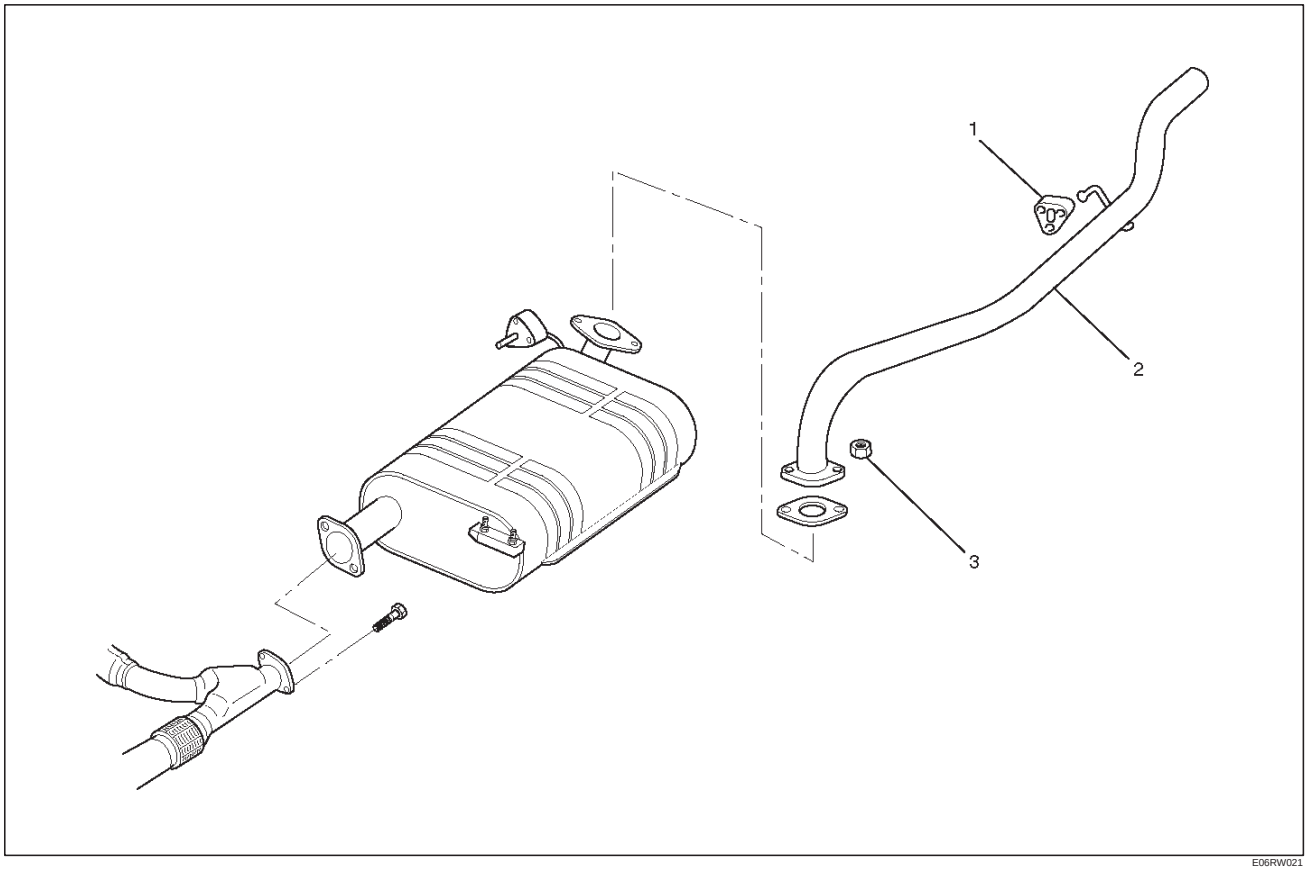

E06RW021

Legend

(1) Mounting Rubber
(2) Rear Exhaust Pipe
(3) Rear Exhaust Pipe Fixing Nuts

Removal

1. Disconnect battery ground cable.
2. Raise the vehicle and support with suitable safety stands.
3. Remove rear exhaust pipe fixing nuts (3), then disconnect rear exhaust pipe from exhaust silencer.
4. Remove mounting rubber (1).
5. Remove rear exhaust pipe (2).

Installation

1. Install the mounting rubber (1).
2. Install the exhaust pipe (2) and tighten two nuts (3) on exhaust silencer to specified torque.

Nuts: 43 N·m (32 lb ft)

Downloaded from www.Manualslib.com manuals search engine

Main Data and Specifications

Torque Specifications

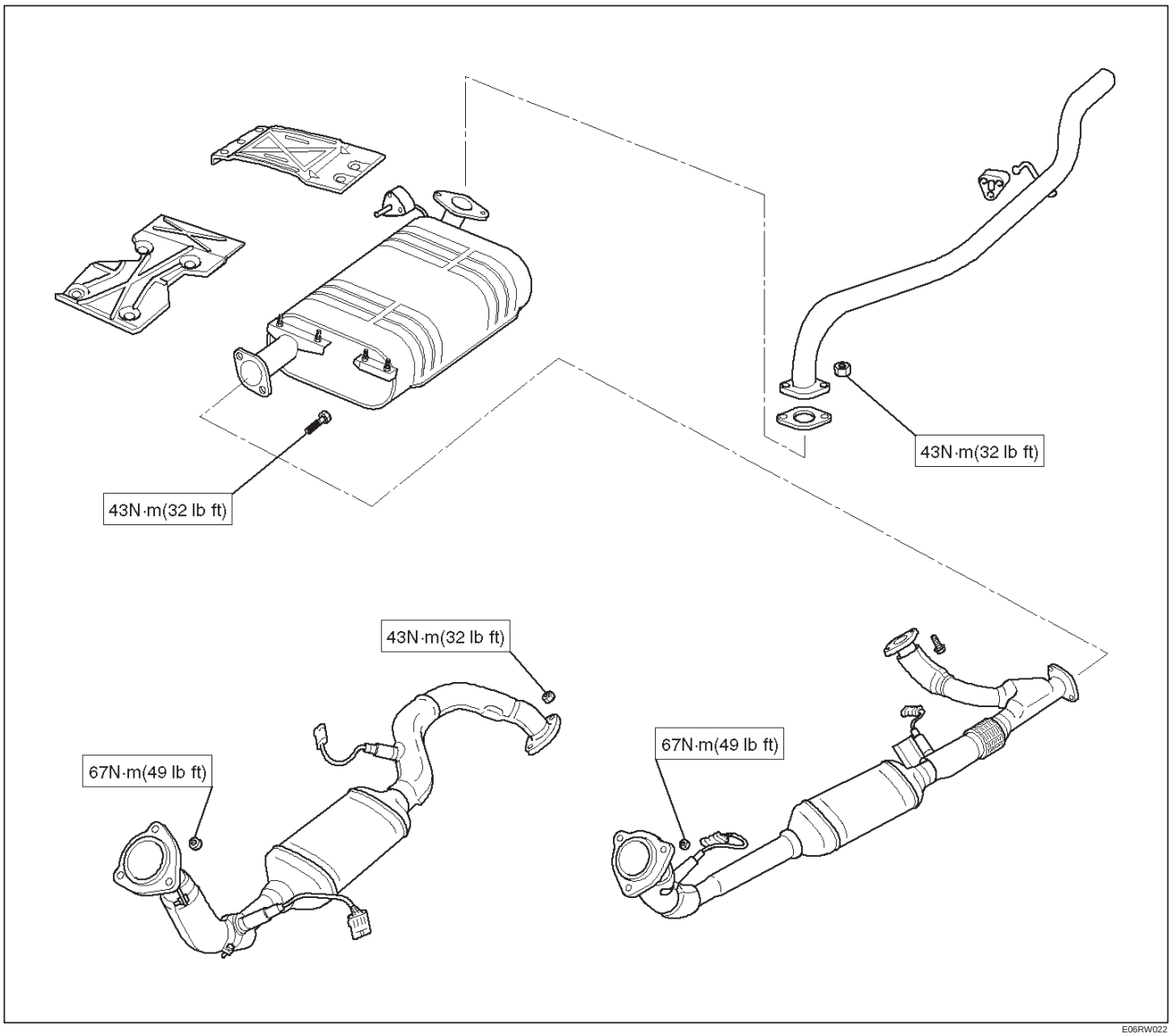

E06RW022

Downloaded from www.Manualslib.com manuals search engine

TROOPER

ENGINE

ENGINE LUBRICATION

CONTENTS

Service Precaution 6G–1
General Description 6G–2
Oil Pump 6G–3
Oil Pump and Associated Parts 6G–3
Disassembly 6G–3
Inspection and Repair 6G–4
Reassembly 6G–5
Oil Pan and Crankcase 6G–7
Removal 6G–7
Installation 6G–7
Oil Pump 6G–10
Removal 6G–10
Installation 6G–10
Oil Pump Oil Seal 6G–12
Removal 6G–12
Installation 6G–12
Oil Filter 6G–13
Removal 6G–13
Installation 6G–13
Main Data and Specification 6G–14

Service Precaution

WARNING: THIS VEHICLE HAS A SUPPLEMENTAL RESTRAINT SYSTEM (SRS). REFER TO THE SRS COMPONENT AND WIRING LOCATION VIEW IN ORDER TO DETERMINE WHETHER YOU ARE PERFORMING SERVICE ON OR NEAR THE SRS COMPONENTS OR THE SRS WIRING. WHEN YOU ARE PERFORMING SERVICE ON OR NEAR THE SRS COMPONENTS OR THE SRS WIRING, REFER TO THE SRS SERVICE INFORMATION. FAILURE TO FOLLOW WARNINGS COULD RESULT IN POSSIBLE AIR BAG DEPLOYMENT, PERSONAL INJURY, OR OTHERWISE UNNEEDED SRS SYSTEM REPAIRS.

CAUTION: Always use the correct fastener in the proper location. When you replace a fastener, use ONLY the exact part number for that application. ISUZU will call out those fasteners that require a replacement after removal. ISUZU will also call out the fasteners that require thread lockers or thread sealant. UNLESS OTHERWISE SPECIFIED, do not use supplemental coatings (Paints, greases, or other corrosion inhibitors) on threaded fasteners or fastener joint interfaces. Generally, such coatings adversely affect the fastener torque and the joint clamping force, and may damage the fastener. When you install fasteners, use the correct tightening sequence and specifications. Following these instructions can help you avoid damage to parts and systems.

Downloaded from www.Manualslib.com manuals search engine

General Description

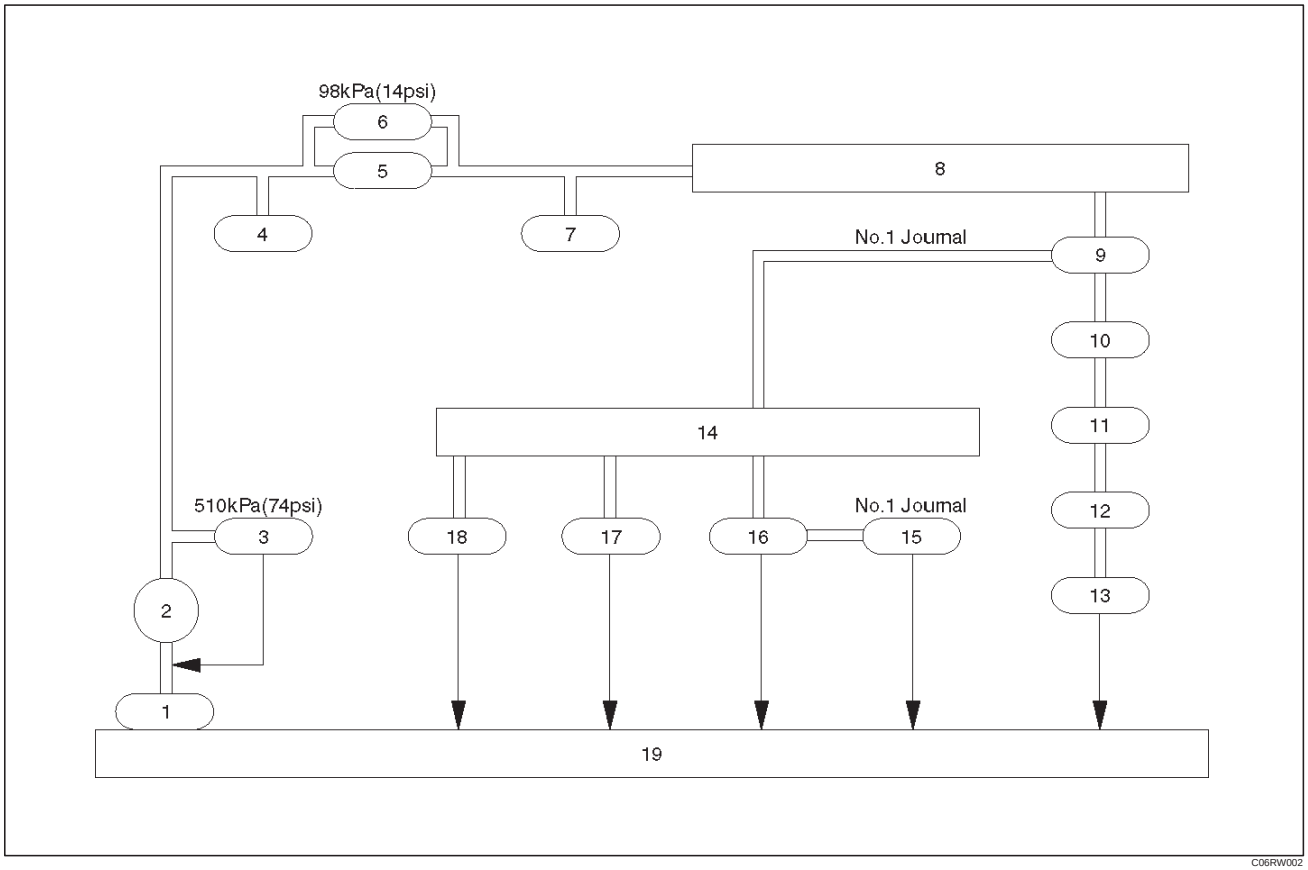

Legend

(1) Oil Strainer
(2) Oil Pump
(3) Relief Valve
(4) Oil Pressure Switch
(5) Oil Filter
(6) Safety Valve
(7) Oil Pressure Unit
(8) Oil Gallery
(9) Crankshaft Bearing
(10) Crankshaft
(11) Connecting Rod Bearing
(12) Connecting Rod
(13) Piston
(14) Oil Gallery; Cylinder Head
(15) Camshaft
(16) Camshaft Journal
(17) Front Journal; Camshaft Drive Gear
(18) Rear Journal; Camshaft Drive Gear
(19) Oil Pan

Downloaded from www.Manualslib.com manuals search engine

Oil Pump

Oil Pump and Associated Parts

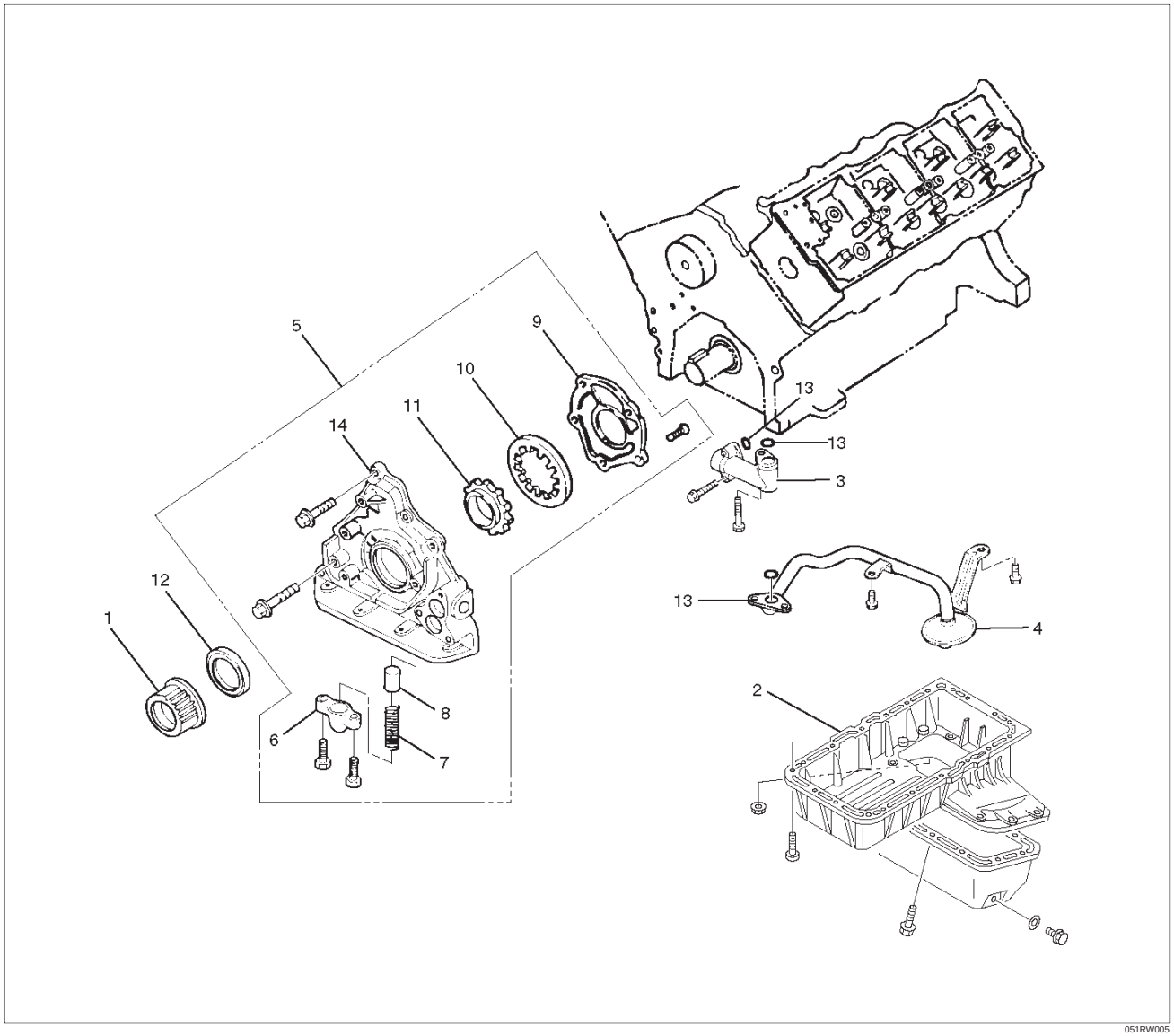

051RW005

Legend

(1) Crankshaft Timing Pulley
(2) Crankcase with Oil Pan
(3) Oil Pipe
(4) Oil Strainer
(5) Oil Pump Assembly
(6) Plug
(7) Spring
(8) Relief Valve
(9) Oil Pump Cover
(10) Driven Gear
(11) Drive Gear
(12) Oil Seal
(13) O-ring
(14) Oil Pump Body

Disassembly

1. Remove crankshaft timing pulley.
2. Remove crankcase with oil pan.
3. Remove oil pipe.
4. Remove oil strainer.
5. Remove oil pump assembly.
6. Remove plug.
7. Remove spring.
8. Remove relief valve.
9. Remove oil pump cover.
10. Remove driven gear.

Downloaded from www.Manualslib.com manuals search engine

11. Remove drive gear.
12. Remove oil seal.
13. Remove O-ring.

Inspection and Repair

CAUTION: Make necessary correction or parts replacement if wear, damage or any other abnormal conditions are found during inspection.

Relief Valve (8)

- Check to see that the relief valve slides freely.
- The oil pump must be replaced if the relief valve does not slide freely.
- Replace the spring and/or the oil pump assembly (5) if the spring is damaged or badly worn.

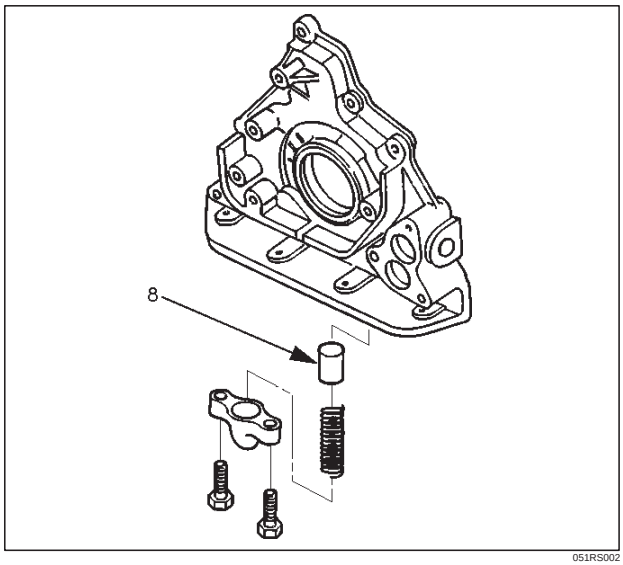

051RS002

Body (14) and Gears (10, 11)

The pump assembly must be replaced if one or more of the conditions below is discovered during inspection.

- Badly worn or damaged driven gear (10).
- Badly worn drive gear (11) driving face.
- Badly scratched or scored body sliding face (14) or driven gear (10).
- Badly worn or damaged gear teeth.

Measure the clearance between the body and the driven gear with a feeler gauge.

Standard : 0.10 mm–0.18 mm (0.0039 in.–0.0070 in)

Limit : 0.20mm (0.0079 in)

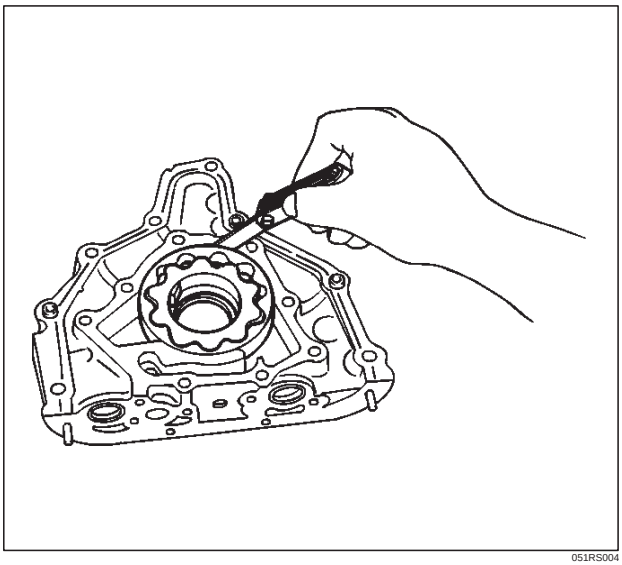

051RS004

- Measure the clearance between the drive gear and driven gear with a feeler gauge.

Standard : 0.11 mm–0.24 mm (0.0043 in–0.0094 in)

Limit : 0.35mm (0.0138 in)

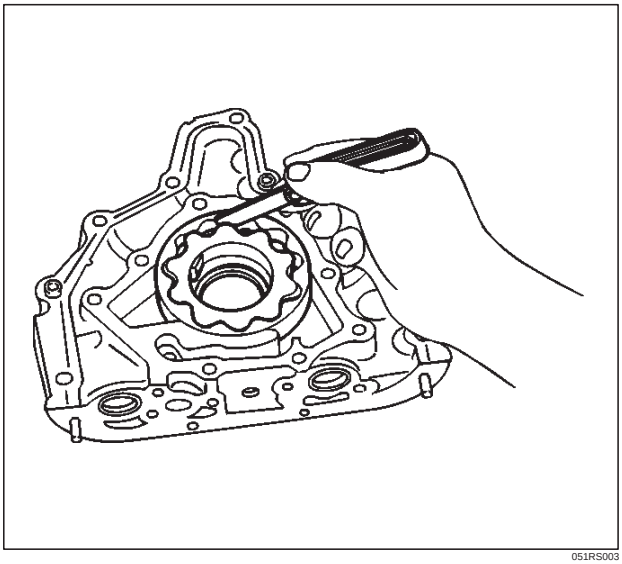

051RS003

- Measure the side clearance with a precision straight edge and a feeler gauge.

Clearance

Standard : 0.03 mm–0.09 mm (0.0011 in–0.0035 in)

Limit : 0.15mm (0.0059 in)

Downloaded from www.Manualslib.com manuals search engine

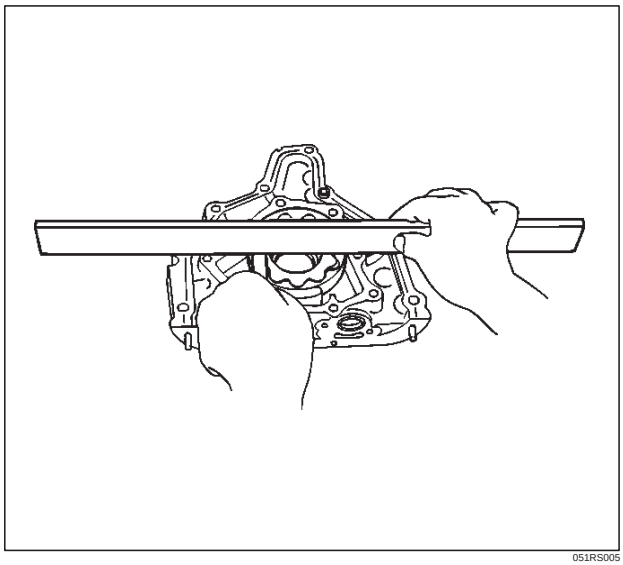

051RS005

Oil Strainer

Check the oil strainer for cracking and scoring. If cracking and scoring are found, the oil strainer must be replaced.

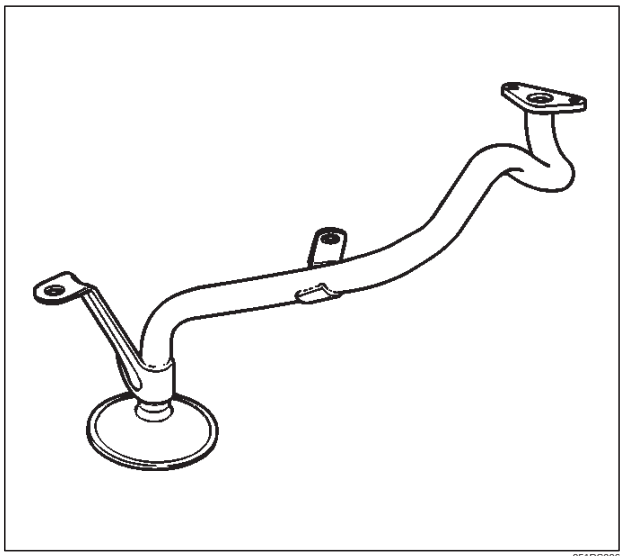

051RS006

Reassembly

1. Install drive gear (11).
2. Install driven gear (10).
3. Install oil pump cover (9) and first, loosely tighten all of the attaching screws. Next, tighten the attaching screws to the specified torque.

   Torque : 10 N·m (89 lb in)

   After installation, check that the gear rotates smoothly.
4. Install relief valve (8) and apply engine oil to the relief valve and spring (7).
5. Install spring (7).
6. Install the plug (6).

   Torque : 8 N·m (69 lb in)

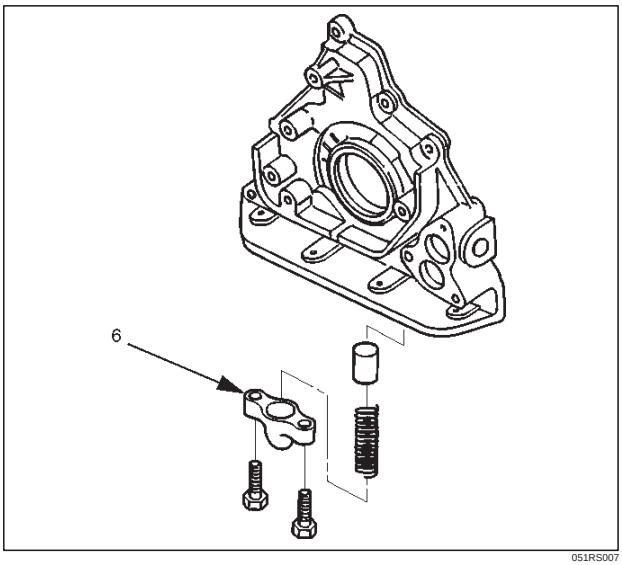

051RS007

7. Install oil pump assembly (5).
   - Carefully remove any oil from the cylinder body and the pump. Apply sealant (TB–1207B or equivalent) to the pump fitting face as shown in illustration. Take care that sealant is not applied to oil port surfaces. The oil pump assembly must be installed within 5 minutes after sealant application before the sealant hardens.

CAUTION: Do not apply an excessive amount of sealant to the contact surface. Applying too much sealant will overflow the contact surfaces. This could cause serious damage to the engine.

- **Attach oil pump assembly to cylinder body.**
- **Tighten the oil pump fixing bolts.**

  Torque : 25 N·m (18 lb·ft)

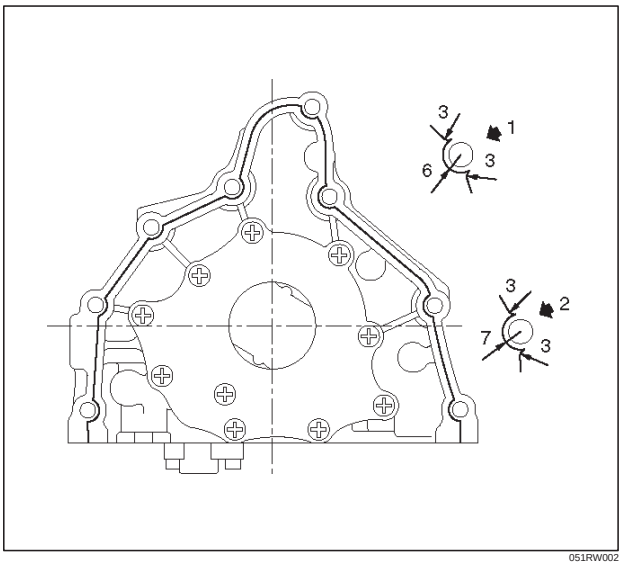

051RW002

Downloaded from www.Manualslib.com manuals search engine

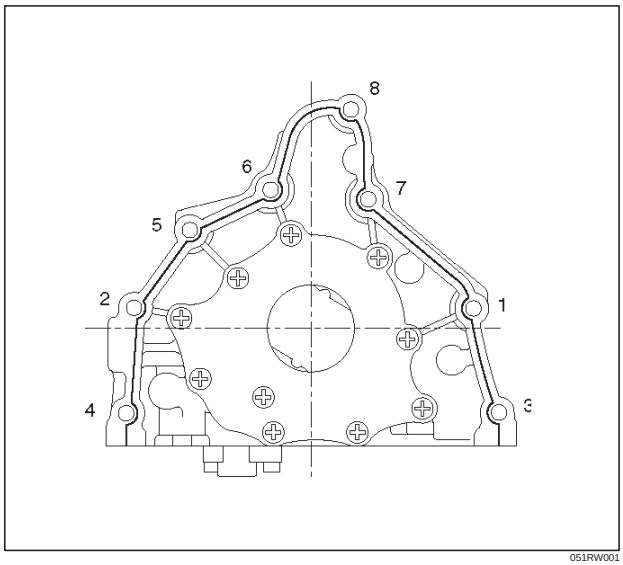

051RW001

Legend

(1) Around Bolt Holes
(2) Around Dowel Pin

8. Install the new oil seal (12). Apply engine oil to the oil seal lip before installation then use J–39202 oil seal Installer, install oil seal.

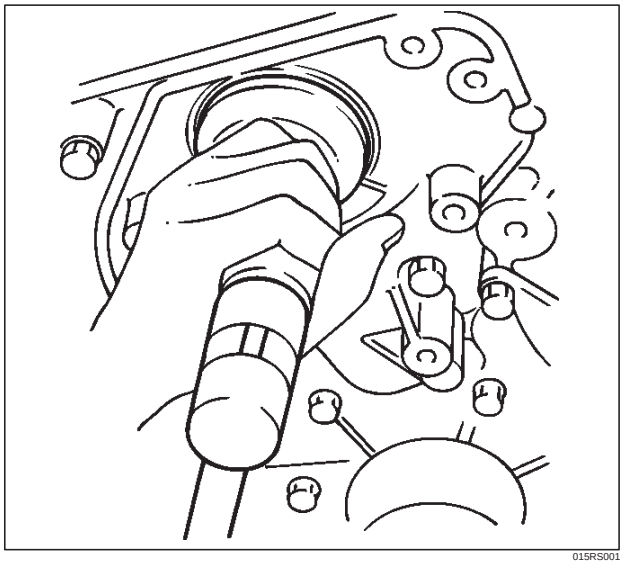

015RS001

9. Install oil strainer (4) with O-ring (13).

   Torque: 25 N·m (18 lb ft)

10. Install oil pipe (3) with O-ring (13).

    Torque: 25 N·m (18 lb ft)

11. Install crankcase with oil pan (2).
    - Remove oil on crankcase mounting surface and dry the surface.
    - Apply a proper 4.5 mm (0.7 in) wide bead of sealant (TB1207C or equivalent) to the crankcase mounting surface. The bead must be continuous.
    - The crankcase must be installed within 5 minutes after sealant application before the sealant hardens.
    - Tighten fixing bolts to the specified torque.

    Torque : 10 N·m (89 lb in)

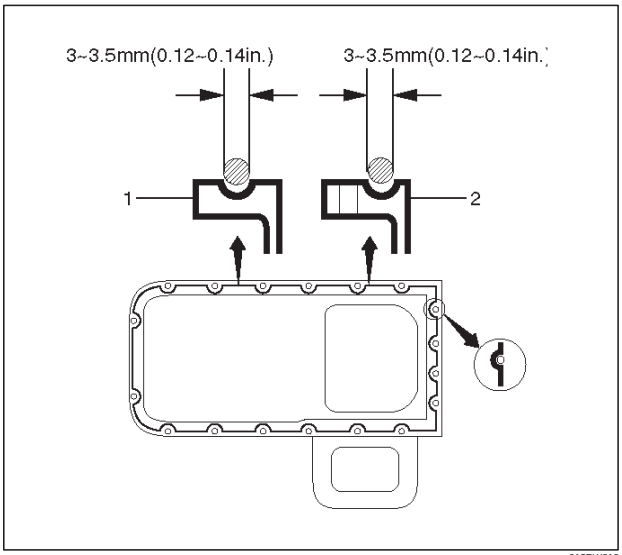

013RW010

12. Install crankshaft timing pulley.

Downloaded from www.Manualslib.com manuals search engine

Oil Pan and Crankcase

Removal

1. Disconnect battery ground cable.
2. Lift vehicle by supporting the frame.
3. Remove under cover.
4. Drain engine oil.
5. Remove front wheels.
6. Remove oil level dipstick from level gauge tube.
7. Remove radiator under fan shroud.
8. Remove suspension cross member fixing bolts, 2 pcs each per side and remove suspension cross member.
9. Remove pitman arm and relay lever assembly, using the J-29107 remover, remove pitman arm from the steering unit and remove four fixing bolts for relay lever assembly.
10. Remove axle housing assembly four fixing bolts from housing isolator side and mounting bolts from wheel side. At this time support the axle with a garage jack and remove axle housing assembly. (For 4×4)
11. Remove starter fixing bolts.
12. Remove oil pan fixing bolts.
13. Remove oil pan, using J-37228 sealer cutter, remove oil pan.

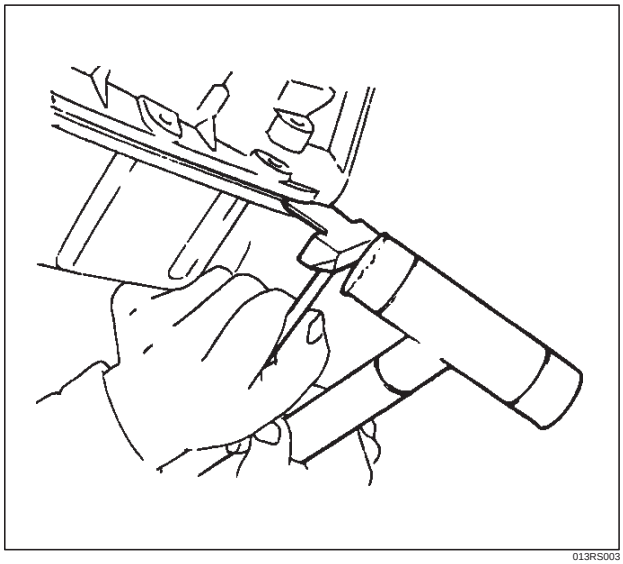

013RS003

14. Remove crankcase fixing bolts.
15. Remove crankcase, using J-37228 sealer cutter, remove crankcase.

NOTE: Do not deform or damage the flange of oil pan and crankcase.

Replace the oil pan and/or crankcase if deformed or damaged.

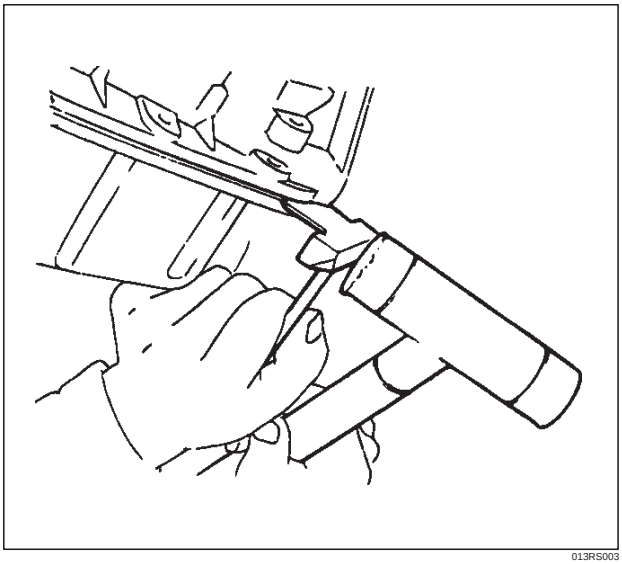

013RS003

Installation

1. Install crankcase.
   A. Remove residual sealant, lubricant and moisture from mounting surface, then dry thoroughly.
   B. Properly apply a 4.5 mm (0.7 in) wide bead of sealant (TB-1207C or equivalent) to mounting surface of crankcase.

   Sealant beat must be continuous.

   - The crankcase must be installed within 5 minutes after sealant application before the sealant hardens.

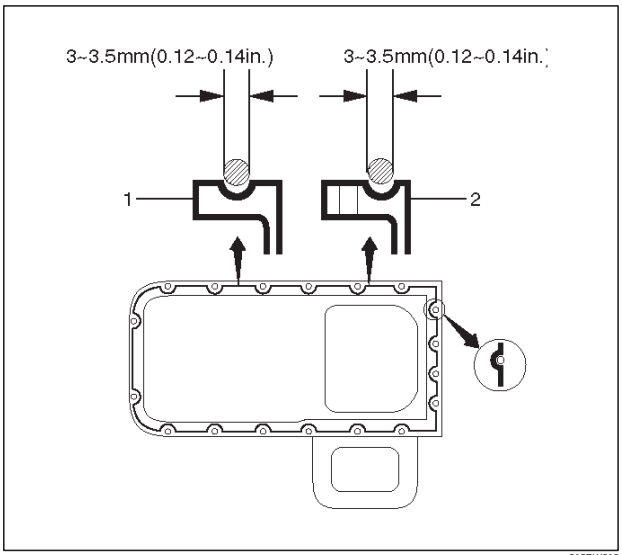

013RW010

Downloaded from www.Manualslib.com manuals search engine

C. Install crankcase, tighten crankcase fixing bolts to the specified torque.

Torque : 10 N·m (89 lb in)

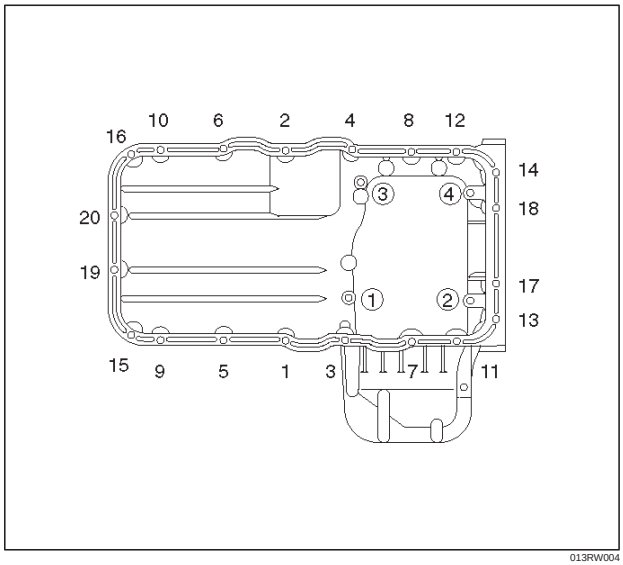

013RW004

2. Install oil pan
   1. Remove residual sealant, lubricant and moisture from mounting surface, then dry thoroughly.
   2. Properly apply a 4.5 mm (07 in) wide bead of sealant (TB-1207C or equivalent) to mounting surface of oil pan.

      Sealant beat must be continuous.

      - The crankcase must be installed within 5 minutes after sealant application befor the sealant hardens.

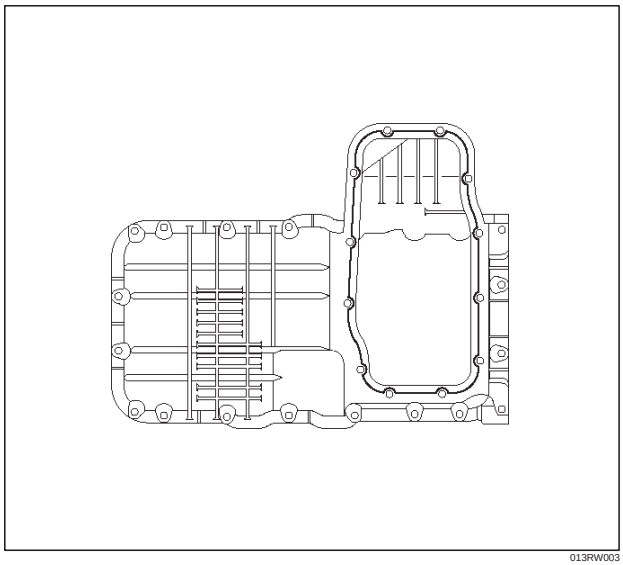

013RW003

   3. Install oil pan, tighten oil pan fixing bolts to the specified torque.

Torque : 25 N·m (18 lb ft)

3. Install starter and tighten fixing bolts.

Torque: 40 N·m (30 lb ft)

4. Install axle housing assembly and tighten fixing bolts to the specified torque. (For 4×4)

Axle case bolts

Torque : 82 N·m (60 lb ft)

Mounting bolts

Torque : 152 N·m (112 lb ft)

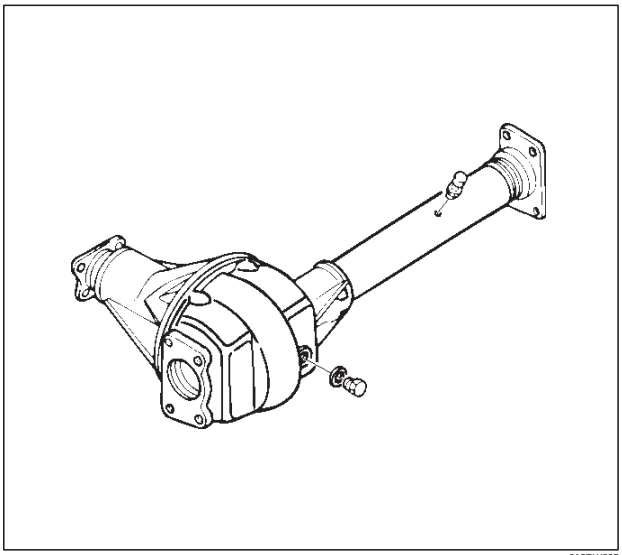

013RW005

5. Install relay lever assembly and tighten fixing bolts.

Torque: 44 N·m (32 lb ft)

6. Engage teeth of pitman arm and steering unit, and tighten nut to the specified torque.

Torque : 216 N·m (159 lb ft)

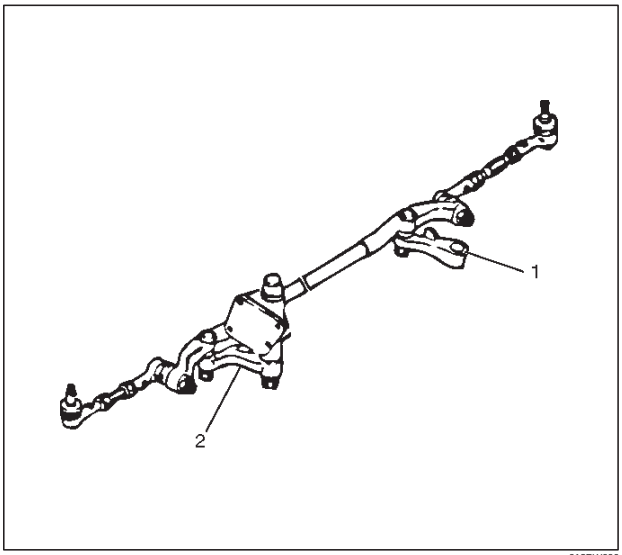

013RW006

Legend

(1) Pitman Arm

(2) Relay Lever

Downloaded from www.Manualslib.com manuals search engine

7. Install suspension cross member and tighten fixing bolts to the specified torque.

Torque : 78 N·m (58 lb ft)

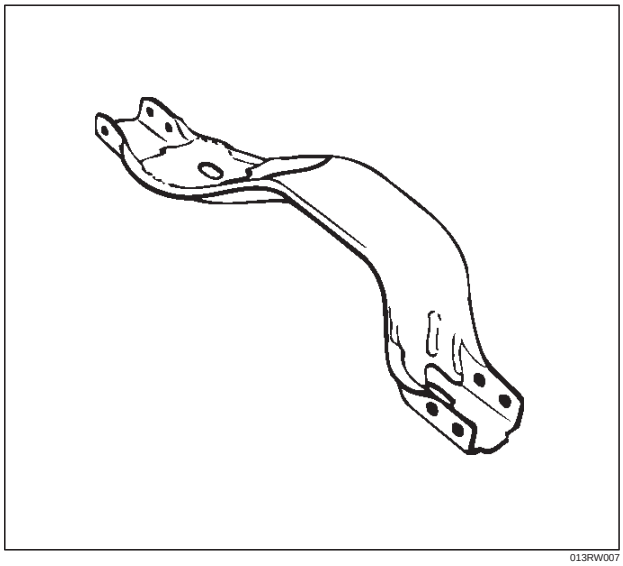

8. Install radiator under fan shroud.
9. Install under cover.
10. Install engine oil level dipstick.
11. Fill engine oil until full level on engine oil gauge dipstick.

Downloaded from www.Manualslib.com manuals search engine

Oil Pump

Removal

1. Disconnect battery ground cable.
2. Drain engine oil.
3. Remove crankcase assembly.
   - Refer to removal procedure for Oil Pan and Crankcase in this manual.
4. Remove crankshaft pulley.
   - Refer to removal procedure for Crankshaft Pulley in this manual.
5. Remove timing belt.
   - Refer to removal procedure for Timing Belt in this manual.
6. Remove timing pulley from crankshaft.
7. Remove four fixing bolts from oil filter assembly.
8. Remove oil strainer fixing bolts, remove oil strainer assembly with O-ring.
9. Remove three bolts from oil pipe and O-ring.
10. Remove eight oil pump fixing bolts, then oil pump assembly.
11. Remove sealant from mounting surface of oil pump assembly, cylinder block and take care not to damage mounting surfaces of oil pump and cylinder block.

Installation

1. Install oil pump assembly
   - Apply sealant (TB-1207B or equivalent) to the oil pump mounting surfaces as shown in the illustration.
   - The oil pump assembly must be installed within 5 minutes after sealant application before the sealant hardens.

NOTE: Do not apply sealant to the oil ports.

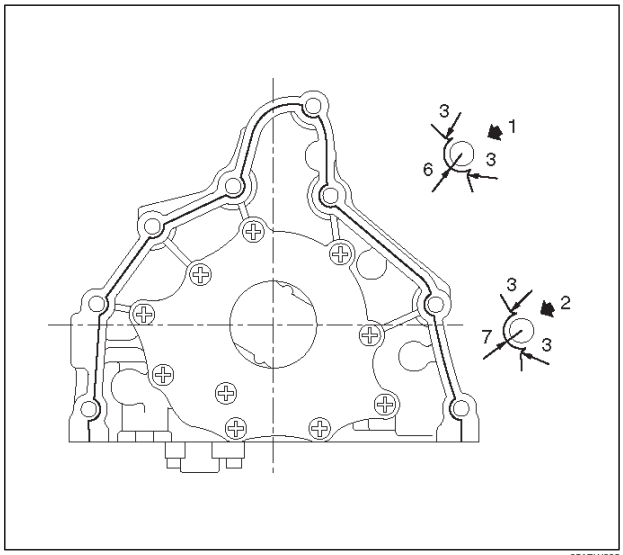

051RW002

- Use J-39202 installer when installing new oil seal.
- Apply engine oil to oil seal lip.
- Install oil pump assembly to the cylinder block.

NOTE: Do not damage oil seal during installation of oil pump assembly.

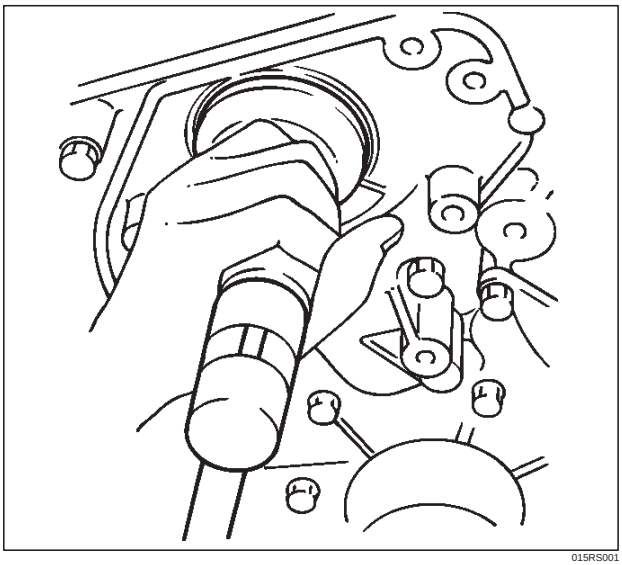

015RS001

- Tighten fixing bolts to the specified torque.

Torque : 25 N·m (18 lb ft)

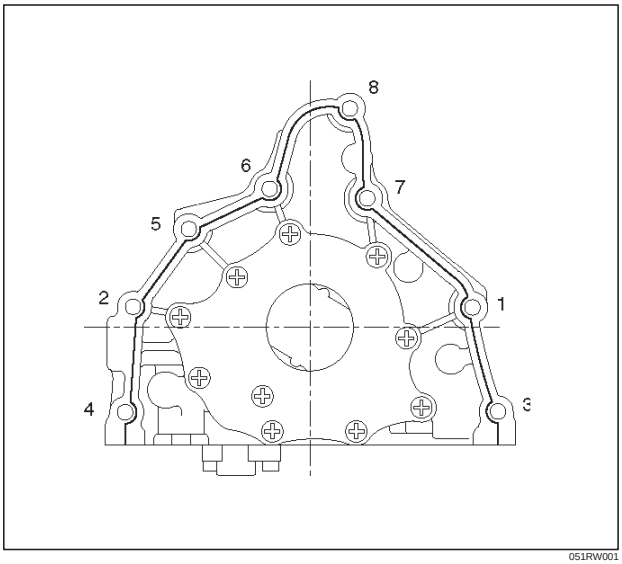

051RW001

2. Install oil pipe with O-ring, tighten fixing bolt to the specified torque.

   Torque : 10 N·m (89 lb in)

3. Install oil strainer with O-ring, tighten fixing bolt to the specified torque.

   Torque : 25 N·m (18 lb ft)

Downloaded from www.Manualslib.com manuals search engine

4. Install oil filter assembly and tighten bolts to the specified torque.

   Torque : 25 N·m (18 lb ft)

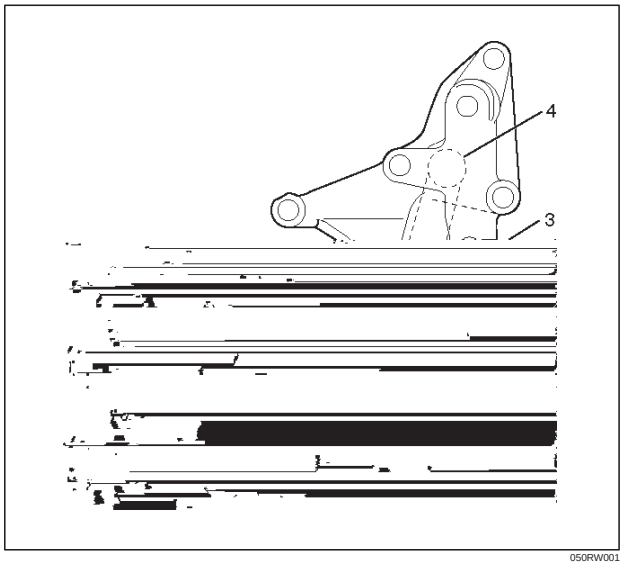

050RW001

Legend

(1) Oil Pump
(2) Oil Filter
(3) Oil Gallery
(4) From Oil Filter
(5) To Oil Filter

5. Install timing pulley on crankshaft.
   Install timing belt.
   - Refer to installation procedure for Timing Belt in this manual.
6. Install crankshaft pulley.
   - Refer to install procedure for Crankshaft Pulley in this manual.
7. Install crankcase assembly.
   - Refer to installation procedure for Oil Pan and Crankcase in this manual.
8. Refill engine oil until full level on engine oil dipstick.

Downloaded from www.Manualslib.com manuals search engine

Oil Pump Oil Seal

Removal

1. Disconnect battery ground cable.
2. Drain engine oil.
3. Remove crankshaft pulley.
   - Refer to removal procedure for Crankshaft Pulley in this manual.
4. Remove timing belt.
   - Refer to removal procedure for Timing Belt in this manual.
5. Remove timing pulley from crankshaft.
6. Remove oil pump oil seal using a sealer puller.

NOTE: Take care not to damage sealing surfaces of oil pump and crankshaft when removing oil seal.

Installation

1. Install oil pump oil seal, apply engine oil to oil seal lip, then install oil seal using J-39202 installer.

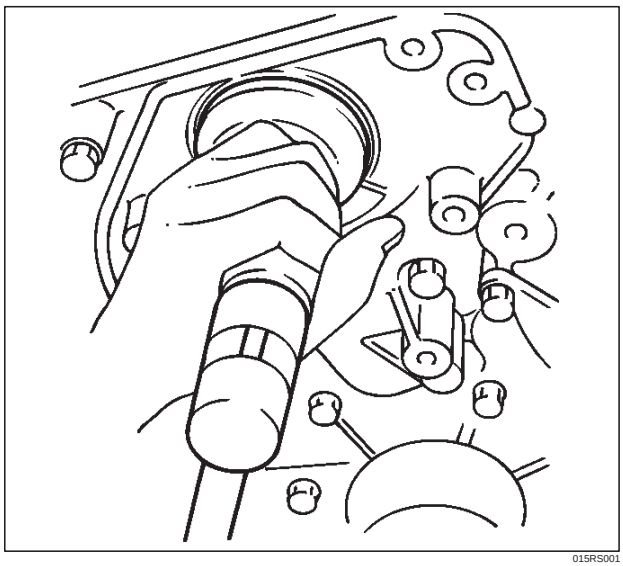

015RS001

2. Install timing pulley to crankshaft.
3. Install timing belt.
   - Refer to installation procedure for Timing Belt in this manual.
4. Install crankshaft pulley.
   - Refer to installation procedure for Crankshaft Pulley in this manual.
5. Refill engine oil until full level.

Downloaded from www.Manualslib.com manuals search engine

Oil Filter

Removal

1. Disconnect battery ground cable.
2. Drain engine oil.
3. Remove oil filter using J-36390 filter wrench.

Installation

1. Clean filter fitting surface and apply small amount of engine oil to sealing surface.
2. Install oil filter cartridge by hand until it comes in contact with sealing surface then rotate additional 2/3 turn to tighten using J-36390 filter wrench.

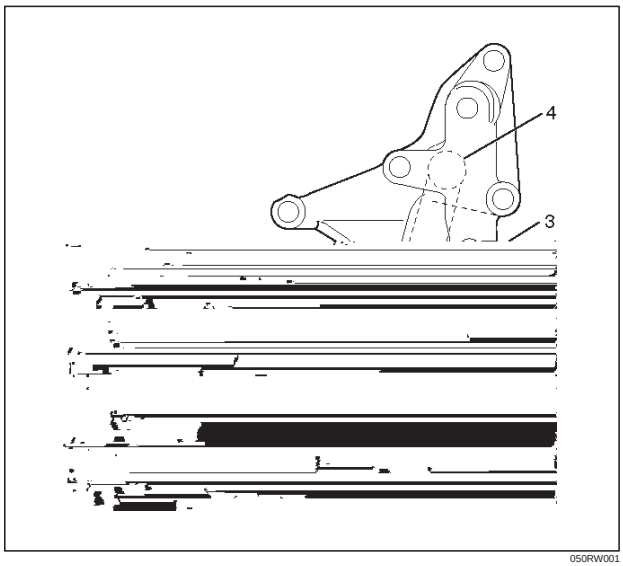

050RW001

Legend

(1) Oil Pump
(2) Oil Filter
(3) Oil Gallery
(4) From Filter
(5) To Filter

3. Fill engine oil until full level on dipstick.
4. Reconnect battery ground cable.

Downloaded from www.Manualslib.com manuals search engine

Main Data and Specification

General Specification

Item	Specifications
	6VE1
Oil capacity	5.3 liters

Torque Specifications

Crankcase, Oil pan, Timing belt tensioner, Timing pulley, timing belt cover, Oil pump, Oil gallery, Oil strainer

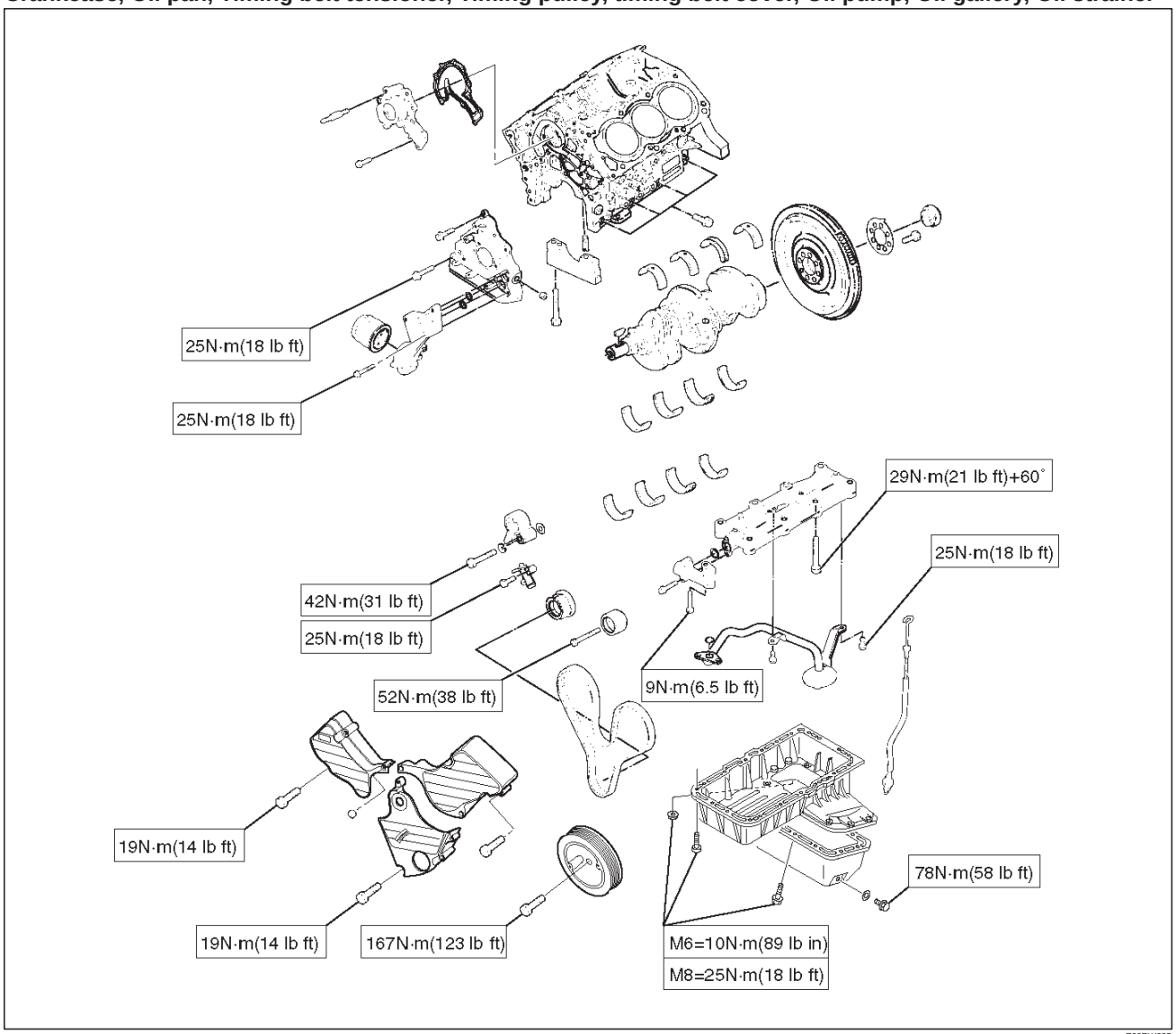

E06RW025

Downloaded from www.Manualslib.com manuals search engine

TROOPER

ENGINE

ENGINE SPEED CONTROL SYSTEM

CONTENTS

Service Precaution 6H–1
Accelerator Pedal 6H–2
Accelerator Pedal and Associated Parts . . 6H–2
Removal 6H–2
Installation 6H–2

Service Precaution

WARNING: THIS VEHICLE HAS A SUPPLEMENTAL RESTRAINT SYSTEM (SRS). REFER TO THE SRS COMPONENT AND WIRING LOCATION VIEW IN ORDER TO DETERMINE WHETHER YOU ARE PERFORMING SERVICE ON OR NEAR THE SRS COMPONENTS OR THE SRS WIRING. WHEN YOU ARE PERFORMING SERVICE ON OR NEAR THE SRS COMPONENTS OR THE SRS WIRING, REFER TO THE SRS SERVICE INFORMATION. FAILURE TO FOLLOW WARNINGS COULD RESULT IN POSSIBLE AIR BAG DEPLOYMENT, PERSONAL INJURY, OR OTHERWISE UNNEEDED SRS SYSTEM REPAIRS.

CAUTION: Always use the correct fastener in the proper location. When you replace a fastener, use ONLY the exact part number for that application. ISUZU will call out those fasteners that require a replacement after removal. ISUZU will also call out the fasteners that require thread lockers or thread sealant. UNLESS OTHERWISE SPECIFIED, do not use supplemental coatings (Paints, greases, or other corrosion inhibitors) on threaded fasteners or fastener joint interfaces. Generally, such coatings adversely affect the fastener torque and the joint clamping force, and may damage the fastener. When you install fasteners, use the correct tightening sequence and specifications. Following these instructions can help you avoid damage to parts and systems.

Downloaded from www.Manualslib.com manuals search engine

Accelerator Pedal

Accelerator Pedal and Associated Parts

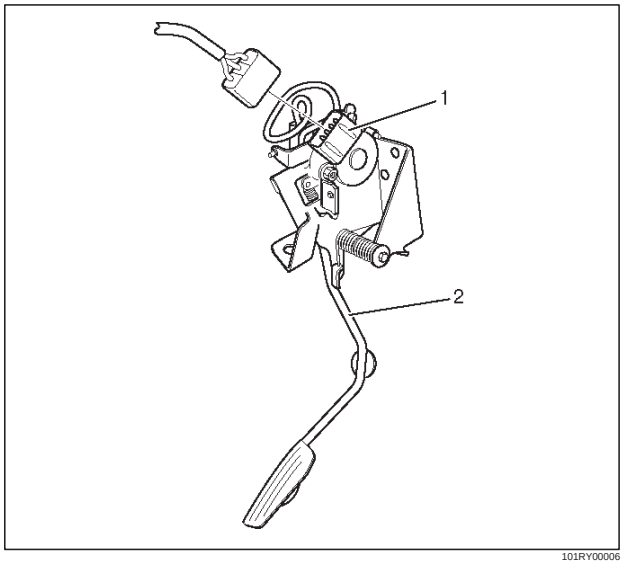

101RY00006

Legend

(1) Accelerator Position Sensor
(2) Accelerator Pedal Assembly

Removal

1. Disconnect battery ground cable.
2. Disconnect Accelerator position (AP) sensor (1) connector from Accelerator pedal assembly.
3. Remove Accelerator pedal assembly (2).

Installation

1. Install Accelerator pedal assembly (2).
2. Connect AP sensor (1) harness connector.
3. Connect battery ground cable.

Downloaded from www.Manualslib.com manuals search engine

TROOPER

ENGINE

INDUCTION

CONTENTS

Service Precaution 6J–1
Air Cleaner Element 6J–2
Removal 6J–2
Inspection 6J–2
Installation 6J–2

Service Precaution

WARNING: THIS VEHICLE HAS A SUPPLEMENTAL RESTRAINT SYSTEM (SRS). REFER TO THE SRS COMPONENT AND WIRING LOCATION VIEW IN ORDER TO DETERMINE WHETHER YOU ARE PERFORMING SERVICE ON OR NEAR THE SRS COMPONENTS OR THE SRS WIRING. WHEN YOU ARE PERFORMING SERVICE ON OR NEAR THE SRS COMPONENTS OR THE SRS WIRING, REFER TO THE SRS SERVICE INFORMATION. FAILURE TO FOLLOW WARNINGS COULD RESULT IN POSSIBLE AIR BAG DEPLOYMENT, PERSONAL INJURY, OR OTHERWISE UNNEEDED SRS SYSTEM REPAIRS.

CAUTION: Always use the correct fastener in the proper location. When you replace a fastener, use ONLY the exact part number for that application. ISUZU will call out those fasteners that require a replacement after removal. ISUZU will also call out the fasteners that require thread lockers or thread sealant. UNLESS OTHERWISE SPECIFIED, do not use supplemental coatings (Paints, greases, or other corrosion inhibitors) on threaded fasteners or fastener joint interfaces. Generally, such coatings adversely affect the fastener torque and the joint clamping force, and may damage the fastener. When you install fasteners, use the correct tightening sequence and specifications. Following these instructions can help you avoid damage to parts and systems.

Downloaded from www.Manualslib.com manuals search engine

Air Cleaner Element

Removal

1. Remove positive ventilation hose connector(1).
2. Remove intake air temperature sensor(2).
3. Remove air flow sensor(3).
4. Remove air cleaner duct assembly(4).
5. Remove air cleaner element(5).

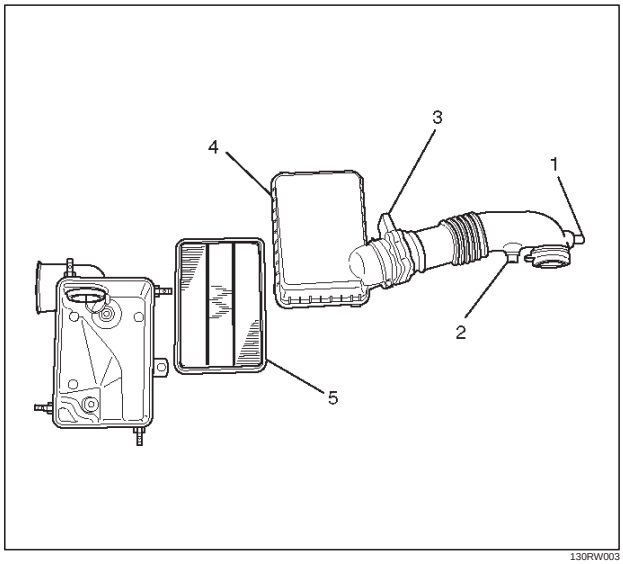

130RW003

Inspection

Check the air cleaner filter for damage or dust clogging. Replace if it is damaged, or clean if it is clogged.

Cleaning Method

Tap the air cleaner filter gently so as not to damage the paper filter, or clean the element by blowing with compressed air of about 490 kPa (71 psi) from the clean side if it is extremely dirty.

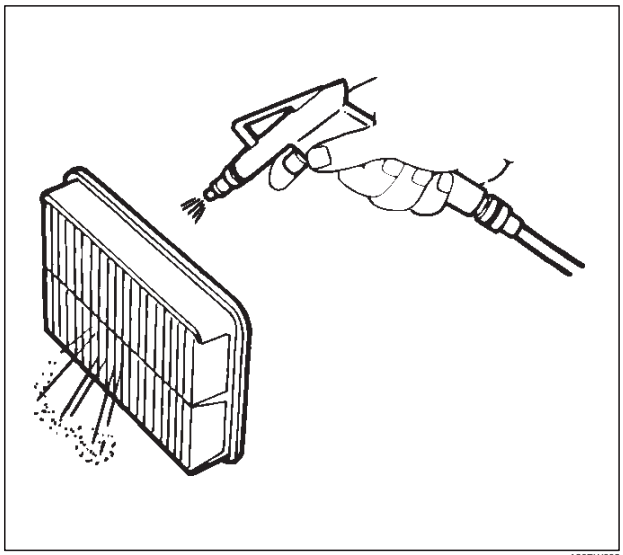

130RW002

Installation

1. Install air cleaner element(5).
2. Attach the air cleaner duct cover to the body completely, then clamp it with the clip(4).
3. Install mass air flow sensor(3).
4. Install air temperature sensor(2).
5. Install positive crankcase ventilation hose connector(1).

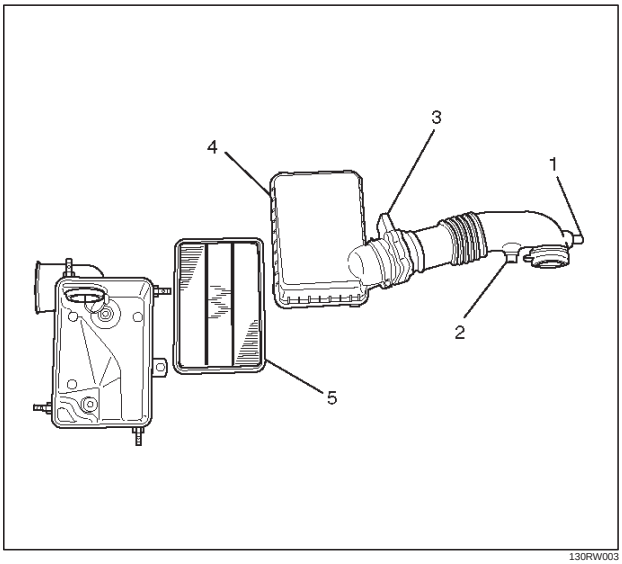

130RW003

Downloaded from www.Manualslib.com manuals search engine

TROOPER

TRANSMISSION

CONTENTS

Automatic Transmission (4L30–E) 7A
Transmission Control System (4L30–E) 7A1
Manual Transmission 7B
Clutch 7C

AUTOMATIC TRANSMISSION (4L30–E)

CONTENTS

Service Precaution 7A–3
Construction 7A–3
Range Reference Chart 7A–4
Normal Operation Of 2000 4L30–E Transmission 7A–5
Diagnosis 7A–5
Driver Information 7A–5
General Diagnosis Procedure 7A–8
Preliminary Inspection Chart 7A–9
Checking Transmission Fluid Level and Condition 7A–10
Test Driving 7A–11
Mechanical / Hydraulic Diagnosis Check Trans Indicator Chart 7A–12
Mechanical / Hydraulic Diagnosis Symptoms Index 7A–13
Stall Test 7A–23
Line Pressure Test 7A–23
Shift Speed Chart 7A–24
Lockup Speed Chart 7A–26
Changing Transmission Fluid 7A–27
Selector Lever 7A–27
Inspection 7A–27
Removal 7A–27
Installation 7A–28
Mode Switch 7A–29
Removal 7A–29
Installation 7A–29
Transmission (With Transfer Case / Extension Assembly) 7A–31
Transmission And Associated Parts 7A–31
Removal 7A–32
Installation 7A–33
Solenoid (Main Case Valve Body) 7A–38
Removal 7A–38
Installation 7A–38
Solenoid (Adapter Case Valve Body) 7A–39
Removal 7A–39
Installation 7A–39
Valve Body Assembly (Main Case) 7A–40
Removal 7A–40
Installation 7A–40
Valve Body Assembly (Adapter Case) 7A–41
Removal 7A–41
Installation 7A–41
Powertrain Control Module (PCM) 7A–41
Removal 7A–41
Installation 7A–41
Speed Sensor (Extension Housing) 7A–42
Removal 7A–42
Installation 7A–42
Transmission Oil Temperature Sensor (Main Case) 7A–42
Removal 7A–42
Installation 7A–42
Front Oil Seal (Converter Housing) 7A–43
Removal 7A–43
Installation 7A–43
Rear Oil Seal (Extension Housing) 7A–43
Removal 7A–43
Installation 7A–44
Transmission (4L30–E) 7A–44
Disassembly 7A–44
Reassembly 7A–48
Converter Housing And Oil Pump Assembly 7A–58
Disassembled View 7A–58
Disassembly 7A–58
Inspection And Repair 7A–58
Reassembly 7A–58
Oil Pump 7A–59
Disassembled View 7A–59
Disassembly 7A–59
Inspection And Repair 7A–60
Reassembly 7A–60
Main Case Valve Body 7A–61

Downloaded from www.Manualslib.com manuals search engine

Disassembled View 7A–61
Disassembly 7A–61
Inspection And Repair 7A–62
Reassembly 7A–62
Adapter Case Valve Body 7A–63
Disassembled View 7A–63
Disassembly 7A–63
Inspection And Repair 7A–63
Reassembly 7A–63
Third Clutch And Sprag Unit 7A–65
Disassembled View 7A–65
Disassembly 7A–65
Inspection And Repair 7A–65
Reassembly 7A–66
Third Clutch 7A–67
Disassembled View 7A–67
Disassemble 7A–67
Inspection And Repair 7A–67
Reassembly 7A–67
Sprag Unit 7A–69
Disassembled View 7A–69
Disassembly 7A–69
Inspection And Repair 7A–69
Reassembly 7A–69
Second Clutch 7A–70
Disassembled View 7A–70
Disassembly 7A–70
Inspection And Repair 7A–71
Reassembly 7A–71
3–4 Accumulator Piston 7A–72
Disassembled View 7A–72
Disassembly 7A–72
Inspection And Repair 7A–73
Reassembly 7A–73
Reverse Clutch Piston And Center Support . 7A–74
Disassembled View 7A–74
Disassembly 7A–74
Inspection And Repair 7A–75
Reassembly 7A–75
Overrun Clutch And Turbine Shaft 7A–76
Disassembled View 7A–76
Disassembly 7A–77
Inspection And Repair 7A–77
Reassembly 7A–77
Main Data And Specification 7A–79
Special Tools 7A–83
4L30–E Parts List 7A–86
Extension Housing Assembly Oil Seal 7A–94
Extension Housing Assembly Rear Oil Seal and Associated Parts 7A–94
Removal 7A–94
Installation 7A–94
Extension Housing Assembly 7A–96
Extension Housing Assembly and Associated Parts 7A–96
Removal 7A–97
Installation 7A–97
Extension Housing Assembly 7A–99
Extension Housing Assembly and Associated Parts 7A–99
Removal 7A–100
Installation 7A–100
Extension Housing Assembly 7A–102
Disassembly 7A–103
Reassembly 7A–103
Inspection and Repair 7A–104
Main Data and Specifications 7A–105
Special Tools 7A–106

Downloaded from www.Manualslib.com manuals search engine

Service Precaution

WARNING: THIS VEHICLE HAS A SUPPLEMENTAL RESTRAINT SYSTEM (SRS). REFER TO THE SRS COMPONENT AND WIRING LOCATION VIEW IN ORDER TO DETERMINE WHETHER YOU ARE PERFORMING SERVICE ON OR NEAR THE SRS COMPONENTS OR THE SRS WIRING. WHEN YOU ARE PERFORMING SERVICE ON OR NEAR THE SRS COMPONENTS OR THE SRS WIRING, REFER TO THE SRS SERVICE INFORMATION. FAILURE TO FOLLOW WARNINGS COULD RESULT IN POSSIBLE AIR BAG DEPLOYMENT, PERSONAL INJURY, OR OTHERWISE UNNEEDED SRS SYSTEM REPAIRS.

CAUTION: Always use the correct fastener in the proper location. When you replace a fastener, use ONLY the exact part number for that application. ISUZU will call out those fasteners that require a replacement after removal. ISUZU will also call out the fasteners that require thread lockers or thread sealant. UNLESS OTHERWISE SPECIFIED, do not use supplemental coatings (Paints, greases, or other corrosion inhibitors) on threaded fasteners or fastener joint interfaces. Generally, such coatings adversely affect the fastener torque and the joint clamping force, and may damage the fastener. When you install fasteners, use the correct tightening sequence and specifications. Following these instructions can help you avoid damage to parts and systems.

Construction

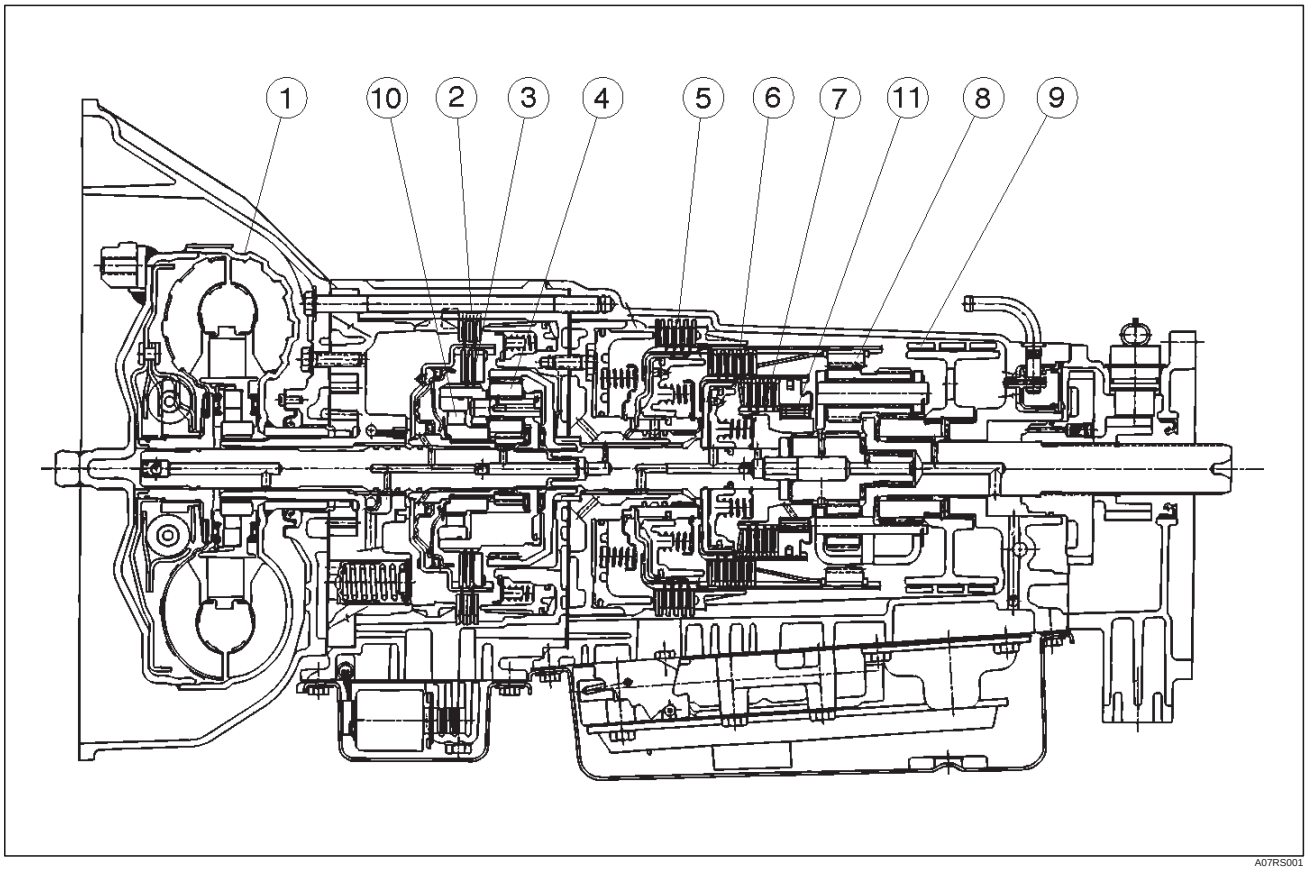

A07RS001

Legend

(1) Torque Converter Clutch (TCC)
(2) Fourth Clutch (C4)
(3) Overrun Clutch (OC)
(4) Overdrive Unit
(5) Reverse Clutch (RC)
(6) Second Clutch (C2)
(7) Third Clutch (C3)
(8) Ravigneaux Planetary Gear Set
(9) Brake Band (B)
(10) Overdrive Free Wheel (One Way Clutch) (OFW)
(11) Principle Sprag Assembly (One Way Clutch) (PFW)

Downloaded from www.Manualslib.com manuals search engine

Range Reference Chart

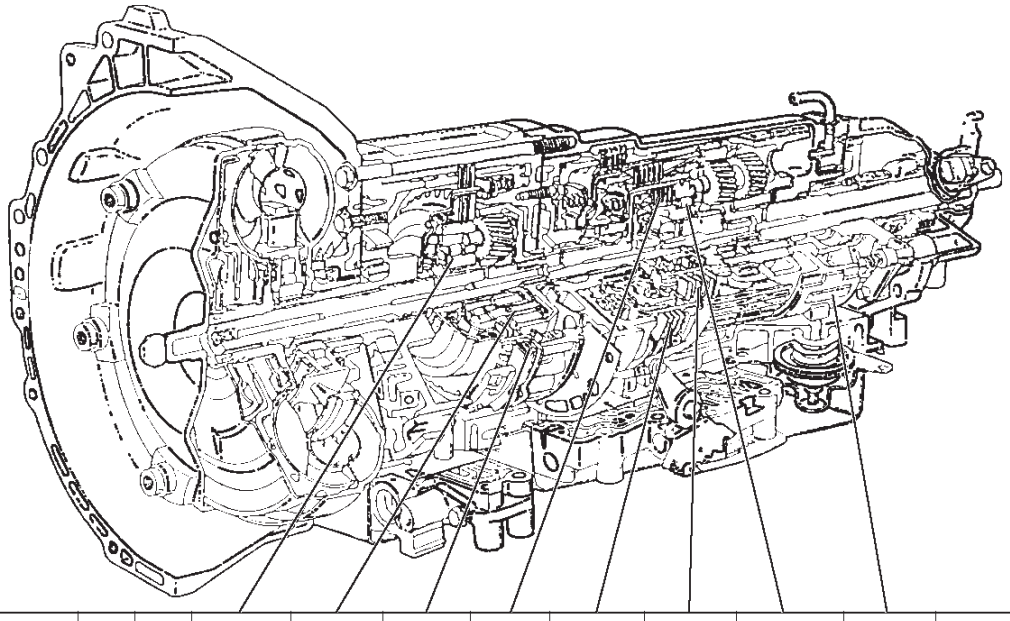

RANGE	GEAR	SOL A N.C.	SOL B N.O.	O/DRIVE FREE WHEEL (OFW)	O/RUN CLUTCH (OC)	FOURTH CLUTCH (C4)	THIRD CLUTCH (C3)	REVERSE CLUTCH (RC)	SECOND CLUTCH (C2)	PRINCIPLE SPRAG ASM (PFW)	BAND ASM (B)	ENGINE BRAKING	TORQUE CONV. CLUTCH
P-N		OFF	ON		APP							NO	NO
R	REVERSE	OFF	ON	LD	APP			APP		LD		NO	NO
D	1ST	OFF	ON	LD	APP					LD	APP	NO	NO
	2ND	ON	ON	LD	APP				APP	FW	APP	YES	ECCC
	3RD	ON	OFF	LD	APP		APP		APP	NE		YES	ECCC
	4TH	OFF	OFF	FW		APP	APP		APP	NE		YES	ECCC
3	1ST	OFF	ON	LD	APP					LD	APP	NO	NO
	2ND	ON	ON	LD	APP				APP	FW	APP	YES	ECCC
	3RD	ON	OFF	LD	APP		APP		APP	NE		YES	ECCC
2	1ST	OFF	ON	LD	APP		APP			LD	APP	YES	NO
	2ND	ON	ON	LD	APP				APP	FW	APP	YES	ECCC
L	1ST	OFF	ON	LD	APP		APP			LD	APP	YES	NO

LD : LOCKED IN DRIVE FW : FREEWHEELING NE : NOT EFFECTIVE APP : APPLIED

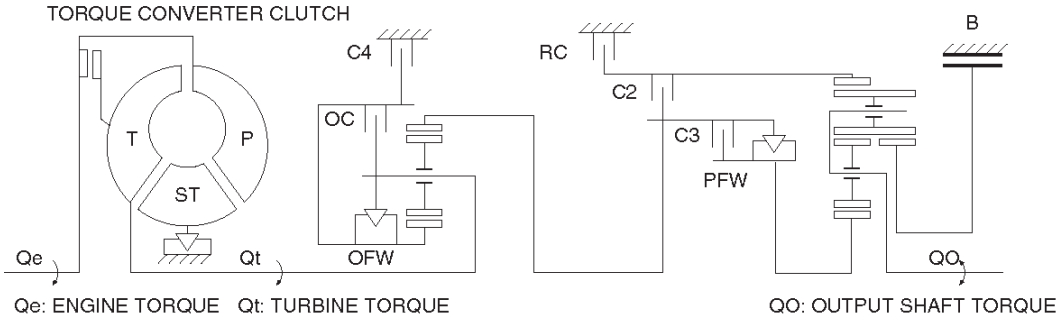

C07RY00032

Downloaded from www.Manualslib.com manuals search engine

Normal Operation Of 2000 4L30–E Transmission

Torque Converter Clutch (Electronically Controlled Capacity Clutch : ECCC) Application Conditions:

The clutch apply is controlled by moving the converter clutch control valve by commanding Torque Converter Clutch (TCC) solenoid using the PWM signal.
The TCC is normally applied in 2nd, 3rd and 4th gears only when all of the following conditions exist:

— The engine coolant temperature is above 70˚C (158˚F) and ATF temperature is above 18˚C (64.5˚F).

— The brake pedal is released.

— The shift pattern requests TCC apply.

Moreover, TCC is always applied in 2nd, 3rd and 4th gears when the transmission oil temperature is above 135˚C (275˚F).
This mode should be canceled at 125˚C (257˚F).

ATF Warning Lamp

The ATF warning lamp will be constantly on (not flashing) if the transmission oil temperature is above 145˚C (293˚F).
The ATF warning lamp goes off again when the transmission oil temperature is below 125˚C (257˚F).

Reverse Lock Out

With the selector lever in reverse position, the PCM will not close the PWM solenoid until the vehicle is below 11 km/h (6.8 mph), thus preventing reverse engagement above this speed.

Diagnosis

Introduction

The systematic troubleshooting information covered by this Section offers a practical and systematic approach to diagnosing 4L30–E transmission, using information that can be obtained from road tests, electrical diagnosis, oil pressure checks or noise evaluation.
The key to correcting a complaint is to make use of all of the available symptoms and logically letting them direct you to the cause.
When dealing with automatic transmission complaints, it is best to gather as many symptoms as possible before making the decision to remove the transmission from the vehicle.
Frequently, the correction of the complaint does not require removal of the transmission from the vehicle.

Driver Information

To analyze the problem fill out a complete description of the owner’s complaint.
Please draw a circle around the right information and complete the following form. (The next page is an example of a completed form). You can draw a circle around many numbers if you are not sure.

Downloaded from www.Manualslib.com manuals search engine

A - Today's date :	Month :	Day :	Year : .....
B - End User Name, Address :			
C - Date of Problem :	Month :	Day :	Year : .....
D - Mileage : ..... Miles / Km	**E - With Ignition ON is CHECK TRANS Indicator :** 1- Flashing 2- Not Flashing	**F -Car load when problem occured :** 1 - Towing a trailer 2- ..... people OR ..... Kg	
G - Weather conditions when problem : 1- Clear 2- Cloudy 3- Rain 4- Snow 5- Unstable 6-Any	**H - Weather Temperature when problem:** 1- Hot 2- Warm 3- Cool 4- Cold 5- Unstable 6- Any	**I - Road Conditions when problem :** 1- Any 2- Inter City 3- Outside City 4- Highway 5 - Uphill 6- Downhill 7- Unpaved 8- Snow 9 - Others :	**J - Frequency of the Problem :** 1- Always 2- Occasional : ..... times/day, ... times/month 3- Only Once 4- Others :
K - Engine Condition : 1- Always 2- At Cold 3- During Warming up 4- After Warming or Hot 5- Others	**L - Engine Speed when the problem occured :** 1- Idling 2- Starting 3- Stalling 4- High RPM 5- Low RPM	**M - Transmission Condition when it occured :** 1- Any 2- Idling 3- Starting 4- Driving 5- Accelerating 6-Coasting 7- In corner 8- Shifting	

N - If there is a Transmission driveability problem BEFORE THE CHECK TRANS INDICATOR WAS FLASHING :

1- No Power in Range : All - P - R - N - D - 3 - 2 - L during a : upshift : 1-2 / 2-3 / 3-4 or downshift : 4-3 / 3-2 / 2-1
2- No shift in Range : All - P - R - N - D - 3 - 2 - L during a : upshift : 1-2 / 2-3 / 3-4 or downshift : 4-3 / 3-2 / 2-1
3- Shift Shock in Range : All - P - R - N - D - 3 - 2 - L during a : upshift : 1-2 / 2-3 / 3-4 or downshift : 4-3 / 3-2 / 2-1
4- Shift Slip in Range : All - P - R - N - D - 3 - 2 - L during a : upshift : 1-2 / 2-3 / 3-4 or downshift : 4-3 / 3-2 / 2-1
5- Shift Delayed in Range : All - P - R - N - D - 3 - 2 - L during a : upshift : 1-2 / 2-3 / 3-4 or downshift : 4-3 / 3-2 / 2-1
6- Shift Point too high in Range : All - P - R - N - D - 3 - 2 - L during a : upshift : 1-2 / 2-3 / 3-4 or downshift : 4-3 / 3-2 / 2-1
7- Shift Point too low in Range : All - P - R - N - D - 3 - 2 - L during a : upshift : 1-2 / 2-3 / 3-4 or downshift : 4-3 / 3-2 / 2-1
8- TCC Shudder in Range : All - P - R - N - D - 3 - 2 - L during a : upshift : 1-2 / 2-3 / 3-4 or downshift : 4-3 / 3-2 / 2-1
9- Noise in Range : All - P - R - N - D - 3 - 2 - L during a : upshift : 1-2 / 2-3 / 3-4 or downshift : 4-3 / 3-2 / 2-1
Noise type : 1- Buzz 2- Whine 3- Clunk 4- Rattle 5- Whistle // 6- light 7-medium 8- heavy
10- Other : ..... in Range : All - P - R - N - D - 3 - 2 - L during a : upshift : 1-2 / 2-3 / 3-4 or downshift : 4-3 / 3-2 / 2-1

O - Other customer concern and comments

P - Isuzu Vehicle Code :	.....	**Q - VIN Number**	.....
R - Date of Vehicle Registration	Month :	Day :	Year : .....
S - Trans. model :	.....	**T - A/T Serial Number :**	.....
U - Your name :	.....		

V - Dealer Name, Address, Phone

F07RT036

Example of form completed.

Downloaded from www.Manualslib.com manuals search engine

A - Today's date :	Month : April.....	Day : .13.....	Year : .1994.....
B - End User Name, Address :	Dave Smith 6584, Arlington road Plymouth MI 48170 USA		
C - Date of Problem :	Month : April.....	Day : .8.....	Year : .1994.....
D - Mileage : 12230...Miles / Km	**E - With Ignition ON is CHECK TRANS Indicator :** 1- Flashing 2- Not Flashing	**F - Car load when problem occured :** 1 - Towing a trailer 2- ..2..... people OR ..... Kg	
G - Weather conditions when problem : 1- Clear 2- Cloudy 3- Rain 4- Snow 5- Unstable 6- Any	**H - Weather Temperature when problem:** 1- Hot 2- Warm 3- Cool 4- Cold 5- Unstable 6- Any	**I - Road Conditions when problem :** 1- Any 2- Inter City 3- Outside City 4- Highway 5 - Uphill 6- Downhill 7- Unpaved ~~8- Snow~~ 9 - Others	**J - Frequency of the Problem :** 1- Always 2- Occasional : ..... times/day, ...3... times/month 3- Only Once 4- Others : this means do not take this into account
K - Engine Condition : 1- Always 2- At Cold 3- During Warming up 4- After Warming or Hot 5- Others	**L - Engine Speed when the problem occured :** 1- Idling 2- Starting 3- Stalling 4- High RPM 5- Low RPM	**M - Transmission Condition when it occured :** 1- Any 2- Idling 3- Starting 4- Driving 5- Accelerating 6- Coasting 7- In corner 8- Shifting	

N - If there is a Transmission driveability problem BEFORE THE CHECK TRANS INDICATOR WAS FLASHING :

1- No Power	in Range : All - P - R - N - D - 3 - 2 - L	during a : upshift : 1-2 / 2-3 / 3-4 or downshift : 4-3 / 3-2 / 2-1
2- No shift	in Range : All - P - R - N - D - 3 - 2 - L	during a : upshift : 1-2 / 2-3 / 3-4 or downshift : 4-3 / 3-2 / 2-1
3- Shift Shock	in Range : All - P - R - N - D - 3 - 2 - L	during a : upshift : 1-2 / 2-3 / 3-4 or downshift : 4-3 / 3-2 / 2-1
4- Shift Slip	in Range : All - P - R - N - D - 3 - 2 - L	during a : upshift : 1-2 / 2-3 / 3-4 or downshift : 4-3 / 3-2 / 2-1
5- Shift Delayed	in Range : All - P - R - N - D - 3 - 2 - L	during a : upshift : 1-2 / 2-3 / 3-4 or downshift : 4-3 / 3-2 / 2-1
6- Shift Point too high	in Range : All - P - R - N - D - 3 - 2 - L	during a : upshift : 1-2 / 2-3 / 3-4 or downshift : 4-3 / 3-2 / 2-1
7- Shift Point too low	in Range : All - P - R - N - D - 3 - 2 - L	during a : upshift : 1-2 / 2-3 / 3-4 or downshift : 4-3 / 3-2 / 2-1
8- TCC Shudder	in Range : All - P - R - N - D - 3 - 2 - L	during a : upshift : 1-2 / 2-3 / 3-4 or downshift : 4-3 / 3-2 / 2-1
9- Noise	in Range : All - P - R - N - D - 3 - 2 - L	during a : upshift : 1-2 / 2-3 / 3-4 or downshift : 4-3 / 3-2 / 2-1
Noise type : 1- Buzz 2- Whine 3- Clunk 4- Rattle 5- Whistle // 6- light 7- medium 8- heavy		
10- Other :	in Range : All - P - R - N - D - 3 - 2 - L	during a : upshift : 1-2 / 2-3 / 3-4 or downshift : 4-3 / 3-2 / 2-1

O - Other customer concern and comments :

(This is just an example). Shift shock very harsh overall during a downshift. Not sure if it's the 4-3 or 3-2.

P - Isuzu Vehicle Code :	94 UCR	**Q - VIN Number**	4S2CV58ZXM4324047
R - Date of Vehicle Registration	Month : November.	Day : ....18.....	Year : ..1993.....
S - Trans. model :	4L30-E	**T - A/T Serial Number :**	96 358 654
U - Your name :	Joe Spring		

V - Dealer Name, Address, Phone

Kent Helfrich

Home-town ISUZU

900 - 999 - 9999

F07RT037

Downloaded from www.Manualslib.com manuals search engine

General Diagnosis Procedure

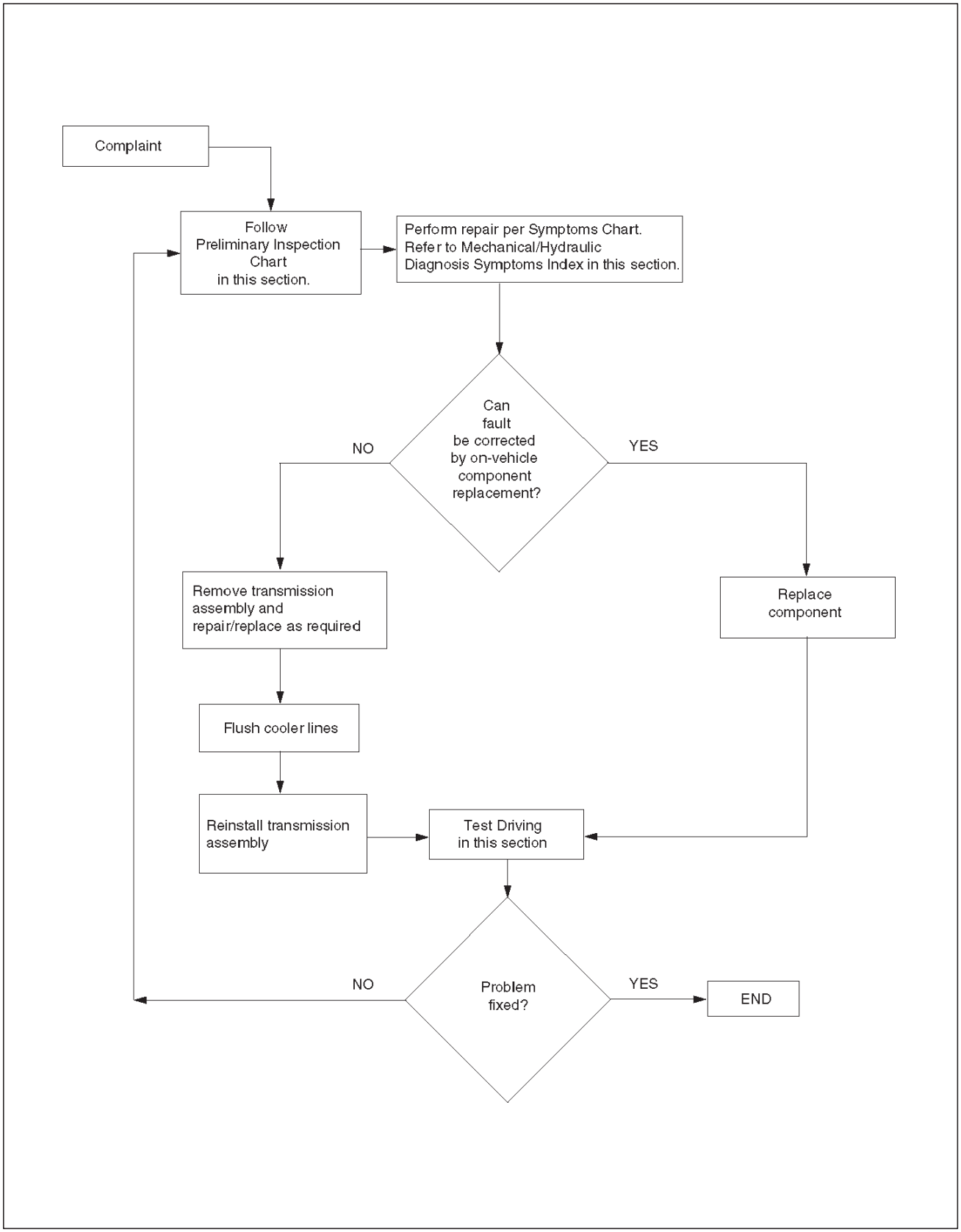

Downloaded from www.Manualslib.com manuals search engine

Preliminary Inspection Chart

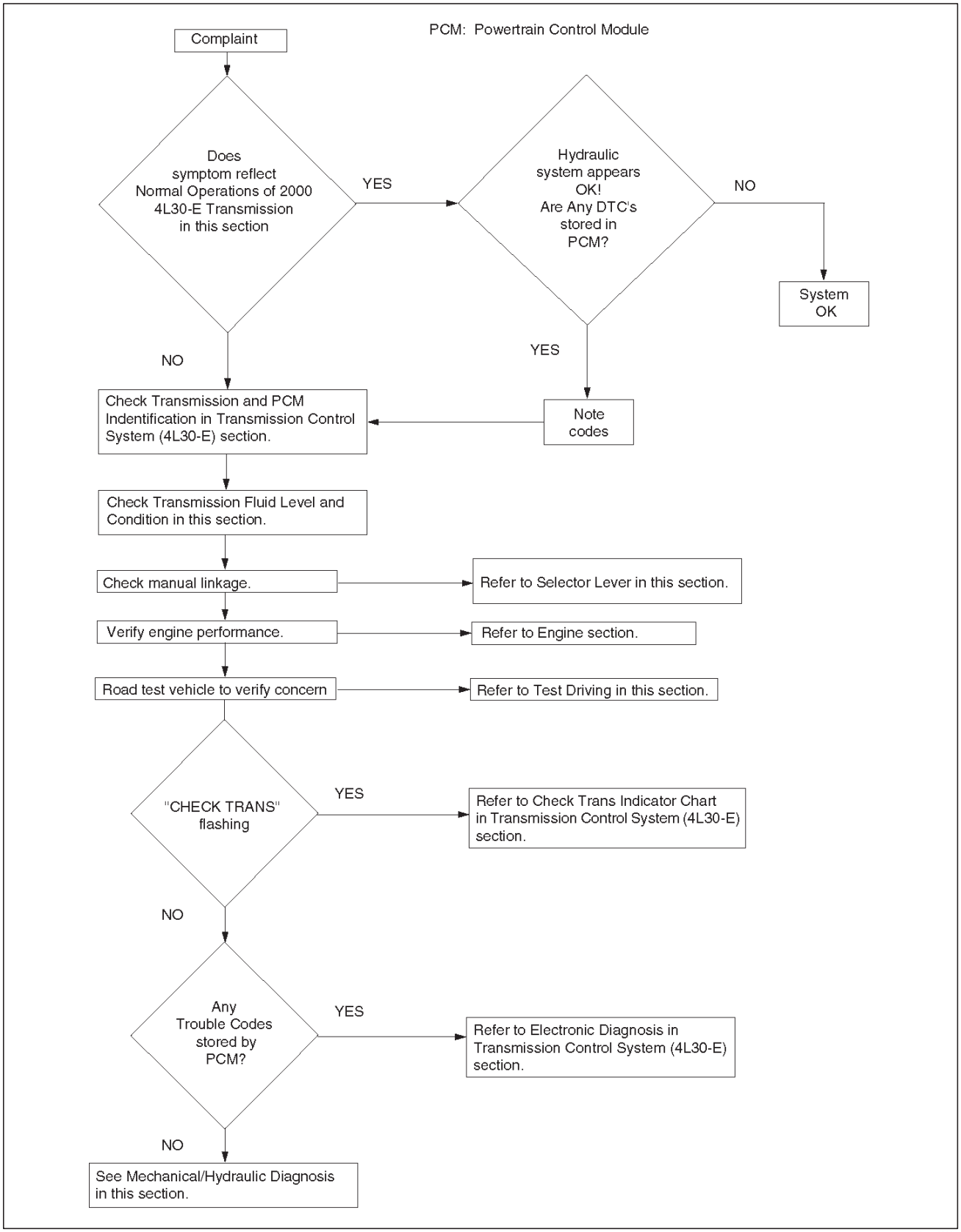

F07RY00001

Downloaded from www.Manualslib.com manuals search engine

Checking Transmission Fluid Level and Condition

Checking fluid level and condition (color and odor) at regular intervals will provide early diagnosis information about the transmission. This information may be used to correct a condition that, if not detected early, could result in major transmission repairs.

IMPORTANT: When new, automatic transmission fluid is red in color. As the vehicle is driven, the transmission fluid will begin to look darker in color. The color may eventually appear light brown.

A dark brown color with burnt odor may indicate excessive fluid deterioration and signal a need for fluid change.

Fluid Level

When adding or changing fluid, use only DEXRON ®–III. Refer to Maintenance and Lubrication in General Information section for maintenance information and servicing interval.

CAUTION: DO NOT OVERFILL.

Overfilling will cause foaming, loss of fluid, abnormal shifting and possible damage to the transmission.

1. Park the vehicle on level ground and apply the parking brake firmly.
2. Check fluid level with engine running at idle.

NOTE: Be sure that transmission fluid temperature is below 30˚C (86˚F).

3. Move the selector lever through all gear ranges.
4. Move the selector lever to “Park”.
5. Let engine idle for 3 minutes and open the overfill screw (1).
6. Add released transmission fluid until it flows out over the overfill screw opening.
7. Let engine idle until a fluid temperature between 32˚C (90˚F) and 57˚C (135˚F) is reached, then close the overfill screw (1).

Torque: 38 N•m (28 lb ft)

NOTE: To prevent fluid leaks, the overfill screw and oil drain screws gasket must be replaced each time these screws are removed.

NOTE: Check transmission fluid temperature with scan tool.

Minimum fluid level → 57˚C (135˚F)

Maximum fluid level → 32˚C (90˚F)

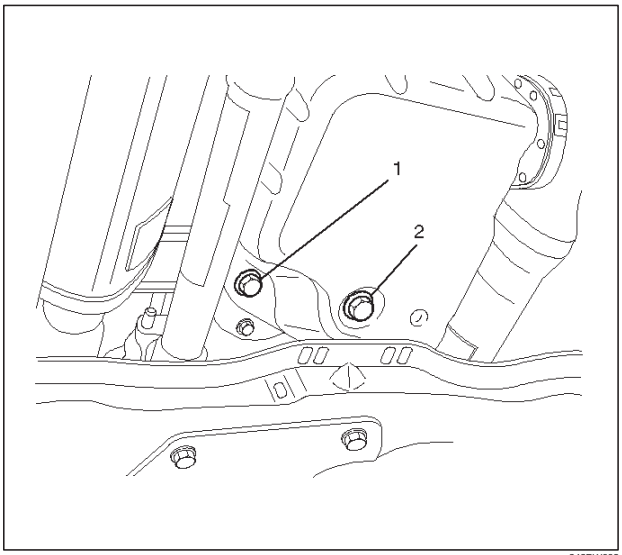

242RW003

CAUTION: Do not open overfill screw with engine stopped.

CAUTION: DO NOT CHECK FLUID LEVEL UNDER THESE CONDITIONS:

- Immediately after driving at sustained highway speeds.
- In heavy city traffic during hot weather.
- If vehicle is towing a trailer.

If the vehicle has been operated under these conditions, shut the engine off and allow the vehicle to “cool” for thirty (30) minutes. After the cool down period, restart the vehicle and continue from step 2 above.

Downloaded from www.Manualslib.com manuals search engine

Fluid Condition

	FLUID CONDITION			
	NORMAL*		CONTAMINATED	
COLOR	RED OR LIGHT BROWN	BROWN	NON–TRANSPARENT / PINK	BROWN
DRAIN REQUIRED?	NO	YES	YES	YES
CONTAMINA–TION	NONE	Very small amount of foreign material in bottom of pan	Contamination by coolant or other source	Large pieces of metal or other foreign material in bottom of pan
CORRECT LEVEL AND CONDITION	1. LOW LEVEL: A. Add fluid to obtain proper level & check for external leaks. B. Correct cause of leak. 2. HIGH LEVEL: – Remove excess fluid	– Remove both pans – Change filter – Flush cooler – Add new fluid – Check level	– Repair/replace radiator cooler – Transmission overhaul required – Check for: ● Damaged plates and seals ● Contaminated solenoids – Flush cooler – Add new fluid – Check level	– Transmission overhaul required – Flush cooler and cooler lines – Add new fluid – Check level

*Fluid should be changed according to maintenance schedule.

Test Driving

Some 4L30–E automatic transmission complaints will require a test drive as a part of the diagnostic procedure. Some codes will not set unless the vehicle is moving. The purpose of the test drive is to duplicate the customer's complaint condition and set a current Powertrain Control Module (PCM) trouble code. Perform this procedure before each 4L30–E automatic transmission repair, and again after repairs are made.

IMPORTANT:

- Duplicate the condition under which the customer's complaint was observed.
- Depending on the complaint, the line pressure gauge and the scan tool may be required during the test drive.
- During the test drive, it is important to record all necessary data from the areas being monitored, for use in diagnosis. Also listen for and note any unusual noises.

The following procedure should be used to test drive 4L30–E automatic transmission complaint vehicles:

1. Turn the ignition ON without starting the engine. Check that the "CHECK TRANS" lamp comes on for approximately 2 seconds and then goes out and remains out.
   - If the lamp is flashing, GOTO Check Trans Indicator in Transmission Control System (4L30–E) section.
   - If no serial data is present, GOTO OBD System Check. Refer to Driveability and Emissions in Engine section.
   - If the lamp stays ON or stays OFF, GOTO "Check Trans" Check in Transmission Control System (4L30–E) section.
2. Drive the vehicle. During the test drive, be sure that the transmission achieves normal operating temperature (approx. 20 minutes).

   Allow the transmission to go through all of its gear ranges, checking shift timing and firmness. Duplicate the owner's complaint condition as closely as possible during the test drive.
3. If, during the test drive, the "CHECK TRANS" lamp comes on, use the scan tool to check for trouble codes.
4. If, during the test drive, a problem is felt, but the "CHECK TRANS" lamp does not come on and no trouble codes are present, drive the vehicle with the PCM disconnected (manually shifting the vehicle).
   - In Manual L, the vehicle operates in first gear.
   - In Manual 2, the vehicle operates in third gear.
   - In Manual 3 or "D", the vehicle operates in fourth gear.

   If the problem still exists with the PCM disconnected, refer to Mechanical/Hydraulic Diagnosis in this section.
5. If no problem has been found at this point, check all underhood connections that supply power to the PCM and ignition fuses. Physically and visually inspect all the PCM harness connectors for loose or corroded terminals. Inspect the PCM ground points.

Downloaded from www.Manualslib.com manuals search engine

Mechanical / Hydraulic Diagnosis Check Trans Indicator Chart

Perform Preliminary Inspection First!

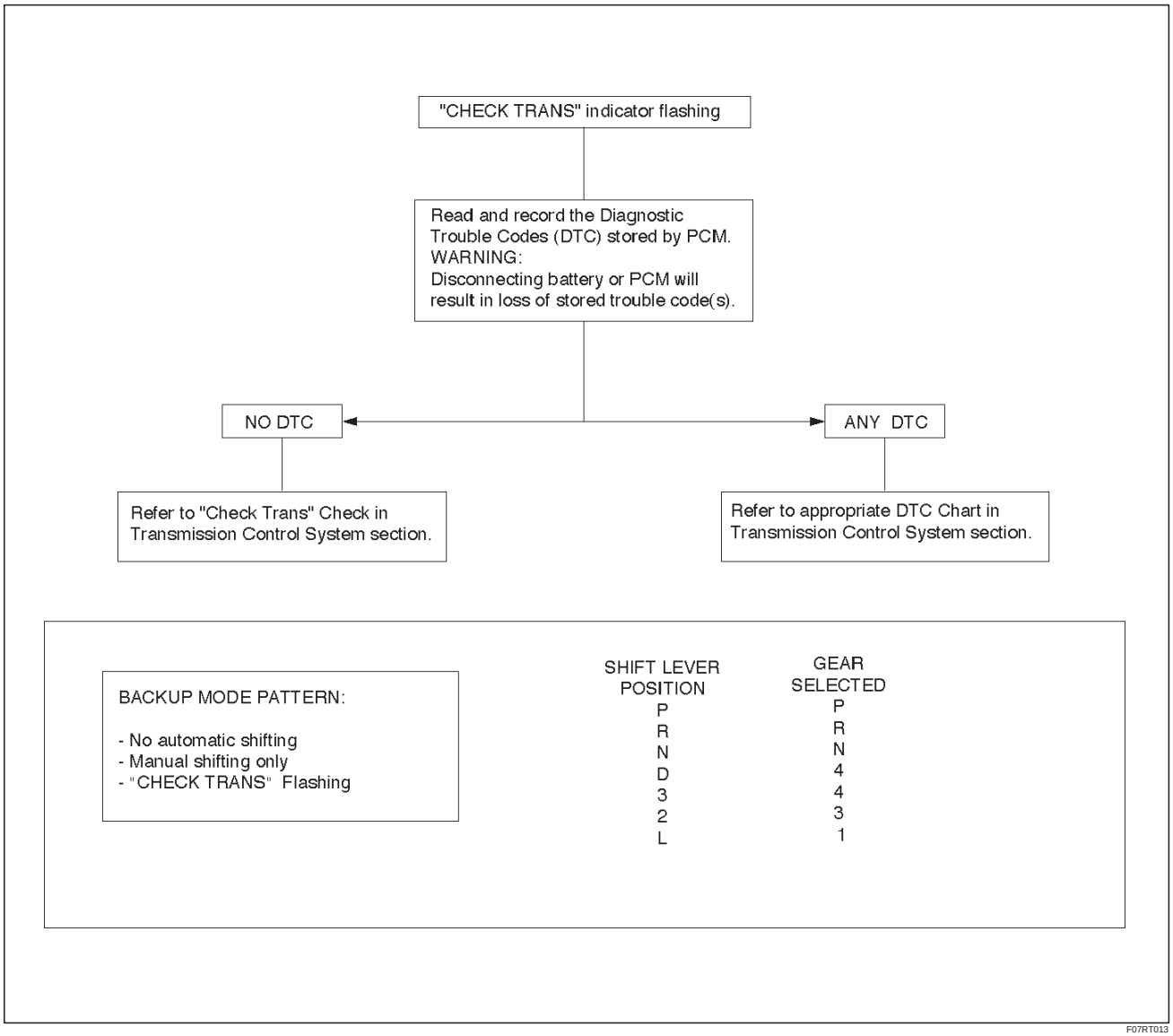

When the “CHECK TRANS” indicator is flashing, it indicates that a problem related to the transmission, the Powertrain Control Module (PCM), or the vehicle harness has occurred.

The system is now operating in a “BACKUP MODE” where the risk of further damaging the transmission has been reduced. The vehicle may be shifted manually.

If the initial problem is intermittent or seldom, switching the engine OFF/ON might allow normal operation again until the problem reoccurs.

Downloaded from www.Manualslib.com manuals search engine

Mechanical / Hydraulic Diagnosis Symptoms Index

Perform Preliminary Inspection First!

CHART	SYMPTOMS
1	NO ENGINE START IN NEUTRAL OR PARK
2	NO FORWARD GEARS IN ANY RANGE/NO REVERSE
3	NO ENGINE BRAKE IN ANY RANGE
4	POOR SHIFTING IN ALL GEARS (ALL HARSH OR ALL SOFT)
5a	DELAYS IN DRIVE AND REVERSE
5b	DELAYS IN REVERSE ONLY
6	DIAGNOSTIC TROUBLE CODE (DTC) P0730
7	HARSH 1–2 SHIFT
8	HARSH 3–4 SHIFT
9a	3–2 DOWNSHIFT COMPLAINT
9b	HARSH SHIFT WHEN SHIFTING INTO “D” OR ACCELERATING FROM STOP
9c	COASTDOWN HARSH SHIFT OR CLUNK AT 3–2 DOWNSHIFT
10	INTERMITTENT 4TH TO 2ND GEAR DOWNSHIFT AT STEADY SPEED
11	ENGINE FLARE AT SHIFTING DURING TURNING ONLY (USUALLY WITH WARM ENGINE)
12	ENGINE FLARE DURING 1–2 OR 2–3 SHIFT
13	SHUDDER ONLY DURING TORQUE CONVERTER CLUTCH (TCC) APPLYING
14	POSSIBLE CAUSES OF TRANSMISSION NOISE
15a	POSSIBLE CAUSES OF LOW LINE PRESSURE
15b	POSSIBLE CAUSES OF HIGH LINE PRESSURE
16	POSSIBLE CAUSES OF TRANSMISSION FLUID LEAKS

NOTE: Numbers with parenthesis on the following charts refer to Parts List at end of this section.

Chart 1: No Engine Start In Neutral Or Park

Step	Action	Yes	No
1	Does engine start when shift lever moved from drive to neutral mostly in hot condition?	Go to Step 2	Go to Step 3
2	Does engine start in park at any condition?	Re–test vehicle	Go to Step 4
3	Does engine also not start in neutral when shift lever moved from park to neutral?	Go to Step 4	Go to Step 5
4	Check mode switch (63) setting. Readjust if necessary. Problems fixed?	Re–test vehicle	Go to Step 5
5	Check start circuit of mode switch (63) open in neutral. Was open found?	Locate and repair open(s)	Replace mode switch (63)

Downloaded from www.Manualslib.com manuals search engine

Chart 2: No Forward Gears In Any Range/No Reverse

Step	Action	Yes	No
1	Check line pressure. Refer to Line Pressure Test in this section. Was line pressure normal?	Go to Step 2	Use Chart 15a: Possible Causes of Low Line Pressure in this section
2	1. Check internal linkage: – Manual linkage (58) not moving manual valve (326). 2. Check for internal mechanical damage: – Turbine shaft (506) broken loose. – Overrun roller clutch (516) broken loose. Was the problem found?	Repair or replace	—

Chart 3: No Engine Brake In Any Range

Step	Action	Yes	No
1	Check line pressure. Refer to Line Pressure Test in this section. Was line pressure normal?	Go to Step 2	Use Chart 15a: Possible Causes of Low Line Pressure in this section
2	1. Check for overrun clutch leaks caused by: – Damaged piston lip (513) – Check ball defective (504) 2. Check for overrun lockout valve (705) stuck by foreign material. 3. Check for leaks at turbine shaft (506) caused by: – Teflon seal rings damaged (508) – Excessive wear of turbine shaft bearing surfaces. Was the problem found?	Repair or replace	—

Downloaded from www.Manualslib.com manuals search engine

Chart 4: Poor Shifting In All Gears (All Harsh Or All Soft)

Step	Action	Yes	No
1	Check line pressure. Refer to Line Pressure Test in this section. Was line pressure normal?	Go to Step 2	Go to Step 3
2	1. Check for these conditions which could affect clutch apply time: – Defective band apply solenoid (323). – Defective servo or/and accumulator piston. – Excessive clutch piston travel. 2. Check of possible causes of internal leaks: – Cut or damaged sealing ring(s) – Damaged sealing gasket(s) – Check ball missing or out of location in 2nd and 3rd clutch pistons. 3. Check for causes of burned clutch plates or band. Was the problem found?	Repair or replace	—
3	Was the line pressure high?	Go to Step 4	Use Chart 15a: Possible Causes of Low Line Pressure in this section
4	Does DTC P0705 set?	Diagnose those DTC(s) first	Use Chart 15b: Possible Causes of High Line Pressure in this section

Chart 5a: Delays In Drive And Reverse

NOTE: A short delay (less than 3 seconds) when first engaging drive or reverse after allowing vehicle to sit overnight is normal.

Step	Action	Yes	No
1	Check line pressure. Refer to Line Pressure Test in this section. Was line pressure normal?	More than 3 second delay in drive and reverse with engine off 1 hour or less. Teflon seals (508) on turbine shaft damaged. Repair	Use Chart 15a: Possible Causes of Low Line Pressure in this section.

Chart 5b: Delays In Reverse Only

Step	Action	Yes	No
1	Check line pressure. Refer to Line Pressure Test in this section. Was line pressure normal?	Go to Step 2	Use Chart 15a: Possible Causes of Low Line Pressure in this section.
2	Main case valve body gasket (88) damaged. – Reverse check ball (85) in valve body (84) missing or out of location. – Check for restrictions at valve body transfer plate orifice. Was the problem found?	Repair	—

Downloaded from www.Manualslib.com manuals search engine

Chart 6: Diagnostic Trouble Code (DTC) P0730

Step	Action	Yes	No
1	Check line pressure. Refer to Line Pressure Test in this section. Was line pressure normal?	Go to Step 2	Use Chart 15b: Possible Causes of High Line Pressure in this section
2	1. 1st and 2nd gear missing or 3rd and 4th gear missing. Check appropriate shift valve. If OK replace solenoid. 2. No engine brake in any range (All ranges in Drive and Reverse are OK). Check for suspected conditions modifying delays to clutch apply: – Overrun clutch seal damaged. – Excessive overrun clutch piston travel. – Defective 3–4 accumulator piston. – Causes of internal leaks. – Causes of burned clutch plates. 3. 1st and 4th gear missing or 2nd and 3rd gear missing. Shift solenoid A stuck. Replace shift solenoid A. 4. DTC P0730 is set in D range 1st gear above 3500 rpm. Go to Step 3. 5. DTC P0730 is set in D range 3rd gear between 55-80 mph. NOTE: Perform this test within safe and legal limits. Check for suspected conditions modifying delays to clutch apply: – 4th clutch seal damaged. – Excessive 4th clutch piston travel. – Defective 3–4 accumulator piston. – Causes of internal leaks. – Causes of burned clutch plates. Was the problem found?	Repair or replace	—
3	Check 3rd gear in “D” in winter mode. Does vehicle move?	Shift solenoid A stuck. Replace shift solenoid A.	Go to Step 4
4	Check for suspected conditions modifying delays to clutch apply: – 2nd clutch seal damaged. – Excessive 2nd clutch piston travel. – Defective accumulator piston. – Causes of internal leaks. – Check ball missing or out of location in 2nd clutch. – Seals cut, damaged or missing. – Gaskets defective. – Causes of burned clutch plates. Was the problem found?	Repair or replace	—

Downloaded from www.Manualslib.com manuals search engine

Chart 7: Harsh 1–2 Shift

Step	Action	Yes	No
1	Check line pressure. Refer to Line Pressure Test in this section. Was line pressure normal?	Check for 1–2 accumulator valve (320) stuck by foreign material in main case valve body.	Use Chart 15b: Possible Causes of High Line Pressure in this section.

Chart 8: Harsh 3–4 Shift

Step	Action	Yes	No
1	Check line pressure. Refer to Line Pressure Test in this section. Was line pressure normal?	Go to Step 2	Use Chart 15b: Possible Causes of High Line Pressure in this section
2	1. Check for 3–4 accumulator valve (407) stuck in adapter case valve body (401). 2. Check for 3–4 accumulator piston (18) stuck in adapter case (20). Was the problem found?	Repair or replace	—

Chart 9a: 3–2 Downshift Complaint

Step	Action	Yes	No
1	Check line pressure. Refer to Line Pressure Test in this section. Was line pressure normal?	Go to Step 2	Use Chart 15a: Possible Causes of Low Line Pressure in this section
2	Does DTC P1850 set?	Diagnose P1850 first	Replace band apply solenoid (PWM) (323)

Chart 9b: Harsh Shift When Shifting Into “D” Or Accelerating From Stop

Step	Action	Yes	No
1	Check line pressure. Refer to Line Pressure Test in this section. Was line pressure normal?	Go to Step 2	Use Chart 15b: Possible Causes of High Line Pressure in this section
2	Does DTC P1850 set?	Diagnose P1850 first	Replace band apply solenoid (PWM) (323)

Downloaded from www.Manualslib.com manuals search engine

Chart 9c: Coastdown Harsh Shift Or Clunk At 3–2 Downshift

Step	Action	Yes	No
1	Check line pressure. Refer to Line Pressure Test in this section. Was line pressure normal?	Go to Step 2	Use Chart 15b: Possible Causes of High Line Pressure in this section
2	Does DTC P1850 set?	Diagnose P1850 first	Replace band apply solenoid (PWM) (323)

Chart 10: Intermittent 4TH TO 2ND Gear Downshift At Steady Speed

Step	Action	Yes	No
1	Check for consistent speed sensor reading with scan tool. Was the reading correct?	Replace mode switch for intermittent contact.	Go to Step 2
2	1. Check for wiring harness damage or short to ground. If OK, go to (2). 2. Check transmission speed sensor connections. If OK, go to (3). 3. Replace transmission speed sensor. Was the replacement complete?	—	Replace speed sensor.

Chart 11: Engine Flare At Shifting During Turning Only (Usually With Warm Engine)

Step	Action	Yes	No
1	Check for oil leaks at transmission. Was the problem found?	Replace transmission oil filter and gasket	—

Chart 12: Engine Flare During 1–2 Or 2–3 Shift

Step	Action	Yes	No
1	Check line pressure. Refer to Line Pressure Test in this section. Was line pressure normal?	Go to Step 2	Use Chart 15a: Possible Causes of Low Line Pressure in this section
2	1. Check for a stuck 1–2 accumulator valve (320). 2. Check for servo piston (106) leaks. 3. Check for a stuck band apply solenoid (323). Was line pressure normal?	Repair or replace	—

Downloaded from www.Manualslib.com manuals search engine

Chart 13: Shudder Only During Torque Converter Clutch (TCC) Applying

Step	Action	Yes	No
1	1. TCC shudder is one of the most commonly misdiagnosed conditions in an automatic transmission. The key to diagnosing TCC shudder is to note when it happens and under what conditions. Once the TCC has been fully applied, it is nearly impossible to make it shudder. TCC shudder (short burst of noise normally less than 1 second) will only occur during clutch applying. It is not a steady state condition. 2. Drive until whole drivetrain is at normal operating temperature. – On 4WD vehicles, the test must be performed with transfer case selector lever in “2H” position. – Shudder is a short burst of noise normally less than 1 second in duration, and can be induced by the following maneuver: 3. From coast condition at 50 mph in “D” range (Normal mode), depress the throttle to 1/4-1/3 throttle. If present, shudder will occur within 5 seconds together with TCC application.(The scan tool may be used to determine the exact time of TCC applying) Was the problem found?	Replace transmission fluid and filter (remove both pans) and flush cooler lines. Replace converter assembly and O-ring on turbine shaft	Perform mechanical inspection of other drivetrain components.

Chart 14: Possible Causes Of Transmission Noise

CAUTION: Before checking transmission for what is believed to be transmission noise, ensure presence and positioning of insulating plugs, pads etc. Also make sure that noise does not come from other drivetrain components.

Condition	Possible cause	Correction
Whine or Buzz	Oil level low	Fill with ATF, check for external leaks.
	Plugged or restricted oil filter	Inspect oil filter. Replace oil filter or ATF as necessary.
	Damaged oil filter gasket	Replace oil filter gasket.
Knocking noise from front of transmission.	Loose bolts (Converter to flex plate)	Tighten to specifications.
	Cracked or broken flex plate	Replace flex plate.
	Converter damaged	Replace converter.
Knocking noise while driving, mostly on acceleration.	Transmission mount loose or broken	Tighten mount bolts or replace transmission mount.
	Cooler line mounts loose or broken	Tighten or replace cooler line mounts.
	Cooler lines touching body or frame	Repair or replace as necessary.
Knocking noise when vehicle is stationary.	Loose flex plate mounting bolts	Tighten to specifications.
	Cracked or broken flex plate	Replace flex plate.
	Damaged converter	Replace converter.

Downloaded from www.Manualslib.com manuals search engine

Chart 15a: Possible Causes of Low Line Pressure

Step	Action	Yes	No
1	Check oil level. Was the problem found?	Fill with ATF	Go to Step 2
2	Check for defective throttle position sensor. Was the problem found?	Replace throttle position sensor	Go to Step 3
3	Check for plugged, loose, or damaged oil filter (79). Was the problem found?	Inspect oil filter, tighten bolts or replace oil filter (79)	Go to Step 4
4	Check for a stuck force motor plunger (404). (Adapter case valve body) Was the problem found?	Replace force motor plunger (404)	Go to Step 5
5	Check for a stuck feed limit valve (412). (Adapter case valve body) Was the problem found?	Replace feed limit valve (412)	Go to Step 6
6	Check for loose converter bolts (4 & 5). Was the problem found?	Tighten converter bolts (4 & 5)	Go to Step 7
7	Check for a stuck pressure regulator valve (217). (Oil pump) Was the problem found?	Replace pressure regulator valve (217)	Go to Step 8
8	Check for a stuck boost valve (213).(Oil pump) Was the problem found?	Replace boost valve (213)	Go to Step 9
9	Check for blocked intermediate oil passages to pressure regulator valve. (Oil pump) Was the problem found?	Replace oil pump	Go to Step 10
10	Check for defective oil pump (9, 201, 202 & 228). Was the problem found?	Replace oil pump	Go to Step 11
11	Check for internal leaks. – Check balls missing or out of location in valve bodies – Seals cut or damaged – Gaskets defective, etc. Was the problem found?	Install balls, or correct ball location Replace seals Replace gaskets	—

Downloaded from www.Manualslib.com manuals search engine

Chart 15b: Possible Causes Of High Line Pressure

NOTE: If transmission is operating in backup mode, high line pressure will be present.

Step	Action	Yes	No
1	Check for defective throttle position sensor. Was the problem found?	Replace throttle position sensor.	Go to Step 2.
2	Check for a stuck force motor plunger (404). (Open circuit/intermittent) (Adapter case valve body) Was the problem found?	Replace force motor plunger (404)	Go to Step 3
3	Check for a stuck feed limit valve (412). (Adapter case valve body) Was the problem found?	Replace force motor plunger (412)	Go to Step 4
4	Check converter bolts (4 & 5). Was the problem found?	Tighten converter bolts (4 & 5)	Go to Step 5
5	Check for a stuck pressure regulator valve (217). (Oil pump) Was the problem found?	Replace pressure regulator valve (217)	Go to Step 6
6	Check for a stuck boost valve (213). (Oil pump) Was the problem found?	Replace boost valve (213)	Go to Step 7
7	Check for internal leaks. – Check balls missing or out of location in valve bodies – Seals cut or missing – Gaskets defective, etc. Was the problem found?	Install balls, or correct ball location Replace seals Replace gaskets	—

Downloaded from www.Manualslib.com manuals search engine

Chart 16: Possible Causes Of Transmission Fluid Leaks

Before attempting to correct an oil leak, the actual source of the leak must be determined. In many cases, the source of the leak may be difficult to determine due to “wind flow” around the engine and transmission.
The suspected area should be wiped clean before inspecting for the source of the leak.

Oil leaks around the engine and transmission are generally carried toward the rear of the vehicle by the air stream. In determining the source of an oil leak, the following two checks should be made:

1. With the engine running, check for external line pressure leaks.
2. With the engine off, check for oil leaks due to the raised oil level caused by drainback of converter oil into the transmission.

Possible Causes Of Fluid Leaks Due To Sealing Malfunction

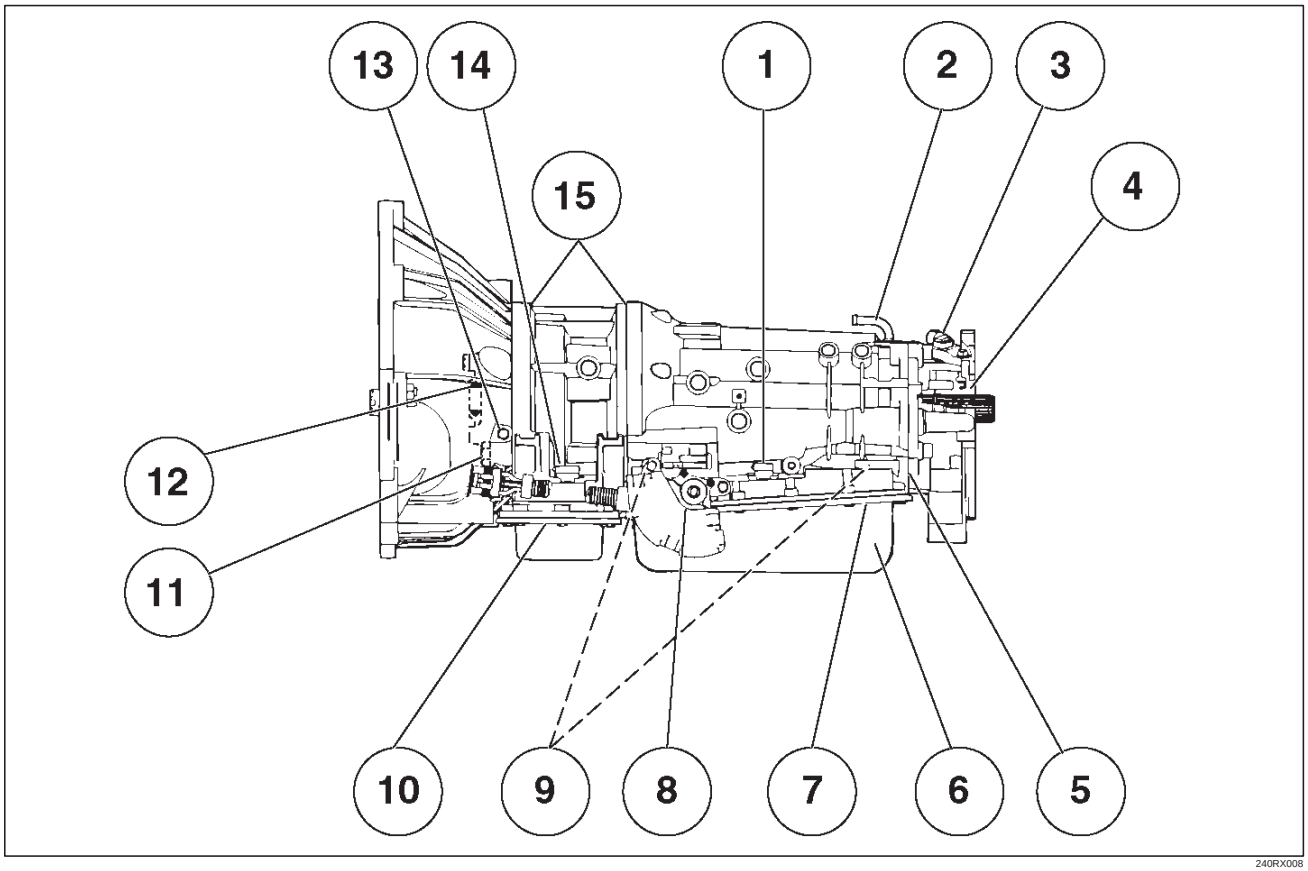

240RX008

Legend

(1) Electrical Connector (Main Case) Seal
(2) Transmission Vent (Breather)
(3) Speed Sensor O–Ring
(4) Extension (Adapter) Lip Seal
(5) Extension (Adapter) to Main Case Gasket
(6) Overfill and Oil Drain Screws Gasket
(7) Oil Pan Gasket (Main Case)
(8) Selector Shaft Seal
(9) Oil Cooler Connectors (2)
(10) Oil Pan Gasket (Adapter Case)
(11) Converter housing attaching bolts not correctly torqued
(12) Converter Housing Lip Seal
(13) Line Pressure Tap Plug
(14) Electrical Connector (Adapter Case) Seal
(15) Adapter Case Seal Rings (2)

Downloaded from www.Manualslib.com manuals search engine

Stall Test

The stall test allows you to check the transmission for internal abrasion and the one way clutch for slippage. Torque converter performance can also be evaluated. The stall test results together with the road test results will identify transmission components requiring servicing or adjustment.

Stall Test Procedure:

1. Check the level of the engine coolant, the engine oil, and the automatic transmission fluid. Replenish if necessary.
2. Block the wheels and set the parking brake.
3. Connect a tachometer to the engine.
4. Start the engine and allow it to idle until the engine coolant temperature reaches 70 – 80˚C (158 – 176˚F).
5. Hold the brake pedal down as far as it will go.
6. Place the selector in the “D” range.
7. Gradually push the accelerator pedal to the floor. The throttle valve will be fully open.

   Note the engine speed at which the tachometer needle stabilizes.

   Stall Speed : 2,100 ±150 rpm

NOTE: Do not continuously run this test longer than 5 seconds.

8. Release the accelerator pedal.
9. Place the selector in the “N” range.
10. Run the engine at 1,200 rpm for one minute. This will cool the transmission fluid.
11. Repeat Steps 7 – 10 for the “3”, “2”, “L” and “R” ranges.

Line Pressure Test

The line pressure test checks oil pump and control valve pressure regulator valve function. It will also detect oil leakage.

Line Pressure Test Procedure:

1. Check the level of the engine coolant, the engine oil, and the automatic transmission fluid. Replenish if required.
2. Block the wheels and set the parking brake.
3. Remove the pressure detection plug at the left side of the transmission case.

   Set J–29770–A pressure gauge and adapter to the pressure detection plug hole.

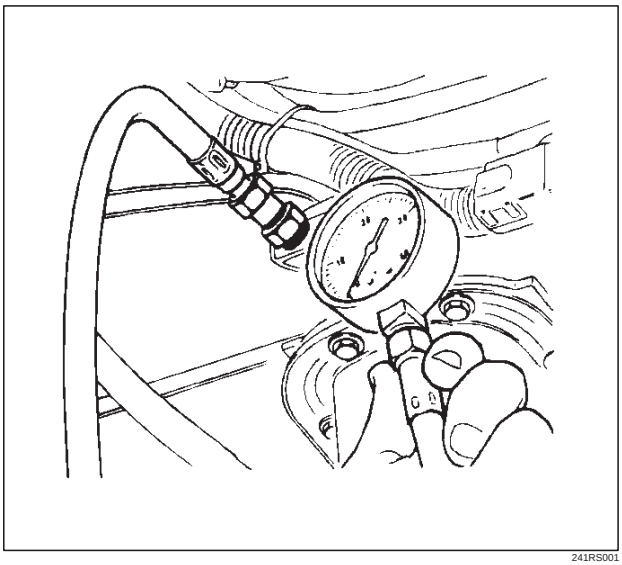

241RS001

4. Start the engine and allow it to idle until the engine coolant temperature reaches 70 – 80˚C (158 – 176˚F).
5. Hold the brake pedal down as far as it will go.
6. Place the selector in the “D” range.
7. Note the pressure gauge reading with the engine idling.
8. Gradually push the accelerator pedal to the floor. The throttle valve will be fully open.

   Note the pressure gauge reading with the accelerator pedal fully depressed.

NOTE: Do not continuously run this test longer than 5 seconds.

9. Release the accelerator pedal.
10. Place the selector in the “N” range.
11. Run the engine at 1,200 rpm for one minute. This will cool the transmission fluid.
12. Repeat Steps 7 – 11 for the “3”, “2”, “L”, and “R” ranges.
13. Install a pressure detection plug to the transmission case, applying recommended thread locking agent (LOCTITE 242) or its equivalent to thread of plug. Make sure that thread is cleaned before applying locking agents.
14. Tighten the pressure detection plug to the specified torque.

    Torque: 9 – 14N·m (7 – 10lb ft)

Downloaded from www.Manualslib.com manuals search engine

MODE	LEVER POSITION	ENGINE SPEED	LINE PRESSURE		FORCE MOTOR CURRENT (mA)
			kPa	PSI	
NORMAL/POWER	D,3,2,L	IDLE	590 – 730	86 – 106	680 – 720
WINTER	D	IDLE	300 – 390	44 – 57	1,020 – 1,060
NORMAL/POWER WINTER	REVERSE	IDLE	460 – 630	67 – 91	880 – 920
NORMAL/POWER	D, 3, 2, L	STALL SPEED	1,250 – 1,380	181 – 200	70 – 110
WINTER	D	STALL SPEED	1,250 – 1,380	181 – 200	70 – 110
NORMAL/POWER WINTER	REVERSE	STALL SPEED	1,400 – 1,580	203 – 229	340 – 380

Shift Speed Chart

Transfer gear ratio:	High: 1.000
Rear axle ratio:	4.300

“Normal mode”

Upshift

Range	Throttle opening	1 → 2 (First Gear) (Second Gear) km/h (mph)	2 → 3 (Second Gear) (Third Gear) km/h (mph)	3 → 4 (Third Gear) (Fourth Gear) km/h (mph)
D (Drive)	Fully opened	53 ~ 59 (33 ~ 37)	110 ~ 116 (68 ~ 72)	166 ~ 172 (103 ~ 107)
	Half throttle	32 ~ 38 (20 ~ 24)	57 ~ 63 (35 ~ 39)	99 ~ 105 (61 ~ 65)
3 (Third)	Fully opened	53 ~ 59 (33 ~ 37)	110 ~ 116 (68 ~ 72)	—
	Half throttle	32 ~ 38 (20 ~ 24)	57 ~ 63 (35 ~ 39)	—
2 (Second)	Fully opened	53 ~ 59 (33 ~ 37)	—	—
	Half throttle	32 ~ 38 (20 ~ 24)	—	—

Downshift

Range	Throttle opening	1 ← 2 (First Gear) (Second Gear) km/h (mph)	2 ← 3 (Second Gear) (Third Gear) km/h (mph)	3 ← 4 (Third Gear) (Fourth Gear) km/h (mph)
D (Drive)	Fully opened	45 ~ 51 (28 ~ 32)	87 ~ 93 (54 ~ 58)	155 ~ 161 (96 ~ 100)
	Half throttle	14 ~ 20 (9 ~ 12)	33 ~ 39 (20 ~ 24)	64 ~ 70 (40 ~ 43)
	Fully closed	13 ~ 19 (8 ~ 12)	19 ~ 25 (12 ~ 16)	27 ~ 33 (17 ~ 21)
3 (Third)	Fully opened	45 ~ 51 (28 ~ 32)	87 ~ 93 (54 ~ 58)	—
	Half throttle	14 ~ 20 (9 ~ 12)	33 ~ 39 (20 ~ 24)	—
	Fully closed	13 ~ 19 (8 ~ 12)	19 ~ 25 (12 ~ 16)	—
2 (Second)	Fully opened	45 ~ 51 (28 ~ 32)	92 ~ 98 (57 ~ 61)	—
	Half throttle	14 ~ 20 (9 ~ 12)	92 ~ 98 (57 ~ 61)	—
	Fully closed	13 ~ 19 (8 ~ 12)	92 ~ 98 (57 ~ 61)	—
L (First)	—	48 ~ 54 (30 ~ 34)	—	—

Downloaded from www.Manualslib.com manuals search engine

“Power mode”

Upshift

Range	Throttle opening	1 → 2 (First Gear) (Second Gear) km/h (mph)	2 → 3 (Second Gear) (Third Gear) km/h (mph)	3 → 4 (Third Gear) (Fourth Gear) km/h (mph)
D (Drive)	Fully opened	53 ~ 59 (33 ~ 37)	110 ~ 116 (68 ~ 72)	174 ~ 180 (108 ~ 112)
	Half throttle	41 ~ 47 (25 ~ 29)	84 ~ 90 (52 ~ 56)	136 ~ 142 (84 ~ 88)
3 (Third)	Fully opened	53 ~ 59 (33 ~ 37)	110 ~ 116 (68 ~ 72)	—
	Half throttle	41 ~ 47 (25 ~ 29)	84 ~ 90 (52 ~ 56)	—
2 (Second)	Fully opened	53 ~ 59 (33 ~ 37)	—	—
	Half throttle	41 ~ 47 (25 ~ 29)	—	—

Downshift

Range	Throttle opening	1 ← 2 (First Gear) (Second Gear) km/h (mph)	2 ← 3 (Second Gear) (Third Gear) km/h (mph)	3 ← 4 (Third Gear) (Fourth Gear) km/h (mph)
D (Drive)	Fully opened	45 ~ 51 (28 ~ 32)	104 ~ 110 (65 ~ 68)	163 ~ 169 (101 ~ 105)
	Half throttle	22 ~ 28 (14 ~ 17)	57 ~ 63 (35 ~ 39)	108 ~ 114 (67 ~ 71)
	Fully closed	13 ~ 19 (8 ~ 12)	23 ~ 29 (14 ~ 18)	46 ~ 52 (29 ~ 32)
3 (Third)	Fully opened	45 ~ 51 (28 ~ 32)	104 ~ 110 (65 ~ 68)	—
	Half throttle	22 ~ 28 (14 ~ 17)	57 ~ 63 (35 ~ 39)	—
	Fully closed	13 ~ 19 (8 ~ 12)	23 ~ 29 (14 ~ 18)	—
2 (Second)	Fully opened	45 ~ 51 (28 ~ 32)	92 ~ 98 (57 ~ 61)	—
	Half throttle	22 ~ 28 (14 ~ 17)	92 ~ 98 (57 ~ 61)	—
	Fully closed	13 ~ 19 (8 ~ 12)	92 ~ 98 (57 ~ 61)	—
L (First)	—	48 ~ 54 (30 ~ 34)	—	—

“Winter mode”

D range, winter mode ON → OFF	31 ~ 37 km/h (19 ~ 23 mph)

Downloaded from www.Manualslib.com manuals search engine

Lockup Speed Chart

Transfer gear ratio	High: 1.000
Rear axle ratio	4.300

	Mode	ECCC Apply			ECCC Release		
		2nd Km/h (mph)	3rd Km/h (mph)	4th Km/h (mph)	2nd Km/h (mph)	3rd Km/h (mph)	4th Km/h (mph)
D range Throttle opening 6%	Normal	57 ~ 63 (35 ~ 39)	42 ~ 48 (26 ~ 30)	43 ~ 49 (27 ~ 31)	52 ~ 58 (32 ~ 36)	32 ~ 38 (20 ~ 24)	41 ~ 47 (25 ~ 29)
	Power	57 ~ 63 (35 ~ 39)	67 ~ 73 (42 ~ 45)	57 ~ 63 (35 ~ 39)	52 ~ 58 (32 ~ 36)	32 ~ 38 (20 ~ 24)	49 ~ 55 (30 ~ 34)

Downloaded from www.Manualslib.com manuals search engine

Changing Transmission Fluid

There is no need to change the transmission fluid unless the transmission is used under one or more of the following heavy duty conditions.

A. Repeated short trips

B. Driving on rough roads

C. Driving on dusty roads

D. Towing a trailer

If the vehicle is used under these conditions, change the fluid every 20,000 miles (32,000 km).

1. Place a large drain pan under the oil pan.
2. Remove the transmission oil drain screw (2) and drain fluid.
3. Tighten drain screw (2).

   Torque: 38 N•m (28 lb ft)
4. Remove the transmission overfill screw (1) and fill transmission through overfill screw opening, using DEXRON®–III ATF.

NOTE: Add transmission fluid until it flows out over the overfill screw opening.

5. Let engine idle until a fluid temperature between 32˚C (90˚F) and 57˚C (135˚F) is reached.
6. Add transmission fluid until it flows out over the overfill screw opening, then close the overfill screw (1).

   Torque: 38 N•m (28 lb ft)

NOTE: To prevent fluid leaks, the overfill screw and oil drain screws gasket must be replaced each time these screws are removed.

NOTE: Check transmission fluid temperature with service scan tool.

7. Reset “Oil Life Monitor” data by using Tech 2.
   Refer to Tech 2 OBD II Connection in Transmission Control System (4L30-E) section.

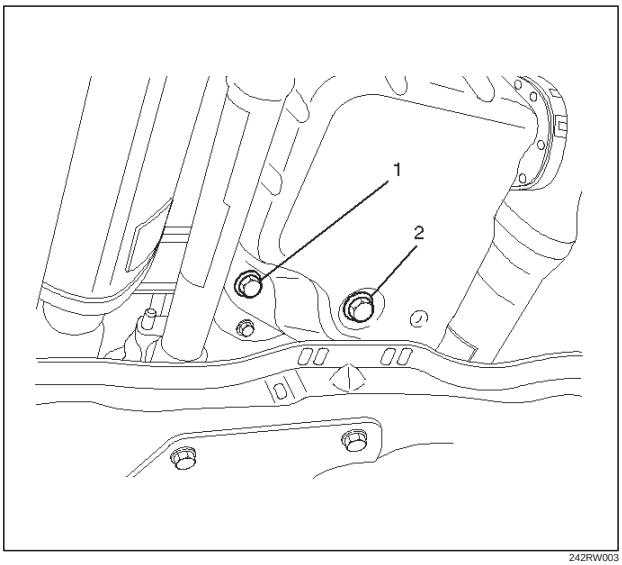

242RW003

Selector Lever

Inspection

1. Make sure that when the selector lever is shifted from “P” to “L”, a “clicking” can be felt at each shift position. Make sure that the gear corresponds to that of the position plate indicator.
2. Check to see if the selector lever can be shifted as shown in illustration.

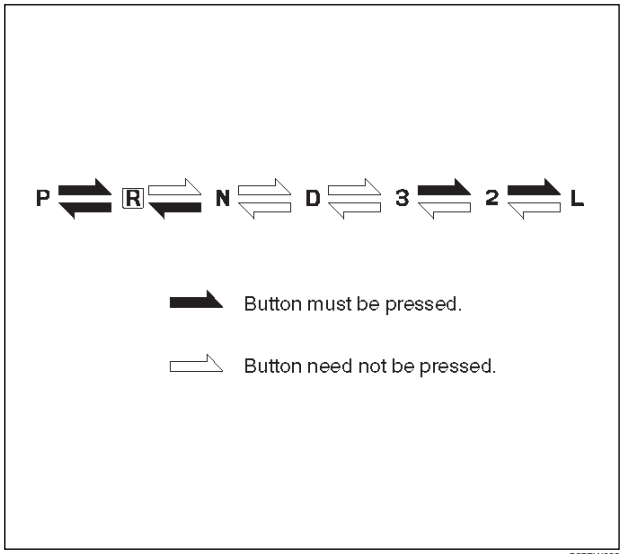

C07RW009

Removal

1. Disconnect battery ground cable.
2. Remove transfer control lever knob (4×4).
3. Remove front console.
   - Disconnect wiring harness connectors from front console.
4. Disconnect shift lock cable (1) from the selector lever assembly side.

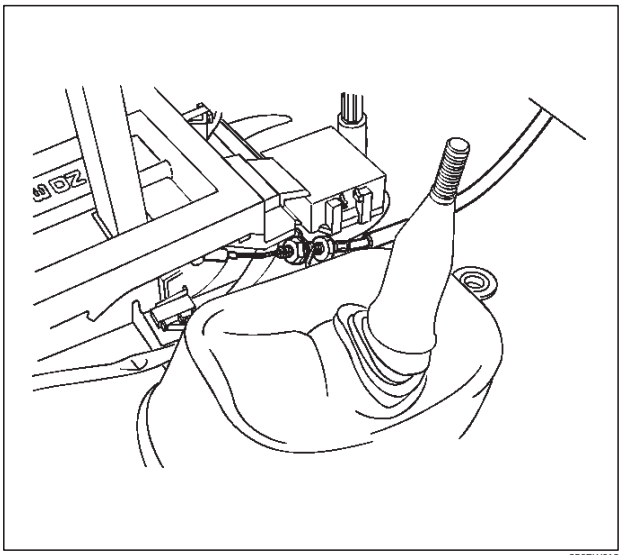

256RW012

Downloaded from www.Manualslib.com manuals search engine

5. Disconnect shift control rod (2) from the selector lever assembly side.

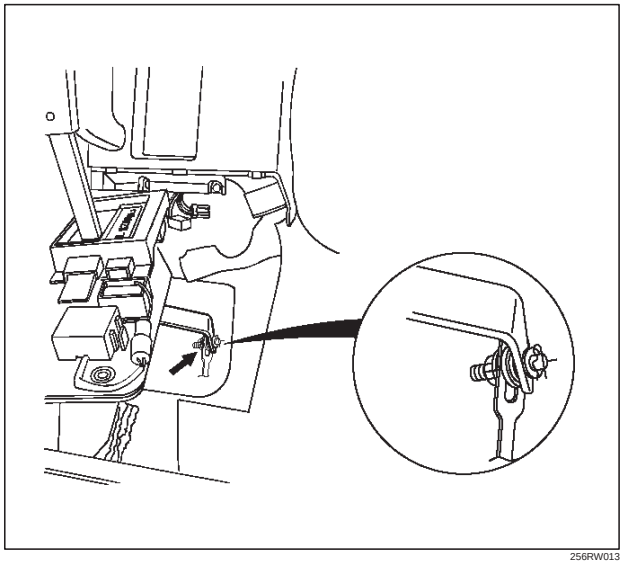

256RW013

6. Disconnect wiring harness connectors from the selector lever assembly.
7. Remove selector lever assembly.

Installation

To install, follow the removal steps in the reverse order, noting the following points:

Adjustment of select lever and control rod

1. Place the vehicle on a level surface.

NOTE: If the vehicle is not on level surface, the shift select cable set positions will vary with the movement of engine. To prevent possible misadjustment of the cable, the vehicle must be placed on a level surface.

2. Install the shift control rod (1) to the transmission select lever (2), and then place the lever in the “N” position.
3. Set select lever in the “N” position.
4. Push select lever forward (“R” position side) and secure it (using a rubber band (3), etc.) so that the pin comes into contact with the wall of the detent plate.
5. Install the shift control rod (1) to the selector lever arm (4).

Torque: 32 N•m (24 lb ft)

NOTE: Do not apply oil to the threaded portions.

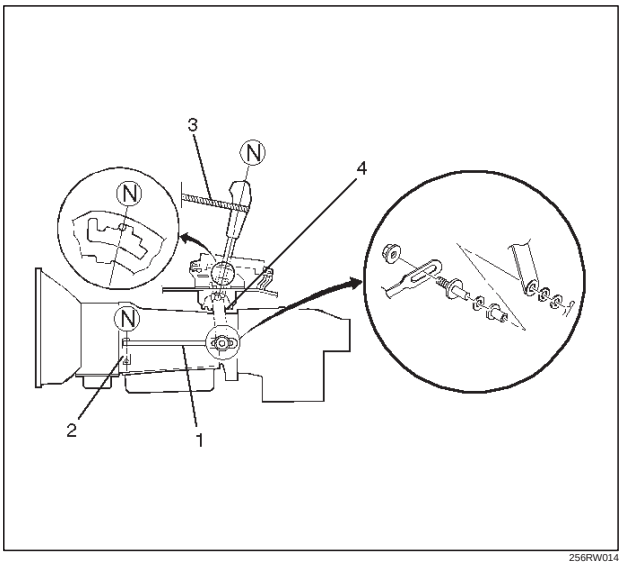

256RW014

6. After adjustment, make sure that the selector lever operates normally, and that each selector position is properly indicated. (The red mark shows through the window.)

Adjustment of shift lock cable

1. Set ignition key in “LOCK” position and selector lever in “P” position.
2. Adjust cable screw cap on selector lever side to provide a gap (slack for cable) of 1 – 2 mm between rod on steering lock side and stopper.

   Adjust cap as follows:

   a. Pull screw cap (1) in arrow direction to remove inner cable slack.
   b. With cable kept as (a), adjust gap between nut (2) and bracket to 5 mm (0.2 in).
   c. Lock inner cable by turning nut (3) while holding nut (2) in place.

Torque : 3.7 N•m (33 lb in)

NOTE: Clean the cable threads, and do not apply oil to them.

Downloaded from www.Manualslib.com manuals search engine

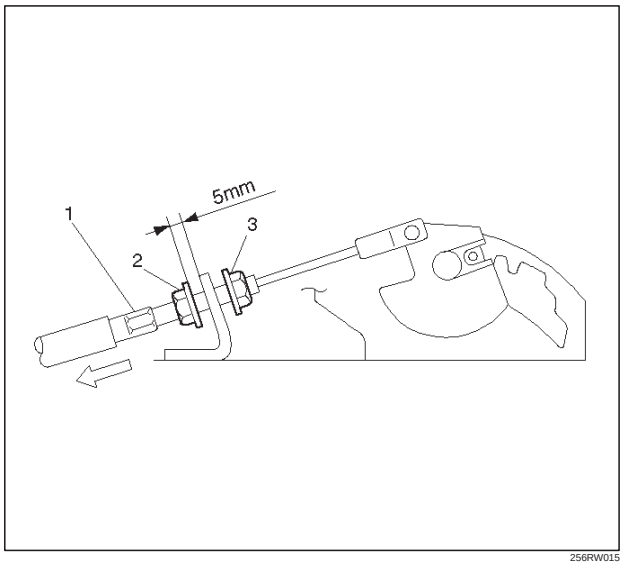

256RW015

3. Check the shift lock operation:
   a. Selector lever should not move out of “P” position with ignition key in “Lock” position.
   b. Selector lever can be moved out of “P” position with ignition key in “ON” position only when brake pedal is depressed.
   c. Ignition key can be turned to “LOCK” position only when selector lever is in “P” position (key can be pulled out).

   If (a) and (c) fail, readjust cable. If (b) fails, readjust connector wiring and brake pedal switch.

Mode Switch

Removal

1. Place selector lever in neutral.
2. Disconnect battery ground cable.
3. Remove mode switch cover (1).
4. Disconnect selector lever (2) from the mode switch.
5. Disconnect transmission harness from the mode switch connector (3).
6. Remove bracket with mode switch connector from the transmission case.
7. Remove mode switch connector (3) from the bracket (4).
8. Remove two mode switch bolts and nut then remove mode switch (5).

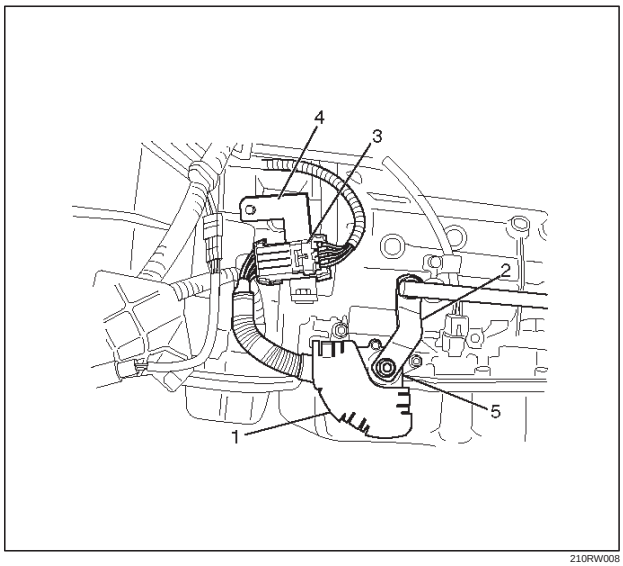

210RW008

Installation

To install, follow the removal steps in the reverse order, noting the following points;

1. Torque

   Mode switch bolt: 13 N•m (113 lb in)

   Selector lever nut: 23 N•m (17 lb ft)

2. Mode switch setting procedure

   Perform either of the following adjustment procedures:

   Procedure 1

   a. Place selector lever in neutral.
   b. Remove selector lever from the mode switch.
   c. Remove the mode switch cover.
   d. Loosen the two 10 mm screws.
   e. Rotate the mode switch until the slot in the mode switch housing aligns with the selector shaft bushing, and insert a 3/32 in. (2.4 mm) drill bit or punch (1) into the slot.
   f. Tighten the screws to 13 N·m (113 lb in).
   g. After completing adjustment, snap the mode switch cover into place.
   h. Reinstall the selector lever.

Downloaded from www.Manualslib.com manuals search engine

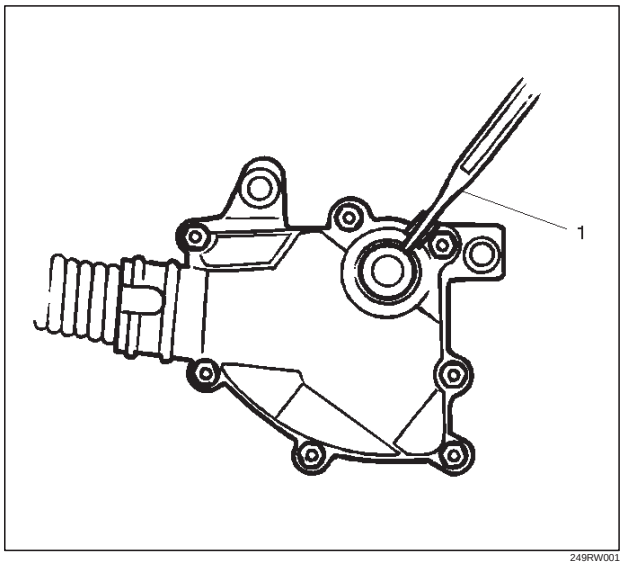

249RW001

Procedure 2

a. Place selector lever in neutral.
b. Disconnect transmission harness connector from mode switch connector.
c. Remove mode switch connector with bracket from the transmission case.
d. Connect multimeter (resistance mode) to terminals 1(E) and 4(H) on mode switch connector.
e. Loosen two mounting screws.
f. Rotate mode switch slightly in both directions to determine the range (approx. 5 degrees) of electrical contact.
g. Position mode switch in middle of contact range.
h. Tighten two mounting screws.
i. Remove multimeter and install mode switch harness connector with bracket to the transmission case.
j. Connect transmission harness connector to mode switch connector.

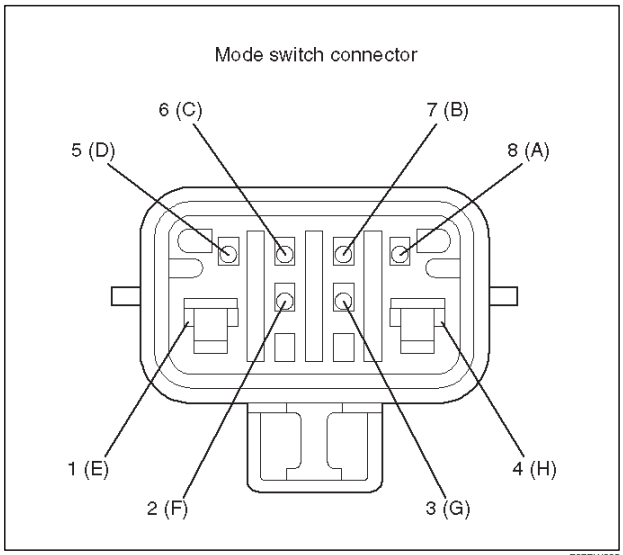

F07RW003

Downloaded from www.Manualslib.com manuals search engine

Transmission (With Transfer Case / Extension Assembly)

Transmission And Associated Parts

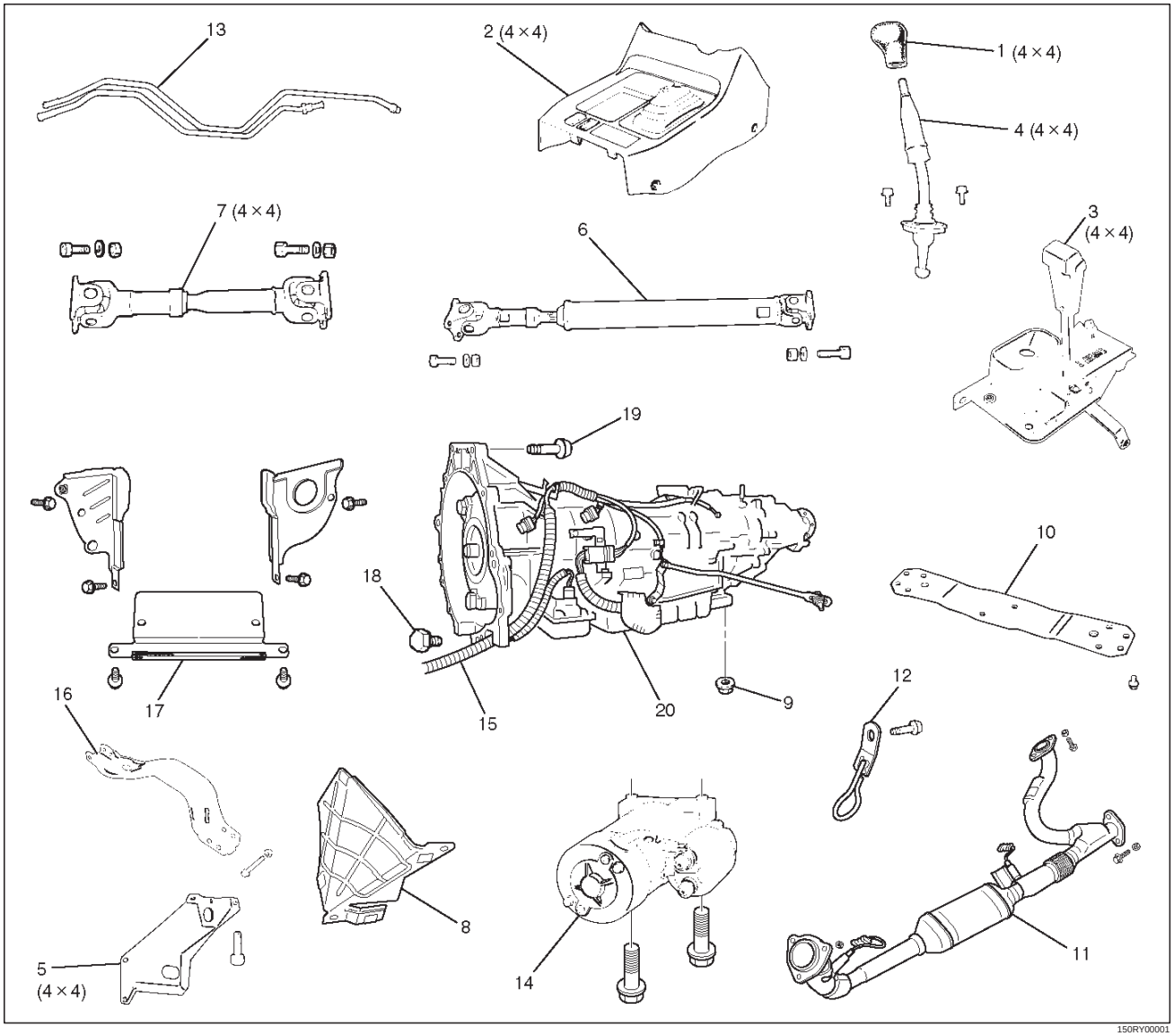

150RY00001

Legend

(1) Transfer Control Lever Knob (4×4)
(2) Front Console
(3) Selector Lever Assembly
(4) Transfer Control Lever (4×4)
(5) Transfer Protector (4×4)
(6) Rear Propeller Shaft
(7) Front Propeller Shaft (4×4)
(8) Harness Protector
(9) Rear Mount Nut
(10) Third Crossmember
(11) Left Catalytic Converter Assembly
(12) Seat Belt Tension Rod
(13) Transmission Oil Cooler Pipe
(14) Starter
(15) Transmission Harness Connector
(16) Front Crossmember
(17) Under Cover
(18) Torque Converter Bolt
(19) Engine Transmission Bolt
(20) Transmission Assembly (With Transfer Case / Extension Assembly)

Downloaded from www.Manualslib.com manuals search engine

Removal

NOTE: Before remove transmission and transfer assembly from vehicle, change the tansfer mode to 2WD using push button on dash panel.

1. Remove engine hood.
2. Disconnect battery ground cable.
3. Remove transfer control lever knob (1) (4×4) and disconnect wiring harness connectors, then remove front console (2).
4. Remove selector lever assembly (3).
5. Remove transfer control lever (4) (4×4).
6. Remove transfer protector (5) (4×4).
7. Disconnect shift control rod from the selector lever assembly side.

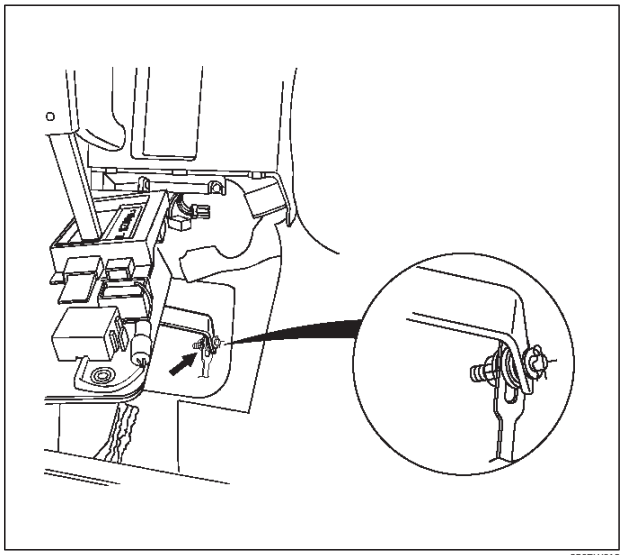

256RW013

8. Remove rear propeller shaft (6).
9. Remove front propeller shaft (7) (4×4).
10. Remove harness protector (8).
11. Support transfer case (4×4) or transmission (4×2) with a jack and remove two rear mount nuts (9) from the 3rd crossmember side.
12. Remove eight third crossmember bolts and third crossmember (10).
13. Remove front exhaust silencer mounting nuts.
14. Remove left seat belt tension rod.
15. Disconnect two left side oxygen sensor connectors from the transmission harness.

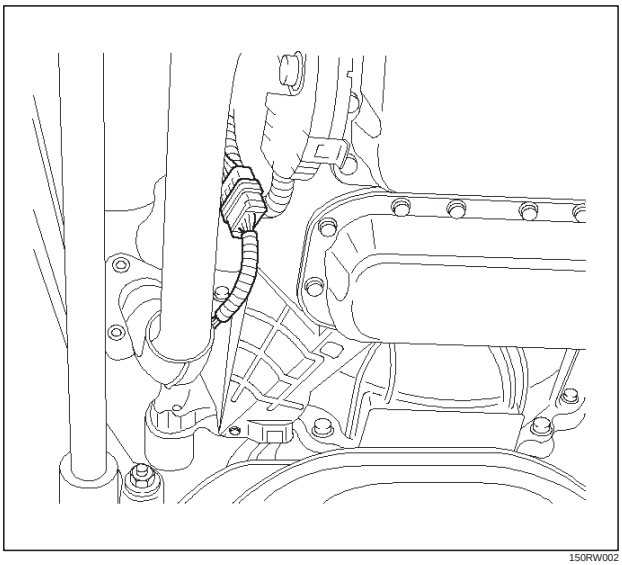

150RW002

16. Remove left catalytic converter assembly (11).
17. Loosen right catalytic converter nuts to exhaust manifold.

NOTE: This will make the next steps easier.

18. Disconnect transmission oil cooler pipe (12) from A/T side.
19. Remove oil pipe clamp from torque converter housing bracket.

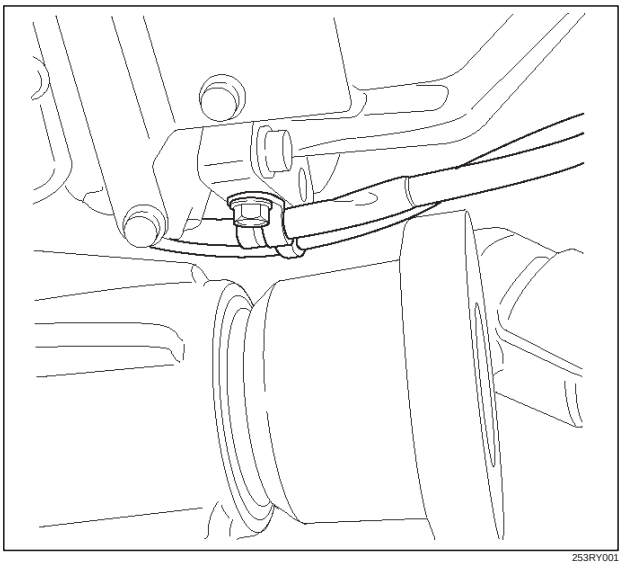

253RY001

20. Loosen oil pipe clamp bolt at the engine mount side.
21. Remove starter (14).
22. Disconnect fuel pipe clamp brackets from transmission side.
23. Disconnect transmission harness connectors (15) from transmission, transfer, and right catalytic converter.
24. Remove front crossmember (16).
25. Remove under covers (3 pieces) (17) from transmission case.
26. Remove flex plate torque converter fixing bolts (6 pieces) (18) by turning crankshaft.

Downloaded from www.Manualslib.com manuals search engine

27. Support the transmission with a transmission jack, and hoist engine with a chain block.
28. Remove engine transmission fixing bolts (19).
29. Remove transmission assembly with transfer case (4×4) / extension assembly (4×2) (20).
30. Remove transfer case / extension assembly from the transmission assembly if necessary.

Installation

1. Slowly raise transmission jack until front of the transmission is aligned with rear of the engine, then install transmission assembly.
2. Tighten engine transmission bolts, to the specified torque.

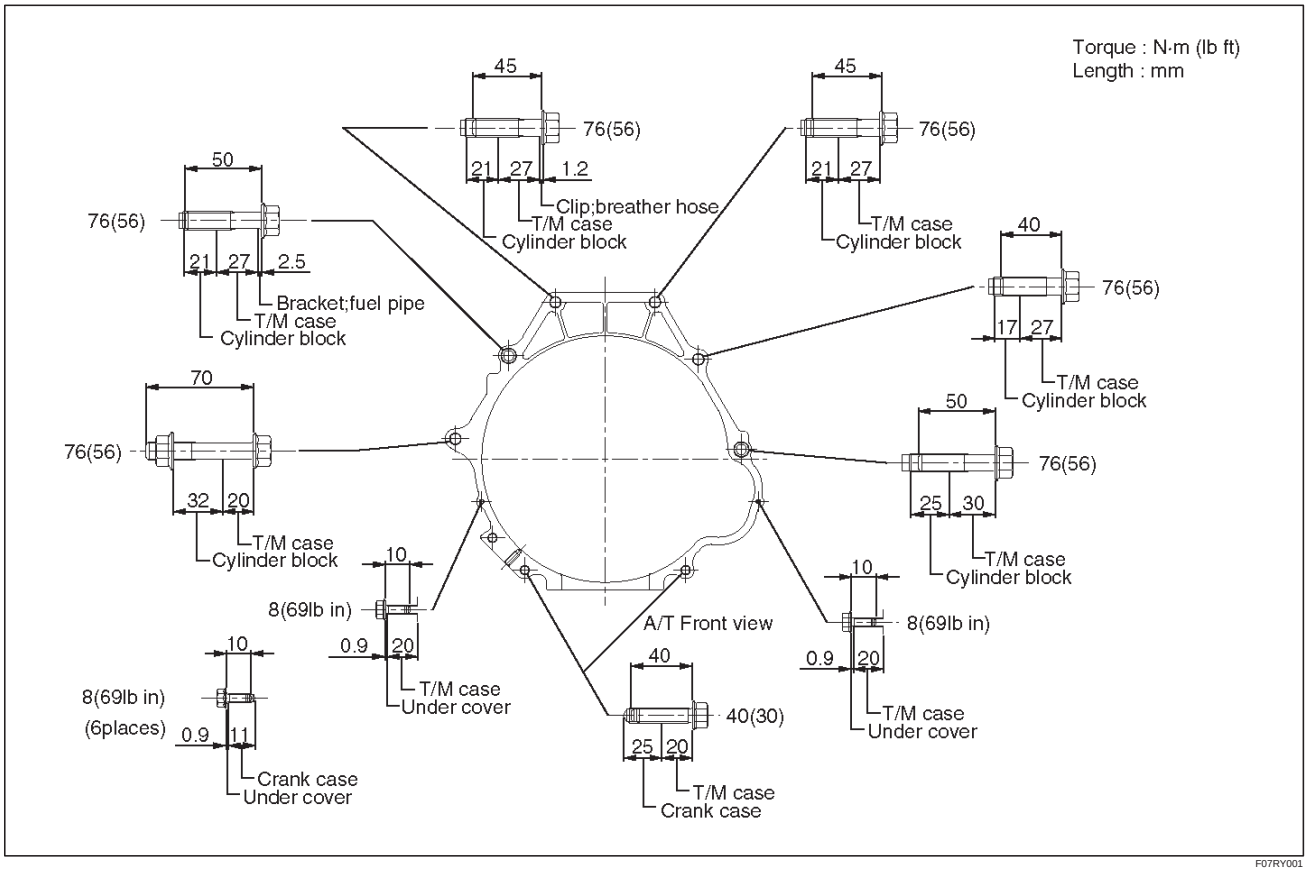

F07RY001

3. Support transfer case with a jack, and remove the transmission jack.
4. Install flex plate torque converter bolts (6 pieces) by turning crankshaft.

Torque: 54 N•m (40 lb ft)

NOTE: Do not reuse the flex plate torque converter bolt.

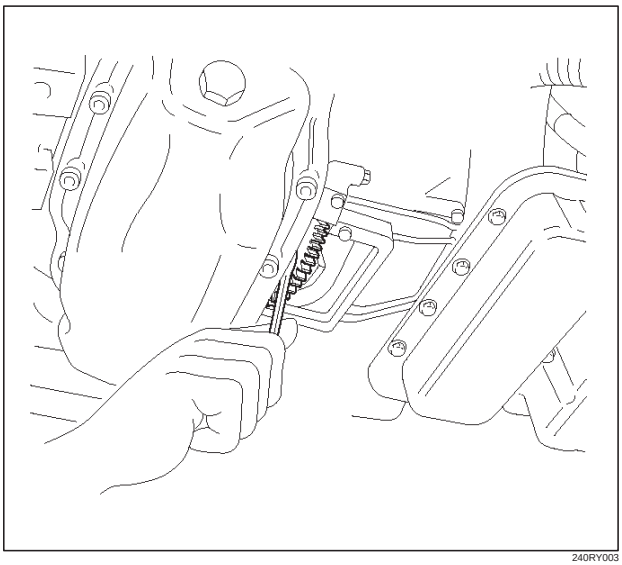

240RY003

Downloaded from www.Manualslib.com manuals search engine

5. Install the under cover (3 pieces), and tighten the bolts to the specified torque.

   Torque: 8 N•m (69 lb in)

6. Install front crossmember.

   Torque: 78 N•m (58 lb ft)

7. Install the starter, and tighten the bolts to the specified torque.

   Torque: 40 N•m (30 lb ft)

8. Connect transmission harness connectors to transmission, transfer, and right catalytic converter.
9. Connect fuel pipe brackets to transmission side.

For 4×4 (TOD)

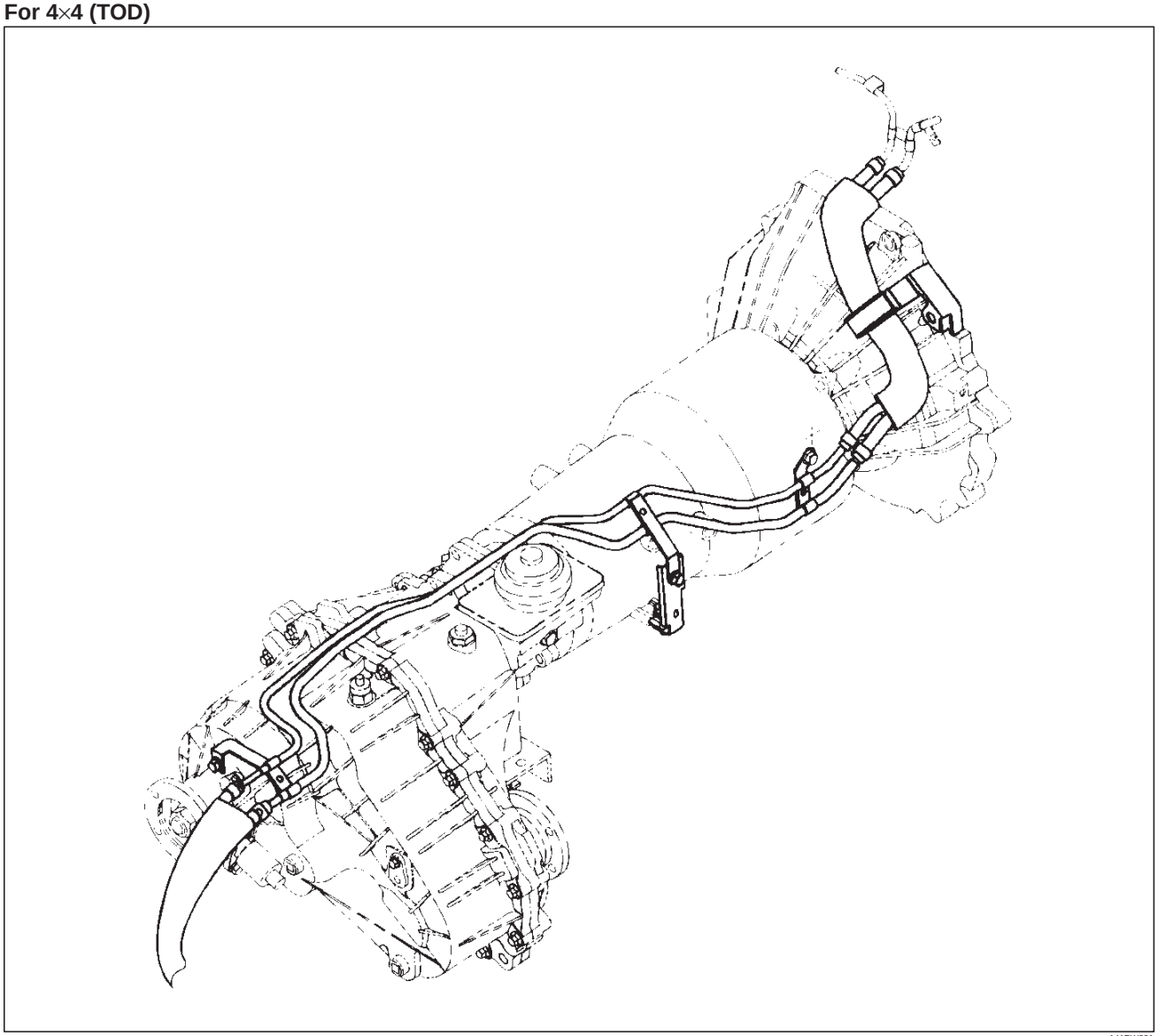

141RW001

Downloaded from www.Manualslib.com manuals search engine

For 4×4

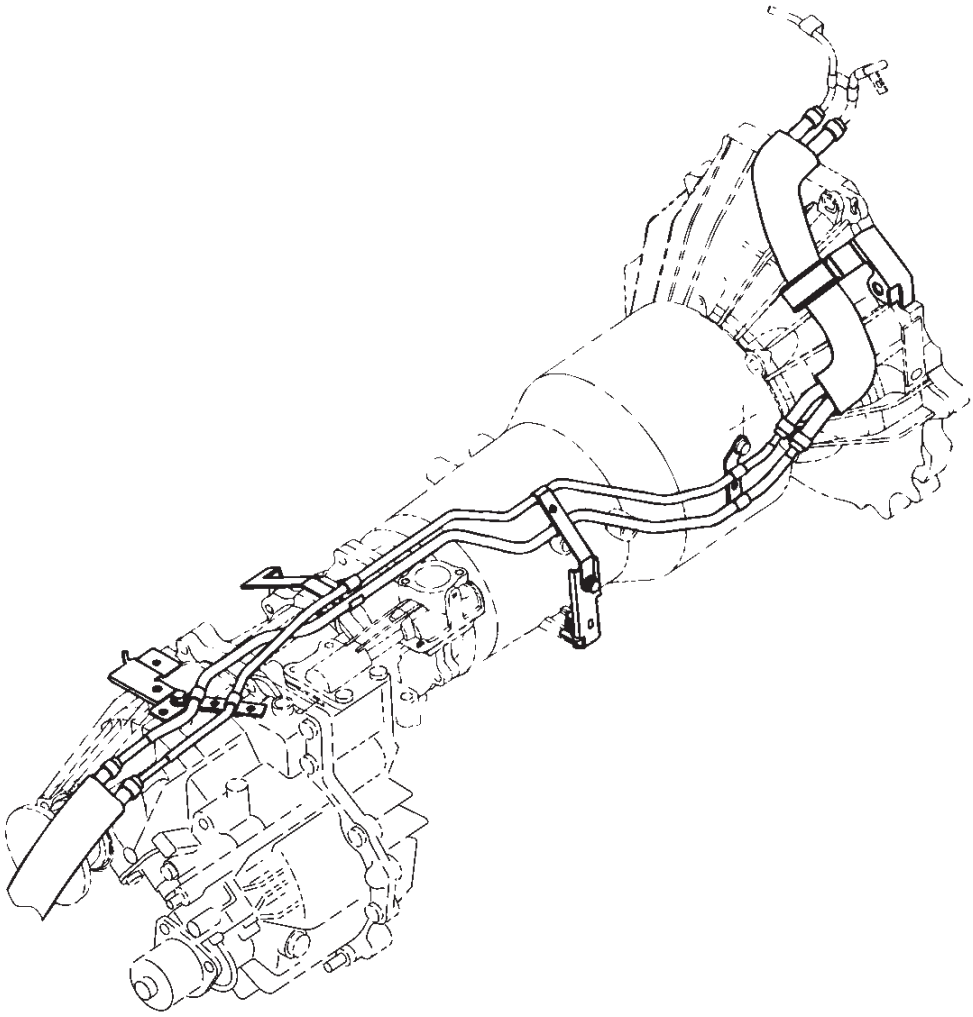

141RW027

Downloaded from www.Manualslib.com manuals search engine

For 4×2

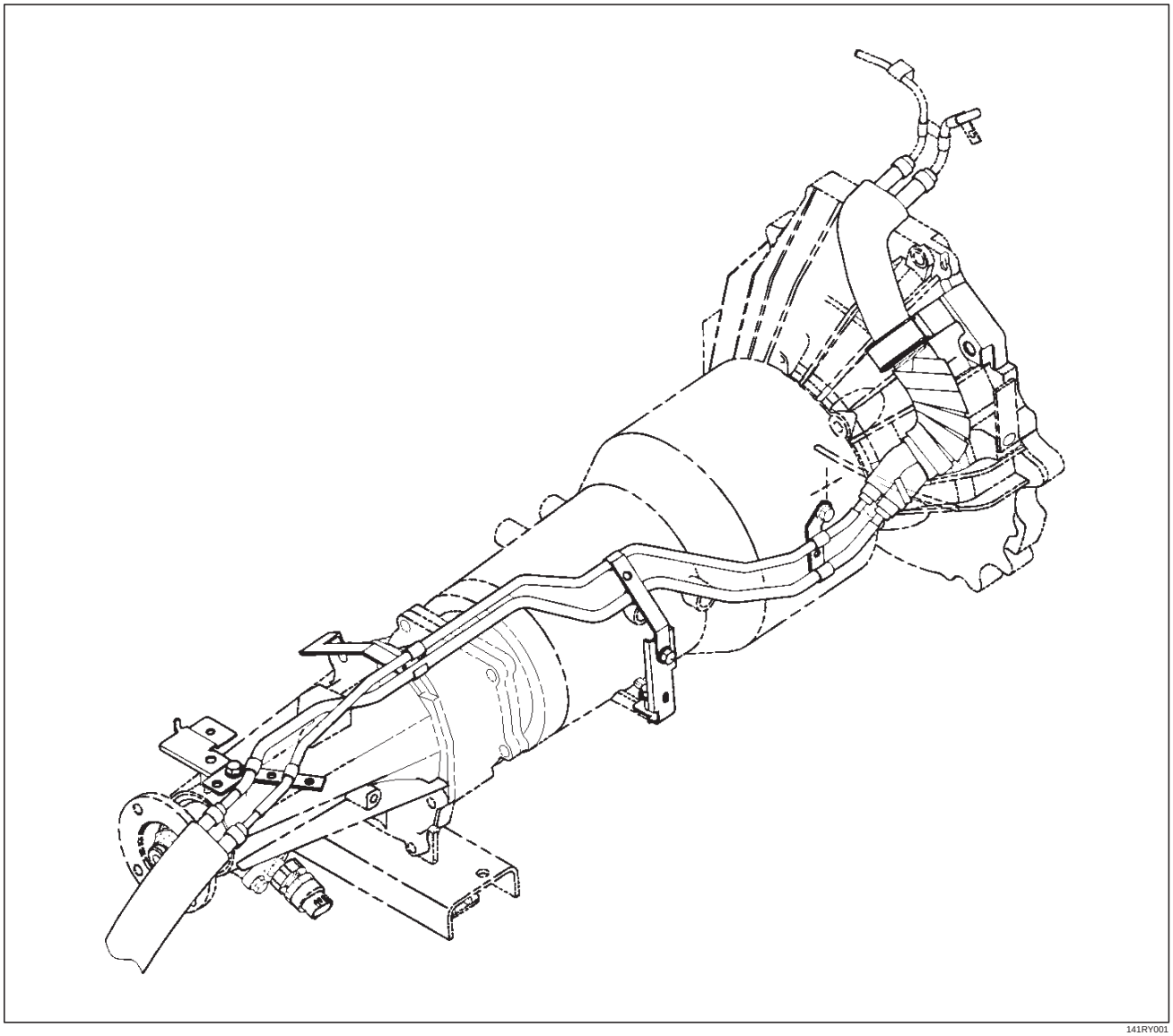

141RY001

10. Install transmission oil cooler pipe to transmission.

    Torque: 44 N•m (33 lb ft)

11. Install oil pipe clamp to torque converter housing bracket.
12. Tighten oil pipe clamp bolt at engine mount side.
13. Install right catalytic converter, tighten to the specified torque.

    Torque: 67 N•m (49 lb ft)

14. Install left catalytic converter assembly, and tighten the bolts to the specified torque.

    Exh. pipe to exh. manifold 67 N•m (49 lb ft)

    Exh. pipe flange bolt 43 N•m (32 lb ft)

15. Install left seat belt tension rod.

    Torque: 39 N•m (29 lb ft)

16. Connect two left side oxygen sensor connectors to the transmission harness.
17. Install front exhaust silencer mounting nuts.
18. Install third crossmember, and tighten the bolts to the specified torque.

    Torque: 76 N•m (56 lb ft)

19. Install rear mount nuts, and tighten the bolts to the specified torque.

    Torque: 50 N•m (37 lb ft)

20. Remove the jack from the transfer case.

Downloaded from www.Manualslib.com manuals search engine

21. Install harness protector.

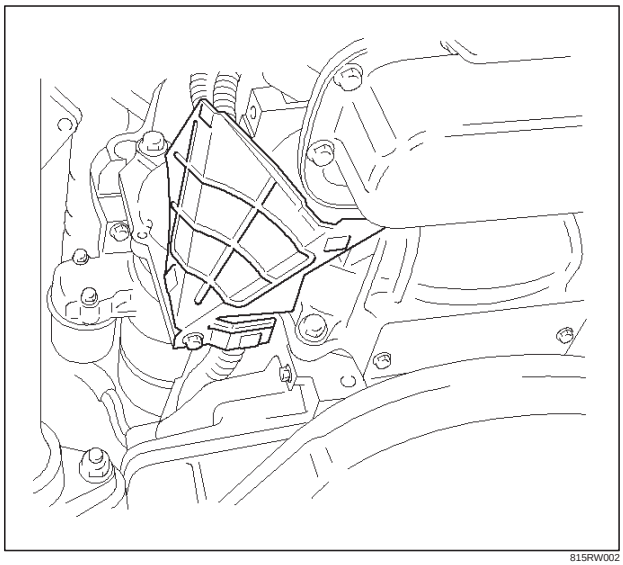

815RW002

22. Install the front propeller shaft, and tighten the bolts to the specified torque (4×4).

    Torque: 63 N•m (46 lb ft)

23. Install the rear propeller shaft, and tighten the bolts to the specified torque.

    Torque: 63 N•m (46 lb ft)

24. Connect the shift control rod to selector lever assembly.
25. Install the transfer protectors, and tighten the bolts to the specified torque (4×4).

    Torque: 37 N•m (27 lb ft)

26. Install the transfer control lever (4×4).
27. Install the selector lever assembly.
28. Connect the wiring harness connectors to front console.
29. Install the front console.
30. Install the transfer control lever knob (4×4).
31. Connect the battery ground cable.
32. Install the engine hood.

Downloaded from www.Manualslib.com manuals search engine

Solenoid (Main Case Valve Body)

Removal

1. Raise the vehicle and support it on jack stands.
2. Disconnect battery ground cable.
3. Remove transfer protector (4×4).
4. Drain fluid.
5. Support transfer case with a jack and remove third crossmember.
6. Remove sixteen 10 mm screws, main case oil pan, magnet, and gasket.
7. Remove three 13 mm screws, oil filter.
8. Disconnect wiring harness from band control solenoid and shift solenoids. Pull only on connectors, not on wiring harness.
9. Remove spring pin for shift solenoid A, shift solenoid B, and band control solenoid respectively, using suitable pliers taking care not to damage solenoids.

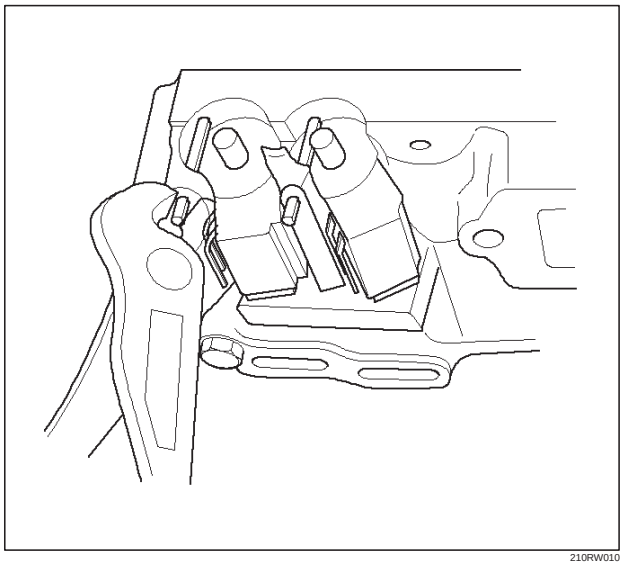

210RW010

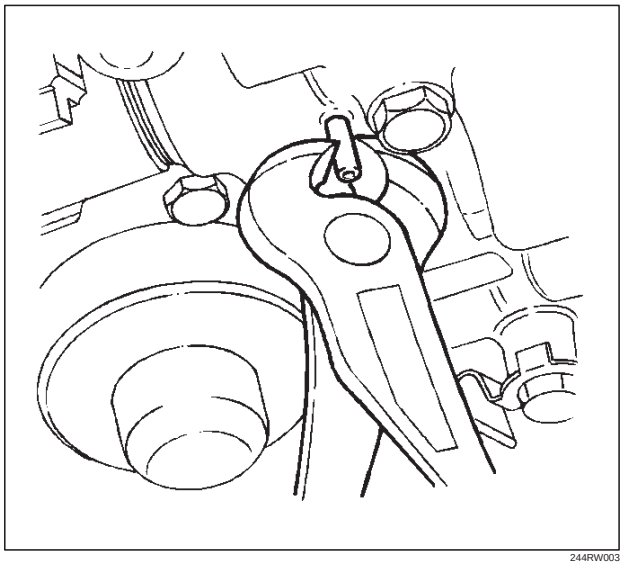

244RW003

10. Remove shift solenoid A, shift solenoid B, band control solenoid, and gaskets from main case valve body. Do not pull on wiring harness. Remove solenoids by grasping the metal tip.

Installation

1. Install shift solenoid A, shift solenoid B, band control solenoid with new gaskets to main case valve body respectively.
2. Carefully install spring pin with hammer to avoid damage to valve body, etc.

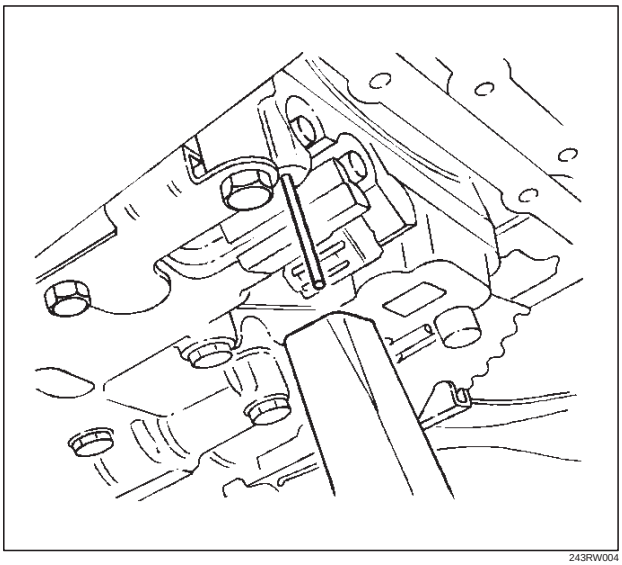

243RW004

3. Connect wiring harness to solenoids.
4. Install oil filter with a new gasket and the three 13 mm screws. Tighten the screws to the specified torque.

   Torque: 20 N•m (15 lb ft)

5. Install magnet, main case oil pan with new gasket, sixteen 10 mm screws. Tighten the screws to the specified torque.

   Torque: 11 N•m (96 lb in)

6. Install third crossmember and rear mount nuts. Tighten the nuts and bolts to the specified torque.

   Third crossmember bolt: 76 N•m (56 lb ft)

   Rear mount nut: 50 N•m (37 lb ft)

7. Install the transfer protector. Tighten the bolts to the specified torque (4×4).

   Torque: 37 N•m (27 lb ft)

8. Fill transmission through the overfill screw hole of oil pan, using ATF DEXRON®–III. Refer to Changing Transmission Fluid in this section.
9. Connect the battery ground cable.

Downloaded from www.Manualslib.com manuals search engine

Solenoid (Adapter Case Valve Body)

Removal

1. Raise the vehicle and support it on jack stands.
2. Disconnect battery ground cable.
3. Drain fluid.
4. Remove adapter case oil pan twelve fixing 10 mm screws, adapter case oil pan, and gasket.

NOTE: Oil pan still contains transmission fluid. Place a large drain container under the oil pan and drain the fluid carefully.

5. Disconnect wiring harness from force motor solenoid and converter clutch PWM solenoid. Pull only on connectors, not on wiring harness.
6. Remove 11 mm bolt, bracket and converter clutch PWM solenoid with two O–rings.

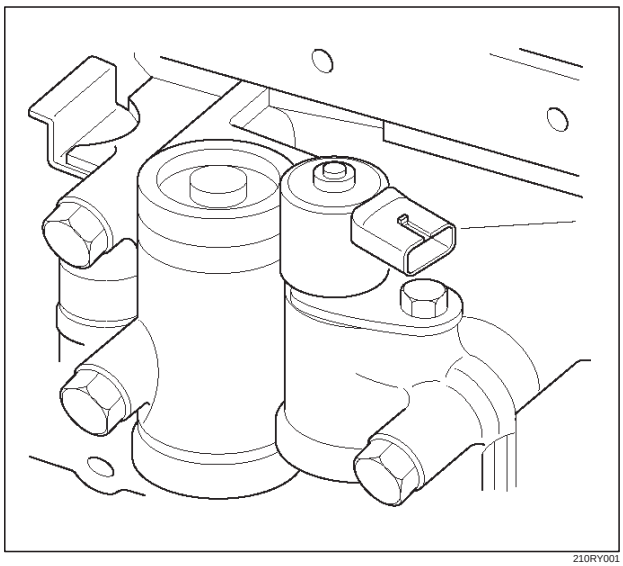

210RY001

7. Remove 11 mm bolt, retainer, and force motor solenoid.

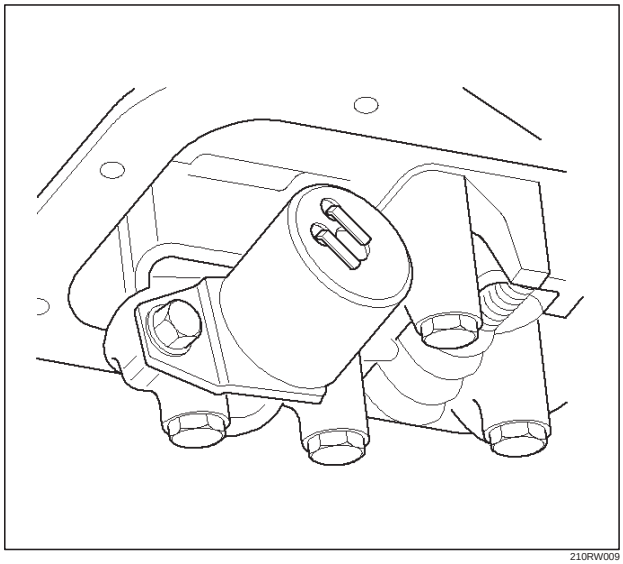

210RW009

Installation

1. Install force motor solenoid, retainer, and 11 mm bolt to adapter case valve body. Tighten the bolt to the specified torque.

Torque: 10 N•m (87 lb in)

2. Install converter clutch PWM solenoid with two O–rings, bracket, and 11 mm bolt to adapter case valve body. Tighten the bolt to the specified torque.

Torque : 10 N•m (87 lb in)

3. Connect wiring harness assembly to solenoids.
4. Install adapter case oil pan, new gasket, and twelve 10 mm screws. Tighten the screws to the specified torque.

Torque : 11 N•m (96 lb in)

5. Fill transmission through overfill screw hole oil pan, using ATF DEXRON®–III. Refer to Changing Transmission Fluid in this section.
6. Connect battery ground cable.

Downloaded from www.Manualslib.com manuals search engine

Valve Body Assembly (Main Case)

Removal

1. Raise the vehicle and support it on jack stands.
2. Disconnect battery ground cable.
3. Remove transfer protector (4×4).
4. Drain fluid.
5. Support transfer case with a jack and remove third crossmember.
6. Remove sixteen 10 mm screws, main case oil pan, magnet and gasket.
7. Remove three 13 mm oil filter fixing screws, then remove oil filter.
8. Remove two 13 mm manual detent fixing screws, then remove roller and spring assembly.
9. Disconnect wiring harness from band control solenoid and shift solenoids. Pull only on connectors, not on wiring harness.
10. Remove four 13 mm servo cover fixing screws, then remove servo cover and gasket.
11. Remove seven 13 mm valve body fixing screws.
12. Remove main case valve body with manual valve link and transfer plate. Note the position of the link (long end into valve, short end into range selector lever).
13. Remove transfer plate gasket from main case.
14. Remove two check balls from main case.

Installation

1. Install two check balls to main case.

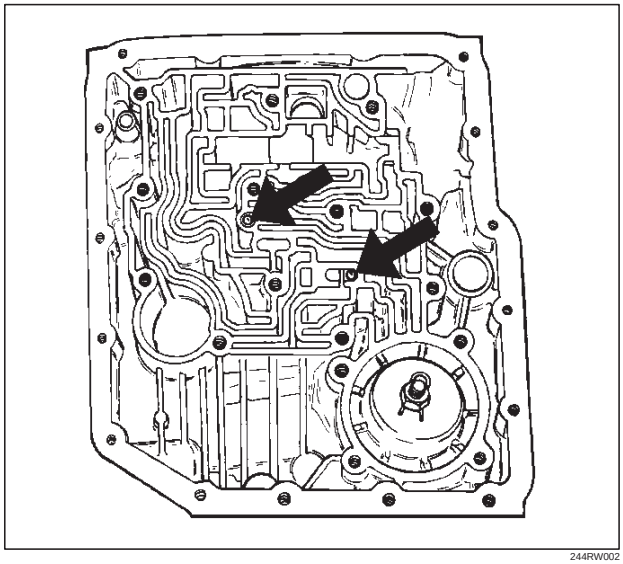

244RW002

2. Inspect electrical 7 way connector and seal of main case. Replace if necessary.
3. Use two J–25025–B guide pin to install main case.
   - Install valve body assembly and manual valve link.

NOTE: Valve must be extended as the short end of manual valve link is connected to the range selector lever. Long end of link goes into valve.

4. Install seven 13 mm screws, and tighten them to the specified torque.

   Torque: 20 N•m (15 lb ft)

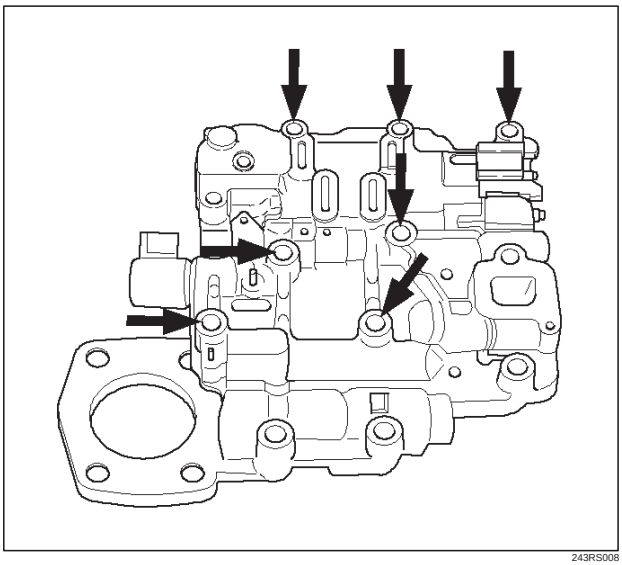

243RS008

5. Remove two guide pins from main case.
6. Install servo cover gasket, cover, and four 13 mm screws. Tighten the screws to the specified torque.

   Torque: 25 N•m (18 lb ft)

7. Connect wiring harness to band control and shift solenoids.
8. Install roller and spring assembly to manual detent.
   - Install two 13 mm screws, and tighten them to the specified torque.

   Torque: 20 N•m (15 lb ft)

9. Install oil filter and three 13 mm screws. Tighten the screws to the specified torque.

   Torque : 20 N•m (15 lb ft)

10. Install oil pan gasket, magnet, oil pan and sixteen 10 mm screws. Tighten the screws to the specified torque.

    Torque: 11 N•m (96 lb in)

11. Install third crossmember and rear mount. Tighten the bolts and nuts to the specified torque.

    Torque

    Third crossmember bolt: 76 N•m (56 lb ft)

    Rear mount nut: 50 N•m (37 lb ft)

12. Install transfer protector. Tighten the bolts to the specified torque (4×4).

    Torque: 37 N•m (27 lb ft)

13. Fill transmission through overfill screw hole of oil pan, using ATF DEXRON®–III. Refer to Changing Transmission Fluid in this section.
14. Connect battery ground cable.

Downloaded from www.Manualslib.com manuals search engine

Valve Body Assembly (Adapter Case)

Removal

1. Raise the vehicle and support it on jack stands.
2. Disconnect battery ground cable.
3. Drain fluid.
4. Remove twelve 10 mm adapter case oil pan fixing screws, adapter case oil pan, and gasket.

NOTE: Oil pan still contains transmission fluid. Place a large drain container under the oil pan.

Drain the fluid carefully.

5. Disconnect wiring harness from force motor solenoid and converter clutch solenoid. Pull only on connectors, not on wiring harness.
6. Remove seven 13 mm screws from adapter case valve body assembly, then remove transfer plate, two gaskets, and adapter case valve body.

Installation

1. Inspect electrical 4 way connector and seal of adapter case. Replace if necessary.
2. Install gasket, transfer plate, and gasket.
3. Install adapter case valve body and seven 13 mm screws. Tighten the screws to the specified torque.

   Torque: 20 N•m (15 lb ft)

4. Connect wiring harness assembly to converter clutch solenoid and force motor.
5. Install oil pan gasket, oil pan, and twelve 10 mm screws. Tighten the screws to the specified torque.

   Torque: 11 N•m (96 lb in)

6. Fill transmission through the overfill screw hole of oil pan, using ATF DEXRON®–III. Refer to Changing Transmission Fluid in this section.
7. Connect battery ground cable.

Powertrain Control Module (PCM)

Removal

1. Disconnect battery ground cable.
2. Disconnect PCM wiring harness connectors from PCM.
3. Remove PCM from bracket.

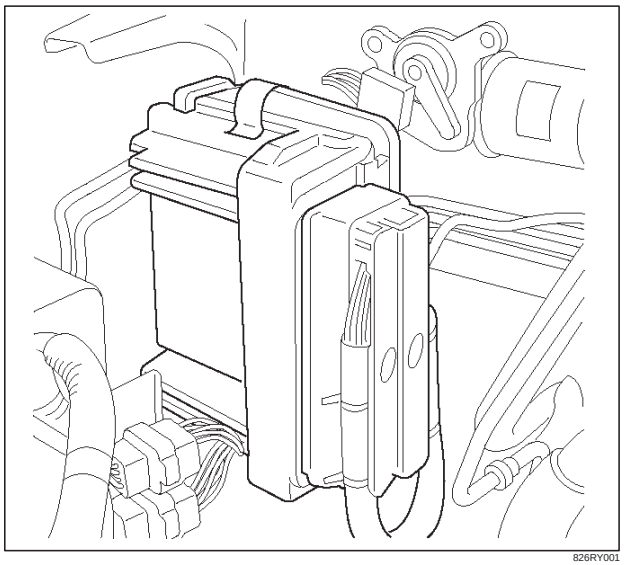

826RY001

Installation

1. Install PCM to bracket.
2. Connect PCM wiring harness connectors to PCM.
3. Connect battery ground cable.

Downloaded from www.Manualslib.com manuals search engine

Speed Sensor (Extension Housing)

Removal

1. Disconnect battery ground cable.
2. Remove front console.
3. Remove selector lever assembly.
4. Disconnect speed sensor harness connector from speed sensor.
5. Remove one 10 mm screw and speed sensor with O–ring.

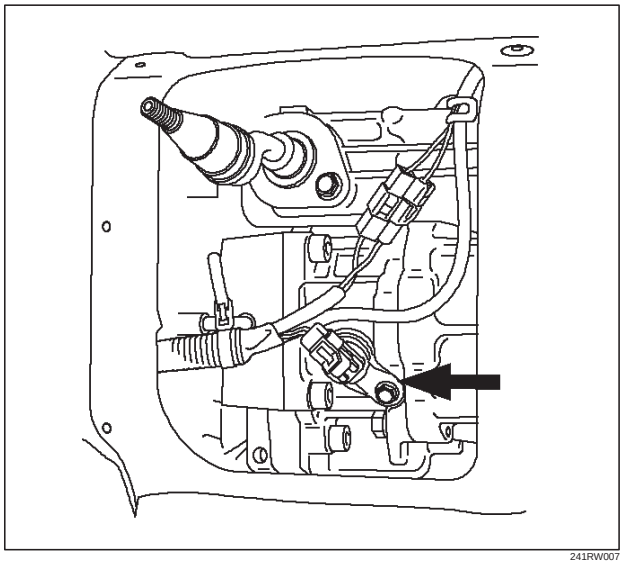

241RW007

Installation

1. Inspect the speed sensor O–ring, and replace it if necessary.
2. Install speed sensor assembly and 10 mm screw.

   Torque: 9 N•m (78 lb in)
3. Connect speed sensor harness connector to speed sensor.
4. Install selector lever assembly.
   - Adjust shift lock cable. Refer to Selector Lever in this section.
5. Install front console.
6. Connect battery ground cable.

Transmission Oil Temperature Sensor (Main Case)

Removal

1. Raise the vehicle and support it on jack stands.
2. Disconnect battery ground cable.
3. Drain fluid.
4. Remove sixteen 10 mm main case oil pan fixing screws, main case oil pan, and gasket.
5. Disconnect wiring harness from shift solenoids, band apply solenoid, and 7 way connector of main case. Pull only on connectors, not on wiring harness.
6. Remove wiring harness assembly with transmission oil temperature sensor.

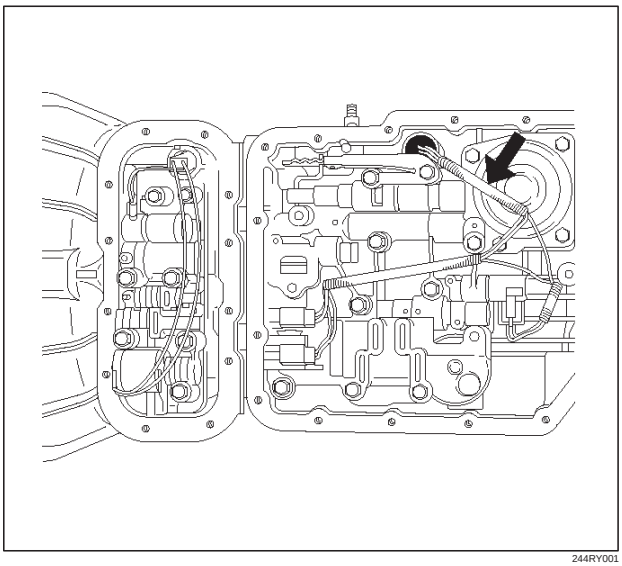

244RY001

Installation

1. Install wiring harness assembly with transmission oil temperature sensor to band apply solenoid, shift solenoids, and 7 way connector of main case.

Downloaded from www.Manualslib.com manuals search engine

2. Install oil pan gasket, oil pan, and sixteen 10 mm fixing screws. Tighten the screws to the specified torque.

Torque: 11 N•m (96 lb in)

3. Fill transmission through the overfill screw hole of oil pan, using ATF DEXRON®–III.
   Refer to Changing Transmission Fluid in this section.
4. Connect battery ground cable.

Front Oil Seal (Converter Housing)

Removal

1. Remove transmission assembly with transfer case from the vehicle. Refer to Transmission (With Transfer Case / Extension Assembly) in this section.
2. Remove torque converter from converter housing.
3. Remove three screws and oil seal ring from converter housing.

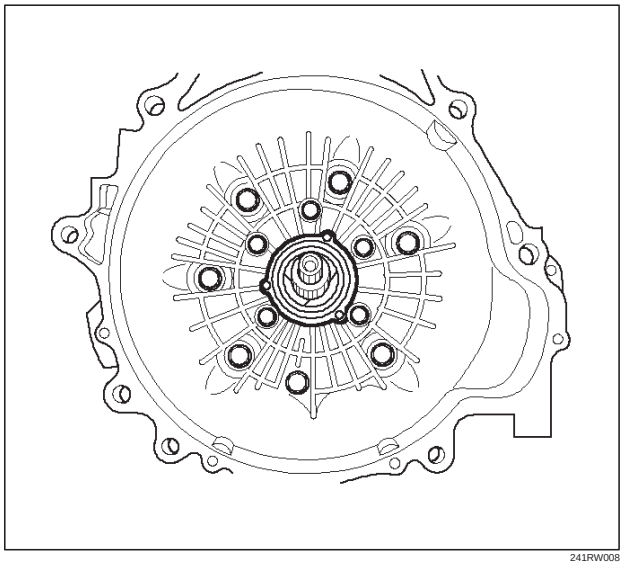

241RW008

Installation

1. Apply clean ATF to the new oil seal ring lip.
   - Install oil seal ring to converter housing. Tighten the screws to the specified torque.

Torque: 3 N•m (26 lb in)

2. Install torque converter to converter housing.
3. Install transmission assembly with transfer case (4×4) / extension assembly (4×2) to the vehicle. Refer to Transmission (With Transfer Case / Extension Assembly) in this section.

Rear Oil Seal (Extension Housing)

Removal

1. Remove transfer case assembly (4×4) or extension assembly (4×2) from the vehicle. Refer to Transfer Case in Drive Line/Axle section.
2. Remove rear oil seal from transmission extension housing.

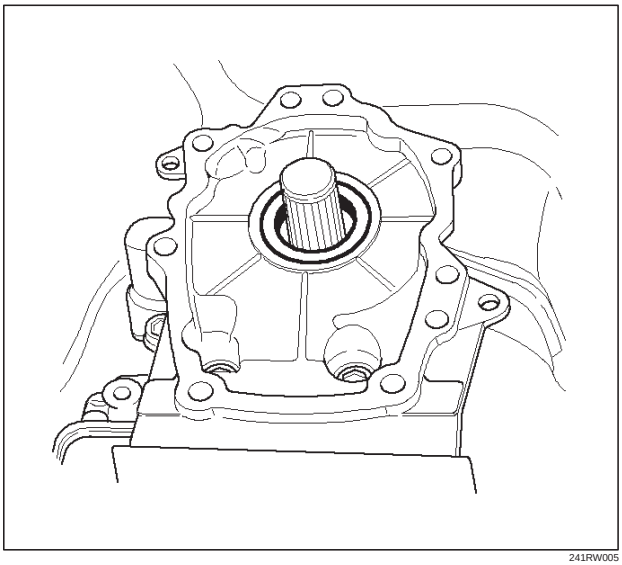

241RW005

Downloaded from www.Manualslib.com manuals search engine

Installation

1. Use J–36797 extension housing oil seal installer, and install the rear oil seal to the transmission extension housing.
2. Install the transfer case assembly (4×4) or extension assembly (4×2) to the vehicle. Refer to Transfer Case in Drive Line/Axle section.

Transmission (4L30–E)

Disassembly

NOTE: During the disassembly and reassembly, perform the following:

- Wash each part thoroughly, and blow air through each oil passage and groove to eliminate blockage.
- Seal rings, roll pins, and gaskets should be replaced.
- When assembling the components, apply DEXRON®–III Automatic Transmission Fluid (ATF) to each seal, rotating part, and sliding part.
- Do not dip part facings, such as clutch or brake drive plates, in cleaner when washing it.
  Also, always coat parts with new ATF two or three times after cleaning with solvent.

1. Remove torque converter (1).
   - Drain fluid from torque converter.
   - Attach J–8763–02 holding fixture to the transmission and set it on J–3289–20 holding fixture base.

NOTE: Do not overtighten the tool, as case damage may result.

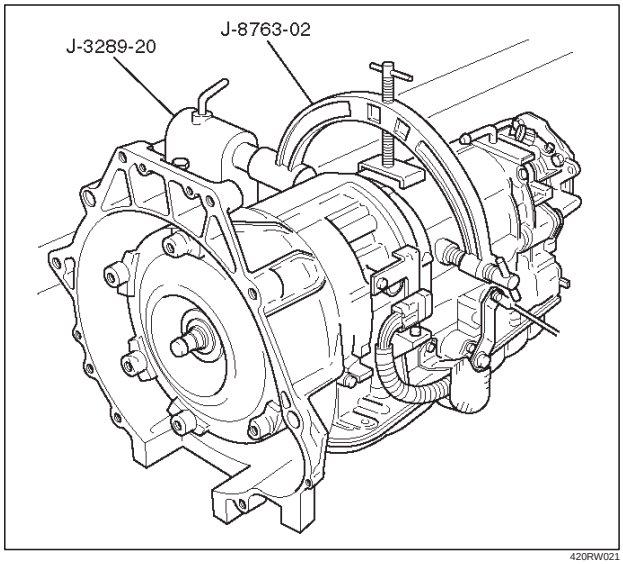

420RW021

2. Remove O–ring (2) from turbine shaft.
3. Remove two 10mm mode switch screws, selector lever nut, cover, and mode switch (3).
4. Remove twelve 10mm adapter case oil pan (4) fixing screws, adapter oil pan, and gasket.
5. Disconnect electrical wiring connections (5) from solenoids and 4 way connector of adapter case. Pull on connectors only, not on wiring harness.
6. Remove seven 13mm adapter case valve body (6) fixing screws, adapter case valve body assembly, transfer plate, and two gaskets.
   - Remove wiring harness and 4 way connector.
7. Remove sixteen 10mm main case oil pan (7) fixing screws, main oil pan, magnet, and gasket.
8. Remove three 13mm oil filter (8) fixing screws and oil filter.
9. Remove two 13mm manual detent (9) fixing screws, roller and spring, and manual detent.
10. Disconnect wiring harness assembly (10) from band apply solenoid, shift solenoids, and main case 7 way connector.
    Pull on connectors only, not on wiring harness.
11. Remove four 13mm servo cover (11) fixing screws, servo cover, and gasket.
12. Remove seven 13mm valve body screws and ground wire from main case.
    - Remove wiring harness assembly (5) from the adapter case side.
    - Remove main valve body assembly (12) with manual valve link and transfer plate. Note the position of the link (long end into valve, short end into range selector lever).
    - Remove 7 way connector.
    - Remove gasket transfer plate from main case.

Downloaded from www.Manualslib.com manuals search engine

13. Remove two check balls (13) from main case.

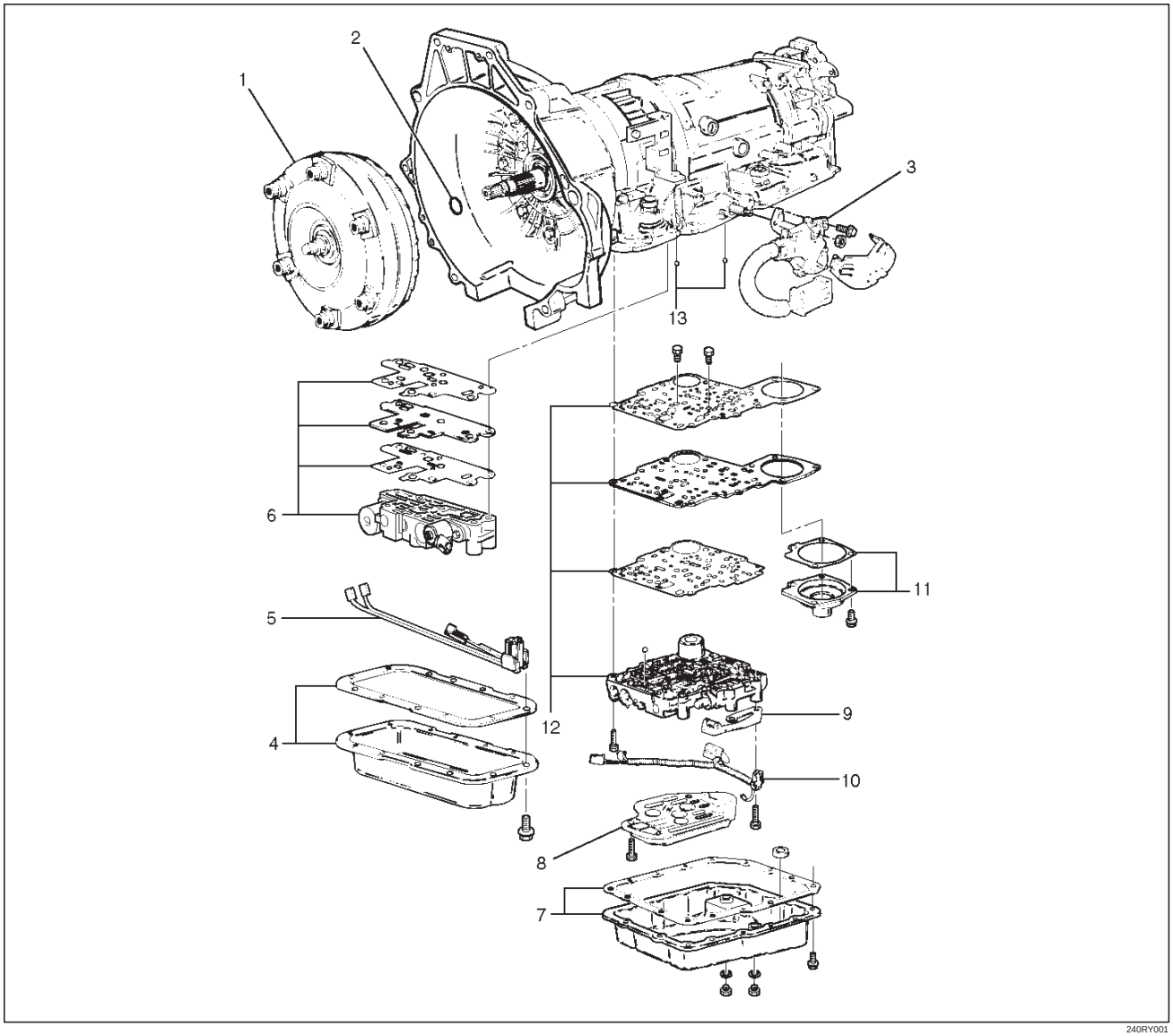

240RY001

14. Turn transmission to vertical position to drain fluid. Return back to horizontal position when drained.
    - Install J–23075 servo piston spring compressor with offset to the rear of case.
    - Compress servo piston assembly.
    - Remove servo piston retaining ring (14).
    - Slowly release servo piston assembly (15).
    - Remove tool.

Downloaded from www.Manualslib.com manuals search engine

15. Remove servo piston assembly (15), return spring (16), and servo apply rod (17).

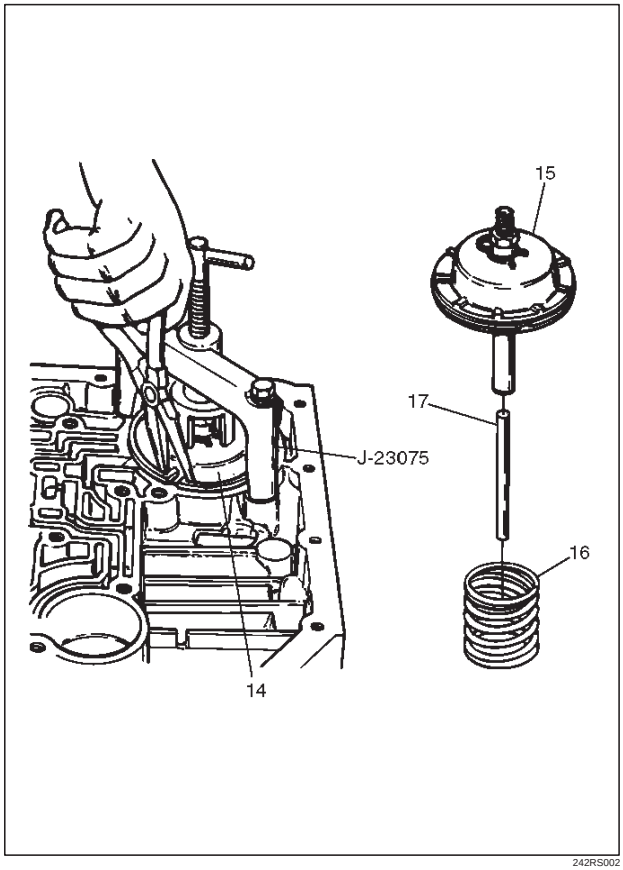

16. Rotate transmission to horizontal position, pan side down.
    - Remove one 10mm screw, and speed sensor (18) with “O” ring.
17. Remove seven 8mm extension housing hexagon socket head screws, extension housing assembly (19), and gasket.
18. Remove retaining ring (20).

NOTE: Use extra long, needle- nose pliers.

19. Remove speed wheel (21).
20. Remove wheel parking lock (with seal ring) (22).

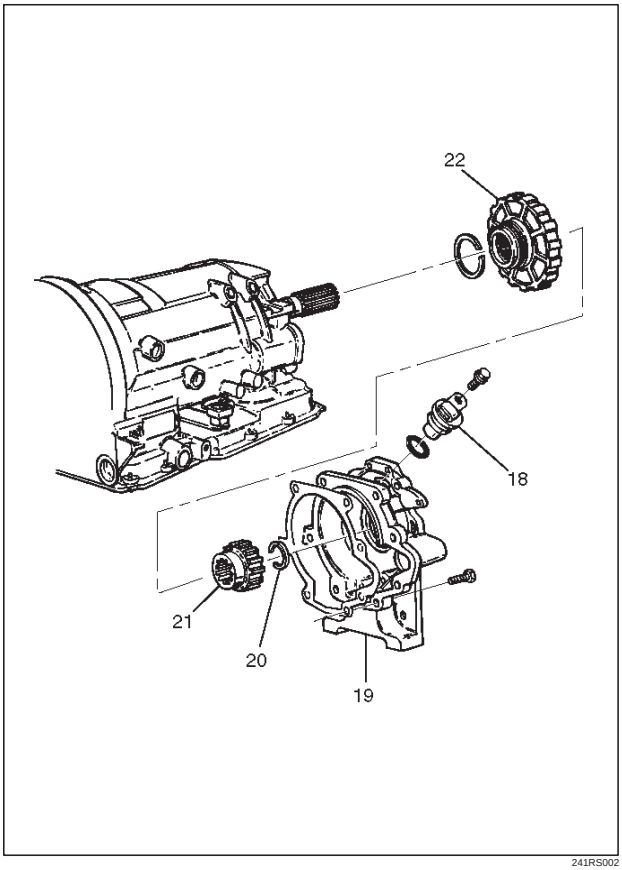

21. Rotate transmission to vertical position, converter housing up.
    - Loosen the converter housing and oil pump assembly fixing screws, but do not remove the five 13 mm inner screws if oil pump disassembly is required.
    - Remove seven outer screws.
    - Remove converter housing and oil pump assembly (23).
22. Remove gasket (24).

Downloaded from www.Manualslib.com manuals search engine

23. Remove selective thrust washer (25).

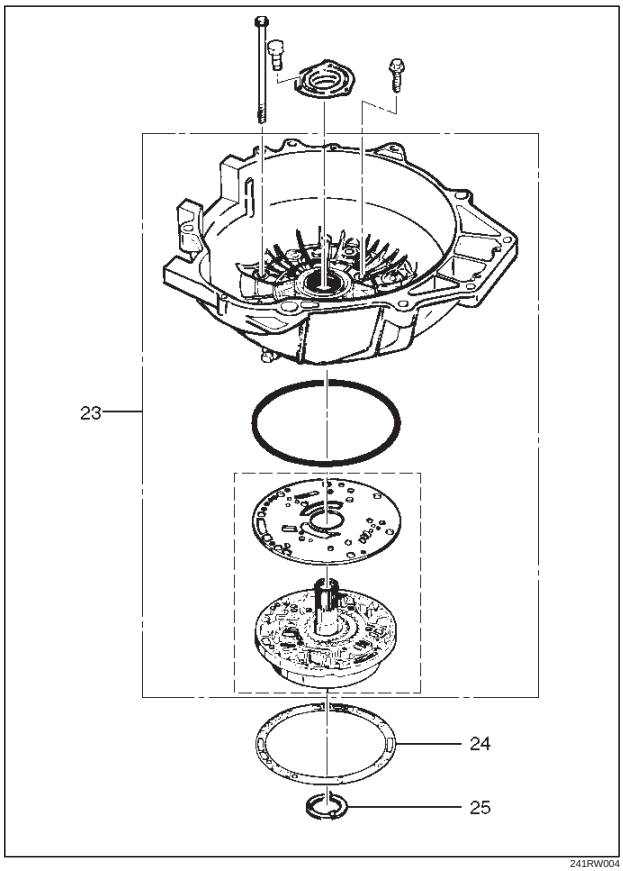

24. Remove fourth clutch retainer (26).
25. Grasp turbine shaft and lift out the overrun clutch housing assembly (27) and fourth clutch plates (28).
26. Remove thrust bearing assembly (29).
27. Remove overdrive internal gear (30).

28. Remove thrust washer (31).

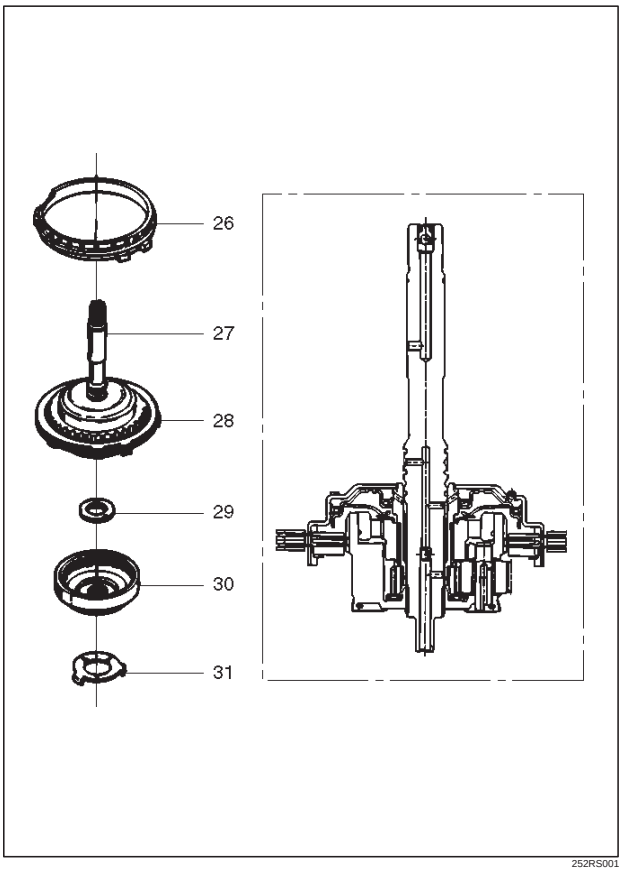

29. Remove adapter case and center support assembly (with fourth clutch piston) (32).
30. Remove seal ring (33).
31. Remove selective thrust washer (34) and two O–ring seals (35) from main case.
32. Use J–23327 and J–23327–90 compressor to compress the fourth clutch spring retainer and springs (37).
    - Release snap ring (36) from groove.
    - Remove clutch compressor and snap ring (36).
33. Remove retainer and spring assembly (37).
34. Insert two converter housing/main case screws to hold adapter case while pulling out fourth clutch piston (38).
    - Remove fourth clutch piston assembly (38) from the adapter case.
    - Remove converter housing/main case screws.
35. Grasp intermediate shaft, twist and pull out the second and third clutch drum assemblies with reverse clutch plates while holding onto output shaft (39).

Downloaded from www.Manualslib.com manuals search engine

36. Separate second (40) and third clutch (41) assemblies.
37. Remove thrust washer (42).
38. Remove reverse clutch plates (43 and 44) and reverse clutch pressure plate (45).
39. Remove bearing (46) and washer (47).
40. Remove planetary carrier assembly (48).
41. Remove thrust bearing (49).
42. Remove reaction sun gear (50)
43. Remove needle bearing (51).
44. Remove brake drum (52).
45. Remove brake band (53).
46. Remove thrust bearing (54).

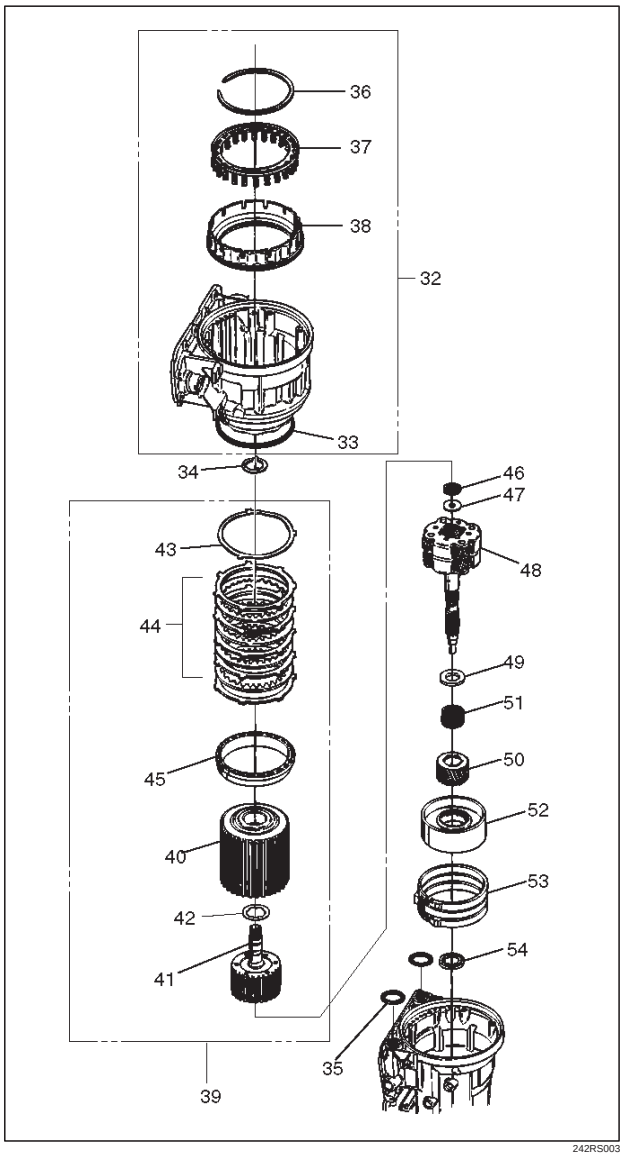

242RS003

47. Rotate case to horizontal position, valve body side facing up.
    - Remove spring pin (55), using cutting pliers, then remove parking lock and selector lever assembly (56).

NOTE: Insert wire in the center of the spring pin to prevent it from collapsing during removal. Be aware of pin height. Protect machined face of main case.

48. Remove parking lock and range selector lever 17 mm nut (57).
49. Remove parking lock and range selector lever (56), and actuator assembly.
50. Remove selector shaft (58).

NOTE: Inspect the shaft for burrs before removing to prevent damaging seal. If necessary, remove burrs by lightly sanding with an oilstone.

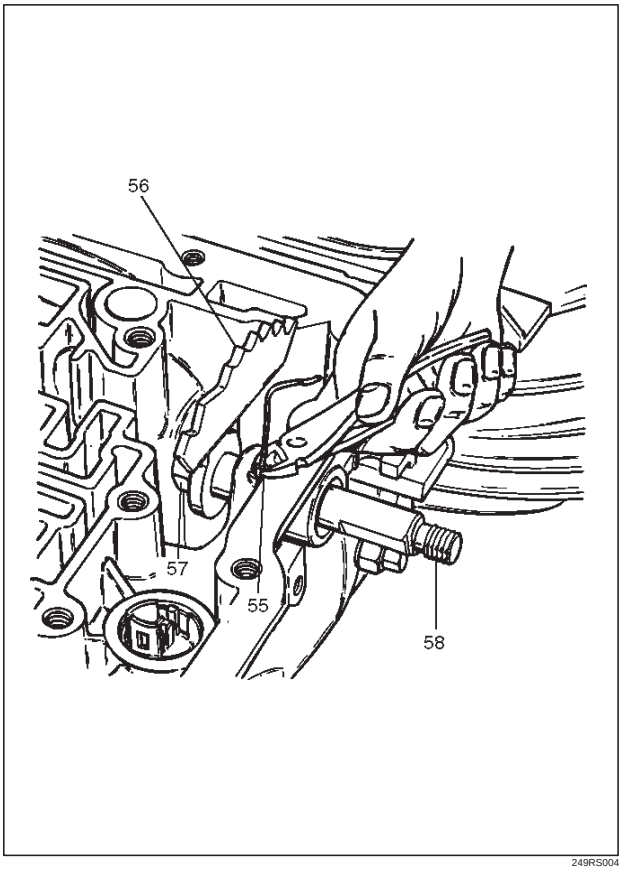

249RS004

Reassembly

1. Inspect selector shaft seal, and replace it if necessary.

NOTE: Use a seal installer when replacing the seal.

- Install selector shaft.

NOTE: Spring pin groove must be positioned inside the case.

2. Install spring pin. Be sure the selector shaft can move freely. Do not push the pin flush with the case surface. Leave enough height for removal.
3. Install actuator assembly (1).
4. Install parking lock and range selector lever (2) and new 17 mm nut. Tighten the nut to the specified torque.

Torque: 22 N•m (16 lb ft)

Downloaded from www.Manualslib.com manuals search engine

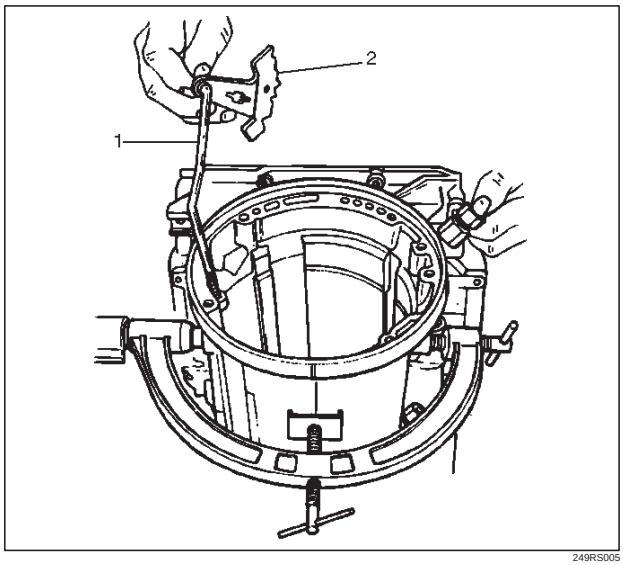

249RS005

5. Rotate main case to vertical position, extension end facing down.
   - Install brake band assembly (3).

NOTE: Be sure to align servo pin area with the servo hole.

6. Install thrust bearing (4).

NOTE: The case bushing acts as a guide for the thrust bearing.

7. Install brake drum (5).
8. Install reaction sun gear (6).
9. Install needle bearing (7).
10. Inspect planetary carrier assembly (8) for wear and damage. If necessary replace it.
    - Measure pinion end play clearance with a feeler gauge.

    Clearance: 0.13mm–0.89mm (0.005 in–0.035 in)

    If clearance is outside specified value, replace the planetary carrier assembly.

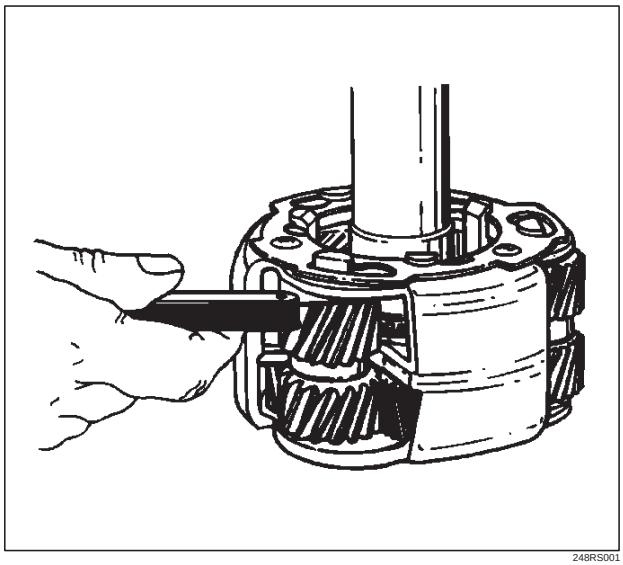

248RS001

11. Install the thrust bearing (9) on the output shaft.

NOTE: Use petroleum jelly to hold the thrust bearing in place.

12. Align planetary pinions. Each pinion is marked with double points to indicate the master tooth space and exactly opposite with a single point to indicate the master tooth. The markings on the planetary carrier consist of double lines which are to be lined up with the double points on two opposite pinions; the single lines are to be lined up with the single points on the other two pinions.
    - After all four pinions are lined up, slide on the third clutch assembly. Rotate third clutch and check mark alignment. Considering that the ring gear tooth between the double points of one planetary pinion is tooth number 1, count the teeth to check that the single points on the two adjacent pinions are between teeth 23 and 24 of the ring gear, and that the ring gear tooth between the double points of the opposite pinion is tooth number 46. If the ring gear and pinions are not lined up, remove, and realign them.
13. Install planetary carrier (8) with third clutch (12).

NOTE: Do not force. When properly aligned, the parts will fit together easily.

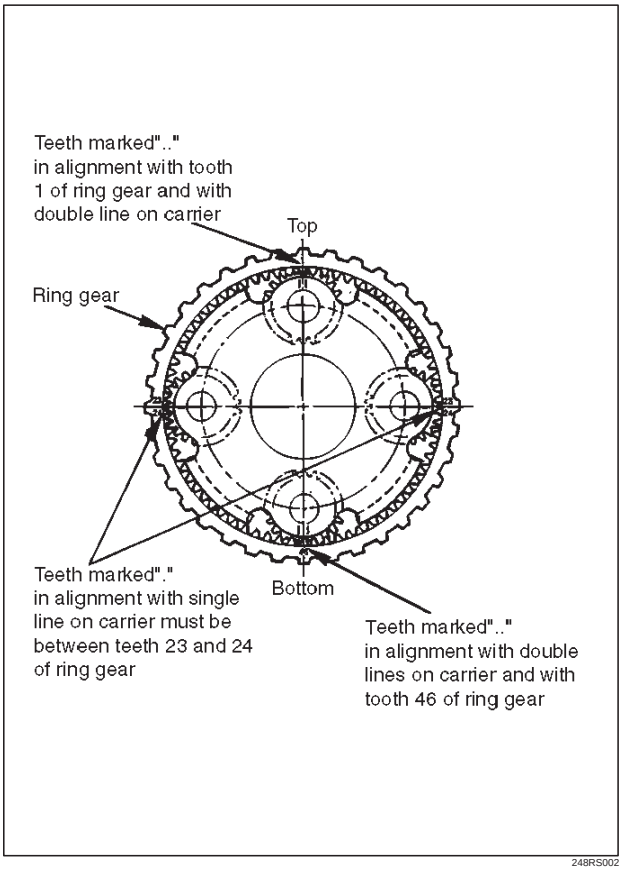

248RS002

14. Remove the third clutch (12).
15. Install bearing (11) and washer (10).

Downloaded from www.Manualslib.com manuals search engine

NOTE: Use petroleum jelly to hold the washer and bearing in place.

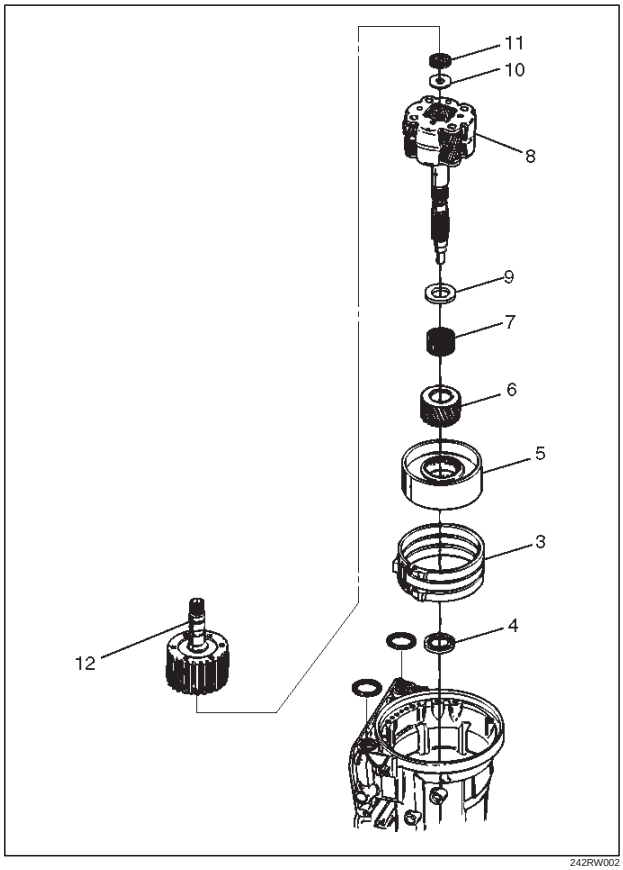

242RW002

16. Carefully align the second clutch plate inner tangs.
    - Install thrust washer, tangs pointing downward, and locating tang positioned in slot on second clutch hub.

NOTE: Use petroleum jelly to hold thrust washer in place.

17. Install third clutch and intermediate shaft assembly (13) into the second clutch drum (14).

18. Install second and third clutch assemblies into the main case. Twist output shaft and clutch assemblies to ensure proper fit.

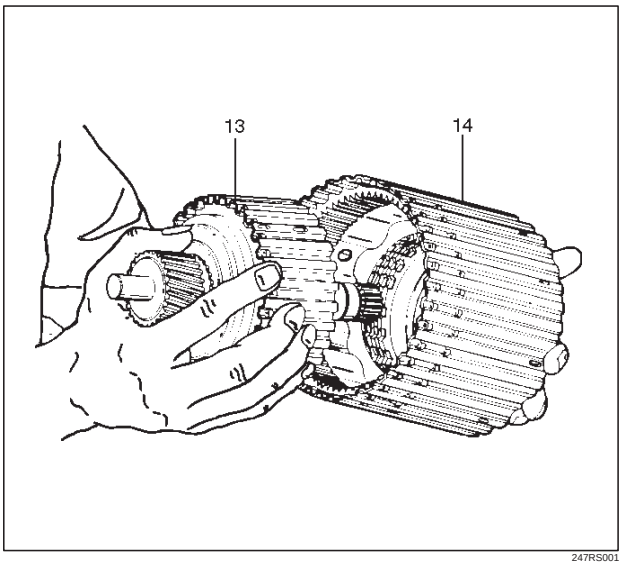

247RS001

19. Install pressure plate (15) with lip side up, tang facing valve body face.
20. Install reverse clutch plates. Start with a steel plate (17) and alternate with a lined plate (16).
21. Install waved clutch plate (18) with center tang facing valve body side.

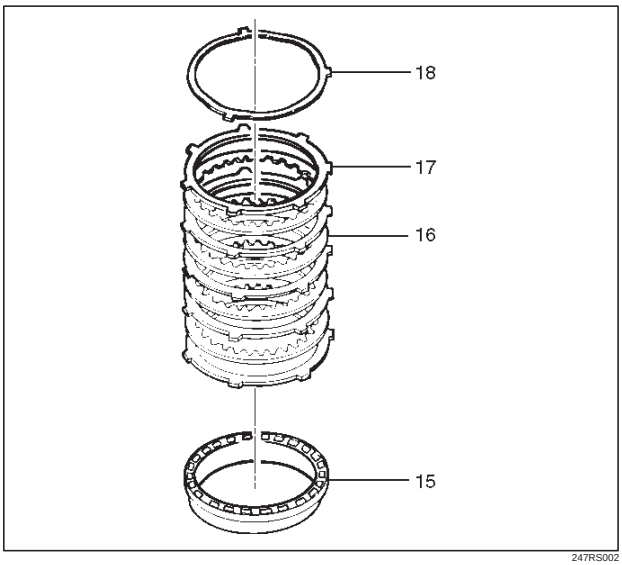

247RS002

Downloaded from www.Manualslib.com manuals search engine

22. Second clutch end play measurement
    1. Install the J–23085–A Selective washer gauging tool (with spacer ring) on the case flange and against the intermediate shaft.
    2. Position the inner shaft of the gauging tool against the thrust surface of the second clutch hub.
    3. Tighten thumb screw. Remove the tool.
    4. Fit the spacer ring on the inner shaft of the tool.
    5. Measure the gap, and select the appropriate washer as shown in the chart.

Selective Thrust Washer	
Gap: mm(in)	**Color**
1.53 – 1.63 (0.060 – 0.064)	Yellow
1.72 – 1.82 (0.068 – 0.072)	Red
1.91 – 2.01 (0.075 – 0.079)	Black
2.10 – 2.20 (0.083 – 0.087)	Natural
2.29 – 2.39 (0.090 – 0.094)	Green
2.48 – 2.58 (0.098 – 0.102)	Blue
FOLLOWING THE PROCEDURE SHOULD RESULT IN FINAL END–PLAY FROM 0.36 mm TO 0.79 mm (0.014 in TO 0.031 in)	

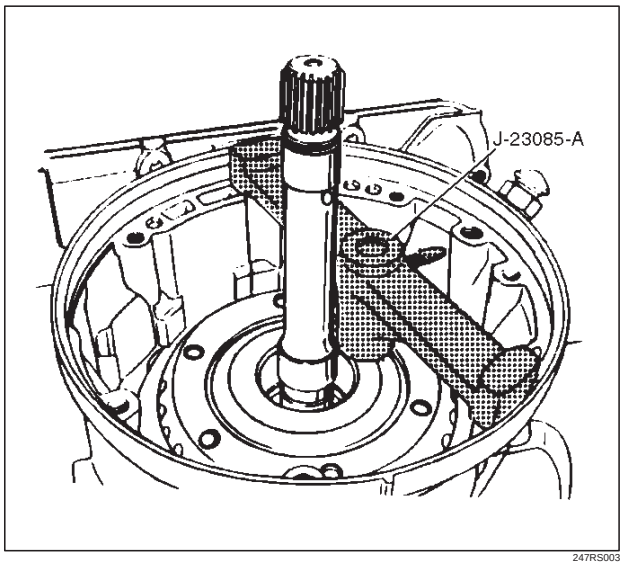

247RS003

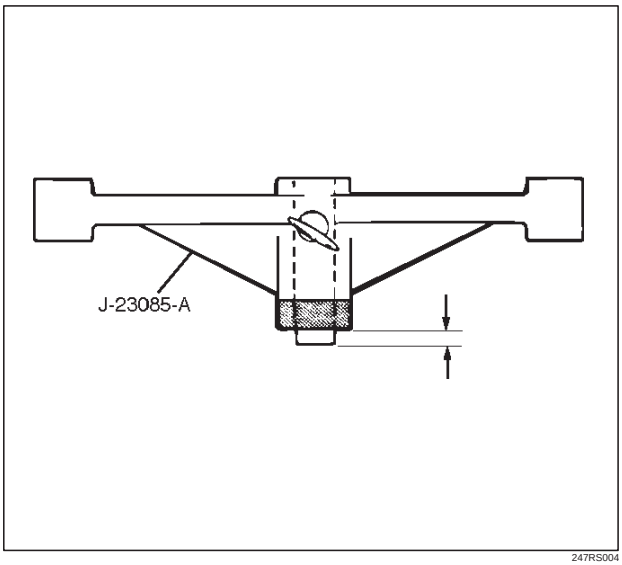

247RS004

23. Inspect fourth clutch piston seals and replace if necessary.
    - Lubricate J–38554 fourth clutch piston fitter and install it on fourth clutch piston (19).
    - Install fourth clutch piston (19) in adapter case (20).
    - Remove fitter.

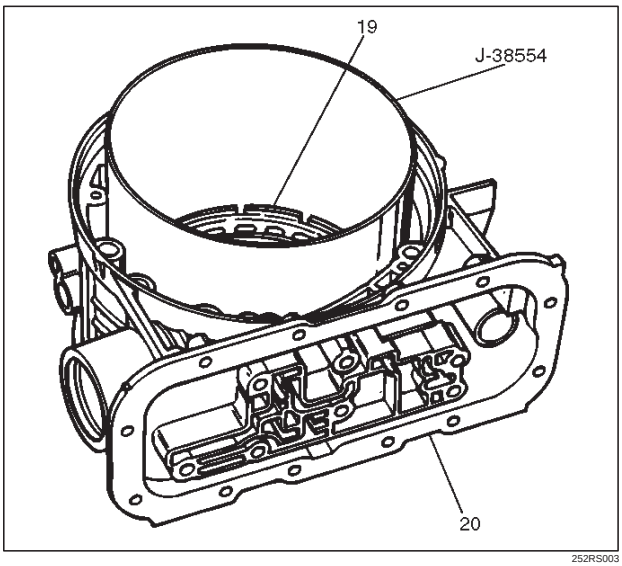

252RS003

Downloaded from www.Manualslib.com manuals search engine

24. Install retainer and spring assembly (22) into fourth clutch piston (21).
25. Install snap ring (23) in adapter case.
    - Install J–23327 and J–23327–90 fourth clutch spring compressor.
    - Seat snap ring in groove.
    - Remove compressor.

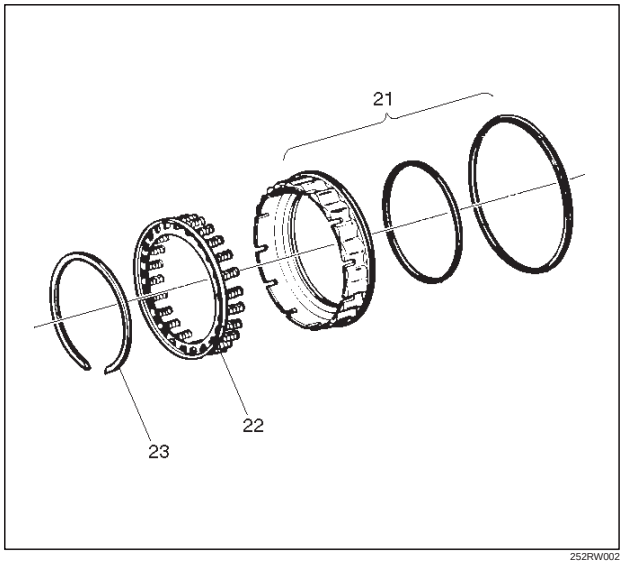

252RW002

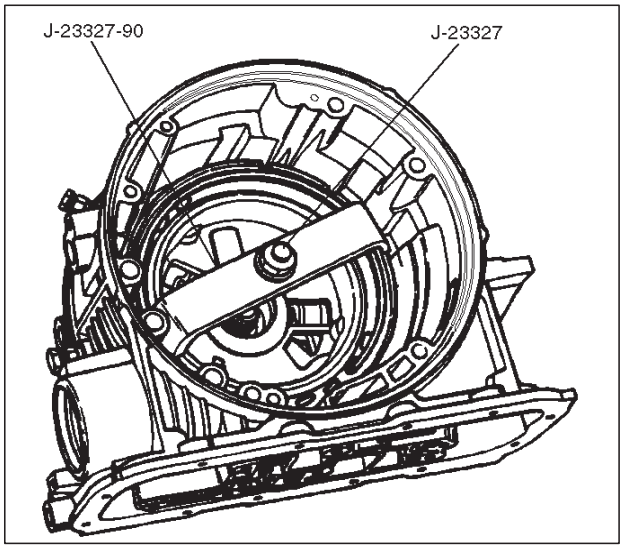

252RS004

26. Install selective washer using petroleum jelly.
27. Install two O–ring seals (24) in main case and adapter case/main case seal ring (25).
28. Install J–38588 guide pins.
    - Install adapter case and center support assembly to main case.

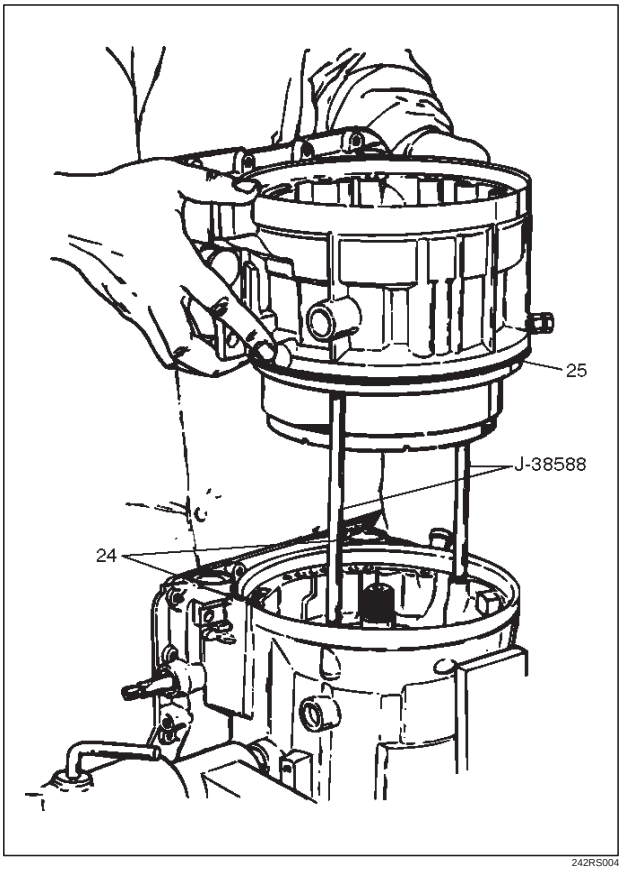

242RS004

29. Install thrust washer (26) into adapter case, with tangs pointing downwards.
30. Preassemble overdrive internal gear (27) and thrust bearing assembly (28) onto the turbine shaft and overrun clutch assembly.

NOTE: Install bearing assembly, black side up. Use petroleum jelly to keep assembly in place.

31. Install overdrive carrier (30) and internal gear assembly into adapter case.
32. Install fourth clutch plates (29) in the following order: Steel, Lined, Steel, Steel, Lined, Steel. Steel plates go in with short tang facing towards valve body surface.

Downloaded from www.Manualslib.com manuals search engine

33. Install fourth clutch retainer (31) with the notch facing up and positioned towards valve body surface.

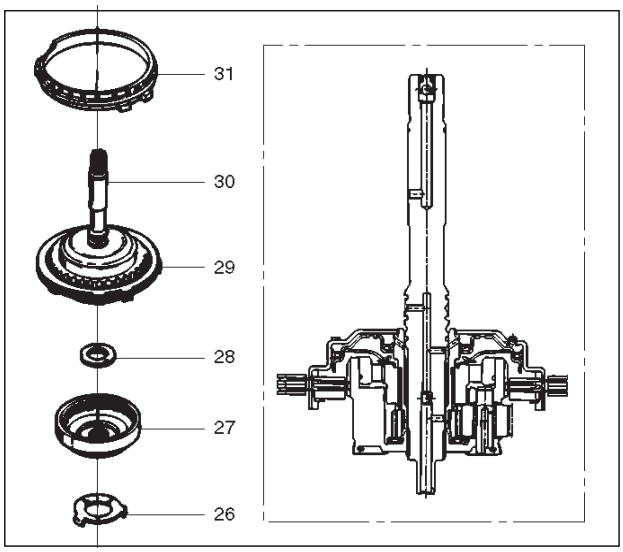

252RW004

34. Overdrive clutch end play measurement
    1. Install the J–23085–A selective washer gauging tool on the adapter case flange and against the input shaft.
    2. Position the inner shaft of the tool against the thrust surface of the overrun clutch housing.
    3. Tighten thumb screw. Remove the tool.
    4. Measure gap. Select appropriate size washer as shown in the chart.
    5. Set selective thrust washer aside.

Selective Thrust Washer	
Gap: mm(in)	**Color**
1.53 – 1.63 (0.060 – 0.064)	Yellow
1.72 – 1.82 (0.068 – 0.072)	Red
1.91 – 2.01 (0.075 – 0.079)	Black
2.10 – 2.20 (0.083 – 0.087)	Natural
2.29 – 2.39 (0.090 – 0.094)	Green
2.48 – 2.58 (0.098 – 0.102)	Blue
FOLLOWING THE PROCEDURE SHOULD RESULT IN FINAL END–PLAY FROM 0.1 mm TO 0.8 mm (0.004 in TO 0.03 in)	

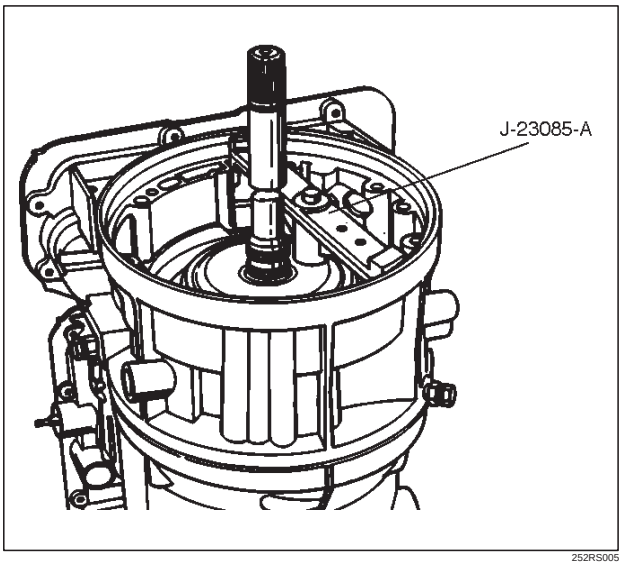

252RS005

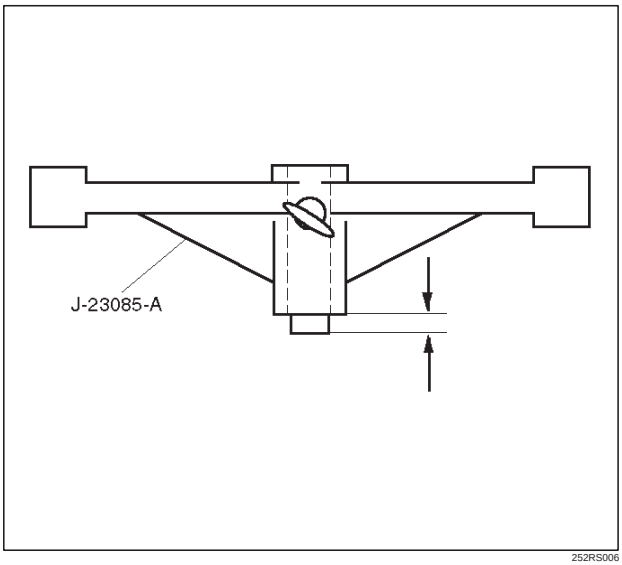

252RS006

35. Install selective washer (32).

NOTE: Use petroleum jelly to hold selective washer in place.

36. Install gasket (33).
37. Install converter housing and oil pump assembly (34) to adapter case.
    - Fit and tighten seven outer 13 mm screws.

    Torque: 39 N•m (29 lb ft)

Downloaded from www.Manualslib.com manuals search engine

- Ensure free rotation of pump using J–23082–01 oil pump rotation tool.

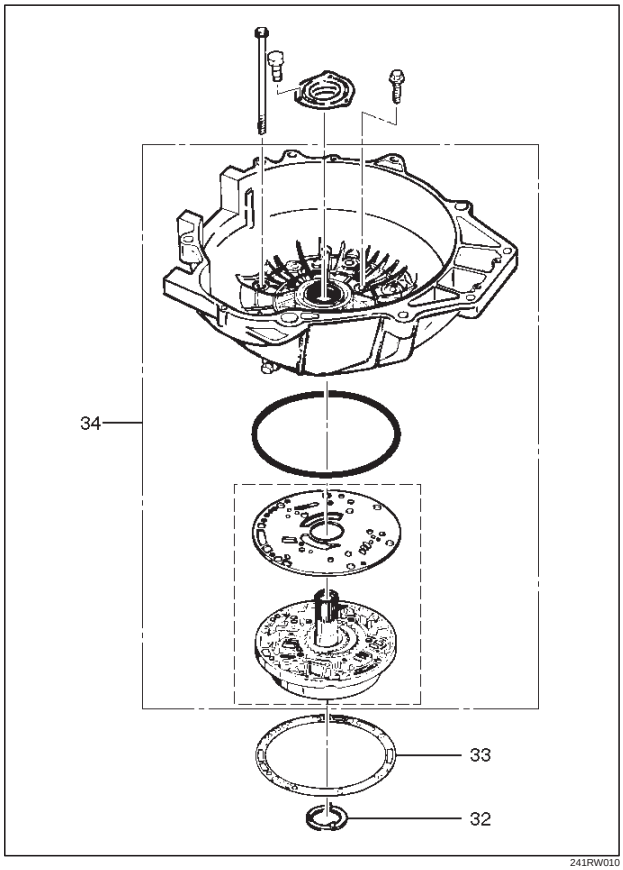

241RW010

38. Overdrive clutch end play measurement
    1. Fit J–25022 and J–24773–1 turbine shaft puller on turbine shaft.
    2. Position axial play checking tool on converter housing mating face.
    3. Pull turbine shaft upwards with puller until first resistance is met. (due to weight of overdrive assembly).
    4. Maintain shaft in this position and set indicator to zero.
    5. Pull turbine shaft further upwards with puller. Read end play shown on indicator.

    End play: 0.1mm – 0.8mm (0.004 in – 0.031in)

    6. Remove axial play checking tool and puller.

NOTE: If end play is not correct, repeat selective washer selection.

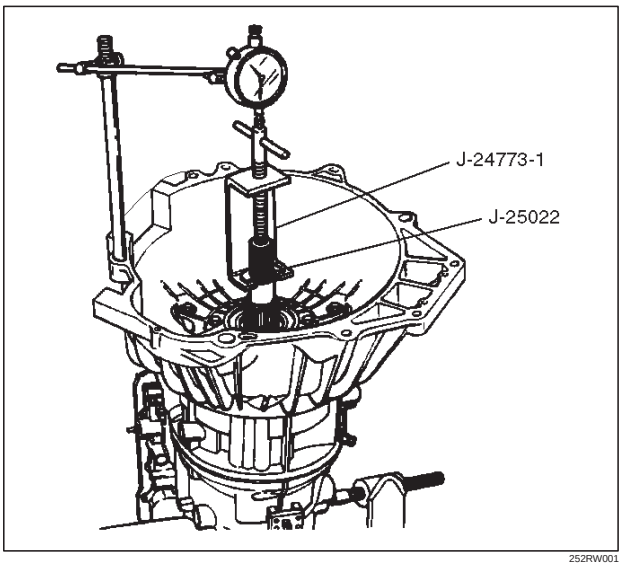

252RW001

39. Inspect extension housing oil seal and replace if necessary, using J–36797 extension housing oil seal installer.
    - Rotate transmission to horizontal position, with valve body side down.
    - Inspect parking wheel seal ring. Replace if necessary.
    - Install wheel parking lock assembly (35).
40. Install speed wheel (36) and snap ring (37).

NOTE: Use extra long, needle-nose pliers.

41. Install gasket onto extension assembly with a thin coating of oil.
    - Install extension housing assembly (38), and align parking pawl shaft.
    - Install actuator assembly into extension assembly.
    - Install seven 8 mm hexagon socket head screws.

    Torque: 32 N•m (24 lb ft)

42. Inspect speed sensor O–ring. Replace if necessary.
    - Install speed sensor assembly (39) and 10 mm screw.

    Torque: 9 N•m (78 lb in)

Downloaded from www.Manualslib.com manuals search engine

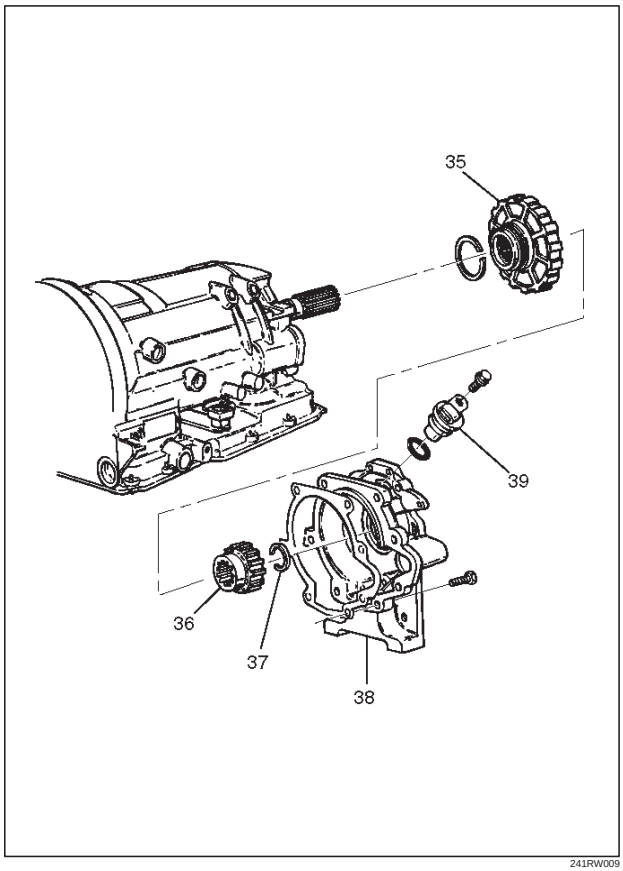

241RW009

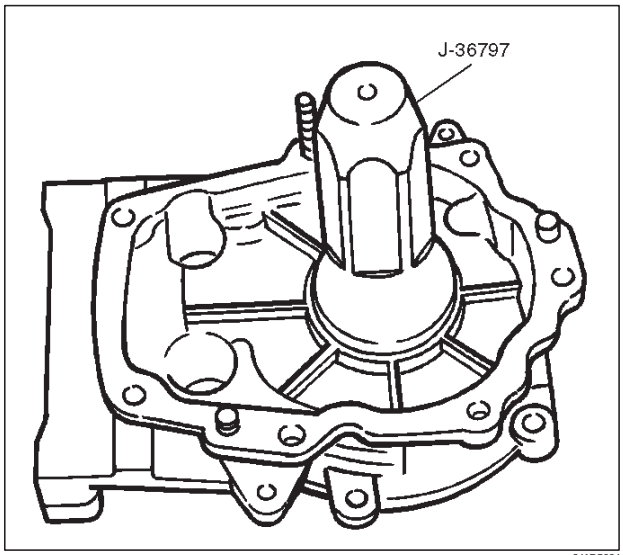

241RS004

43. Main case end play measurement
    1. Attach axial play checking tool on the extension housing and set indicator to zero on output shaft.
    2. Manually push output shaft upwards.

    End play: 0.36mm – 0.80mm (0.014 in – 0.031in)

    3. Remove axial play checking tool.
    4. If end play is not correct, repeat selective washer selection.

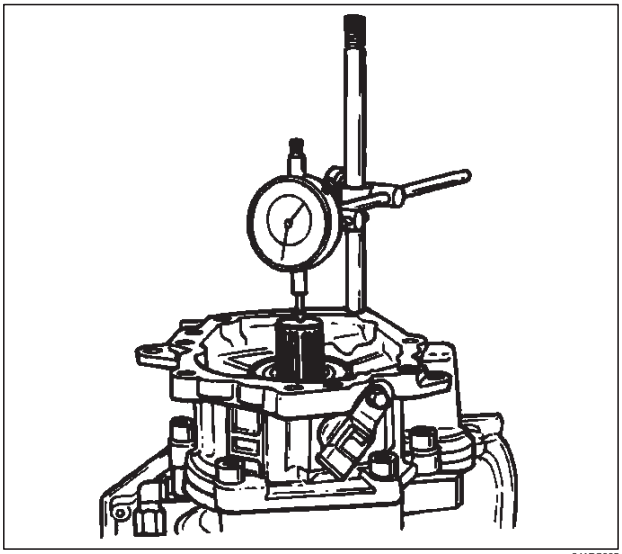

241RS005

44. Inspect servo piston seal ring. Replace if necessary.
    - Ensure brake band is correctly positioned. Rotate output shaft if necessary.
    - Install J–38428 servo piston fitter in servo bore.
    - Install apply rod (40), round end toward band, return spring (41) and piston assembly (42).
45. Install the J–23075 servo spring compressor with offset to rear of case.
    - Compress servo piston seal ring, using fitter while tightening the tool screw.
    - Install servo piston retaining ring (43).
    - Remove tool.
    - Adjust the brake band by tightening the servo adjusting screw to 4.5 N·m torque. Be certain the lock nut is loose, then back–off the screw five turns exactly. Hold piston sleeve with wrench and tighten lock nut to 18.5 N·m torque. Be certain the adjusting screw does not turn.

Downloaded from www.Manualslib.com manuals search engine

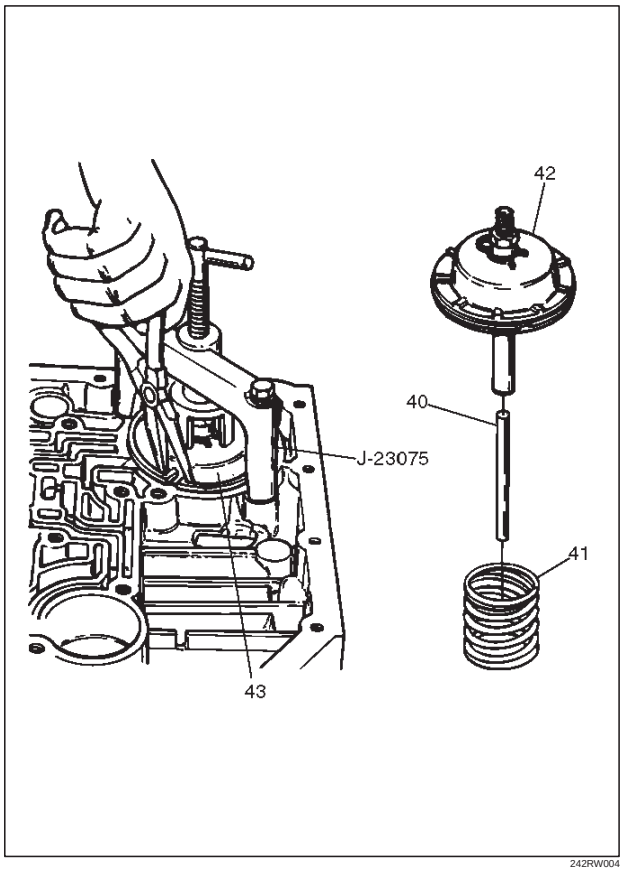

242RW004

46. Install two check balls (44).

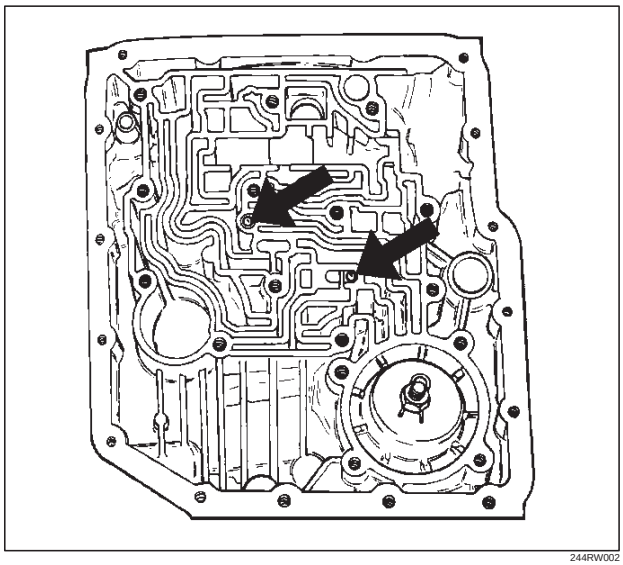

244RW002

47. Inspect main case electrical connector and seal, replace if necessary.
    - Install electrical 7 way connector/main case and wiring harness.
48. Install two J–25025–B guide pins into main case.
    - Install main case valve body complete assembly (45) and manual valve link.

NOTE: Valve must be extended as the short end of manual valve link is connected to the range selector lever. Long end of link goes into valve.

- Install seven 13 mm screws.

Torque: 20 N•m (15 lb ft)

- Remove two guide pins.

49. Install servo cover gasket, cover (46) and four 13 mm screws.

Torque: 25 N•m (18 lb ft)

50. Connect wiring harness (47) to band control, shift solenoids, and main case 7 way connector.
51. Install manual detent roller and spring assembly (48) with clip.
    - Install two 13 mm screws.

Torque: 20 N•m (15 lb ft)

52. Install oil filter (49), and three 13 mm screws.

Torque: 20 N•m (15 lb ft)

53. Install oil pan gasket, magnet, main oil pan (50), and sixteen 10 mm screws.

Torque: 11 N•m (96 lb in)

54. Inspect adapter case electrical connector and seal. Replace if necessary.
    - Install electrical five pin connector and harness assembly (52) in bottom of adapter case.
55. Install gasket, transfer plate, and gasket.
    - Install adapter case valve body (51) and seven 13 mm screws.

Torque: 20 N•m (15 lb ft)

56. Connect wiring harness harness assembly (52) to converter clutch PWM solenoid, force motor, and 4 way connector.
57. Install oil pan gasket, adapter case oil pan (53), and twelve 10 mm screws.

Torque: 11 N•m (96 lb in)

- Rotate transmission, with bottom pan facing down.

58. Install mode switch (54), two 10 mm screws, selector lever nut, and cover.

10 mm screw

Torque: 13 N•m (113 lb in)

Nut

Torque: 23 N•m (17 lb ft)

- Adjust using setting tool, refer to Mode Switch in this section.

59. Install O–ring (55) on turbine shaft.
60. Install torque converter (56).

    The converter assembly must be replaced under any of the following conditions:

    a. Evidence of damage to the pump assembly.
    b. Metal particles are found after flushing the cooler lines.
    c. External leaks in hub weld area.
    d. Converter pilot broken, damaged, or poor fit into crankshaft.

Downloaded from www.Manualslib.com manuals search engine

e. Converter hub scored or damaged.

f. Internal failure in stator.

g. Contamination from engine coolant.

h. Excess end play.

- Rotate transmission, bell housing up. Spin converter to insure proper fit.

61. Fill transmission through the overfill screw hole of oil pan, using ATF DEXRON®–III. Refer to Changing Transmission Fluid in this section.

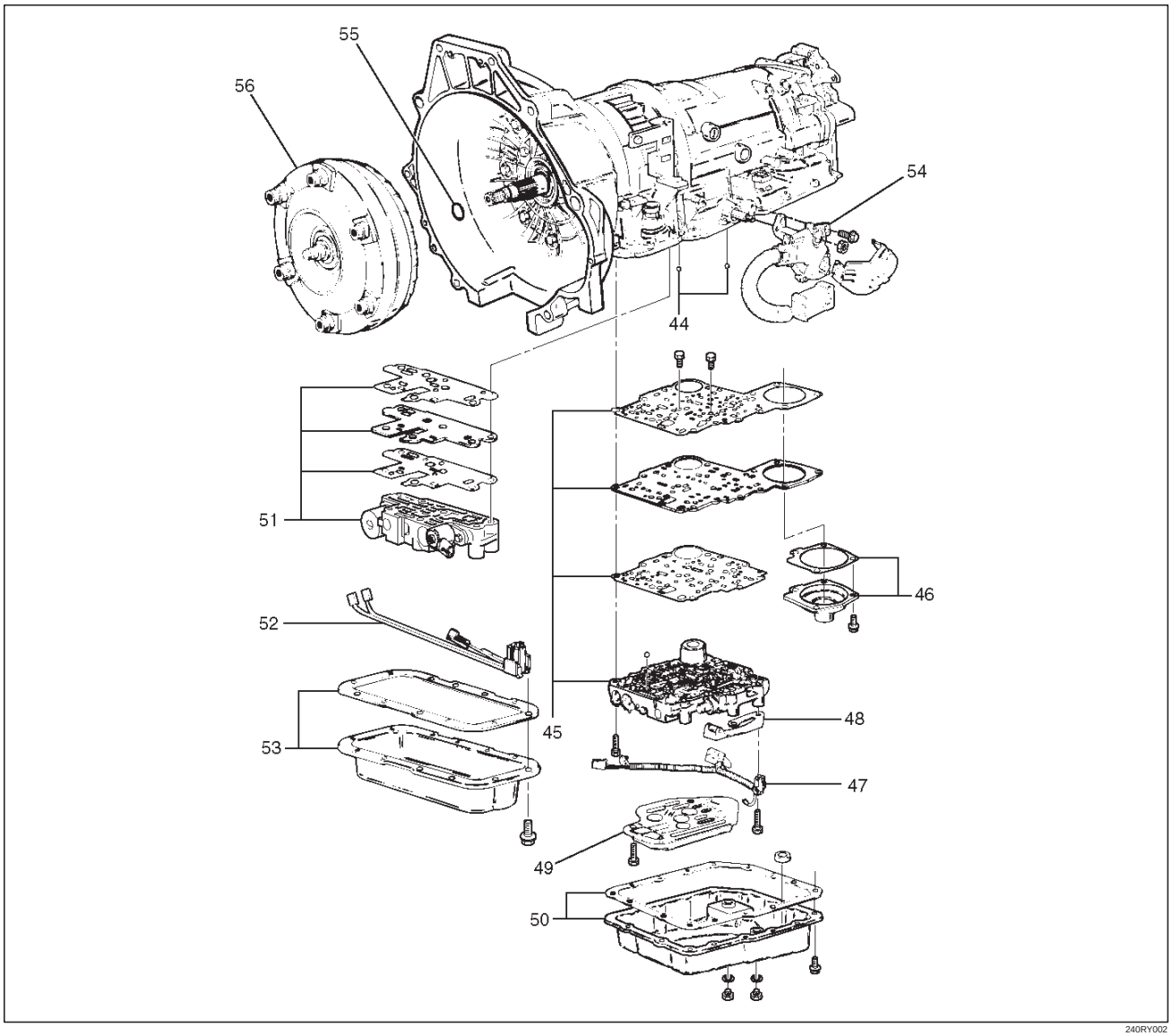

Downloaded from www.Manualslib.com manuals search engine

Converter Housing And Oil Pump Assembly

Disassembled View

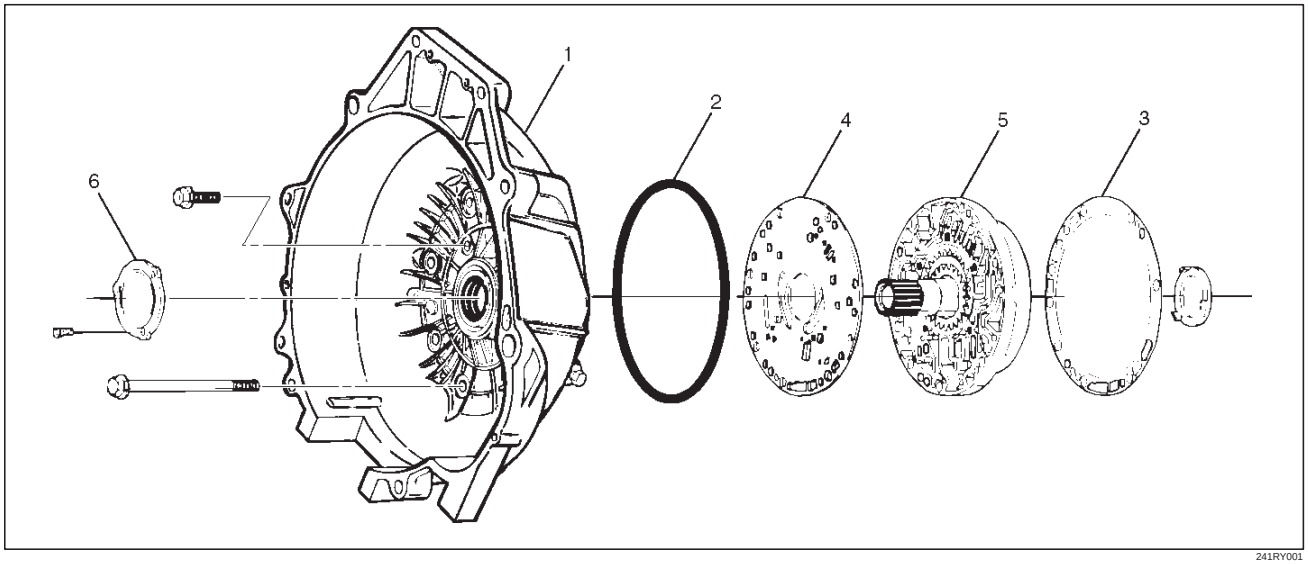

241RY001

Legend

(1) Converter Housing
(2) Outer Seal Ring
(3) Gasket
(4) Wear Plate
(5) Oil Pump Assembly
(6) Oil Seal Ring

Disassembly

1. Remove oil pump assembly from converter housing.
2. Remove outer seal ring.
3. Remove gasket.
4. Remove wear plate.
5. Remove oil seal ring.

Inspection And Repair

Visual Check:

If any damage, deformation, or local wear is found in a converter housing, outer seal ring, wear plate, or oil seal ring, replace it.

Reassembly

1. Install wear plate onto oil pump assembly.
2. Install converter housing onto complete oil pump assembly. Align with two short J–38588 guide pins on outer bolt holes.
   - Loosely install five 13mm bolts.
   - Center converter housing using J–38557 centering tool.
   - Tighten five inner 13mm bolts in an alternating pattern.

   Torque: 20 N•m (15 lb ft)

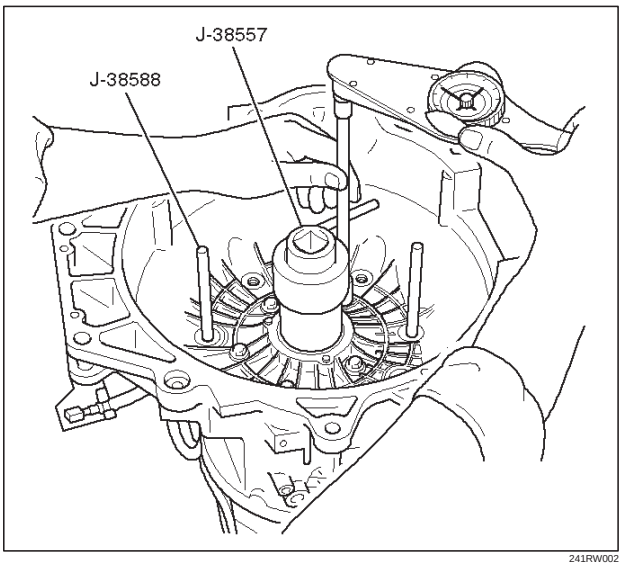

241RW002

3. Install oil seal ring (3 screws).

   Torque: 3 N•m (26 lb in)
4. Install gasket.
5. Install outer seal ring.

Downloaded from www.Manualslib.com manuals search engine

Oil Pump

Disassembled View

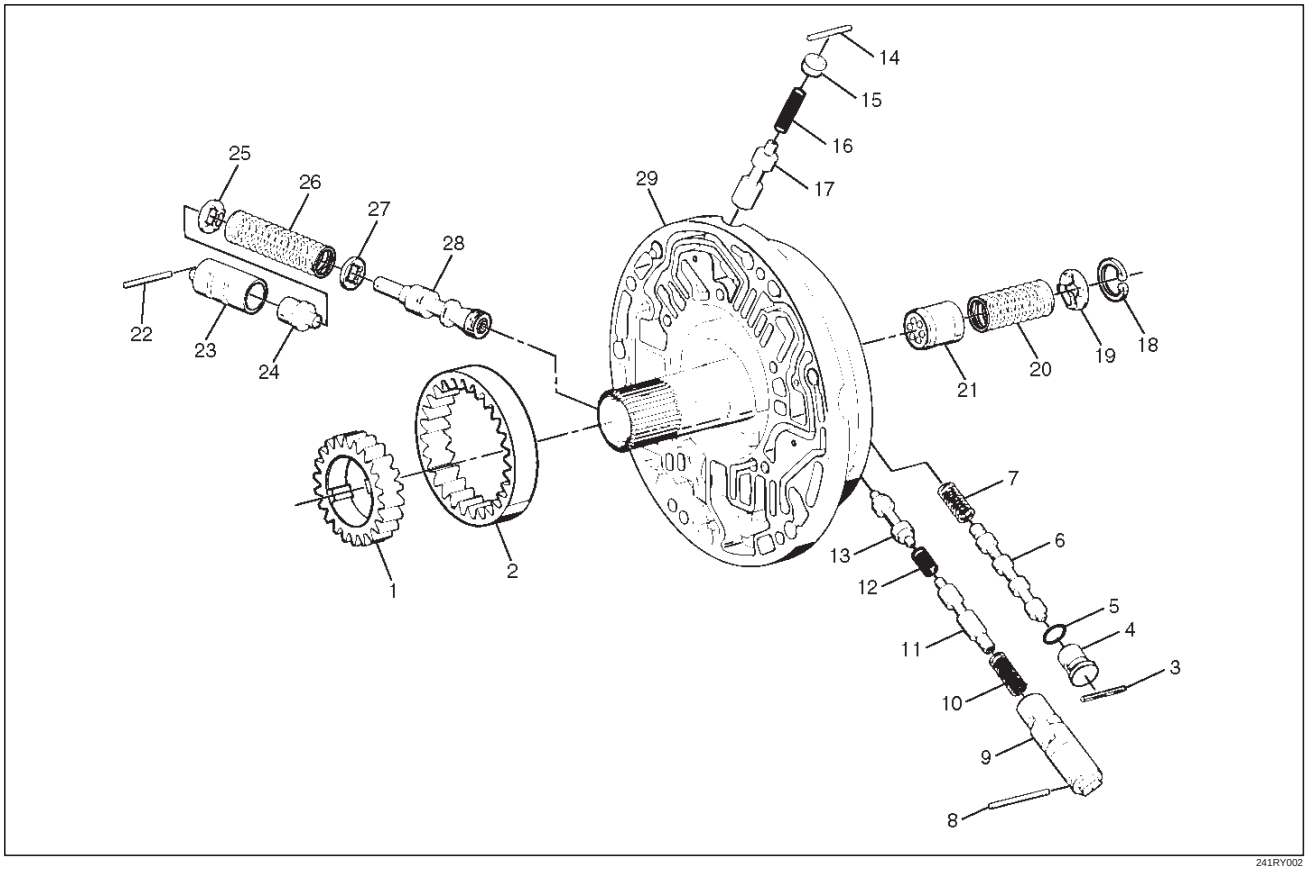

Legend

(1) Oil Pump Drive Gear
(2) Oil Pump Driven Gear
(3) Pin
(4) Plug
(5) Seal Ring
(6) Torque Converter Clutch Control Valve
(7) Converter Clutch Control Valve Spring
(8) Pin
(9) Converter Clutch Regulator Sleeve
(10) Converter Clutch Regulator Spring
(11) Converter Clutch Regulator Valve
(12) Isolator Spring
(13) Isolator Valve
(14) Pin
(15) Enable Valve Spring Guide
(16) Enable Valve Spring
(17) Enable Valve
(18) Snap Ring
(19) Spring Seat
(20) Throttle Signal Accumulator Spring
(21) Throttle Signal Accumulator Piston
(22) Sleeve Pin
(23) Boost Valve Sleeve
(24) Boost Valve
(25) Spring Seat
(26) Pressure Regulator Valve Spring
(27) Spring Seat
(28) Pressure Regulator Valve
(29) Oil Pump Assembly

Disassembly

1. Remove oil pump drive gear (1) and driven gear (2).
2. Remove pin (3) from oil pump assembly (29).
3. Remove plug (4) and seal ring (5), torque converter clutch control valve (6) and spring (7).
4. Remove pin (8) from oil pump assembly (29).
5. Remove torque converter regulator sleeve (9), converter clutch regulator spring (10), converter clutch regulator valve (11), isolator spring (12) and isolator valve (13).
6. Remove pin (14) from oil pump assembly (29).
7. Remove enable valve spring (16), spring guide (15) and enable valve (17).
8. Remove snap ring (18) from oil pump assembly (29).

Downloaded from www.Manualslib.com manuals search engine

9. Remove spring seat (19), spring (20) and throttle signal accumulator piston (21).
10. Remove sleeve pin (22) from oil pump assembly (29).
11. Remove boost valve sleeve (23), boost valve (24), spring seat (25), valve spring (26), spring seat (27), and pressure regulator valve (28).

Inspection And Repair

Visual Check:

If any damage, deformation or wear is found, replace the damaged part.

Reassembly

1. Lubricate and preinstall pressure regulator spring seat (27) on valve (28), with the flat side against shoulder.
2. Install pressure regulator valve (28) and spring seat (27) assembly, valve spring (26), and spring seat (25) with the flat side away from spring to oil pump assembly (29).
3. Assemble boost valve (24) into sleeve (23).
4. Install boost valve and sleeve assembly, and sleeve pin (22) to oil pump assembly (29).
5. Install throttle signal accumulator piston (21), spring (20), and spring seat (19), with the flat side away from the spring, and snap ring (18) to oil pump assembly (29).
6. Install enable valve (17), spring guide (15), enable valve spring (16) and retainer pin (14) to oil pump assembly (29).
7. Assemble torque converter regulator spring (10) and torque converter regulator valve (11) into sleeve (9).
8. Install isolator valve (13), isolator valve spring (12) and the torque converter regulator sleeve and valve assembly into the oil pump assembly (29).
9. Install torque converter clutch control valve spring (7), torque converter clutch control valve (6), plug (4) and seal ring (5), and retainer pin (3) to oil pump assembly (29).
10. Install oil pump driven gear (2) and drive gear (1).

Downloaded from www.Manualslib.com manuals search engine

Main Case Valve Body

Disassembled View

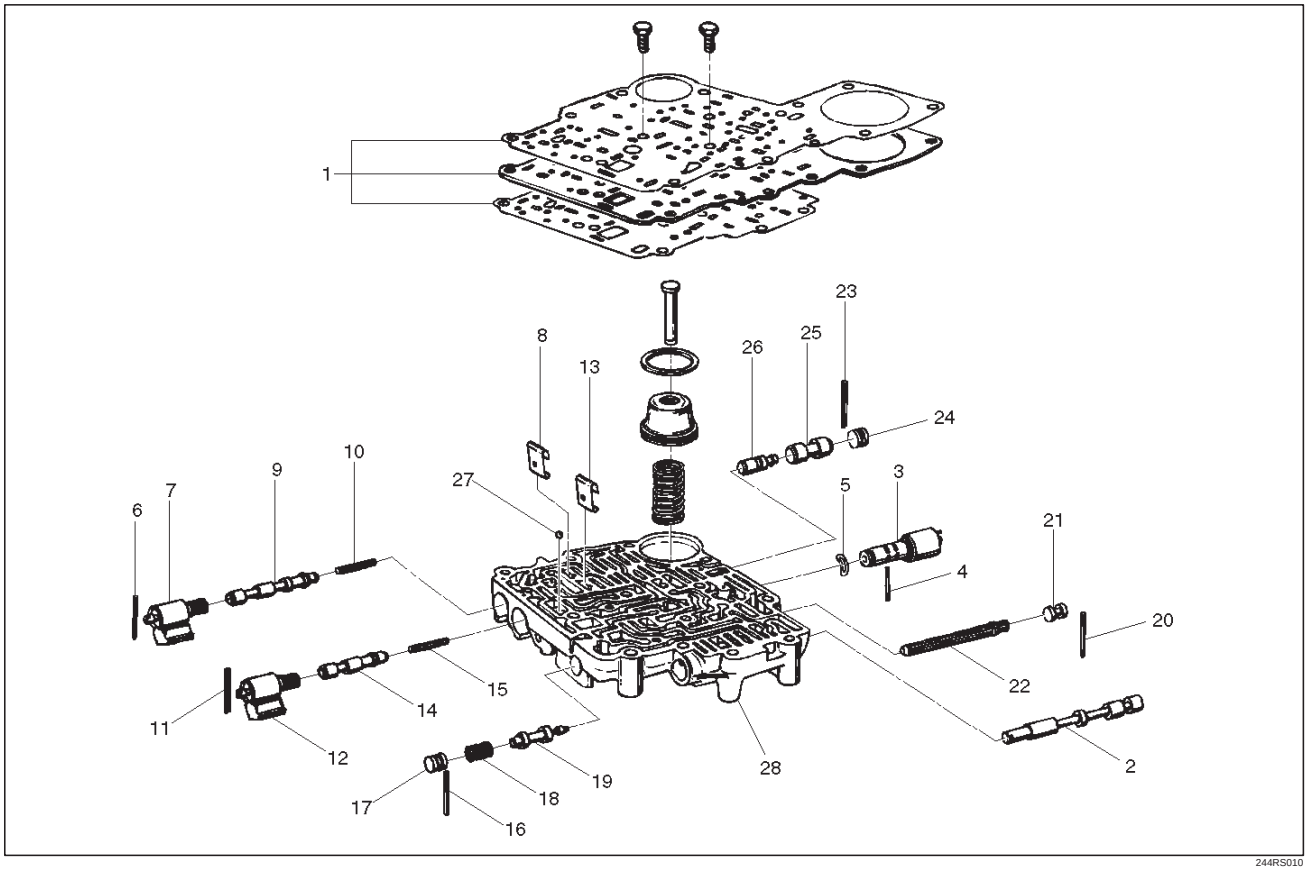

244RS010

Legend

(1) Gaskets and Transfer Plate
(2) Manual Valve
(3) Band Control Solenoid
(4) Pin
(5) Waved Washer
(6) Spring Pin
(7) Solenoid A
(8) Retainer
(9) 1–2/3–4 Shift Valve
(10) Spring
(11) Spring Pin
(12) Solenoid B
(13) Retainer
(14) 2–3 Shift Valve
(15) Spring
(16) Spring Pin
(17) Plug
(18) Spring
(19) Low Pressure Control Valve
(20) Spring Pin
(21) Plug
(22) Band Control Screen Assembly
(23) Spring Pin
(24) Plug
(25) 1–2 Accumulator Valve
(26) 1–2 Accumulator Control Valve
(27) Check Ball
(28) Main Case Valve Body

Disassembly

1. Remove two 11mm bolts from valve body (28), then remove gaskets and transfer plate (1).
2. Remove manual valve (2).
3. Push in band control solenoid (3) to compress waved washer (5), and remove pin (4).
4. Remove band control solenoid (3) and waved washer (5).
5. Remove spring pin (6) with a 3 mm dia punch.
6. Remove solenoid A (7) by grasping the metal tip. Do not grasp the connector housing.
7. Remove retainer (8), 1–2/3–4 shift valve (9), and spring (10).
8. Remove spring pin (11) with a 3 mm dia punch.
9. Remove solenoid B (12) by grasping the metal tip. Do not grasp the connector housing.

Downloaded from www.Manualslib.com manuals search engine

10. Remove retainer (13), 2–3 shift valve (14), and spring (15).
11. Remove spring pin (16), plug (17), spring (18), and low pressure control valve (19).
12. Remove spring pin (20), plug (21), and band control screen assembly (22).
13. Remove spring pin (23), plug (24), 1–2 accumulator valve (25), and 1–2 accumulator control valve (26).
14. Remove check ball (27) from valve body (28).

Inspection And Repair

Inspect for the following, and replace any damaged or worn parts:

1. Damage or wear to each valve.
2. Damage in oil passeges.
3. Cracks or damage to valve body.
4. Valve operations.
5. Spring fatigue.

Reassembly

1. Install 1–2 accumulator control valve (26), 1–2 accumulator valve (25), plug (24), and spring pin (23).
2. Install band control screen assembly (22), plug (21), and spring pin (20).
3. Install low pressure control valve (19), spring (18), plug (17), and spring pin (16).
4. Install spring (15), 2–3 shift valve (14), retainer (13), solenoid B (12), and spring pin (11).
5. Install spring (10), 1–2/3–4 shift valve (9), retainer (8), solenoid A (7), and spring pin (6).
6. Install waved washer (5), band control solenoid (3), and pin (4).
7. Install manual valve (2).
8. Install check ball (27) to valve body (28).
9. Install gasket (valve body/transfer plate) and transfer plate using two J–3387–2 guide pins.
   - Install two 11mm bolts.

   Torque: 13 N•m (113 lb in)

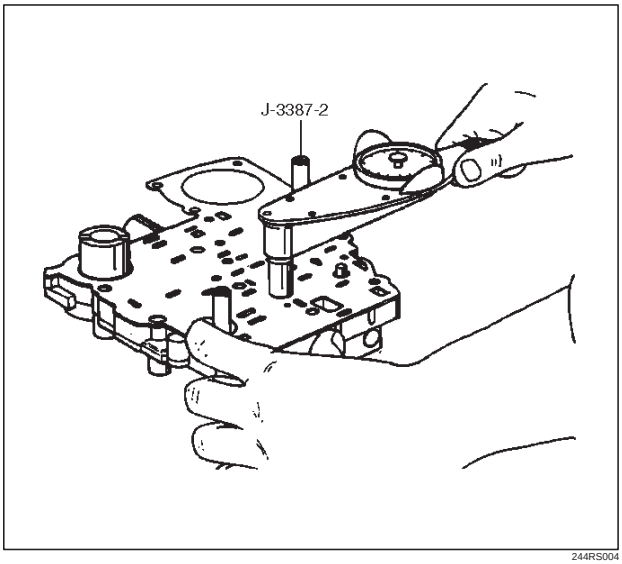

   - Install gasket (transfer plate/main case).

Downloaded from www.Manualslib.com manuals search engine

Adapter Case Valve Body

Disassembled View

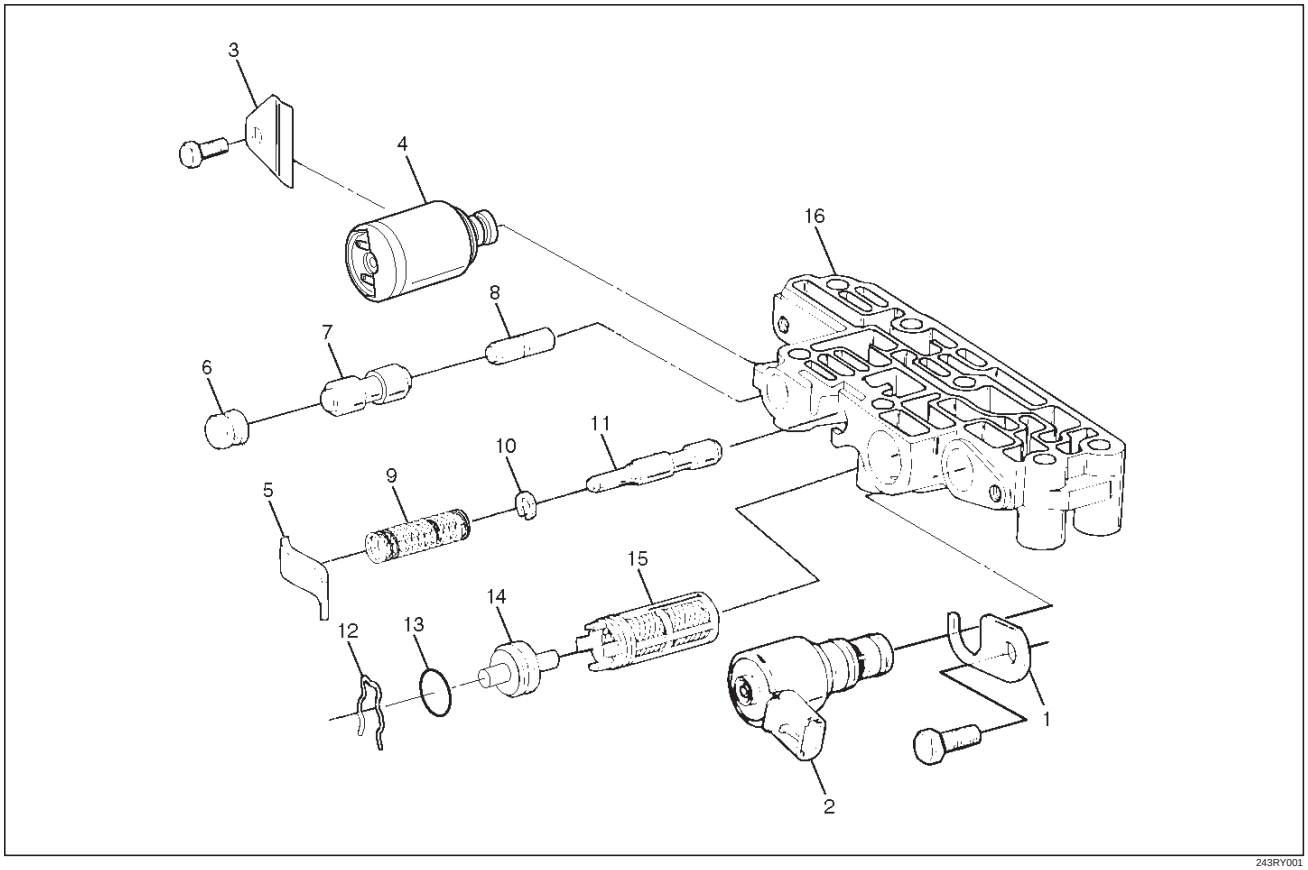

243RY001

Legend

(1) Bracket
(2) Converter Clutch PWM Solenoid
(3) Retainer
(4) Force Motor Solenoid
(5) Retainer
(6) Plug
(7) 3/4 Accumulator Valve
(8) 3/4 Accumulator Control Valve
(9) Spring
(10) Retaining Ring
(11) Feed Limit Valve
(12) Plug Retainer
(13) O–Ring
(14) Plug
(15) Force Motor Screen Assembly
(16) Adapter Case Valve Body

Disassembly

1. Remove 11mm bolt from valve body.
   - Remove bracket (1) and converter clutch PWM solenoid (2).
2. Remove 11mm bolt and retainer (3) from valve body.
   - Remove force motor solenoid (4).
3. Remove retainer (5), plug (6), 3/4 accumulator valve (7), and 3/4 accumulator control valve (8).
4. Remove spring (9), retaining ring (10), and feed limit valve (11).
5. Remove plug retainer (12), O–ring (13), plug (14), and force motor screen assembly (15).
   - Use 5 mm bolt to pull plug.

Inspection And Repair

Inspect for the following, and replace any damaged or worn parts:

1. Damage or wear to each valve.
2. Damage in oil passeges.
3. Cracks or damage to valve body.
4. Valve operations.
5. Spring fatigue.

Reassembly

1. Install force motor screen assembly (15), plug (14), O–ring (13), and plug retainer (12).

Downloaded from www.Manualslib.com manuals search engine

2. Install feed limit valve (11), retaining ring (10), and spring (9).
3. Install 3/4 accumulator control valve (8), 3/4 accumulator valve (7), plug (6), and retainer (5).
4. Install force motor solenoid (4).
   - Place solenoid terminals pointing towards mating face.
   - Install retainer (3) and bolt.

   Torque: 10 N•m (87 lb in)
5. Install converter clutch PWM solenoid (2) with two O–rings (2) and bracket (1) to valve body.
   - Install bolt.

   Torque: 10 N•m (87 lb in)

Downloaded from www.Manualslib.com manuals search engine

Third Clutch And Sprag Unit

Disassembled View

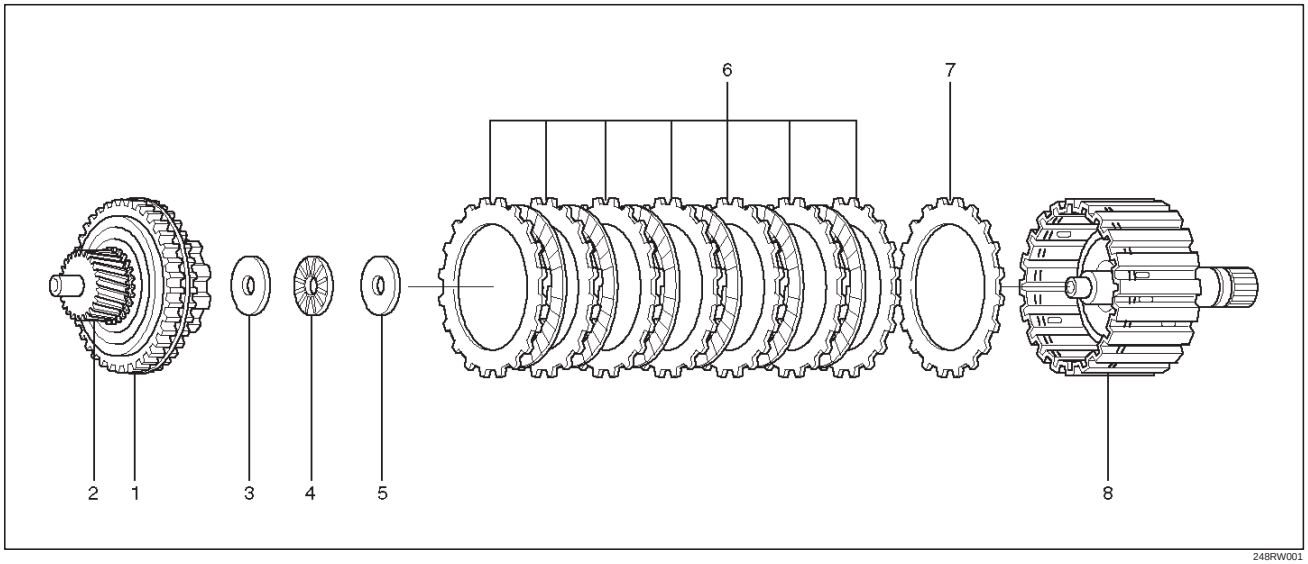

248RW001

Legend

(1) Retaining Ring
(2) Input Sun Gear and Sprag Unit Assembly
(3) Retaining Washer
(4) Bearing
(5) Thrust Washer
(6) Clutch Plates
(7) Third Clutch Spring Cushion Plate
(8) Third Clutch Drum Assembly

Disassembly

1. Place the third clutch drum and intermediate shaft assembly upright, using the overdrive internal gear as a support.
2. Locate the ends of the retaining ring. Depress one end of the ring using a small screwdriver instead of the depressor handle provided with the tool J-38450-A. Slide one blade down between the third clutch drum and the retaining ring.
3. Remove a screwdriver and repeat this step for the other end of retaining ring.
4. Install the remaining four blades approximately (five) notches apart using a screwdriver to depress the retaining ring.
5. Pull up on input sun gear and sprag unit assembly (1 and 2) to release the retaining ring from third clutch drum assembly (8).
6. Remove the tool blades.

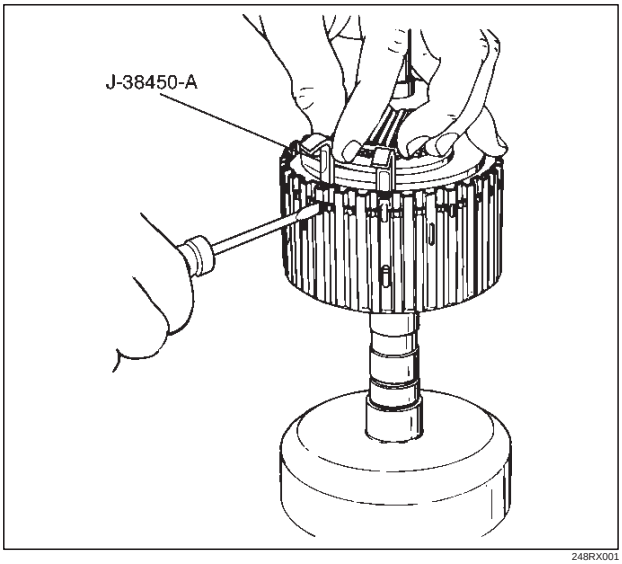

248RX001

7. Remove retaining washer (3), bearing (4), thrust washer (5), and clutch plates (6 and 7) from the third clutch drum assembly (8).

Inspection And Repair

Visual Check:

If any damage, deformation or wear is found, replace the damaged part.

Downloaded from www.Manualslib.com manuals search engine

Reassembly

1. Place third clutch drum and intermediate shaft assembly upright, using the overdrive internal gear as a support.
2. Install third clutch spring cushion plate (7), bevel face down.
3. Install third clutch plates (6) into third clutch drum assembly (8). Start with the steel clutch plate and alternate with lined plates.
4. Install thrust washer (5), bearing (4), and retaining washer (3).
5. Fully engage the hub splines of the input sun gear and sprag unit assembly (2) into the third clutch inner tangs.
   - Simultaneously rotate the outer sprag race to engage into the third clutch drum assembly (8).
6. Place J-38450-A blades between the retaining ring and the third clutch drum apporximately (five) notches apart, and one blade at each end of the retaining ring (1). Push down on sprag assembly until the assembly is seated into the third clutch drum assembly (8).
7. Remove the tool blades and engage retaining ring into groove of third clutch drum.

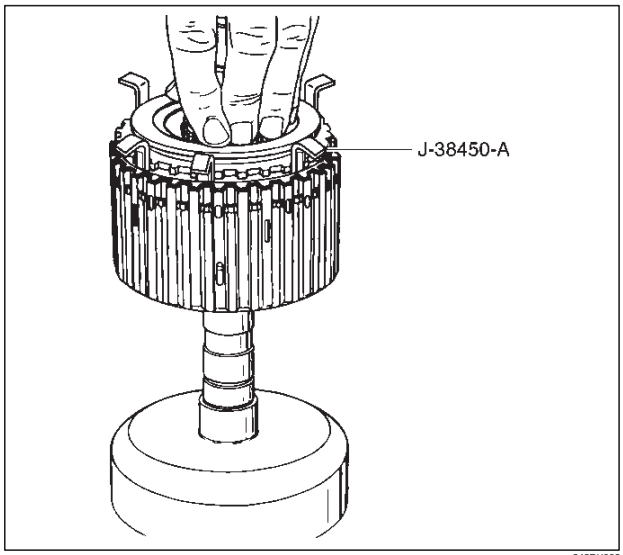

248RX002

Downloaded from www.Manualslib.com manuals search engine

Third Clutch

Disassembled View

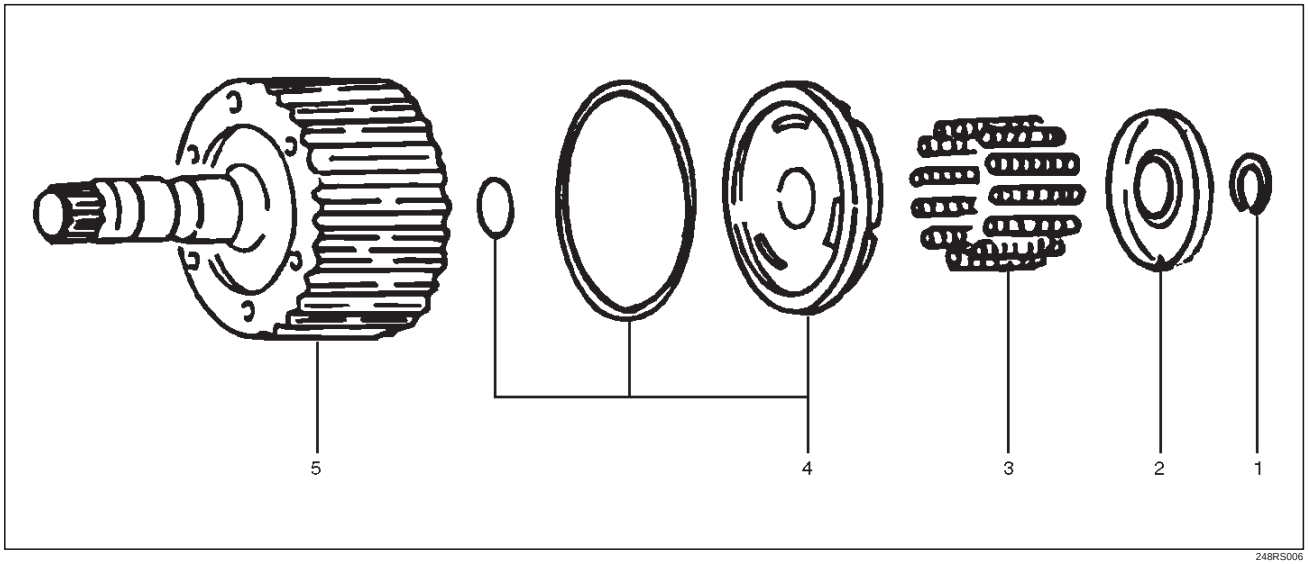

248RS006

Legend

(1) Retaining Ring
(2) Spring Seat
(3) Springs
(4) Piston Assembly
(5) Third Clutch Drum

Disassemble

1. Compress spring seat using the J–23075 spring compressor and J–23075–12 adapter tool.

NOTE: Do not over–stress the springs and seat. This will cause damage to the spring seat.

- Remove the tool.
- Remove retaining ring (1).

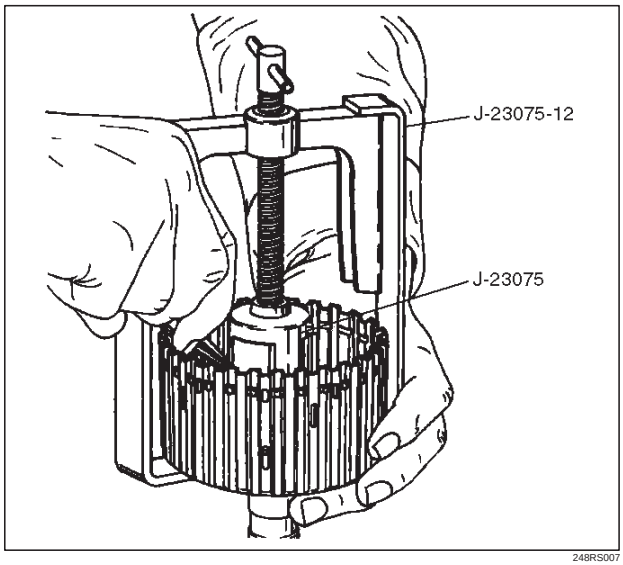

248RS007

2. Release the spring seat (2).

NOTE: Do not let the spring seat catch in the ring groove.

- Remove spring seat (2) and springs (3).

3. Remove piston assembly (4) from third clutch drum (5).

Inspection And Repair

Visual check:

If any damage, deformation or wear is found, replace the damaged part.

Operation check:

Shake the piston and listen for check ball movement indicates proper check ball operation. Replace the piston if the check ball is missing or falls out.

Reassembly

1. The lip of the piston seal must point toward the front of the transmission. Lubricate the seal lip with transmission fluid.
   - Install piston assembly (4) into the third clutch drum (5). Use the J–23084 third clutch piston installer to protect the outer seal during installation.
   - Remove the seal installer.

Downloaded from www.Manualslib.com manuals search engine

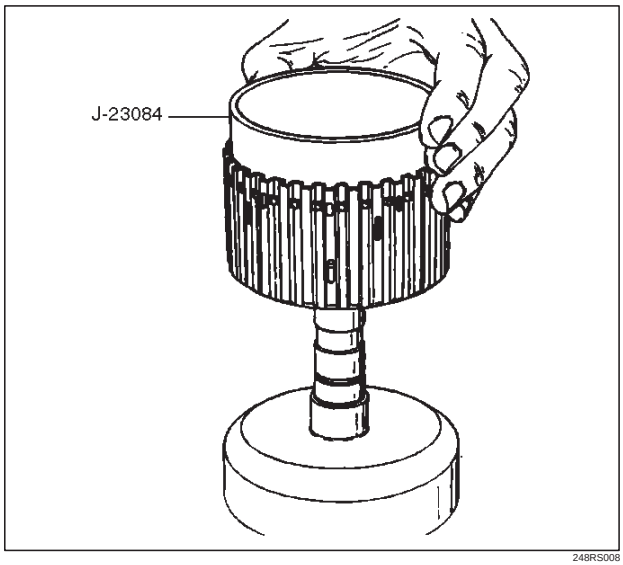

248RS008

2. Install twelve springs (3) and spring seat (2).
3. Place retaining ring (1) onto spring seat.
   - Compress the piston springs, using the J–23075 piston spring compressor and J–23075–12 adapter.

CAUTION: Do not over stress the springs and seat. Do not let the spring seat catch in the ring groove. This may cause damage to the spring seat.

- Install spring seat retaining ring (1).
- Remove the piston spring compressor and adapter.

Downloaded from www.Manualslib.com manuals search engine

Sprag Unit

Disassembled View

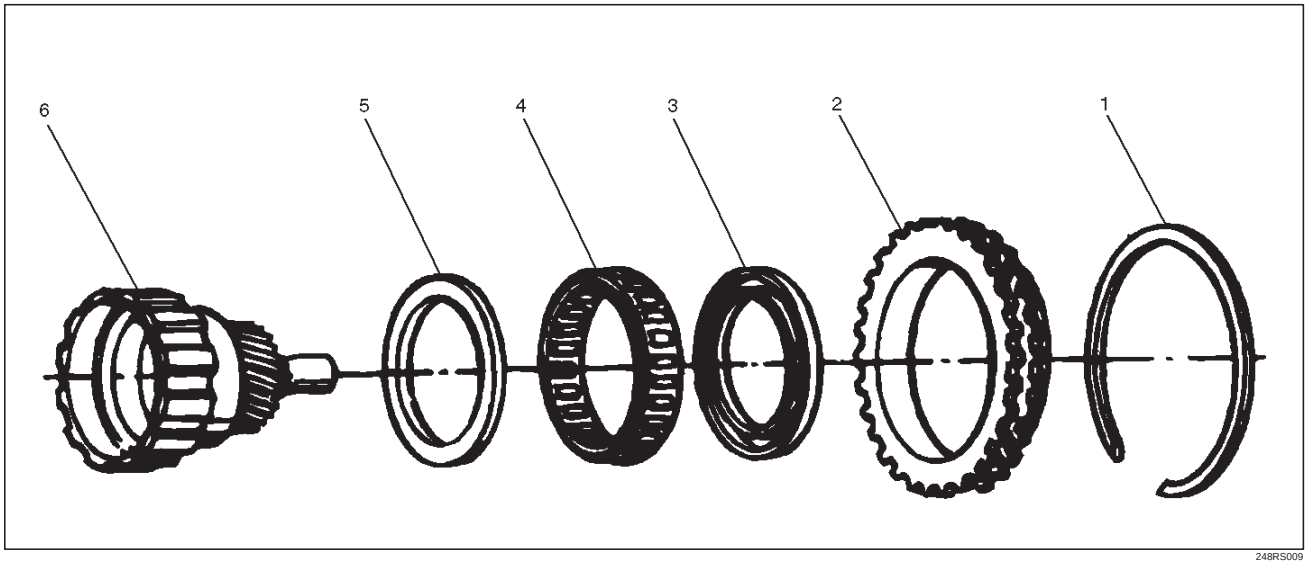

248RS009

Legend

(1) Retaining Ring
(2) Sprag Outer Race
(3) Ring
(4) Sprag Assembly
(5) Ring
(6) Third Clutch Hub and Sun Gear Assembly

Disassembly

1. Remove the sprag outer race, retaining ring, and sprag assembly from the third clutch hub and sun gear assembly.
2. Remove the rings and sprag assembly from the sprag outer race.

Inspection And Repair

Visual Check:

If any damage, deformation or wear is found, replace the damaged part.

Reassembly

NOTE: Flared shoulder of the sprag cage faces the sun gear. This procedure must be followed exactly to be sure that the sprag assembly is installed properly.

1. Install rings and sprag assembly onto the third clutch hub and sun gear.
2. Install sprag outer race and retaining ring assembly over the sprag cage assembly.
   - Place third clutch hub and sun gear assembly on a flat surface, sun gear facing up. Place sprag outer race and sprag assembly over the sun gear assembly, push down and turn the input sun counterclockwise at the same time.

NOTE: Check correct rotation by holding the sun gear in your left hand and turning the outer race. The outer sprag race should turn freely towards you and should lock turning away from you.

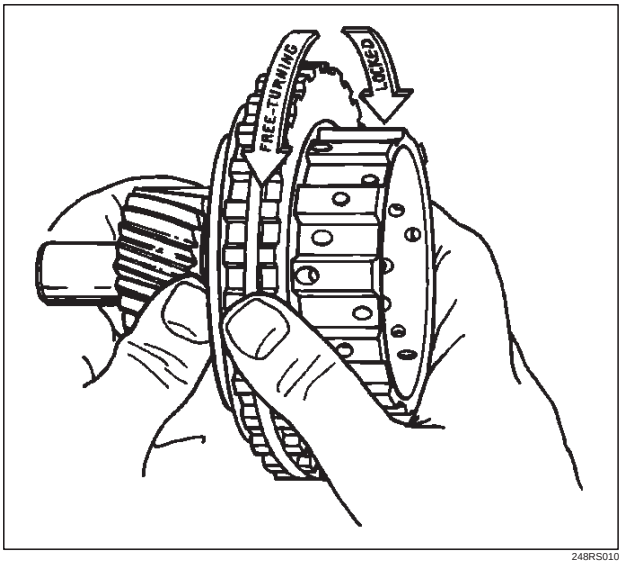

248RS010

Downloaded from www.Manualslib.com manuals search engine

Second Clutch

Disassembled View

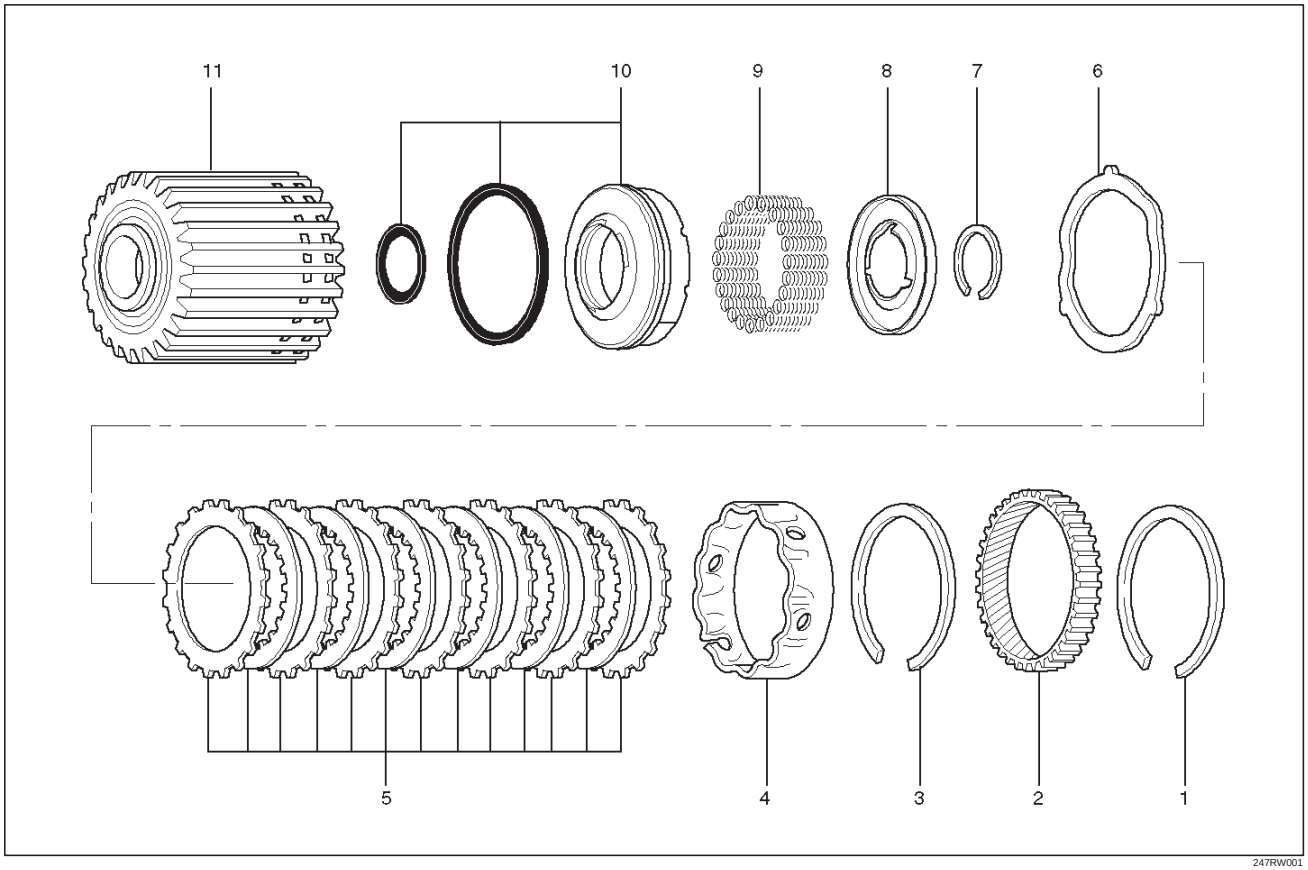

247RW001

Legend

(1) Retaining Ring
(2) Ring Gear
(3) Retaining Ring
(4) Spacer
(5) Clutch Plates
(6) Waved Washer
(7) Retaining Ring
(8) Spring Seat
(9) Springs
(10) Piston Assembly
(11) Second Clutch Drum

Disassembly

1. Remove retaining ring (1) from second clutch drum (11).
2. Remove ring gear (2), retaining ring (3), and spacer (4).
3. Remove clutch plates (5) and waved washer (6).
4. Remove retaining ring (7) using J–23327 compressor to compress the spring seat (8).
5. Remove spring seat (8), springs (9) and piston assembly (10) from second clutch drum (11).

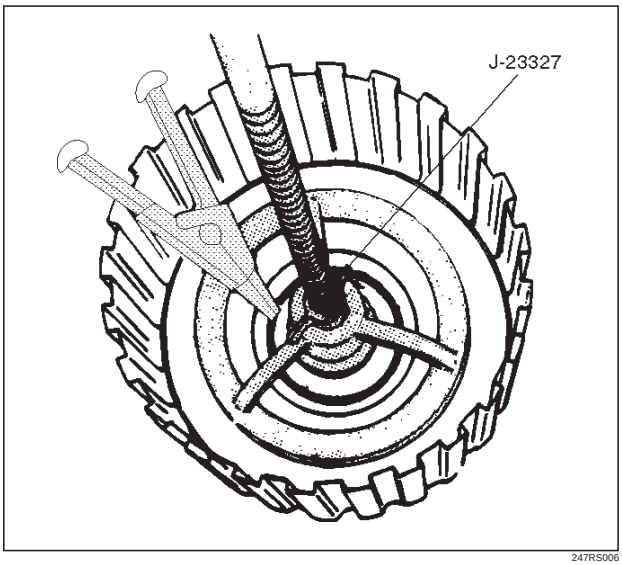

247RS006

Downloaded from www.Manualslib.com manuals search engine

Inspection And Repair

Visual Check:

If any damage, deformation or wear is found, replace the damaged part.

Operation Check:

Shake the piston and listen for check ball movement. Movement indicates proper check ball operation. Replace the piston if the check ball is missing or falls out.

Reassembly

1. Install piston assembly (10) into the second clutch drum (11).
   - Lubricate the lip seal with transmission fluid. Use the J–23080–A second clutch piston installer to protect the outer piston lip seal.

NOTE: Lip of the seal should point toward front of transmission.

- Remove the installer.

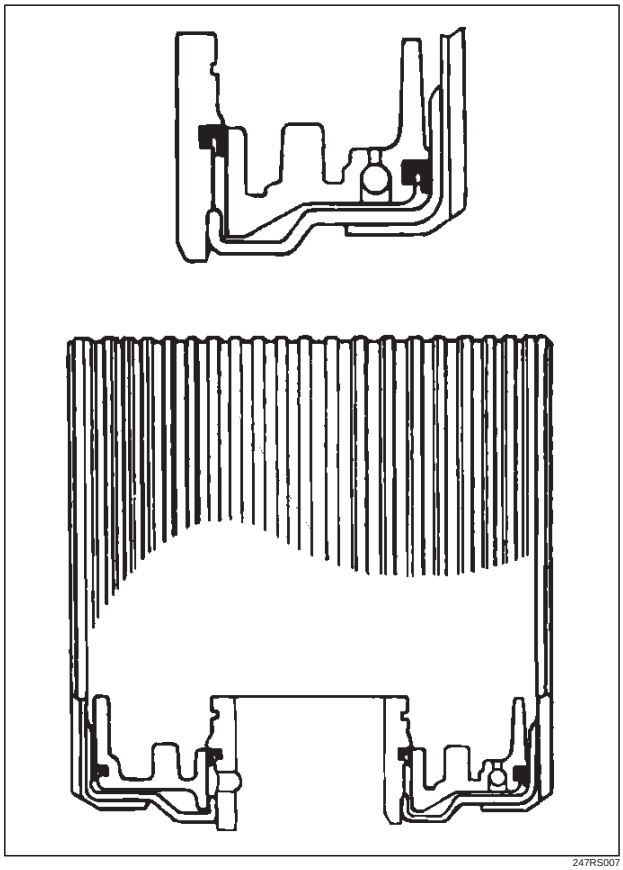

247RS007

2. Install twenty–two piston springs (9) and spring seat (8) on the second clutch piston (10). Place retaining ring (7) onto spring seat.
   - Use the J–23327 compressor to compress the piston springs.

NOTE: Do not let spring seat catch in ring groove.

- Remove the compressor.

3. Install waved plate (6) and clutch plates (5). Start with a steel plate and alternate with lined plates.
   - Align second clutch inner tangs.
4. Install spacer (4), with the fluted end toward clutch plates.
5. Install retaining ring (3), ring gear (2) and retaining ring (1).

Downloaded from www.Manualslib.com manuals search engine

3–4 Accumulator Piston

Disassembled View

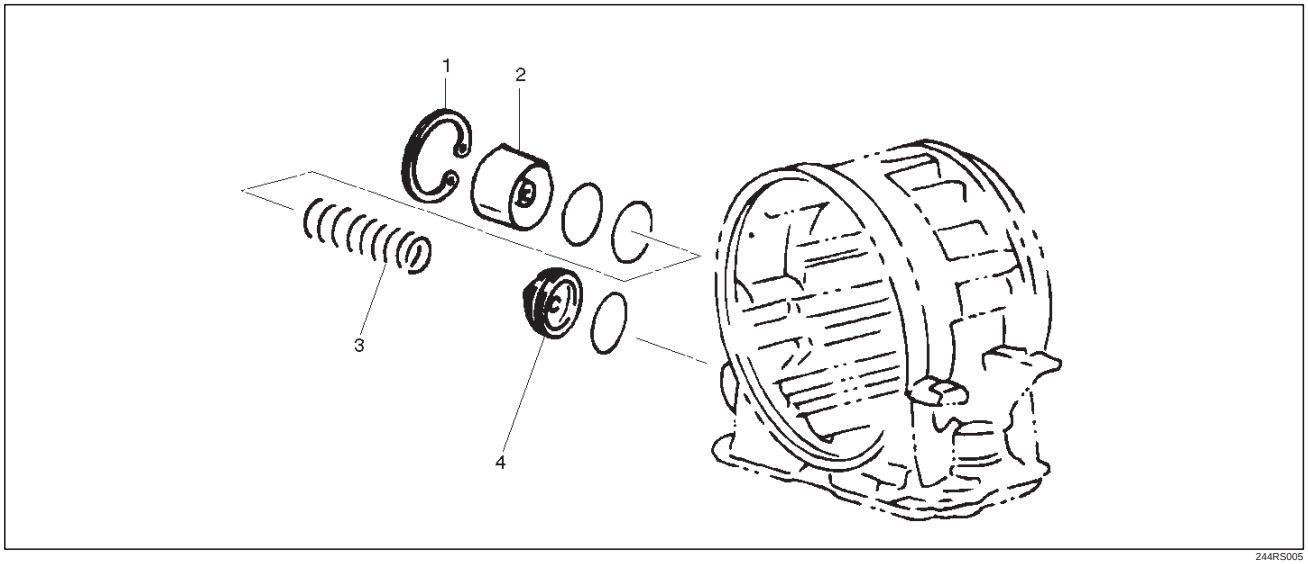

244RS005

Legend

(1) Snap Ring
(2) Cover
(3) Spring
(4) Piston Assembly

Disassembly

1. Install the J–38559–A cover compressor on adapter case.
   - Compress piston cover then remove snap ring.

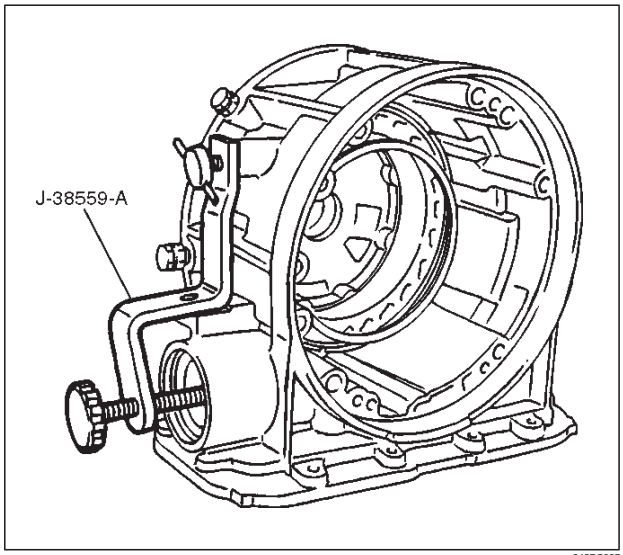

242RS007

2. Install the J–41096 cover remover and J–38584 adapter to center hole of cover.
   - Use the J–23907 slide hammer to remove cover.
3. Remove spring and piston assembly.

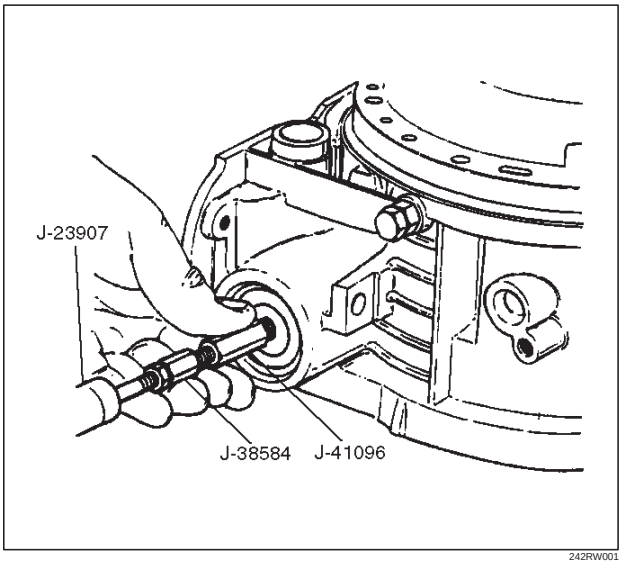

242RW001

Downloaded from www.Manualslib.com manuals search engine

Inspection And Repair

Visual Check:

If any damage, deformation or wear is found, replace the damaged part.

Reassembly

1. Place the J–38553 piston fitter into adaptor case and push the piston into position, using suitable diameter tube.
   - Remove the piston fitter.

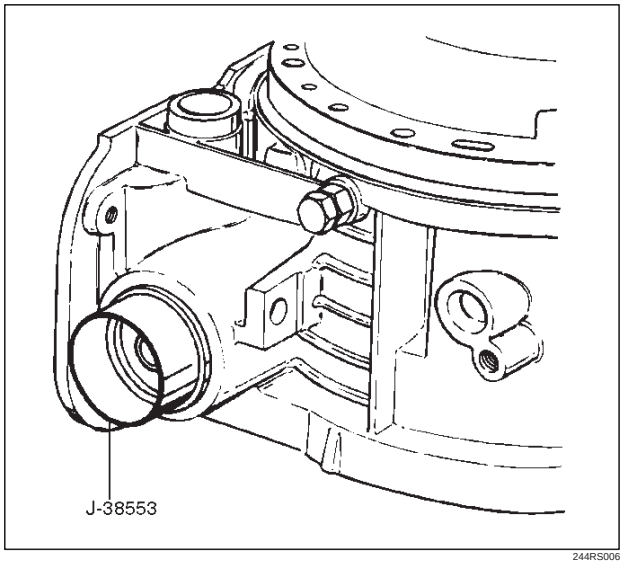

244RS006

2. Install spring and cover.
3. Install snap ring, using the J–38559–A compressor tool.
   - Install snap ring in groove.
   - Remove the compressor tool.

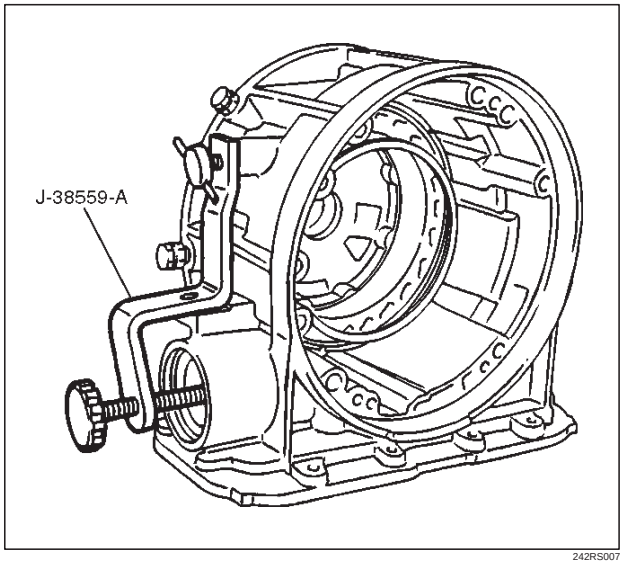

242RS007

Downloaded from www.Manualslib.com manuals search engine

Reverse Clutch Piston And Center Support

Disassembled View

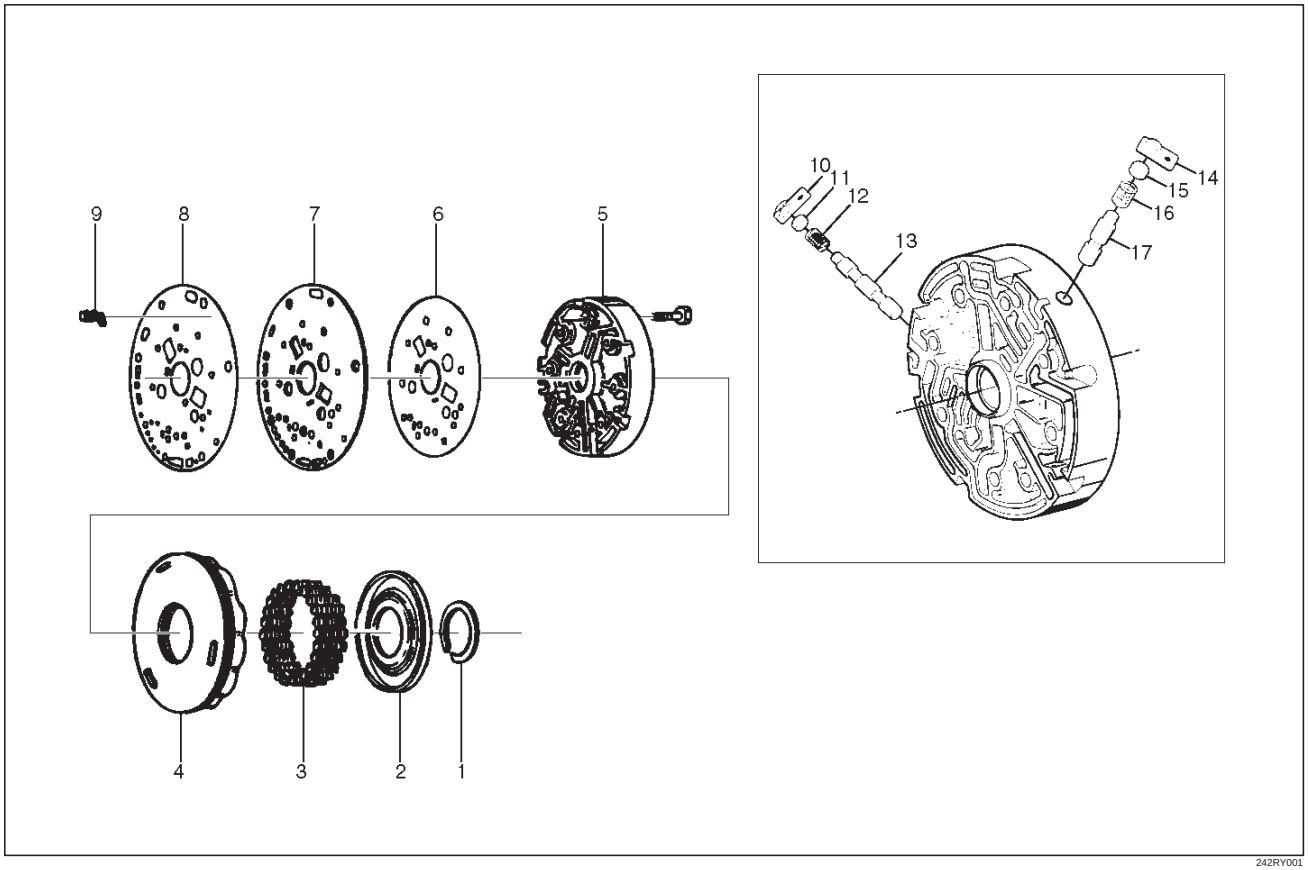

242RY001

Legend

(1) Retaining Ring
(2) Spring Seat
(3) Springs
(4) Piston Assembly
(5) Center Support
(6) Gasket
(7) Transfer Plate
(8) Gasket
(9) Restrictor
(10) Retainer Plate
(11) Plug
(12) Spring
(13) Overrun Lock Out Valve
(14) Retainer Plate
(15) Plug
(16) Spring
(17) Reverse Lock Out Control Valve

Disassembly

1. Install the J–23327 compressor tool on spring seat, then compress the spring seat.
   - Remove retaining ring (1).

NOTE: Do not over–stress the springs and seat, as this will cause damage to the spring seat.

- Remove the compressor tool.

Downloaded from www.Manualslib.com manuals search engine

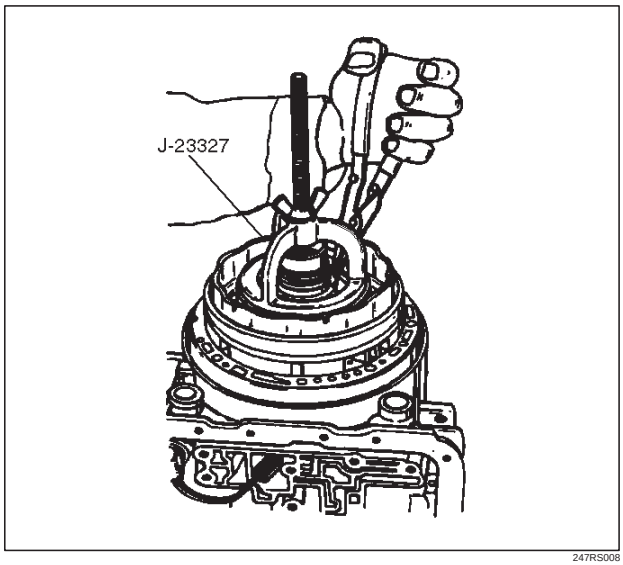

247RS008

2. Remove spring seat (2) and springs (3).
3. Remove piston assembly (4).
4. Remove 8 bolts from center support (5), then remove center support (5) from adapter case.
5. Remove gasket transfer plate/outer support (6), center support transfer plate (7), and gasket transfer plate/adapter case (8).
6. Remove restrictor (9) from adapter case housing.
7. Remove retainer plate (10), plug (11), spring (12), and overrun lock out valve (13) from center support (5).
8. Remove retainer plate (14), plug (15), spring (16) and reverse lock out valve (17) from center support (5).

Inspection And Repair

Visual Check:

If any damage, deformation or wear is found, replace the damaged part.

Reassembly

1. Install reverse lock out valve (17) and spring (16) to center support.

NOTE: Ensure correct assembly of valve. The spring should be located over the long small diameter end.

2. Install plug (15) and retainer plate (14).
3. Install overrun lock out valve (13) and spring (12) to center support.

NOTE: Ensure correct assembly of valve. The spring should be located over the long small diameter end.

4. Install plug (11) and retainer plate (10).
5. Place restrictor (9) in the lube overdrive channel in the adapter case housing.

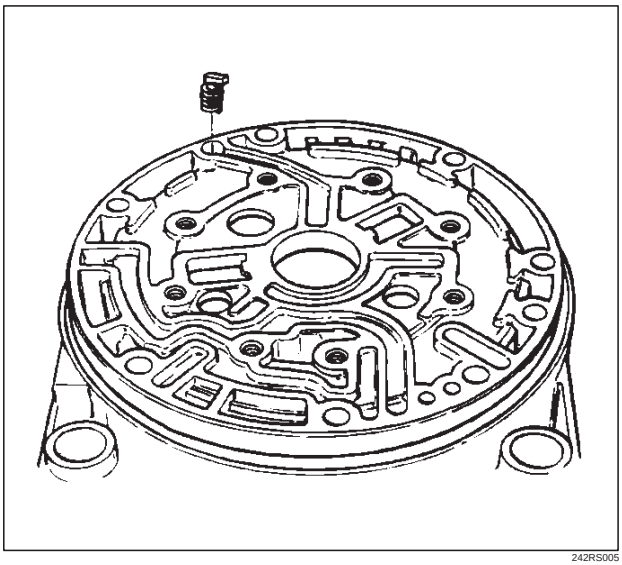

242RS005

6. Install gasket transfer plate/adapter case (8), center support transfer plate (7), and gasket transfer plate/center support (6).
7. Install center support (5) with 8 bolts.

Torque : 25 N•m (18 lb ft)

8. Install piston assembly (4) into center support (5).
9. Install twenty four springs (3), spring seat (2), and retaining ring (1).
   - Install the J–23327 compressor and compress spring seat (2) and springs (3), then seat snap ring (1) in groove.
   - Remove the tool.

Downloaded from www.Manualslib.com manuals search engine

Overrun Clutch And Turbine Shaft

Disassembled View

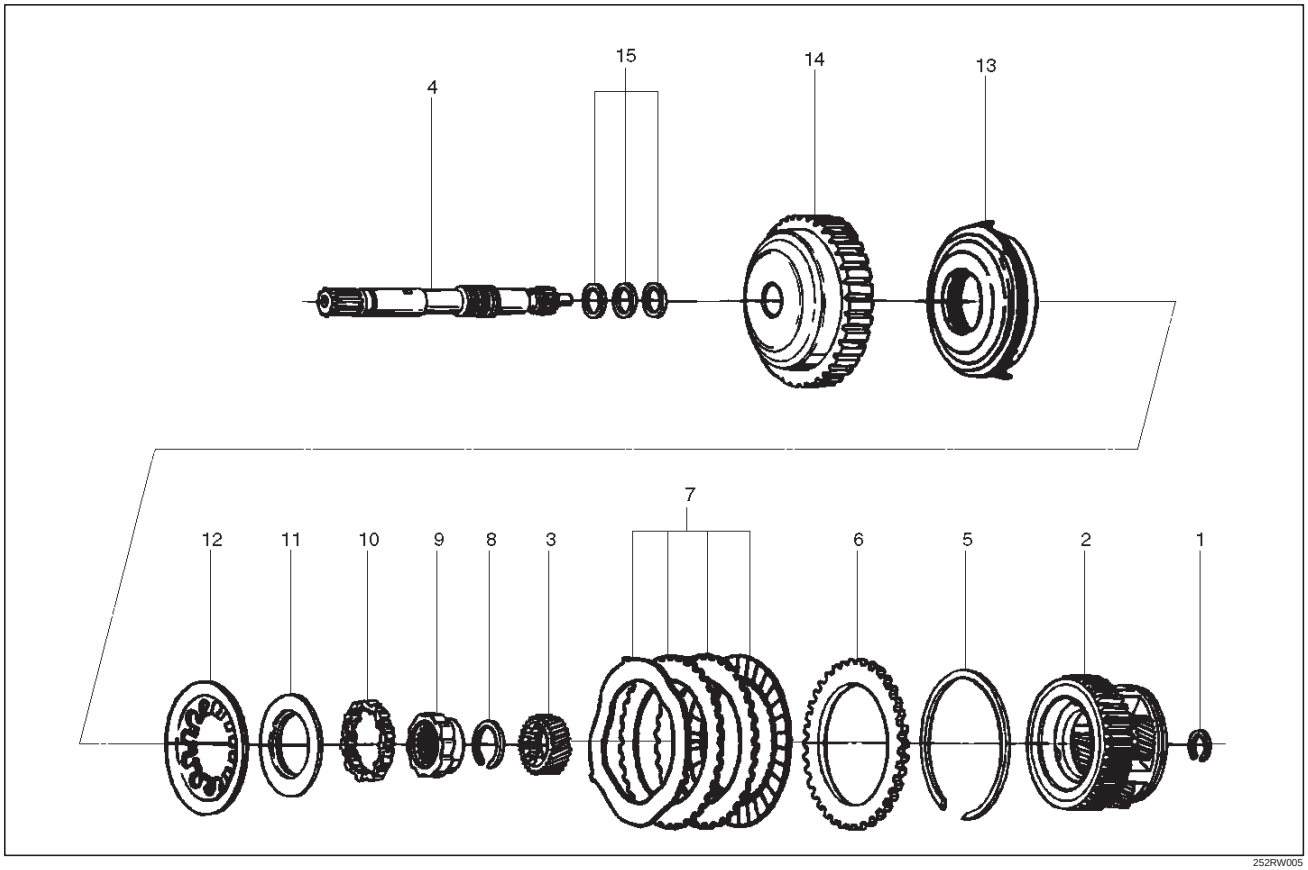

Legend

(1) Snap Ring
(2) Overdrive Carrier Assembly
(3) Sun Gear
(4) Turbine Shaft
(5) Snap Ring
(6) Backing Plate
(7) Clutch Plates
(8) Snap Ring
(9) Overrun Roller Clutch Cam
(10) Roller Clutch Assembly
(11) Overrun Clutch Release Spring Retainer
(12) Diaphragm Spring
(13) Piston Assembly
(14) Overrun Clutch Drum
(15) Turbine Shaft Seal Rings

Downloaded from www.Manualslib.com manuals search engine

Disassembly

1. Position overrun clutch assembly upright, using the overdrive internal gear as a support.
   - Remove snap ring (1).

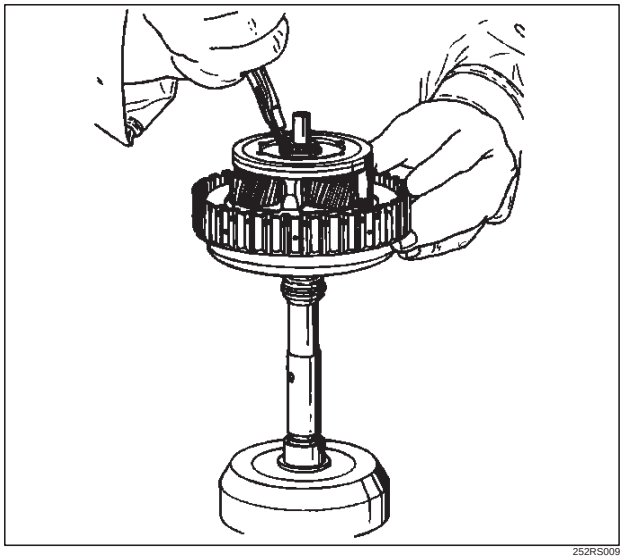

252RS009

2. Remove overdrive carrier assembly (2), sun gear (3) and turbine shaft (4).
3. Remove snap ring (5), backing plate (6), and clutch plates (7).
4. Compress diaphragm spring with the J–23327–91 compressor, then remove snap ring (8).

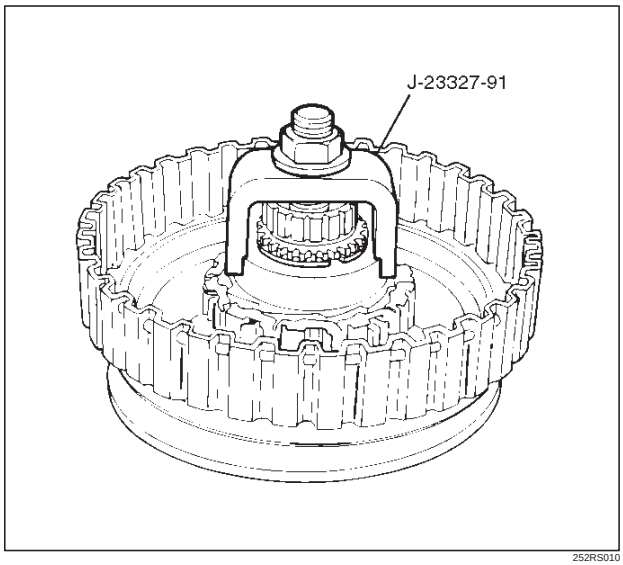

252RS010

5. Remove overrun roller clutch cam (9) and roller clutch assembly (10).
6. Remove overrun clutch release spring retainer (11) and diaphragm spring (12).
7. Remove piston assembly (13) from overrun clutch drum (14).
8. Remove turbine shaft seal rings (15).

Inspection And Repair

Overdrive Carrier Check

- Check pinion end play with a feeler gauge.

Clearance: 0.24mm–0.64mm (0.0094in–0.025in)

If clearance is outside specified value, replace overdrive carrier assembly.

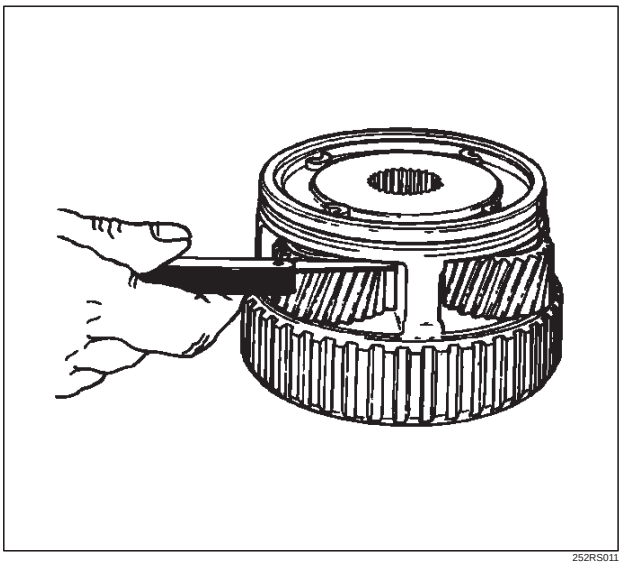

252RS011

Visual Check:

If any damage, deformation or local wear is found, replace the damaged part.

Reassembly

1. Install turbine shaft seal rings (15) with grease (petroleum jelly).

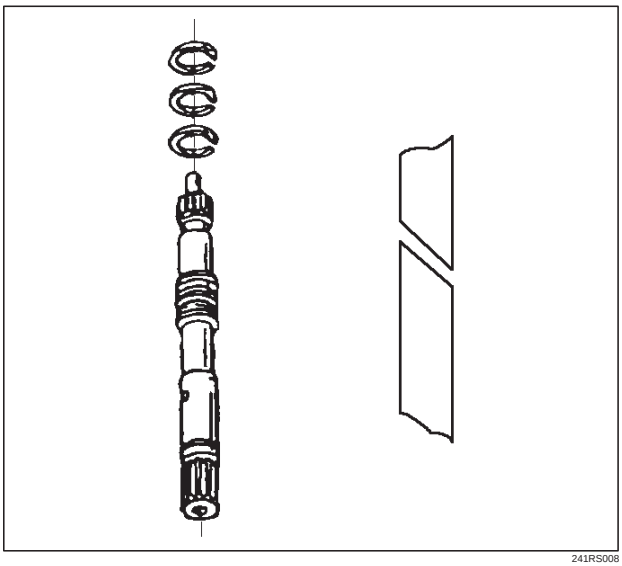

241RS008

Downloaded from www.Manualslib.com manuals search engine

2. Install the J–38555 inner installer on the drum (14).
   - Pre–install piston assembly into J–38555 outer installer.
   - Install overrun clutch piston assembly (13). Use the outer installer while pushing piston into drum (14).
   - Remove the installer.

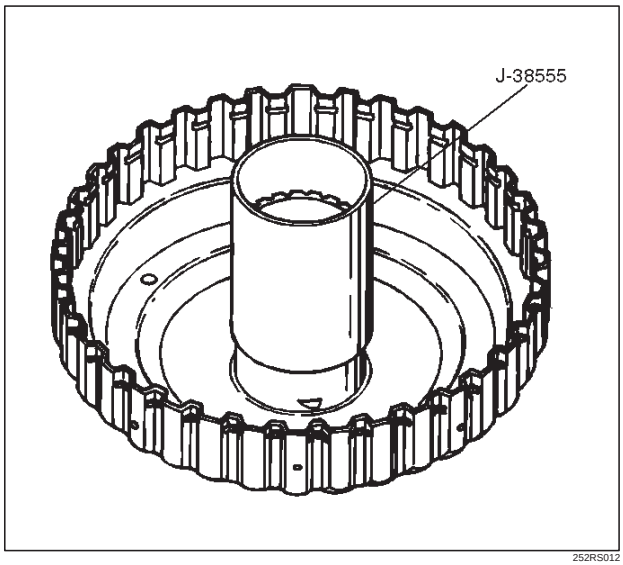

252RS012

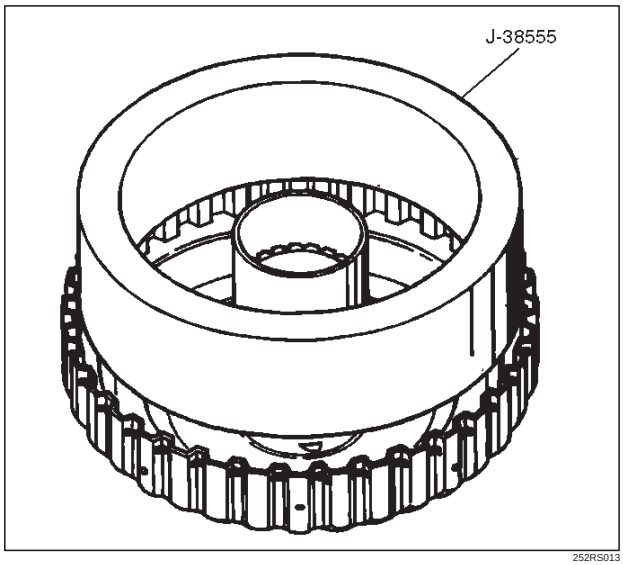

252RS013

3. Install diaphragm spring (12).
4. Install overrun clutch release spring retainer (11) (lip faces upwards), overrun roller clutch assembly (10), and cam (9).
5. Place snap ring loosely on spring retainer.
   - Hold the J–23327–91 compressor in a vise and compress piston return spring with compressor.
   - Set snap ring (8) in ring groove.
   - Remove the compressor.
6. Install clutch plates (7), start with steel plate and alternate with lined plates.
7. Install backing plate (6).
8. Install snap ring (5).
9. Install overdrive sun gear with countersink pointing downwards.
10. Install the overdrive carrier assembly (2).

NOTE: Turn the assembly in a counter–clockwise direction only until roller clutch enters the outer race. After installation, rotate the assembly and listen for loose rollers.

11. Install turbine shaft (4) and snap ring (1).

Downloaded from www.Manualslib.com manuals search engine

Main Data And Specification

General Specifications

				Remarks
Model			THM 4L30–E	
Engine			V6 3.5L 6VE1	DOHC
Type			Automatic four speed overdrive in 4th gear lock–up clutch torque converter	
Control systems	Shift control		Hydraulic	
	Shift pattern		Electronic	
	Shift quality		Electronic	
	Lock–up clutch		Electronic	
Gear ratio	1st		2.856	
	2nd		1.618	
	3rd		1.000	
	4th (O/D)		0.723	
	Reverse		2.000	
Gear set			Noiseless, high torque capability	
Oil used	Name		ATF DEXRON®–III	
	Q'ty liter (qt)		8.6 (9.1)	
Torque converter			2,100 ± 150	Stall speed (rpm)
	Reverse clutch	RC	4	Number of discs
	Second clutch	C2	6	
	Third clutch	C3	6	
	Brake band		Double wrap	
	Fourth clutch	C4	2	Number of discs
	Overrun clutch	OC	1	
	Overdrive	OFW	10	Number of rollers
	Principal	PFW	26	Number of sprags
	Ravigneaux planetary gear set	Input sun gear	30	Number of teeth
		Pinion gear	19	
		Long pinion	23	
		Ring gear	90	
		Long pinion	19	
		Output sun gear	46	
	Overdrive planetary gear set	Sun gear	31	
		Pinion gear	24	
		Ring gear	81	

Downloaded from www.Manualslib.com manuals search engine

Torque Specifications

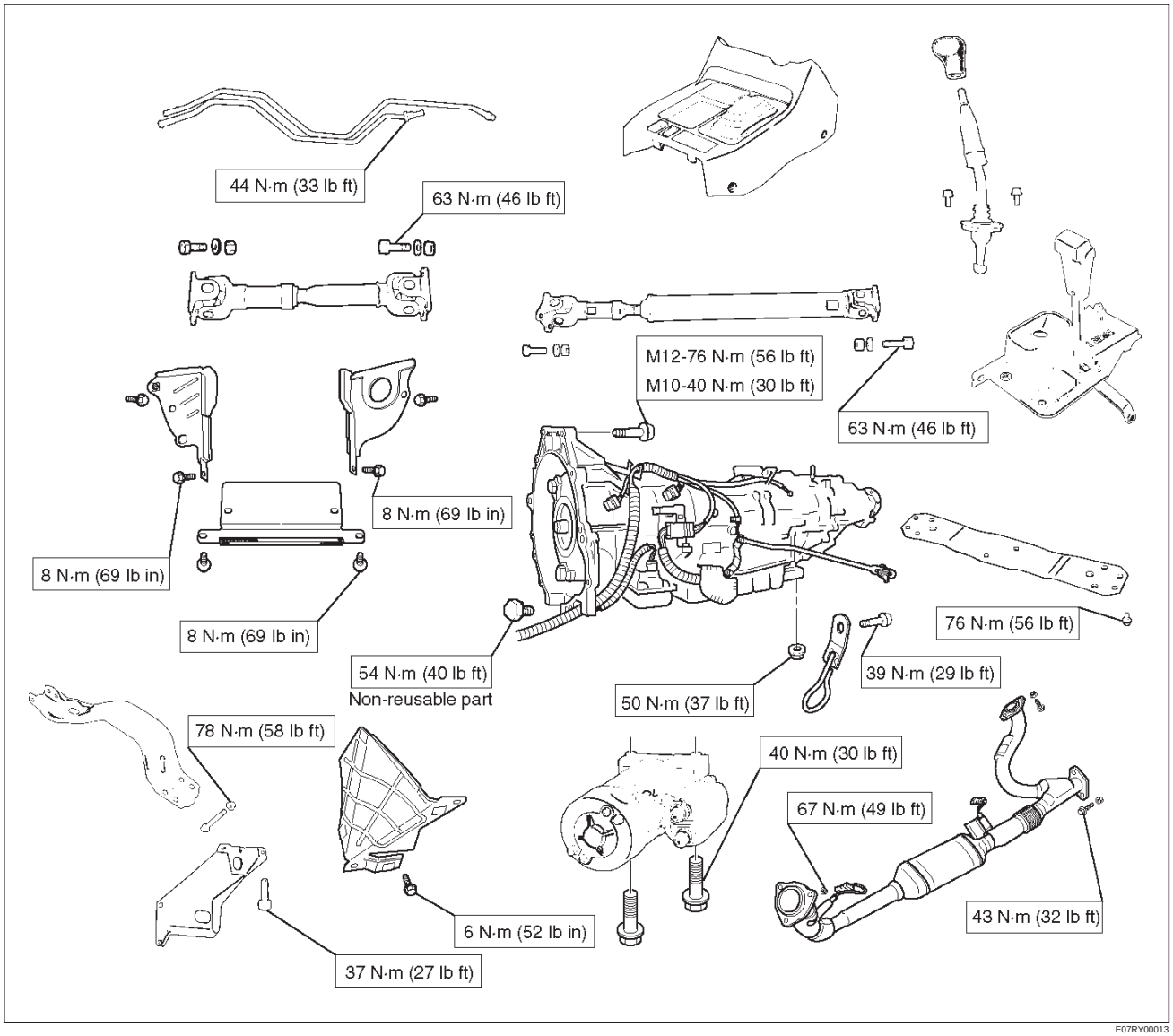

E07RY00013

Downloaded from www.Manualslib.com manuals search engine

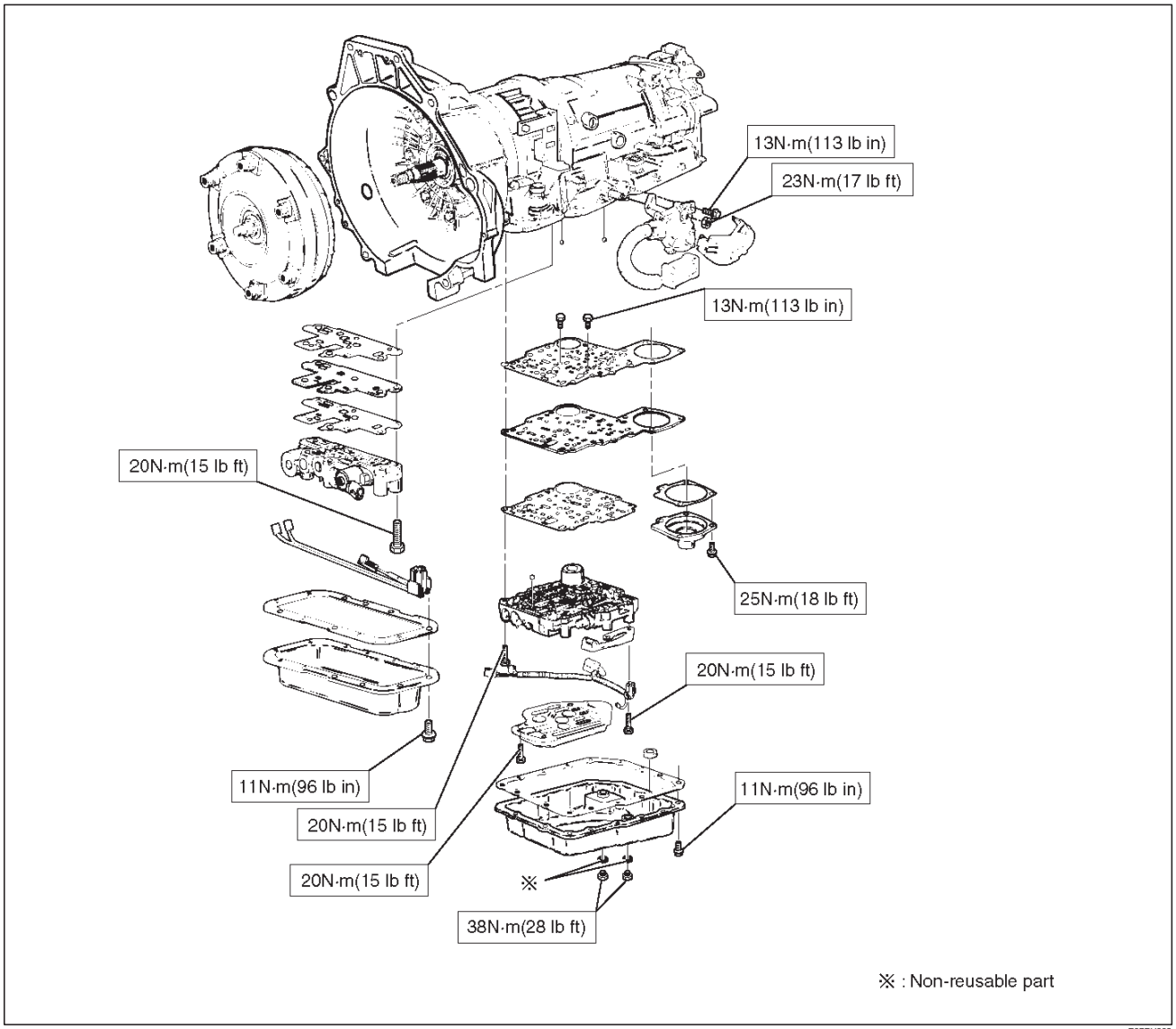

E07RY003

Downloaded from www.Manualslib.com manuals search engine

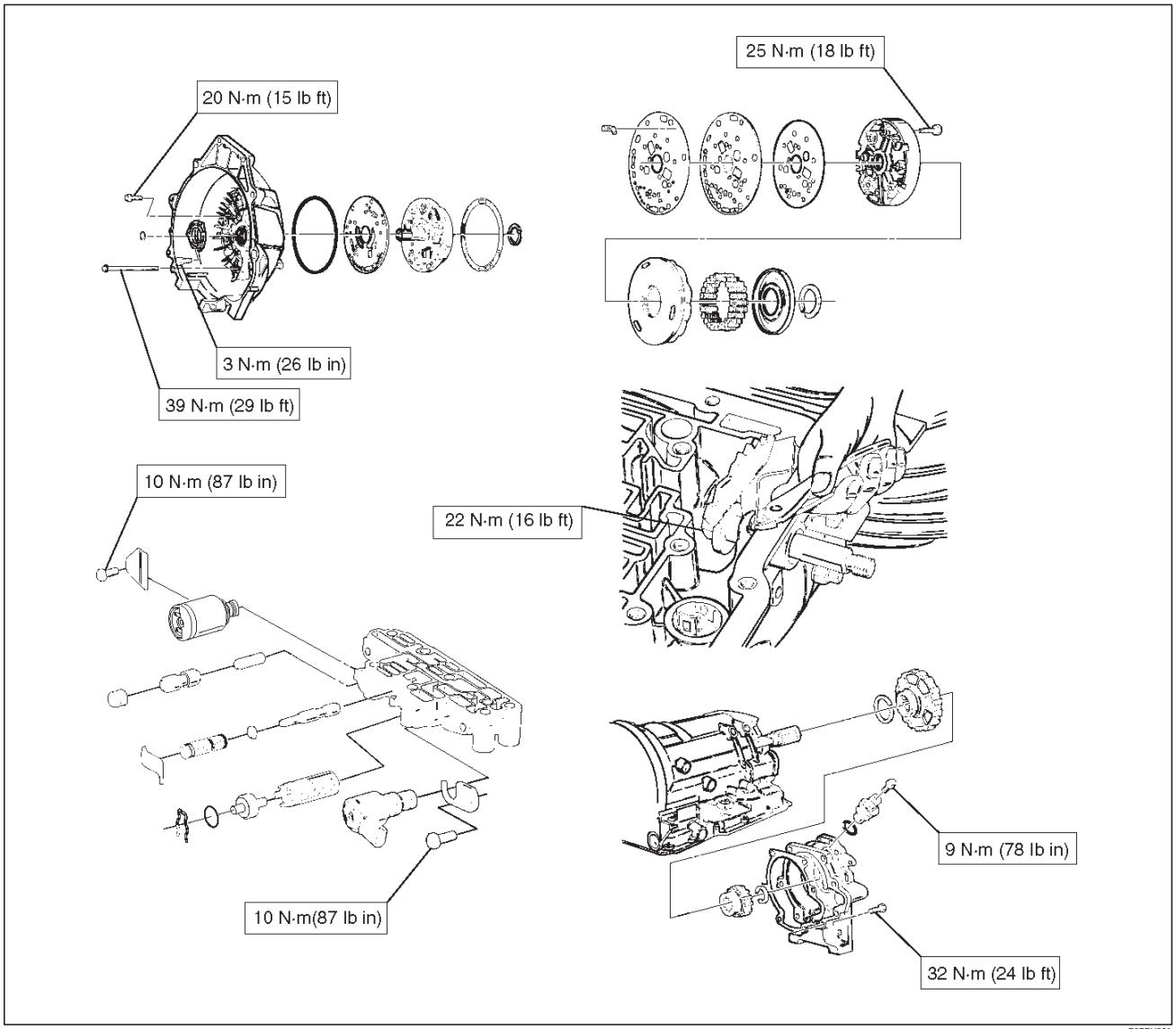

E07RY001

Downloaded from www.Manualslib.com manuals search engine

Special Tools

ILLUSTRATION	TOOL NO. TOOL NAME
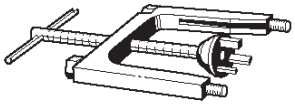 901RT071	**J–23075** Spring compressor (For servo piston)
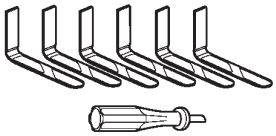 901RX007	**J–38450–A** Third clutch snap ring compressor
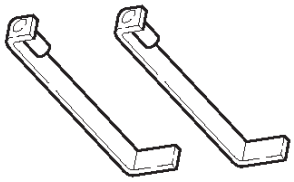 901RT073	**J–23075–12** Third clutch spring compressor adapter (Use with J–23075)
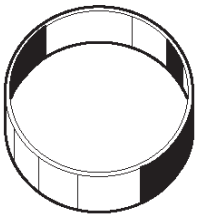 901RT074	**J–23084** Third clutch piston installer
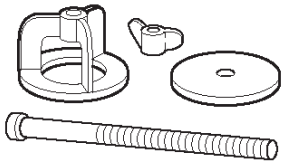 901RT075	**J–23327** Third clutch spring compressor
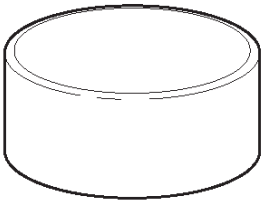 901RT076	**J–23080–A** Second clutch piston installer

ILLUSTRATION	TOOL NO. TOOL NAME
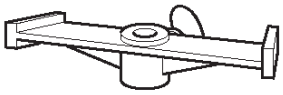 901RT077	**J–23085–A** Selective washer gauging tool
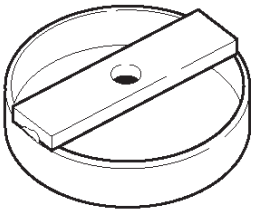 901RT078	**J–23327–90** Fourth clutch spring compressor (Use with J–23327)
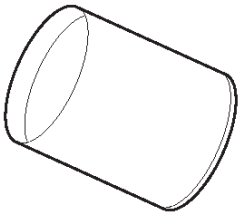 901RT079	**J–38553** 3/4 Accumulator piston fitter
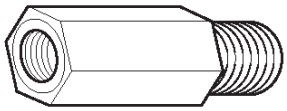 901RT080	**J–41096** Cover remover (Use with J–38584)
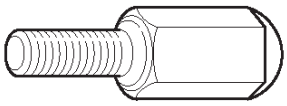 901RT081	**J–38584** Slide hammer adapter (Use with J–23907)
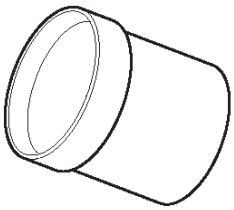 901RT082	**J–38554** Fourth clutch piston fitter

Downloaded from www.Manualslib.com manuals search engine

ILLUSTRATION	TOOL NO. TOOL NAME
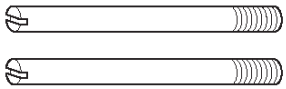 901RT083	**J–38588** Guide pins; adapter case to main case
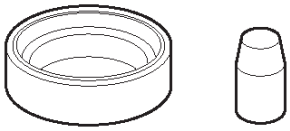 901RT084	**J–38555** Overrun clutch piston seal installer set
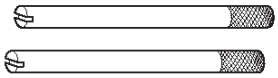 901RT085	**J–3387–2** Guide pins; gasket and transfer plate to valve body
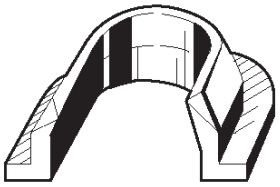 901RT086	**J–25022** Turbine shaft puller (Use with J–24773–1)
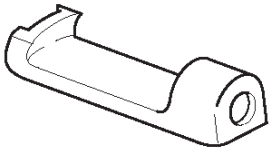 901RT087	**J–23129** Oil seal remover (Use with J–23907 and J–38584)
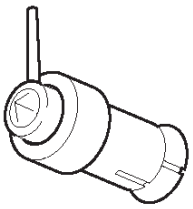 901RT088	**J–38557** Oil pump centering tool

ILLUSTRATION	TOOL NO. TOOL NAME
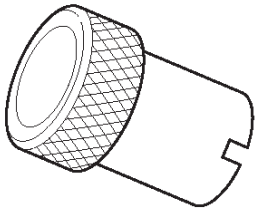 901RT089	**J–23082–01** Oil pump rotation tool
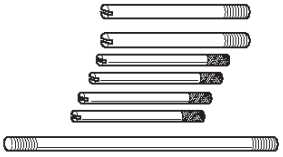 901RT090	**J–25025–B** Guide pins; valve body to main case
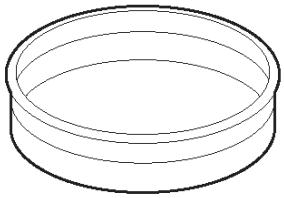 901RT091	**J–38428** Servo piston fitter
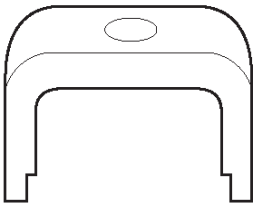 901RT092	**J–23327–91** Overrun clutch spring compressor
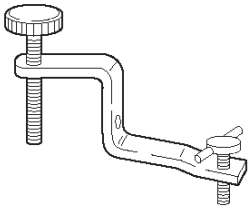 901RT093	**J–38559–A** 3/4 Accumulator piston cover compressor
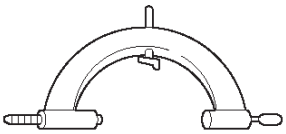 901RT094	**J–8763–02** Holding fixture

Downloaded from www.Manualslib.com manuals search engine

ILLUSTRATION	**TOOL NO.** TOOL NAME
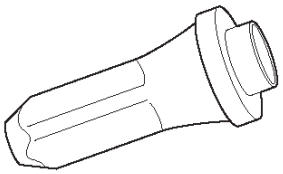 901RT095	**J–36797** A/T extension housing oil seal installer (Inside)
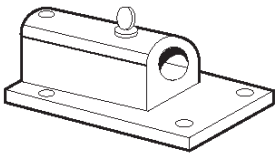 901RT096	**J–3289–20** Holding fixture base
901RT097	**J–29770–A** Pressure gauge
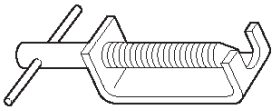 901RT098	**J–24773–1** End play fixture (Use with J–25022)
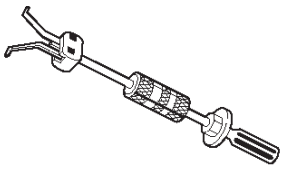 901RT099	**J–23907** Slide hammer

Downloaded from www.Manualslib.com manuals search engine

4L30–E Parts List

Case And Associated Parts

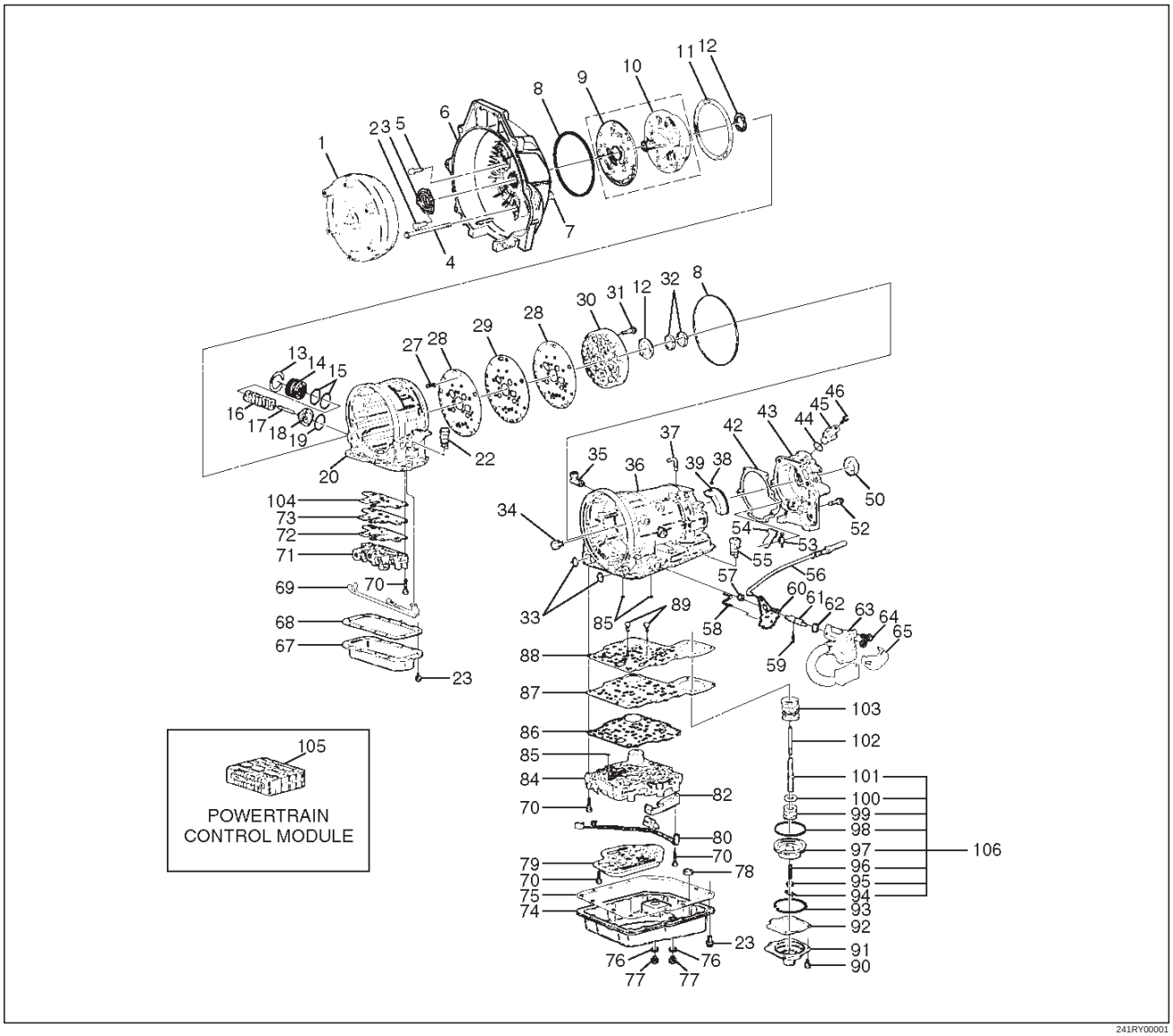

Legend

(1) Torque Converter
(2) Screw, Seal Ring Assembly
(3) Seal Ring Assembly, Converter Housing
(4) Screw, Converter Housing/Main Case
(5) Screw, Converter Housing/Oil Pump
(6) Housing, Converter
(7) Plug, Converter Housing
(8) Seal, O–Ring
(9) Wear Plate, Oil Pump Body
(10) Pump Assembly, Oil
(11) Gasket
(12) Washer, Thrust Selective
(13) Ring, Snap
(14) Cover, 3–4 Accumulator Piston
(15) Seal, O–Ring, 3–4 Accumulator
(16) Spring, 3–4 Accumulator Piston
(17) Pin, 3–4 Accumulator Piston
(18) Piston, 3–4 Accumulator
(19) Ring, 3–4, Accumulator Piston
(20) Case, Adapter
(22) Connector, Electrical/Adapter Case
(23) Screw, Pan
(27) Restrictor, Oil
(28) Gasket, Transfer Plate/Adapter
(29) Plate, Transfer Adapter/Center Support
(30) Support Assembly, Center
(31) Screw, Center Support
(32) Ring, Oil Seal
(33) Seal, O–Ring Main Case
(34) Fitting, Cooler
(35) Fitting Assembly, Cooler
(36) Case, Main
(37) Breather, Pipe

Downloaded from www.Manualslib.com manuals search engine

(38) Seal, O–Ring
(39) Reservoir
(42) Gasket, Extension Case
(43) Extension Assembly
(44) Seal, O–Ring/Speed Sensor
(45) Sensor Assembly, Speed
(46) Screw, Speed Sensor
(50) Seal, Extension Assembly
(52) Screw, Extension/Main Case
(53) Spring, Parking Pawl Lock
(54) Pawl, Parking Lock
(55) Connector, Electrical/Main Case
(56) Actuator Assembly, Parking Lock
(57) Nut, Parking Lock Lever
(58) Link, Manual Valve
(59) Pin, Spring
(60) Lever, Parking Lock and Range Selector
(61) Shaft, Selector
(62) Seal, Selector Shaft
(63) Mode Switch Assembly
(64) Screw and Conical Washer Assembly
(65) Shield, Mode Switch
(67) Pan, Bottom/Adapter Case
(68) Gasket, Bottom Pan/Adapter Case
(69) Harness Assembly, Adapter Case
(70) Screw, Valve Body
(71) Valve Body Assembly, Adapter Case
(72) Gasket, Adapter Valve Body
(73) Plate, Adapter Valve Body/Transfer
(74) Pan, Bottom/Main Case
(75) Gasket, Bottom Pan/Main Case
(76) Gasket, Oil Drain or Overfill Screw
(77) Screw, Oil Drain or Overfill
(78) Magnet, Chip Collector
(79) Filter Oil
(80) Harness Assembly, Main Case
(82) Roller and Spring Assembly, Manual Detent
(84) Valve Body Assembly, Main Case
(85) Ball, Check
(86) Gasket, Main V.B./Transfer Plate
(87) Plate, Main V.B./Transfer
(88) Gasket, Transfer/Main Case
(89) Screw, Transfer Plate on V.B.
(90) Screw, Servo Cover
(91) Cover, Servo Piston
(92) Gasket, Cover/Servo Piston
(93) Ring, Retaining Servo Piston
(94) Clip, Servo Piston
(95) Nut, Servo Screw
(96) Screw, Servo Piston
(97) Piston, Servo
(98) Seal, Ring/Servo Piston
(99) Spring, Cushion/Servo Piston
(100) Seat, Cushion Spring
(101) Sleeve, Servo Piston Adjust
(102) Rod, Apply/Servo Piston
(103) Spring, Return/Servo Piston
(104) Gasket, Adapter Case/Transfer Plate
(105) Powertrain Control Module
(106) Servo Piston Assembly

Downloaded from www.Manualslib.com manuals search engine

Pump Assembly

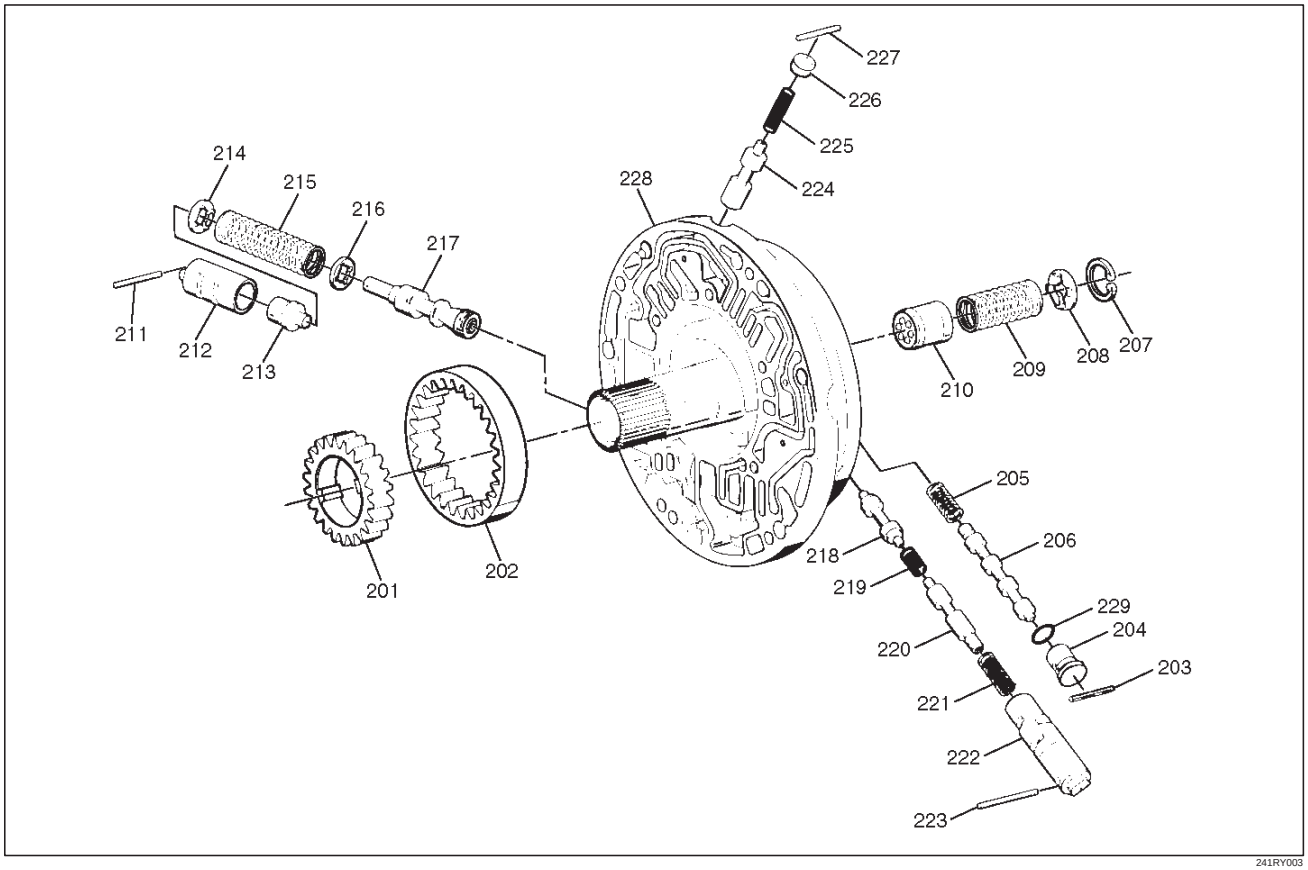

Legend

(201) Gear, Oil Pump Drive
(202) Gear, Oil Pump Driven
(203) Pin, Plug Converter Clutch Control
(204) Plug, Converter Clutch Control Valve
(205) Spring, Converter Clutch Control Valve
(206) Valve, Converter Clutch Control
(207) Ring, Snap/Throttle Signal Accumulator
(208) Seat, Spring/Throttle Signal Accumulator
(209) Spring, Throttle Signal Accumulator
(210) Piston, Throttle Signal Accumulator
(211) Pin, Boost Valve Sleeve
(212) Sleeve, Boost Valve
(213) Valve, Boost
(214) Seat, Spring/Pressure Regulator Valve
(215) Spring, Pressure Regulator Valve
(216) Seat, Spring/Pressure Regulator Valve
(217) Valve, Pressure Regulator
(218) Isolator Valve
(219) Spring, Isolator
(220) Valve, Converter Clutch Regulator
(221) Spring, Converter Clutch Regulator
(222) Sleeve, Converter Clutch Regulator
(223) Pin, Retainer Sleeve
(224) Valve, Enable
(225) Spring, Enable Valve
(226) Spring Guide, Enable Valve
(227) Pin, Enable Valve
(228) Pump Assembly
(229) Seal Ring, Plug

Downloaded from www.Manualslib.com manuals search engine

Valve Body Assemblies

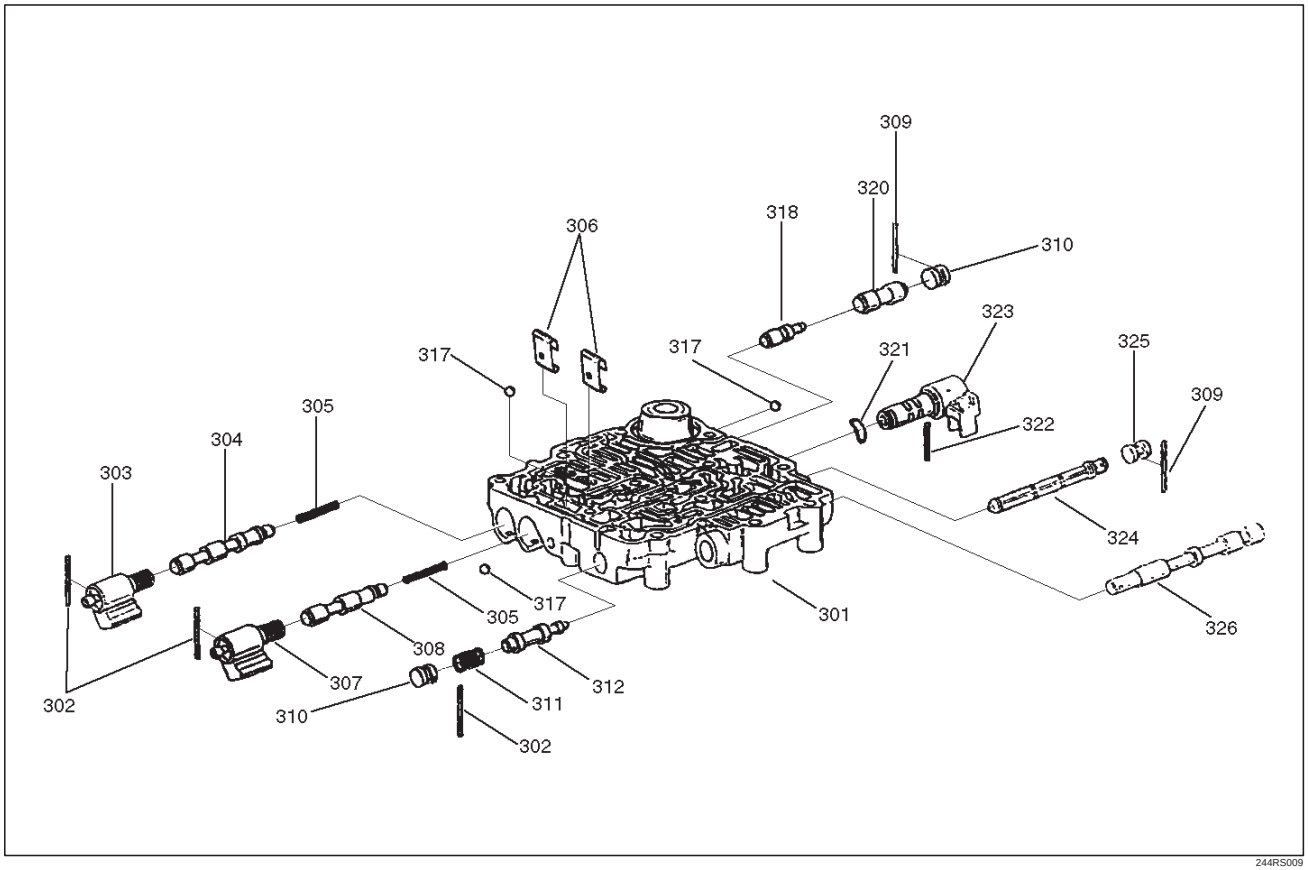

Legend

(301) Body, Valve Main Case
(302) Pin, Spring
(303) Solenoid Assembly, ON/OFF N.C.
(304) Valve, 1–2 and 3–4 Shift
(305) Spring, 1–2 and 3–4 (2–3) Shift
(306) Retainer, Valve
(307) Solenoid Assembly, ON/OFF N.O.
(308) Valve, 2–3 Shift
(309) Pin, Spring
(310) Plug, Valve Bore
(311) Spring, Valve Low Pressure Control
(312) Valve, Low Pressure Control
(317) Ball, Check
(318) Valve, 1–2 Accumulator Control
(320) Valve, 1–2 Accumulator
(321) Washer, Waved PWM Solenoid
(322) Pin, Solenoid PWM
(323) Solenoid Assembly, Band Control PWM
(324) Screen Assembly, PWM Solenoid
(325) Plug, Screen
(326) Valve, Manual

Downloaded from www.Manualslib.com manuals search engine

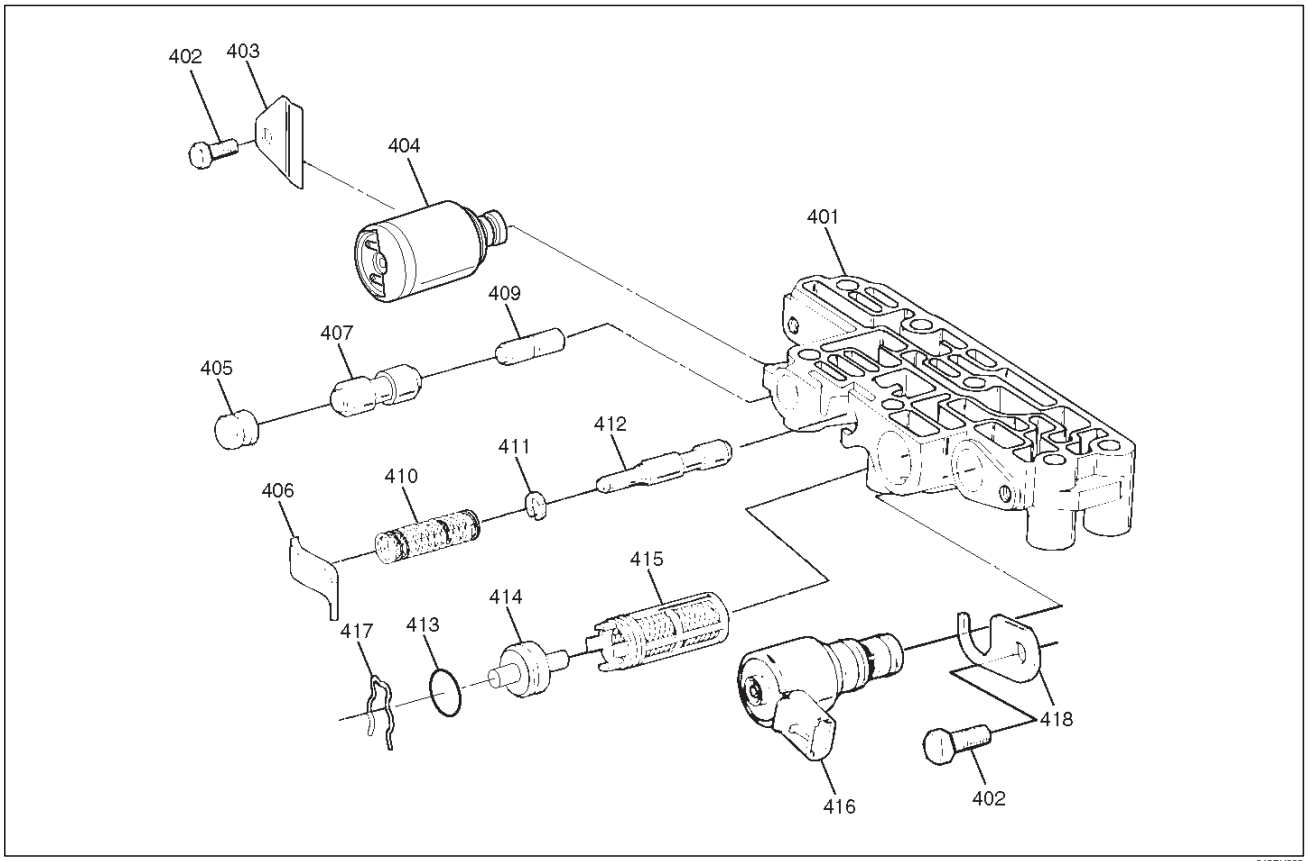

Legend

(401) Body, Valve/Adapter Case
(402) Screw, Solenoid Force Motor
(403) Retainer, Force Motor
(404) Solenoid, Force Motor
(405) Plug, 3–4 Accumulator
(406) Plug and Spring Retainer
(407) Valve, 3–4 Accumulator
(409) Valve, 3–4 Accumulator Control
(410) Spring, Feed Limit Valve
(411) Ring, Retainer
(412) Valve, Feed Limit
(413) Seal, O–Ring Plug Filter
(414) Plug, Screen
(415) Screen Assembly, Force Motor
(416) Solenoid, Torque Converter Clutch, PWM
(417) Retainer, Screen Plug
(418) Bracket, PWM Solenoid

Downloaded from www.Manualslib.com manuals search engine

Overdrive Internal Components

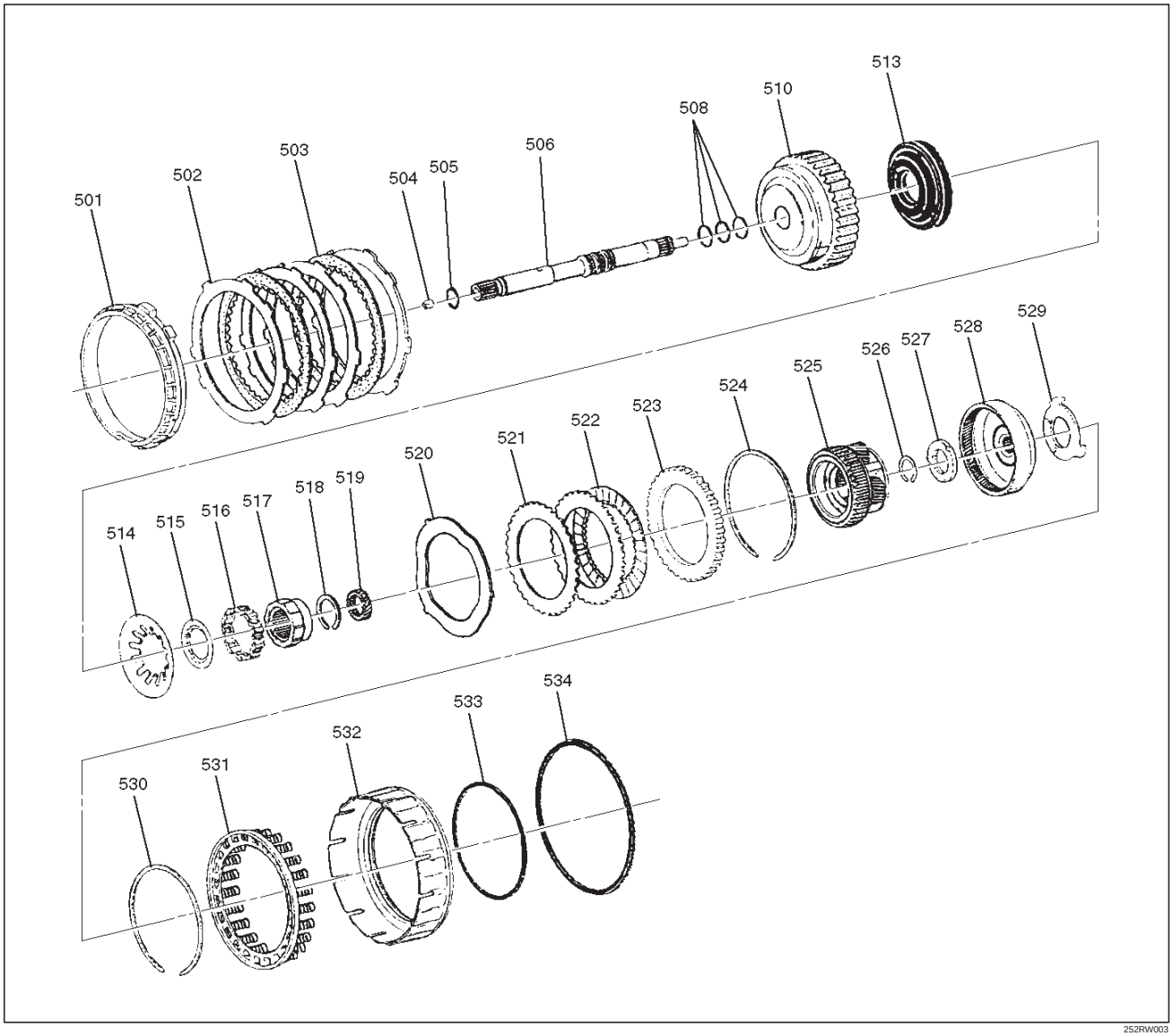

Legend

(501) Retainer, 4th Clutch
(502) Plate, 4th Clutch (Steel)
(503) Plate Assembly, 4th Clutch (Lined)
(504) Retainer And Ball Assembly, Check Valve
(505) Seal, O–Ring/Turbine Shaft
(506) Shaft, Turbine
(508) Ring, Oil Seal/Turbine Shaft
(510) Housing, Overrun Clutch
(513) Piston, Overrun Clutch
(514) Spring, Overrun Clutch Release
(515) Retainer, Release Spring/Overrun Clutch
(516) Roller Assembly, Overdrive Clutch
(517) Cam, Overdrive Roller Clutch
(518) Ring, Snap/Overrun Clutch Hub
(519) Gear, Overdrive Sun
(520) Plate, Waved/Overrun Clutch
(521) Plate, Overrun Clutch (Steel)
(522) Plate Assembly, Overrun Clutch (Lined)
(523) Plate, Backing/Overrun Clutch
(524) Ring, Snap/Overrun Clutch Housing
(525) Carrier Assembly, Overdrive Complete
(526) Ring, Snap/Turbine Shaft/Carrier
(527) Bearing Assembly, Thrust
(528) Gear, Overdrive Internal
(529) Washer, Thrust/Internal Gear/Support
(530) Ring, Snap/Adapter/4th Clutch Spring
(531) Retainer and spring assembly, 4th clutch
(532) Piston, 4th Clutch
(533) Seal, 4th Clutch Piston (Inner)
(534) Seal, 4th Clutch Piston (outer)

Downloaded from www.Manualslib.com manuals search engine

Internal Components

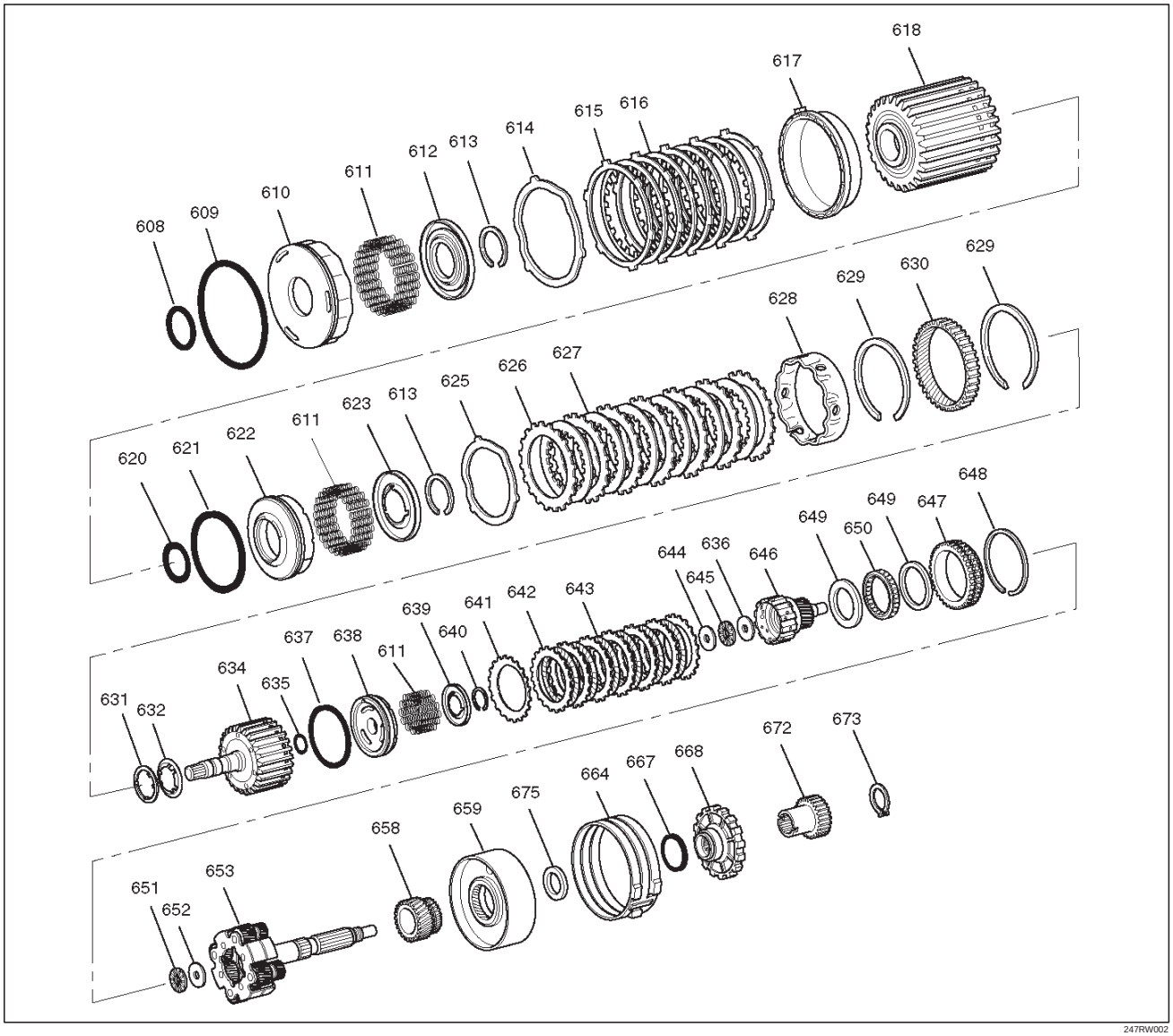

Legend

(608) Seal, Reverse Clutch Piston (Inner)
(609) Seal, Reverse Clutch Piston (Outer)
(610) Piston, Reverse Clutch
(611) Spring, Piston Clutch
(612) Seat, Spring/Reverse Clutch
(613) Ring, Retaining
(614) Plate, Waved/Reverse Clutch
(615) Plate, Reverse Clutch (Steel)
(616) Plate Assembly, Reverse Clutch (Lined)
(617) Plate, Reverse Clutch Pressure/Selective
(618) Drum Assembly, 2nd Clutch
(620) Seal, 2nd Clutch Piston (Inner)
(621) Seal, 2nd Clutch Piston (Outer)
(622) Piston, 2nd Clutch
(623) Seat, Spring/2nd Clutch
(625) Plate, Waved/2nd Clutch
(626) Plate, 2nd Clutch (Steel)
(627) Plate Assembly, 2nd Clutch (Lined)
(628) Spacer, 2nd Clutch
(629) Ring, Retaining
(630) Gear, Ring
(631) Washer, Thrust/2nd Clutch/3rd Clutch
(632) Thrust Washer, Clutch Hub
(634) Drum Assembly, 3rd Clutch
(635) Seal, 3rd clutch piston (Inner)
(636) Washer, Retaining
(637) Seal, 3rd Clutch Piston (Outer)
(638) Piston 3rd Clutch
(639) Seat, Spring/3rd Clutch
(640) Ring, Retaining
(641) Plate, Spring Cushion/3rd Clutch
(642) Plate, 3rd Clutch (Steel)
(643) Plate Assembly, 3rd Clutch (Lined)
(644) Washer, Thrust/Input Sun
(645) Bearing, Input Shaft/Gear Assembly

Downloaded from www.Manualslib.com manuals search engine

(646) Gear Assembly, Input Sun
(647) Race Assembly, Sprag
(648) Ring, Retaining/Sprag
(649) Ring, Retaining
(650) Cage Assembly, Sprag
(651) Bearing, Output Shaft/Input Sun
(652) Washer, Output Shaft/Input Sun
(653) Carrier Assembly, Planetary
(658) Gear, Reaction Sun
(659) Drum, Reaction Sun
(664) Band Assembly, Brake
(667) Seal, Ring/Wheel Parking Lock
(668) Wheel, Parking Lock
(672) Wheel, Speed
(673) Ring, Retaining
(675) Bearing, Thrust Assembly

Center Support Assembly

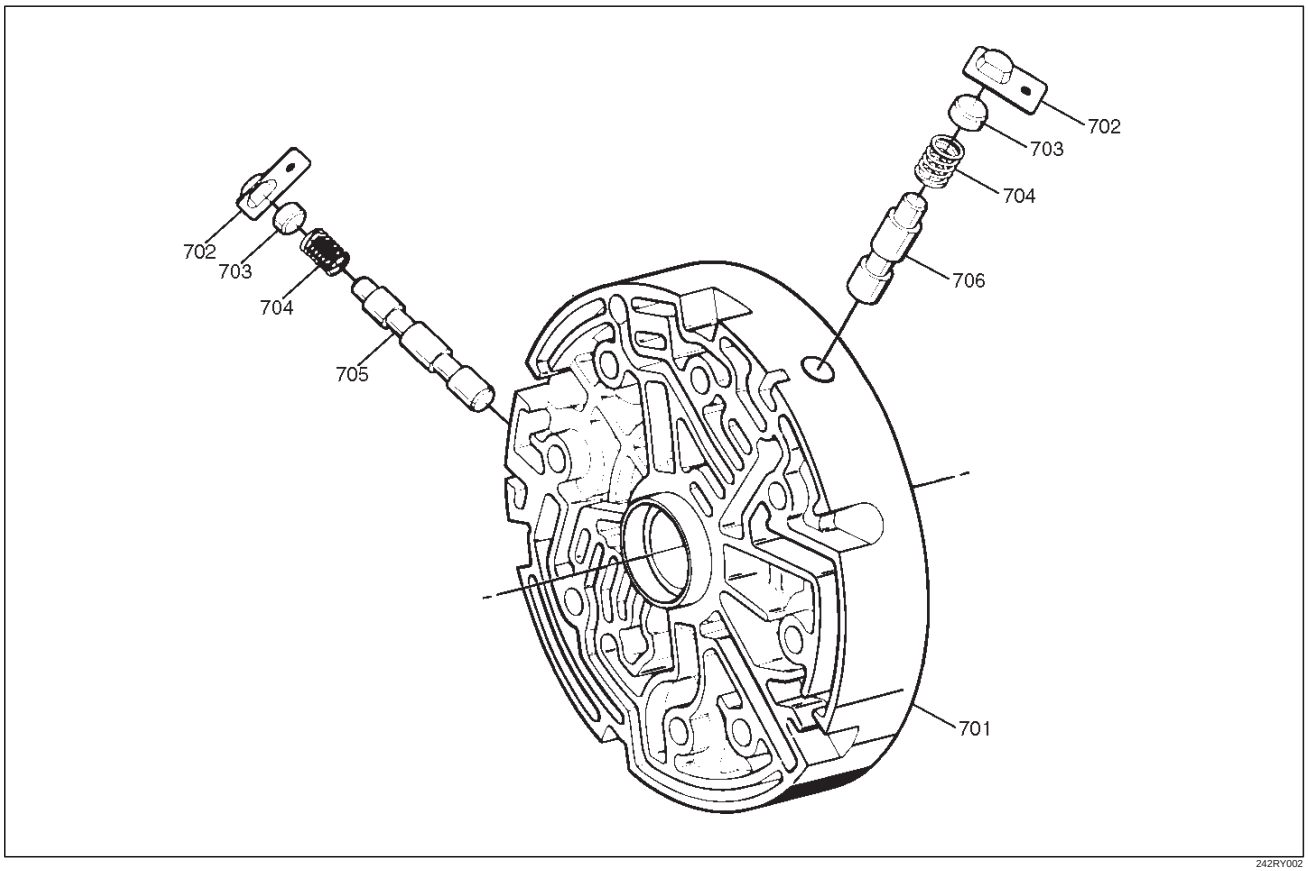

242RY002

Legend

(701) Center Support
(702) Retainer Plate
(703) Plug, Lockout
(704) Spring, Lockout
(705) Valve, Overrun Lockout
(706) Valve, Reverse Lockout Control

Downloaded from www.Manualslib.com manuals search engine

Extension Housing Assembly Oil Seal

Extension Housing Assembly Rear Oil Seal and Associated Parts

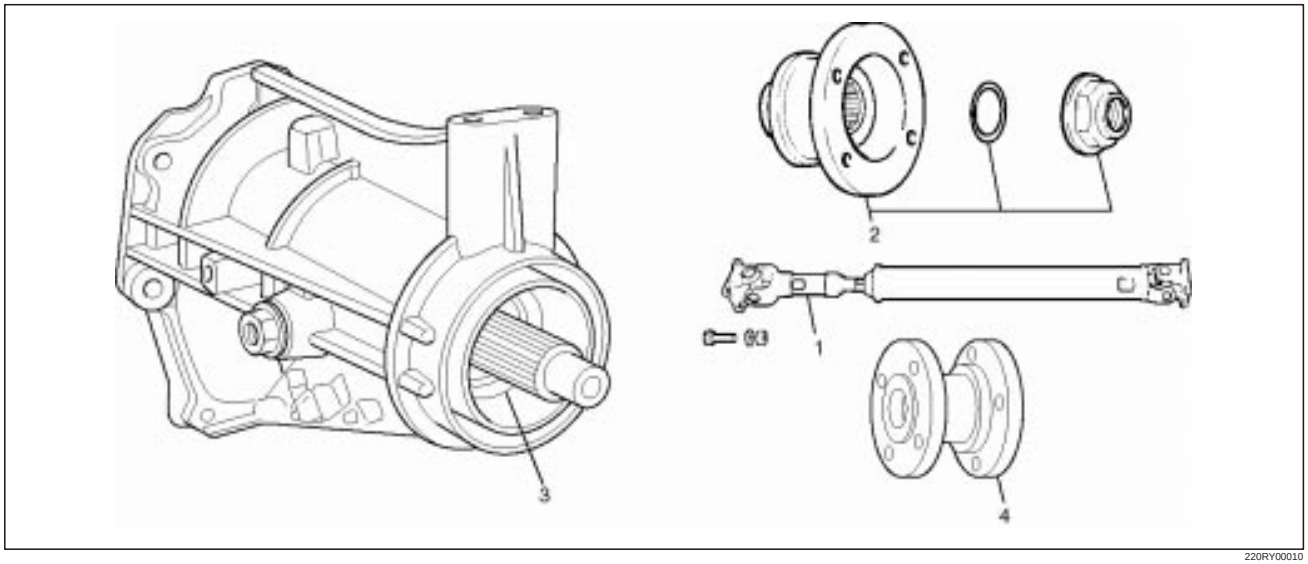

220RY00010

Legend

(1) Propeller Shaft
(2) End Nut and Companion Flange
(3) Oil Seal
(4) Mass

Removal

1. Disconnect the propeller shaft (1) and mass (4) from the extension housing assembly.
2. Remove end nut and companion flange (2), using the companion flange holder J–8614–11.

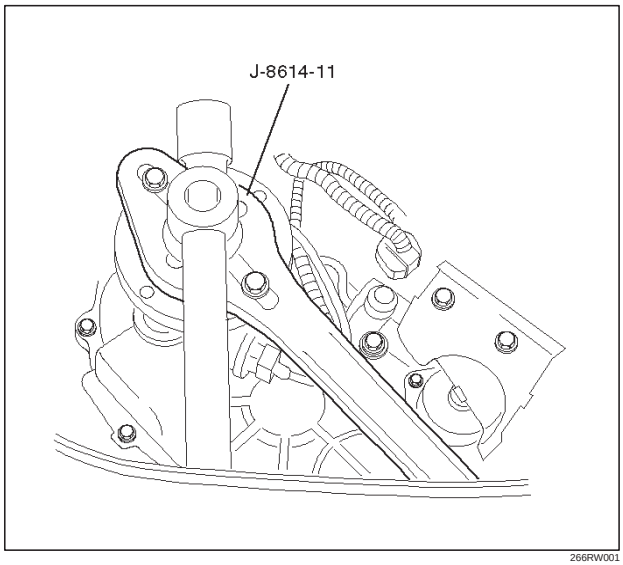

266RW001

3. Use the universal puller to remove the companion flange and O–ring.
4. Remove the oil seal from the extension housing assembly.

Installation

1. Install oil seal and apply engine oil to the oil seal outer surfaces.
2. Apply the recommended grease (BESCO L2) or equivalent to the oil seal lip.
3. Use the oil seal installer J–39208 to install the rear seal (3) to the extension housing assembly.

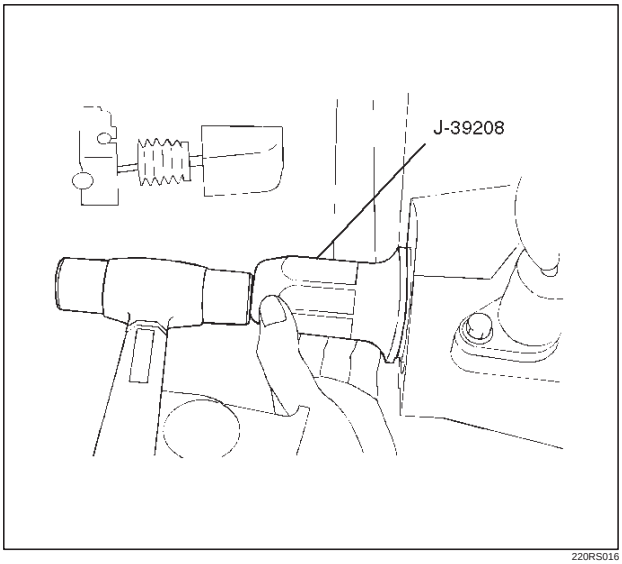

220RS016

Downloaded from www.Manualslib.com manuals search engine

4. Install the companion flange (2) and O–ring (2).
5. Use the companion flange holder J–8614–11 to install a new end nut (2) and tighten to the specified torque.

   Torque: 167 N·m (123 lb ft)
6. Use the punch J–39209 to stake the end nut at two spots.

NOTE: Be sure to confirm that there is no crack at the staked portion of the end nut (2) after staking.

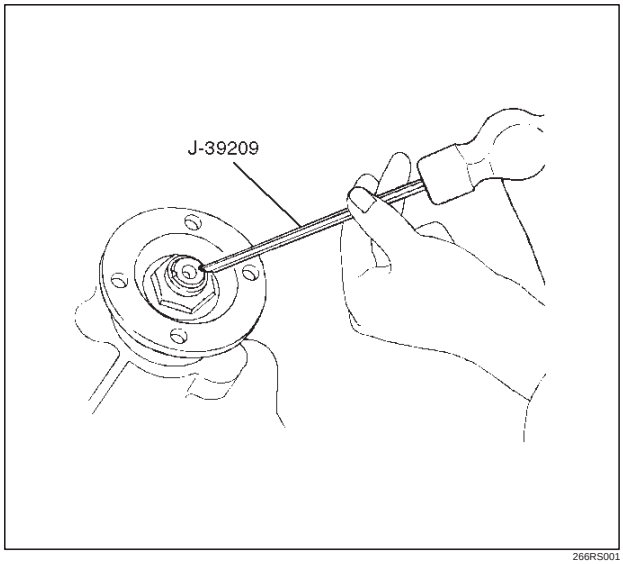

266RS001

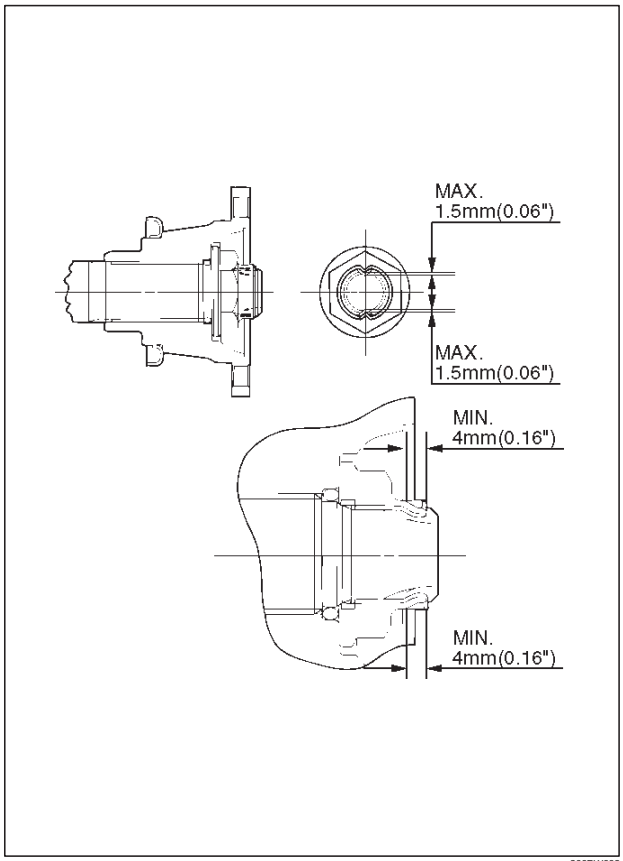

266RW002

7. Connect the mass and propeller shaft to the extension housing assembly and tighten to the specified torque.

   Torque: 63 N·m 46 (lb ft)

Downloaded from www.Manualslib.com manuals search engine

Extension Housing Assembly

Extension Housing Assembly and Associated Parts

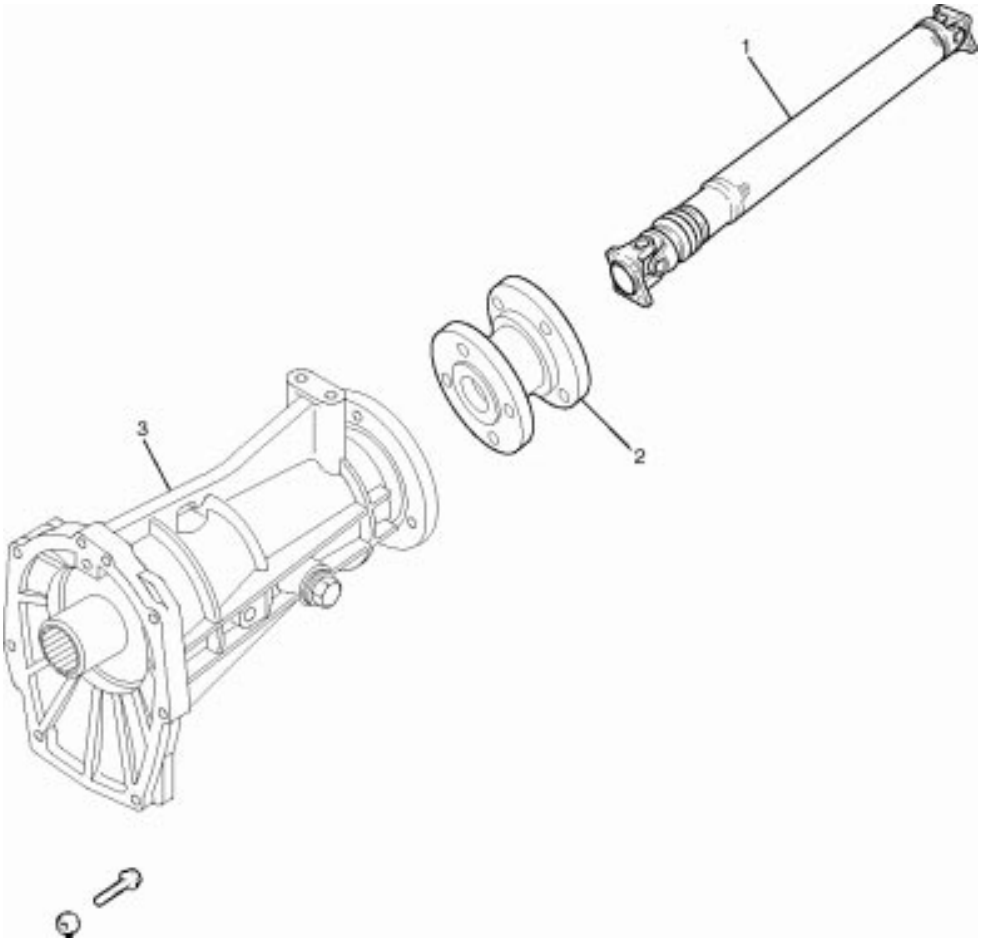

260RY00006

Legend

(1) Propeller Shaft
(2) Mass
(3) Extension Housing Assembly

Downloaded from www.Manualslib.com manuals search engine

Removal

1. Disconnect battery ground cable.
2. Raise and support vehicle with suitable stands.
3. Disconnect harness connectors and fuel pipe fix bolt.
   Connector: speed sensor.
4. Removing the speedometer driven gear bushing and driven gear, drain extension housing assembly fluid.
5. Remove propeller shaft (1) and mass (2).

NOTE: Apply alignment marks on the flange at both front and rear sides.

6. Remove extension housing assembly (3) from the vehicle.

Installation

1. Apply a thin coat of molybdenum disulfide grease to the extension shaft spline as shown in the figure.

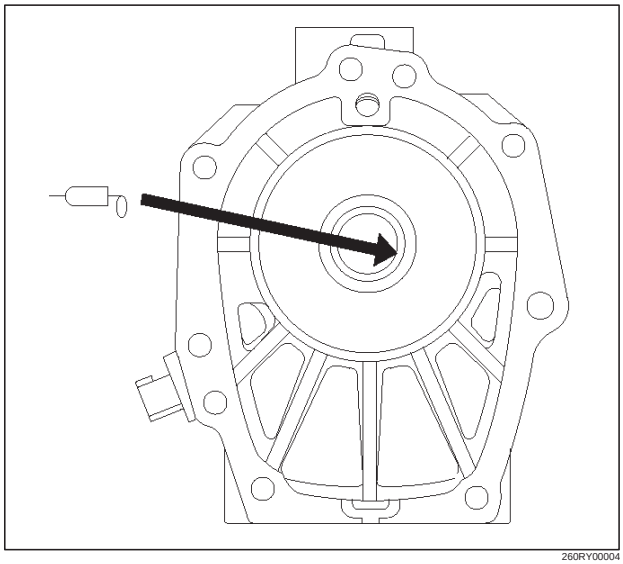

260RY00004

Downloaded from www.Manualslib.com manuals search engine

2. Install extension housing assembly (3) to the transmission. Tighten extension housing assembly bolts as shown in the figure.

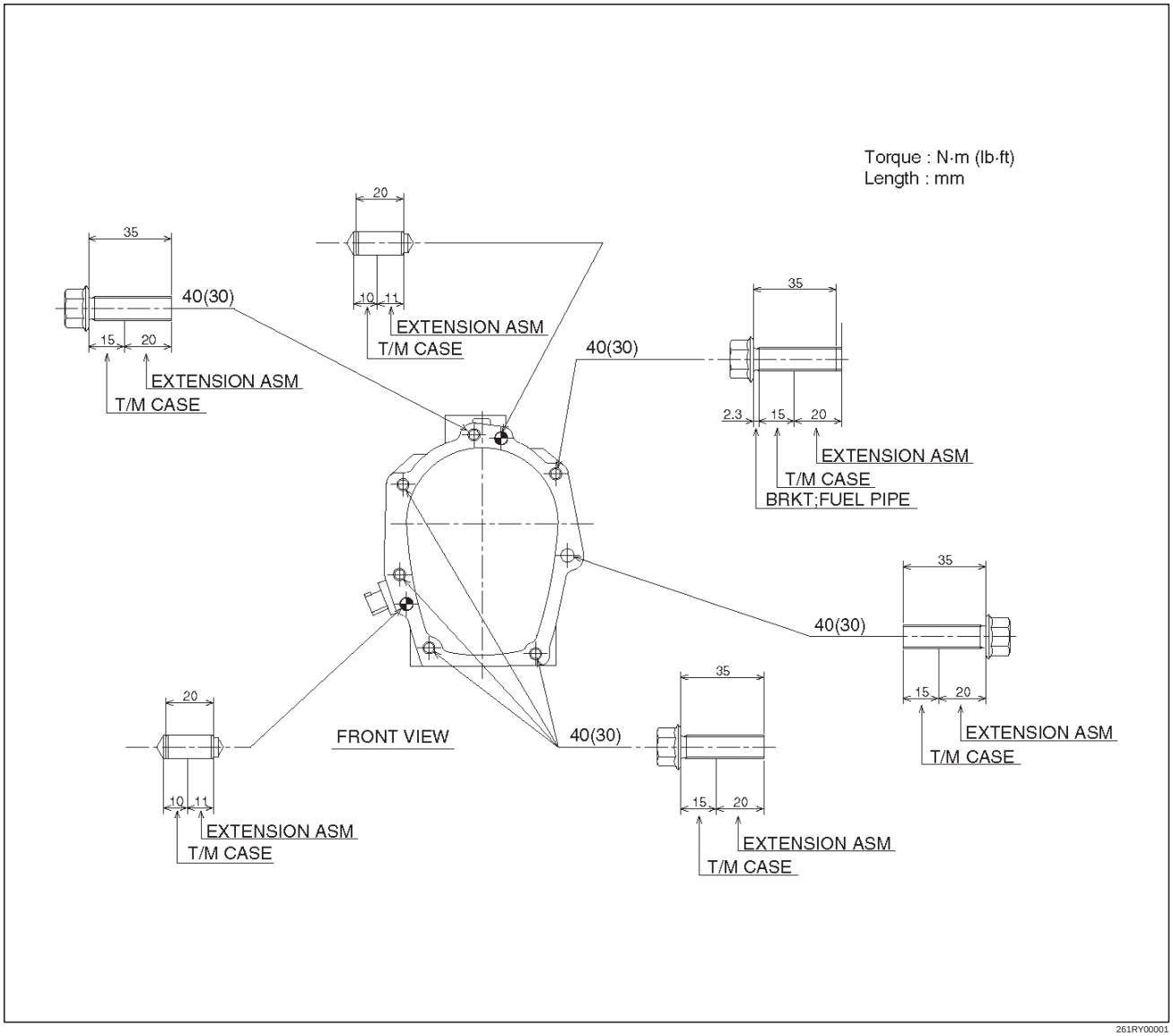

261RY00001

3. Install speedometer driven gear bushing and driver gear.
4. Connect harness connectors and fuel pipe fix bolt.
   Connector: speed sensor.
5. Install propeller shaft (1) and mass (2).

   Torque: 63 N·m (46 lb ft)
6. Fill extension housing assembly fluid.
7. Connect battery ground cable.

Downloaded from www.Manualslib.com manuals search engine

Extension Housing Assembly

Extension Housing Assembly and Associated Parts

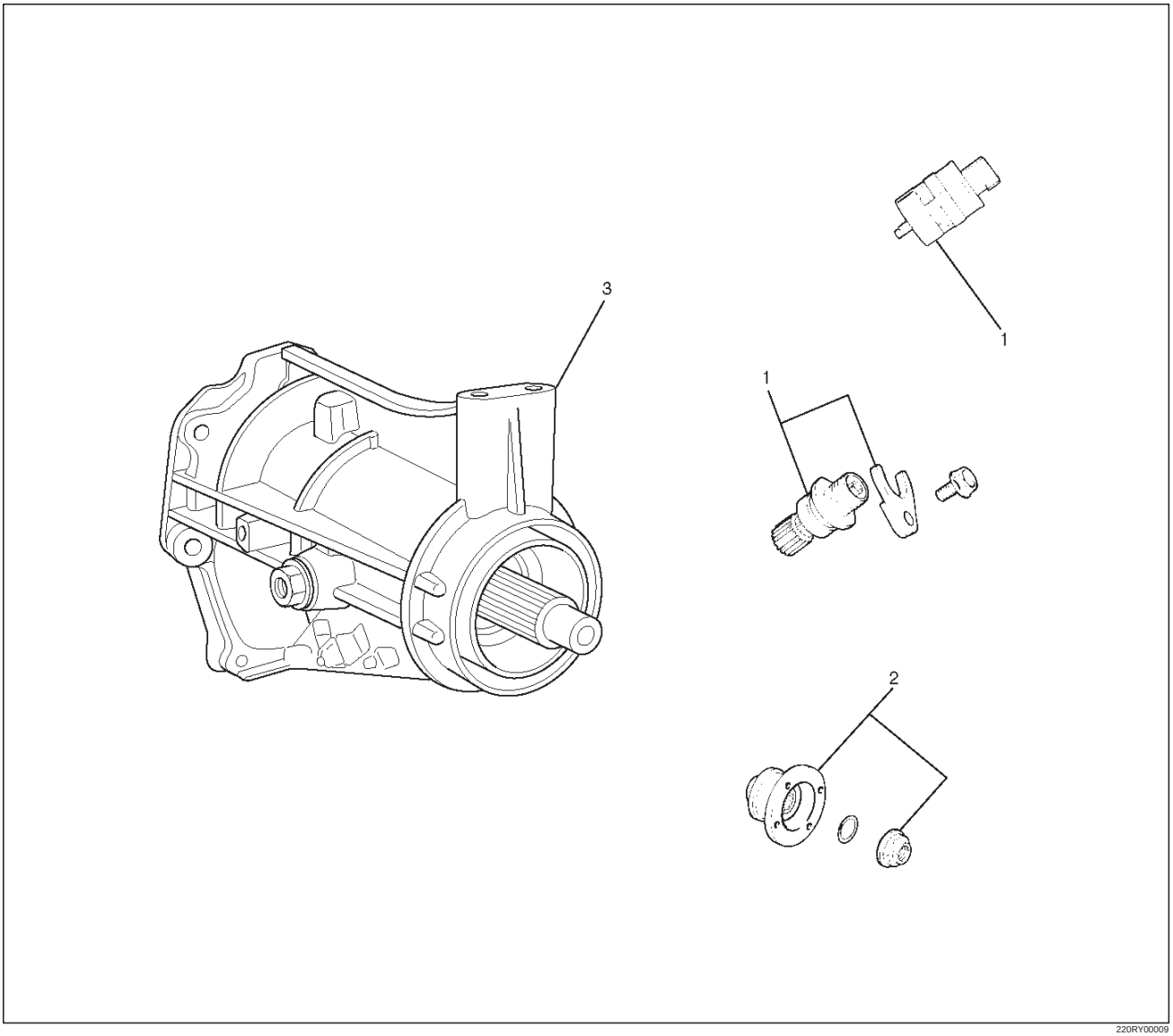

Legend

(1) Speedometer Sensor, Speedometer Driven Gear and Plate
(2) Companion Flange
(3) Extension Housing Assembly

Downloaded from www.Manualslib.com manuals search engine

Removal

1. Remove the speedometer sensor (1).
2. Remove the plate (1).
3. Remove the speedometer driven gear bushing and driven gear (1).

NOTE: Apply a reference mark to the driven gear bushing before removal.

4. Remove rear companion flange (2), using the flange companion holder J–8614–11 to remove the end nut.

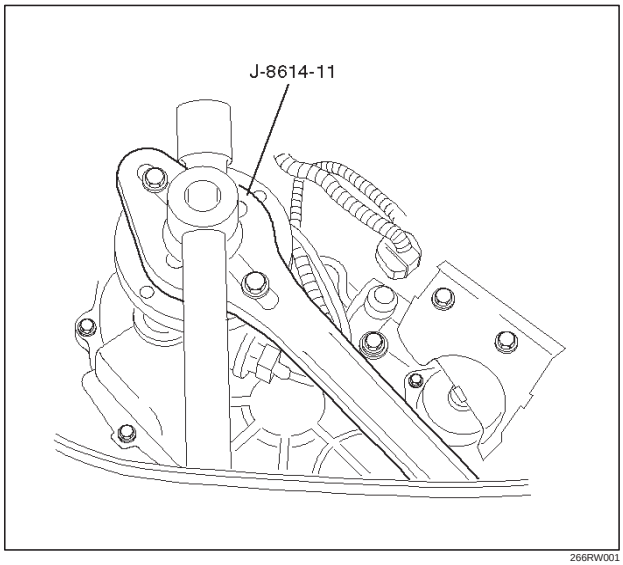

266RW001

5. Remove the rear companion flange.

NOTE: Use the universal puller to remove the rear companion flange.

Installation

1. Install companion flange (2), using the companion flange holder J–8614–11 to tighten the flange nuts to the transfer case.

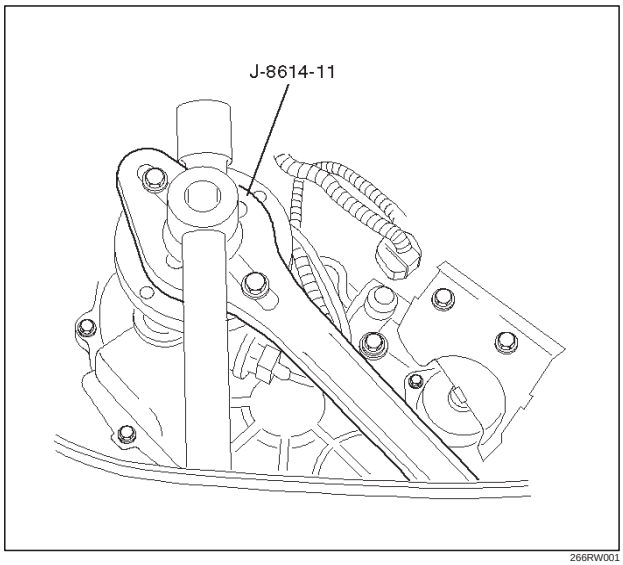

266RW001

2. Tighten the new transfer flange nuts to the specified torque.

Torque

Companion flange: 167 N·m (123 lb ft)

3. Use the punch J–39209 to stake the companion flange nut (3) at two spots.

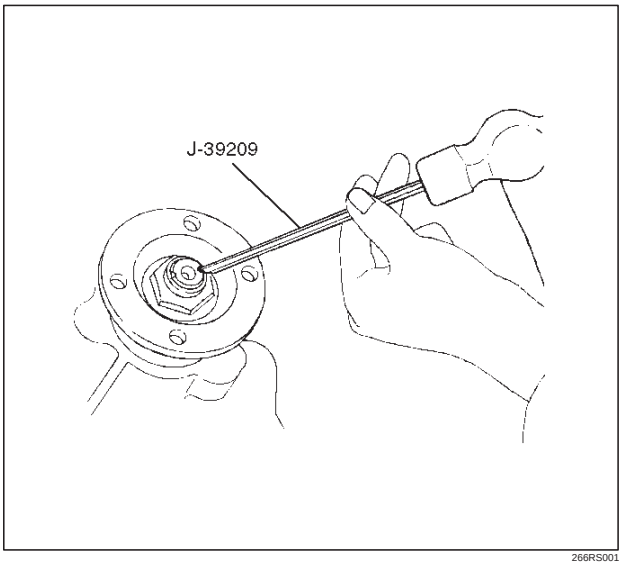

266RS001

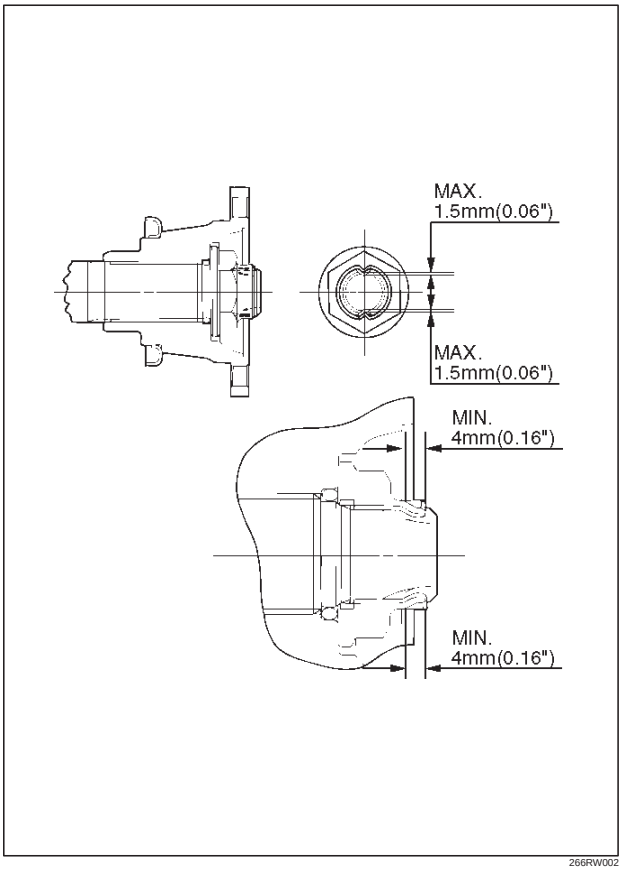

266RW002

Downloaded from www.Manualslib.com manuals search engine

NOTE: Be sure to confirm that there is no crack at the staked portion of the flange nut after staking.

4. Install the O–ring (7) to the speedometer driven gear bushing (6).
5. Install the driven gear to the speedometer driven gear bushing (6).
6. Install the speedometer driven gear assembly to the extension housing assembly.
7. Install the plate (5) to the extension housing assembly and tighten to the specified torque.

   Torque: 15 N·m (11 lb ft)

8. Install the speedometer sensor and tighten to the specified torque.

   Torque: 27 N·m (20 lb ft)

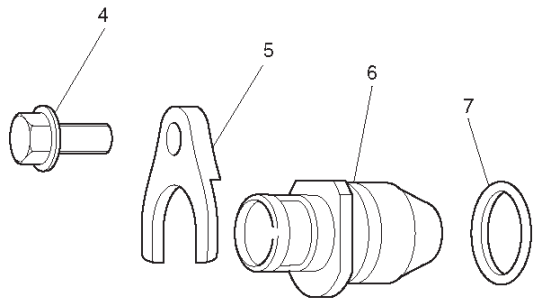

Type		Drive gear teeth × Driven gear teeth
A	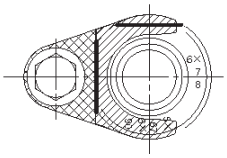	6 × 18

225RY00003

Legend

(4) Bolt
(5) Plate
(6) Bushing
(7) O–ring

Downloaded from www.Manualslib.com manuals search engine

Extension Housing Assembly

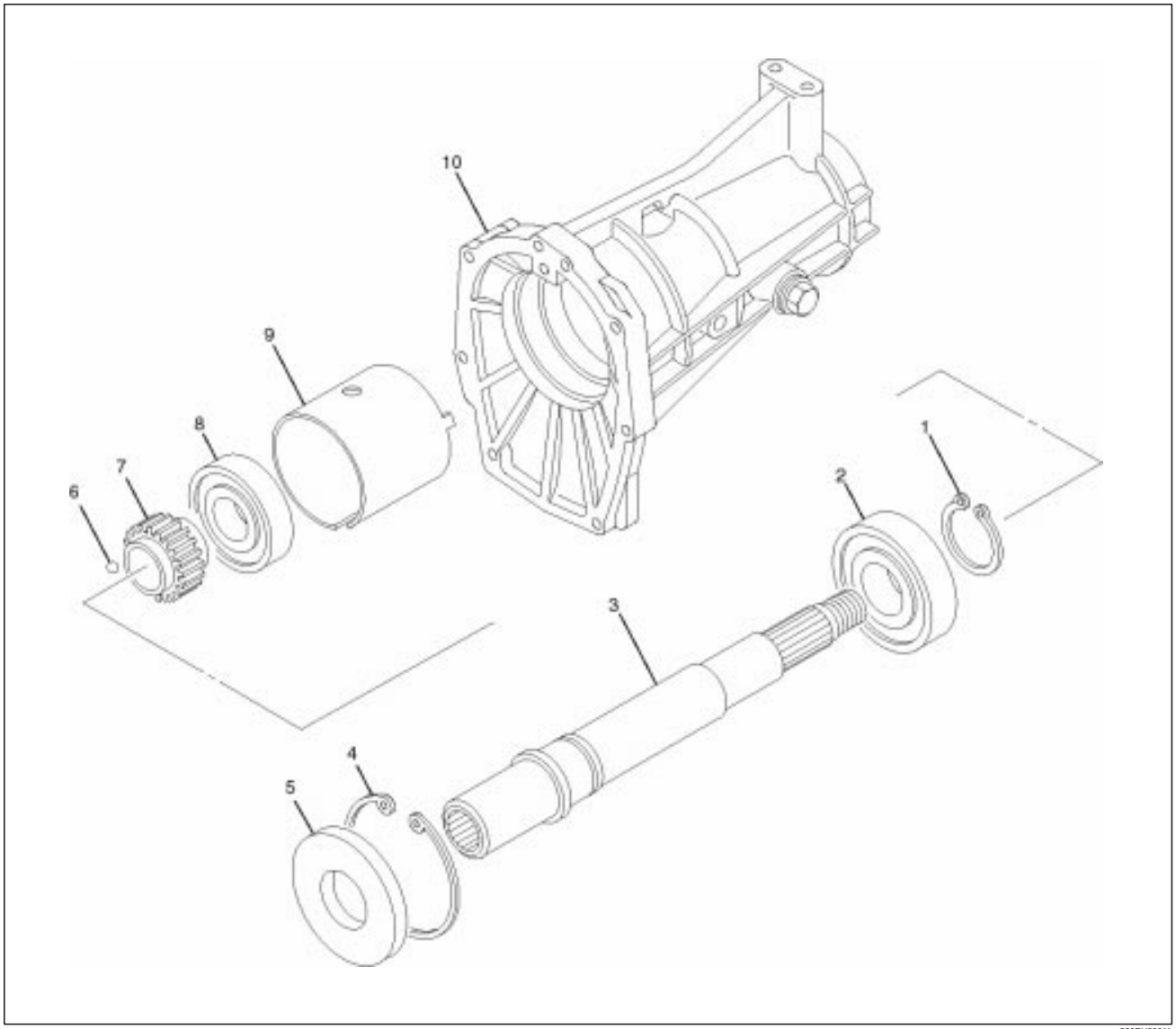

220RY00011

Legend

(1) Bearing Snap Ring
(2) Front Ball Bearing
(3) Extension Shaft
(4) Bearing Snap Ring
(5) Front Oil Seal
(6) Ball
(7) Speedometer Drive Gear
(8) Rear Ball Bearing
(9) Air Breather Pipe Collar
(10) Extension Case

Downloaded from www.Manualslib.com manuals search engine

Disassembly

1. Remove front oil seal (5) from the extension housing assembly.

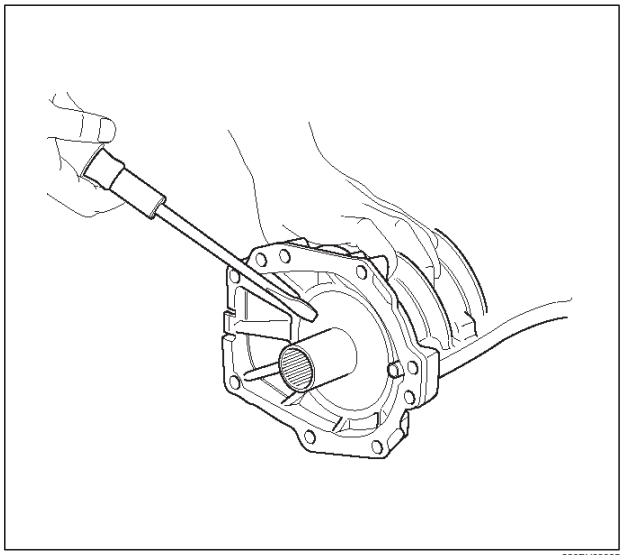

220RY00005

2. Remove front snap ring (4), use a pair of snap ring pliers to remove the snap ring.
3. Remove the extension shaft with ball bearing from the extension case (10).
4. Remove rear ball bearing (8), using a bench press and the bearing remover J–22912–01.

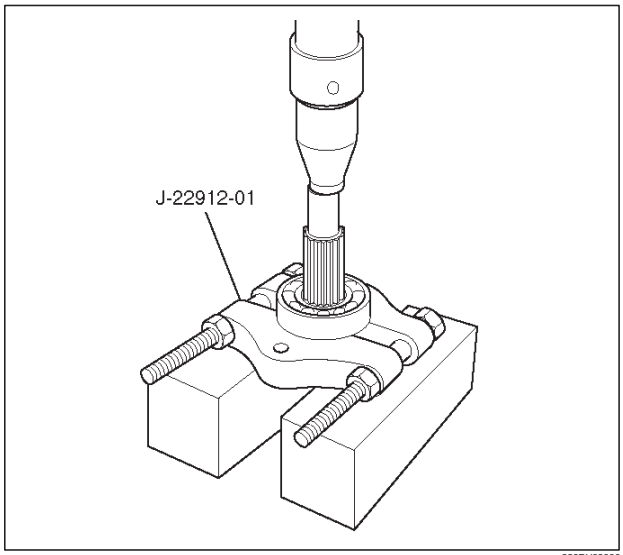

220RY00006

5. Remove speedometer drive gear (7).
6. Remove ball (6).
7. Remove bearing snap ring (1), using a pair of snap ring pliers.
8. Remove extension shaft (3) from the front ball bearing (2), using a bench press and bearing remover J–22912–01.

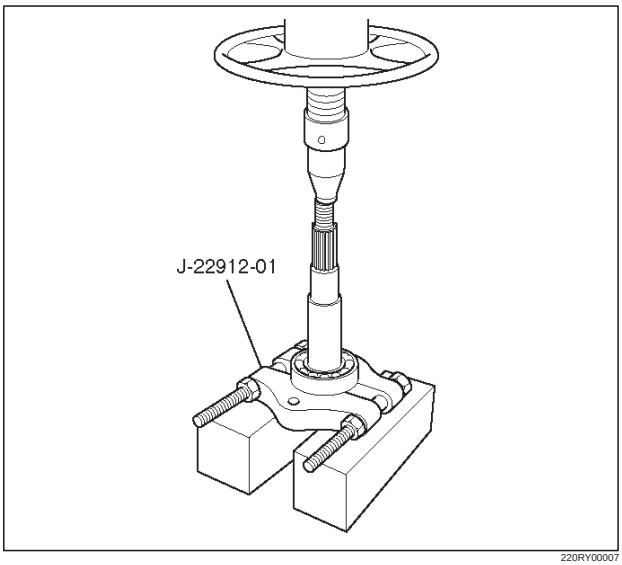

220RY00007

9. Remove air breather pipe collar (9) from the extension housing assembly.

Reassembly

1. Install air breather pipe collar (9) to the extension housing assembly.

CAUTION: PUT THE AIR BREATHER PIPE COLLAR INTO THE EXTENSION CASE AS MATCHING THE PROTRUSION OF THE AIR BREATHER PIPE COLLAR WITH THE DEPRESSION OF THE EXTENSION CASE.

2. Install front ball bearing (2) to the extension shaft (3), using the ball bearing installer J–22912–01.
3. Install bearing snap ring (1), using a pair of snap ring pliers.
4. Install ball (6).
5. Install speedometer drive gear (7).
6. Use the ball bearing installer J–22912–01 to install the rear ball bearing (8).
7. Install the extension shaft with ball bearing to the extension case (10).
8. Install front snap ring (4).

Downloaded from www.Manualslib.com manuals search engine

9. Install front oil seal (5).

CAUTION: Hammering the outside of the oil seal equally, install it to the extension case entirely.

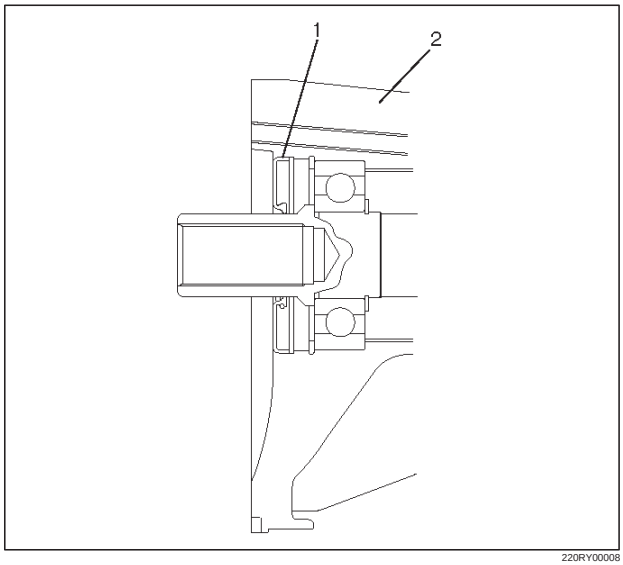

220RY00008

Legend

(1) Front Oil Seal
(2) Extension Case

Inspection and Repair

1. Make the necessary repair or parts replacement if wear, damage or any other abnormal conditions are found during inspection.
2. Wash all parts thoroughly in clean solvent. Be sure all old lubricant, metallic particles, dirt, or foreign material are removed from the surfaces of every part. Apply compressed air to each oil feed port and channel in each case half to remove any obstructions or cleaning solvent residue.

Bearings

1. Inspect the condition of all bearings. Wash bearings thoroughly in a cleaning solvent. Apply compressed air to the bearings.

NOTE: Do not allow the bearings to spin. Turn them slowly by hand. Spinning bearings may damage the rollers.

2. Lubricate the bearings with a light oil and check them for roughness by slowly turning the race by hand.

Ball Bearing Play

1. Use a dial indicator to measure the ball bearing play.
2. If the measured value exceeds the specified limit, the ball bearing must be replaced.

Limit : 0.2 mm (0.008 in)

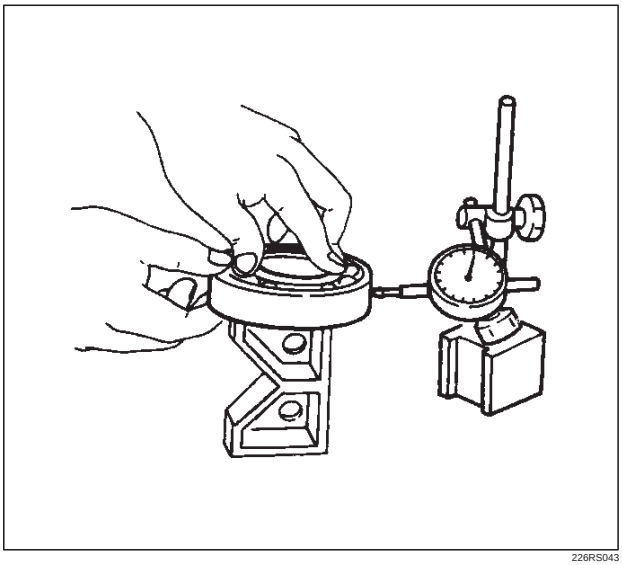

226RS043

Downloaded from www.Manualslib.com manuals search engine

Main Data and Specifications

General Specifications

Oil capacity	0.185 lit. (0.195 U.S. quart)
Type of lubricant	ATF DEXRON®–III

Torque Specifications

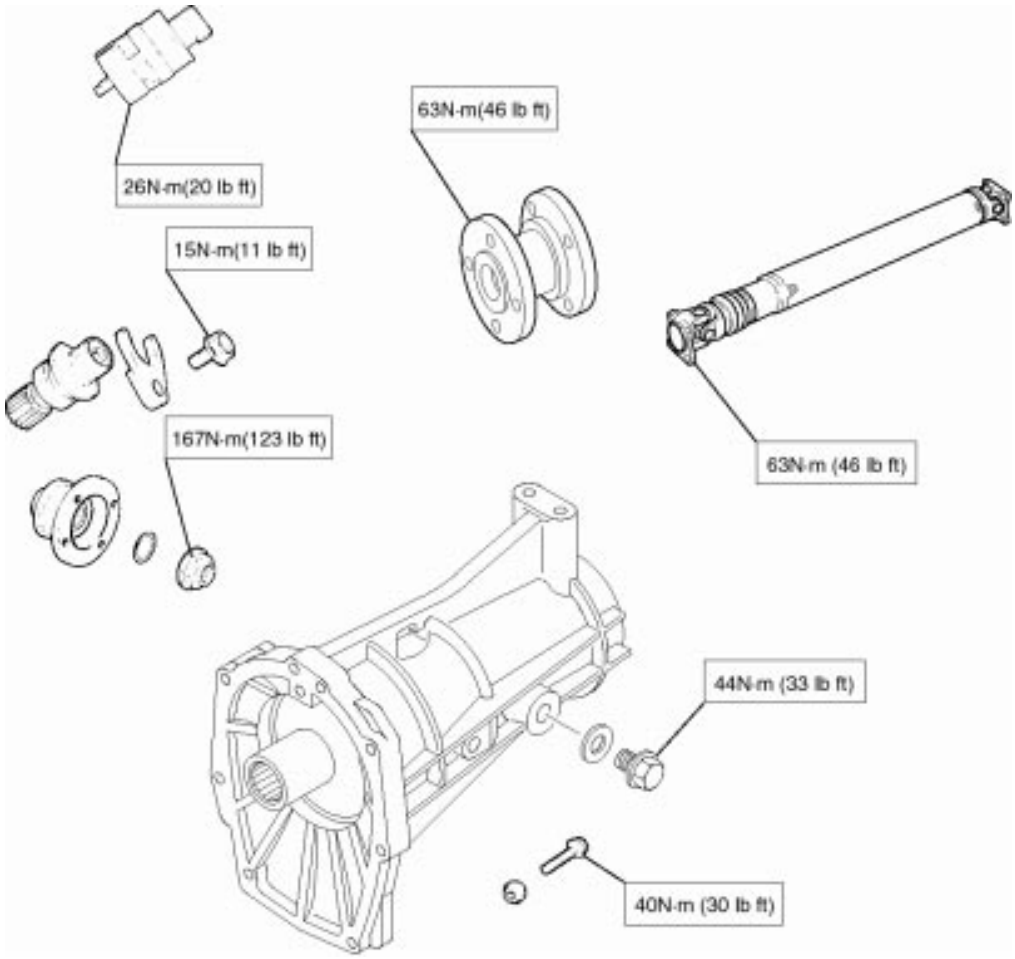

220RY00012

Downloaded from www.Manualslib.com manuals search engine

Special Tools

ILLUSTRATION	PART NO. PART NAME
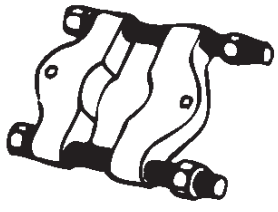 901RS258	**J–22912–01** Bearing remover/installer
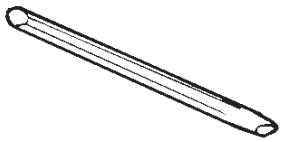 901RS263	**J–39209** Punch; end nut
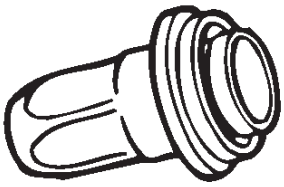 901RS272	**J–39208** Rear oil seal installer
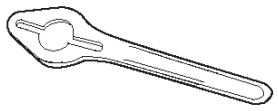 901RW071	**J–8614–11** Flange holder

Downloaded from www.Manualslib.com manuals search engine

TROOPER

TRANSMISSION

TRANSMISSION CONTROL SYSTEM (4L30–E)

CONTENTS

Service Precaution 7A1–2
General Description 7A1–2
Electronic Control Diagram 7A1–3
Powertrain Control Module (PCM) 7A1–4
Control System Diagram 7A1–5
Shift Control 7A1–6
Band Apply Control 7A1–6
Torque Converter Clutch Control (Electronically Controlled Capacity Clutch = ECCC) 7A1–6
Line Pressure Control 7A1–6
On–Board Diagnostic System 7A1–6
Fail Safe Mechanism 7A1–6
Torque Management Control 7A1–6
ATF Warning Control 7A1–6
ABS Control 7A1–6
Reverse Lock Out Control 7A1–6
Downhill Control 7A1–6
Uphill Control 7A1–6
Shift Mode Control 7A1–7
Gear Shift Control 7A1–8
Winter Drive Mode 7A1–9
Backup Mode 7A1–9
Functions of Input / Output Components . . 7A1–10
Diagnosis 7A1–11
Electronic Diagnosis 7A1–11
Check Trans Indicator 7A1–11
Diagnostic Check 7A1–11
“Check Trans” Check 7A1–12
Tech 2 OBD II Connection 7A1–13
Transmission Data 7A1–18
OBD II Diagnostic Management System . . 7A1–19
16 – Terminal Data Link Connector (DLC) . 7A1–20
Malfunction Indicator Lamp (MIL) 7A1–21
Types Of Diagnostic Trouble Codes (DTCs) 7A1–21
Clear DTC 7A1–21
DTC Check 7A1–22
PCM Precaution 7A1–22
Information On PCM 7A1–22
Intermittent Conditions 7A1–22
Transmission And PCM Identification 7A1–23
Isuzu Trooper 7A1–23
Diagnostic Trouble Code (DTC) Identification 7A1–24
DTC P0218 Transmission Fluid Over Temperature 7A1–25
DTC P0705 Transmission Range Switch (Mode Switch) Illegal Position 7A1–27
DTC P0706 Transmission Range Switch (Mode Switch) Performance 7A1–30
DTC P0711 Transmission Fluid Temperature (TFT) Sensor Performance 7A1–33
DTC P0712 Transmission Fluid Temperature (TFT) Sensor Circuit Low Input 7A1–36
DTC P0713 Transmission Fluid Temperature (TFT) Sensor Circuit High Input 7A1–39
DTC P0719 Brake Switch Circuit Low (Stuck On) 7A1–42
DTC P0722 Automatic Transmission Output Speed Sensor (OSS) Low Input 7A1–45
DTC P0723 Automatic Transmission Output Speed Sensor (OSS) Intermittent 7A1–48
DTC P0724 Brake Switch Circuit High (Stuck Off) 7A1–51
DTC P0730 Gear Error Without Input Speed 7A1–53
DTC P0742 Torque Converter Clutch (TCC) System Stuck On 7A1–56
DTC P0748 Pressure Control Solenoid (PCS) (Force Motor) Circuit Electrical 7A1–58
DTC P0751 Shift Solenoid A Performance (Stuck OFF) 7A1–60
DTC P0752 Shift Solenoid A Performance (Stuck ON) 7A1–62
DTC P0753 Shift Solenoid A Electrical 7A1–64
DTC P0756 Shift Solenoid B Performance (Stuck OFF) 7A1–67
DTC P0757 Shift Solenoid B Performance (Stuck ON) 7A1–69
DTC P0758 Shift Solenoid B Electrical 7A1–71
DTC P1850 Brake Band Apply Solenoid Malfunction 7A1–75
DTC P1860 TCC PWM Solenoid Electrical . 7A1–79
DTC P1870 Transmission Component Slipping (TCC Stuck OFF) 7A1–82
Connector List 7A1–84

Downloaded from www.Manualslib.com manuals search engine

Service Precaution

WARNING: THIS VEHICLE HAS A SUPPLEMENTAL RESTRAINT SYSTEM (SRS). REFER TO THE SRS COMPONENT AND WIRING LOCATION VIEW IN ORDER TO DETERMINE WHETHER YOU ARE PERFORMING SERVICE ON OR NEAR THE SRS COMPONENTS OR THE SRS WIRING. WHEN YOU ARE PERFORMING SERVICE ON OR NEAR THE SRS COMPONENTS OR THE SRS WIRING, REFER TO THE SRS SERVICE INFORMATION. FAILURE TO FOLLOW WARNINGS COULD RESULT IN POSSIBLE AIR BAG DEPLOYMENT, PERSONAL INJURY, OR OTHERWISE UNNEEDED SRS SYSTEM REPAIRS.

CAUTION: Always use the correct fastener in the proper location. When you replace a fastener, use ONLY the exact part number for that application. ISUZU will call out those fasteners that require a replacement after removal. ISUZU will also call out the fasteners that require thread lockers or thread sealant. UNLESS OTHERWISE SPECIFIED, do not use supplemental coatings (Paints, greases, or other corrosion inhibitors) on threaded fasteners or fastener joint interfaces. Generally, such coatings adversely affect the fastener torque and the joint clamping force, and may damage the fastener. When you install fasteners, use the correct tightening sequence and specifications. Following these instructions can help you avoid damage to parts and systems.

General Description

The 4L30–E is a 4–speed fully automatic transmission. It uses a microcomputer as a control unit to judge running conditions including throttle opening rate and vehicle speed, then it sets the shifting point in the optimum timing so that best driving performance can be achieved.
In addition, the built–in shift mode select function can select three shift modes according to the driver's preference:

- Normal mode –Normal shift pattern.
- Winter mode –Starts in 3rd gear to reduce slippage on ice or snow.
- Power mode has a delayed upshift for when more powerful acceleration is required.

Also, the built–in fail safe function ("backup mode") assures driving performance even if the vehicle speed sensor, throttle signal or any solenoid fails.
Further, the self–diagnostic function conducts diagnosis in a short time when the control system fails, thus improving serviceability.
The major features of 4L30–E are as follows:

- A compact structure consisting of 2 sets of planetary gears and flat torque converter.
- Electronic control selects the optimum shift mode according to the driving conditions.
- Electronic control maintains the optimum hydraulic pressure for clutch, band brake as well as transmission so that shift feeling is improved.
- Two sets of planetary gears reduce friction of power train.

  Also, a lockup mechanism in the torque converter reduces fuel consumption.
- Wide gear ratio and high torque rate of torque converter provide excellent starting performance.

Downloaded from www.Manualslib.com manuals search engine

Electronic Control Diagram

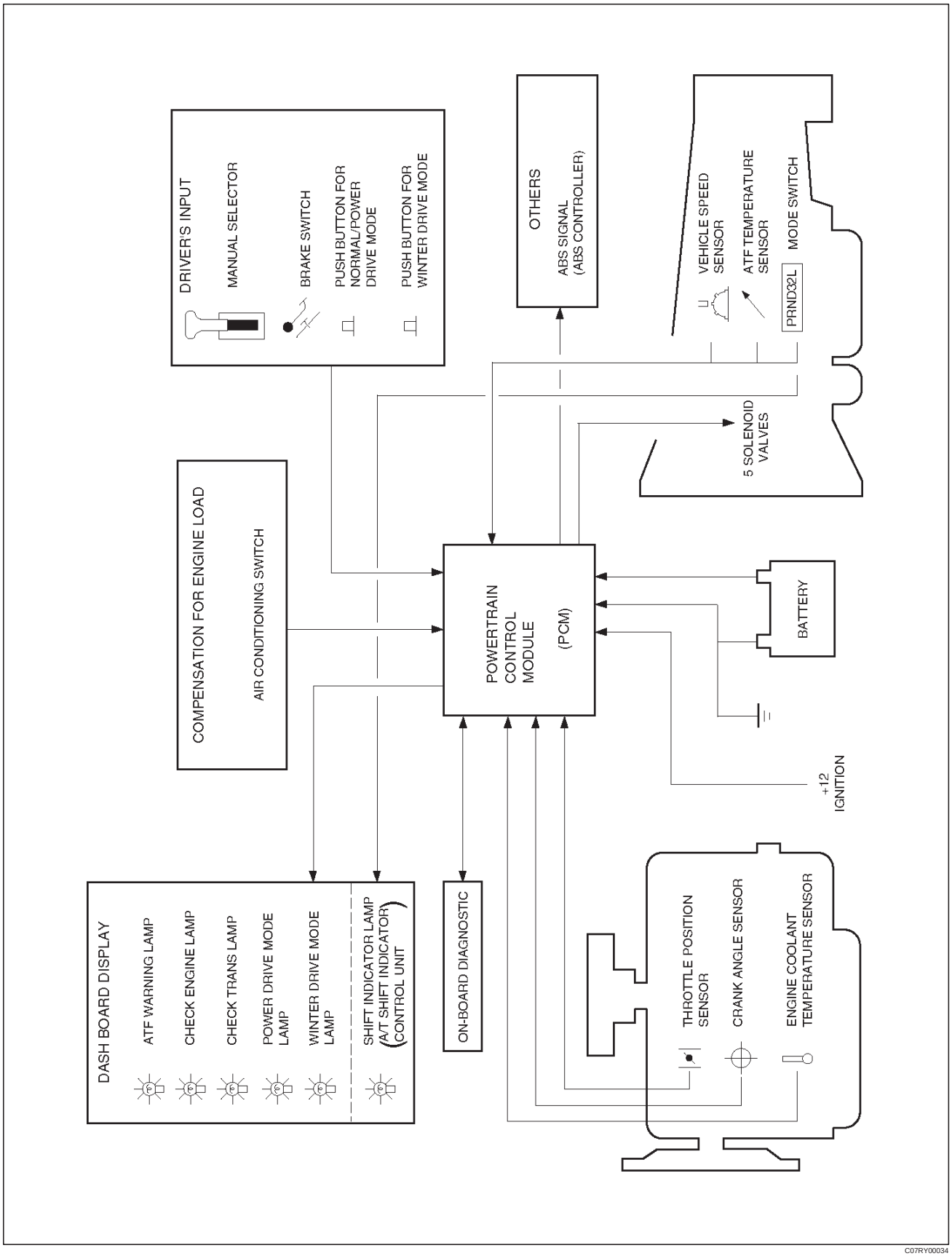

C07RY00034

Downloaded from www.Manualslib.com manuals search engine

Powertrain Control Module (PCM)

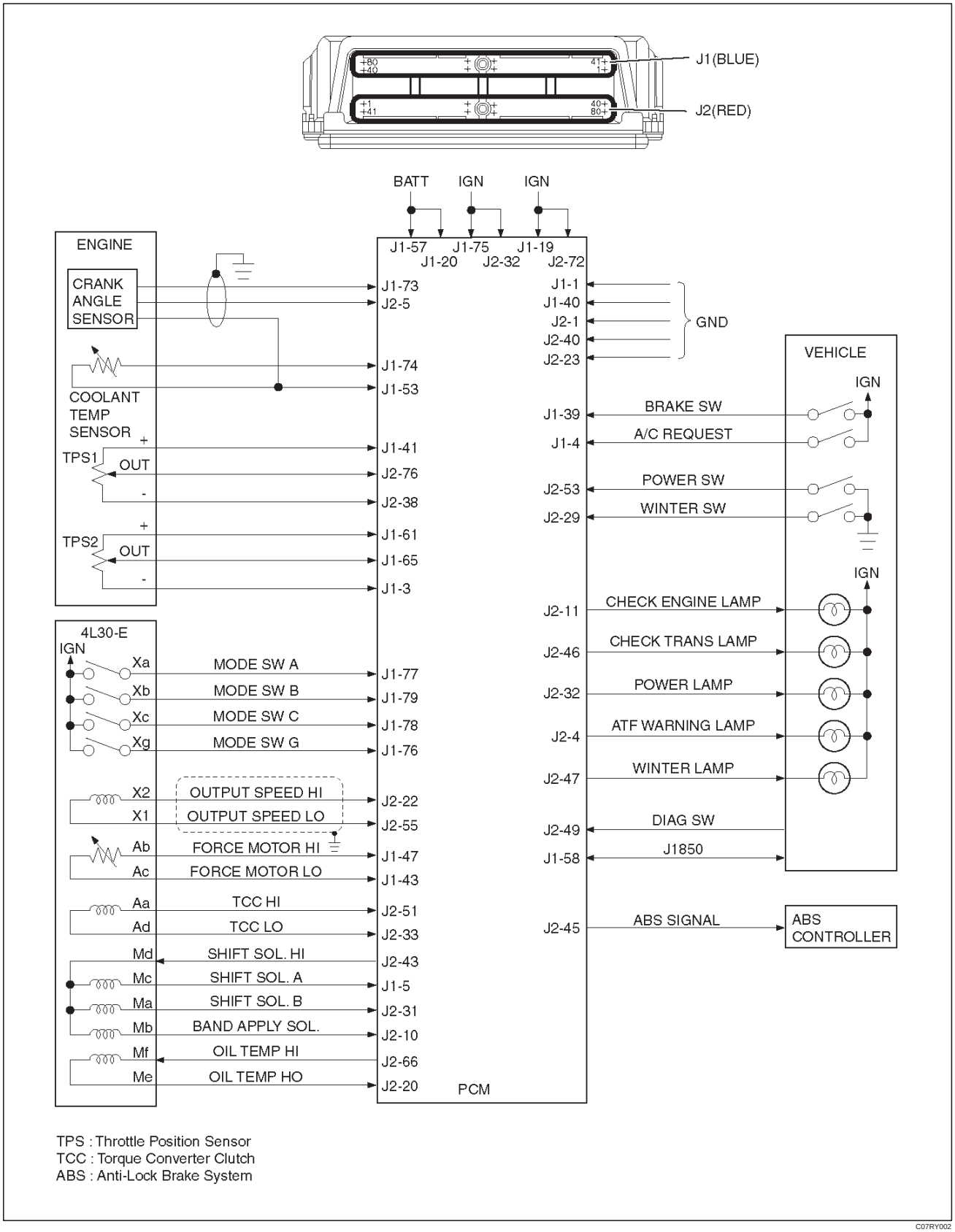

Downloaded from www.Manualslib.com manuals search engine

Control System Diagram

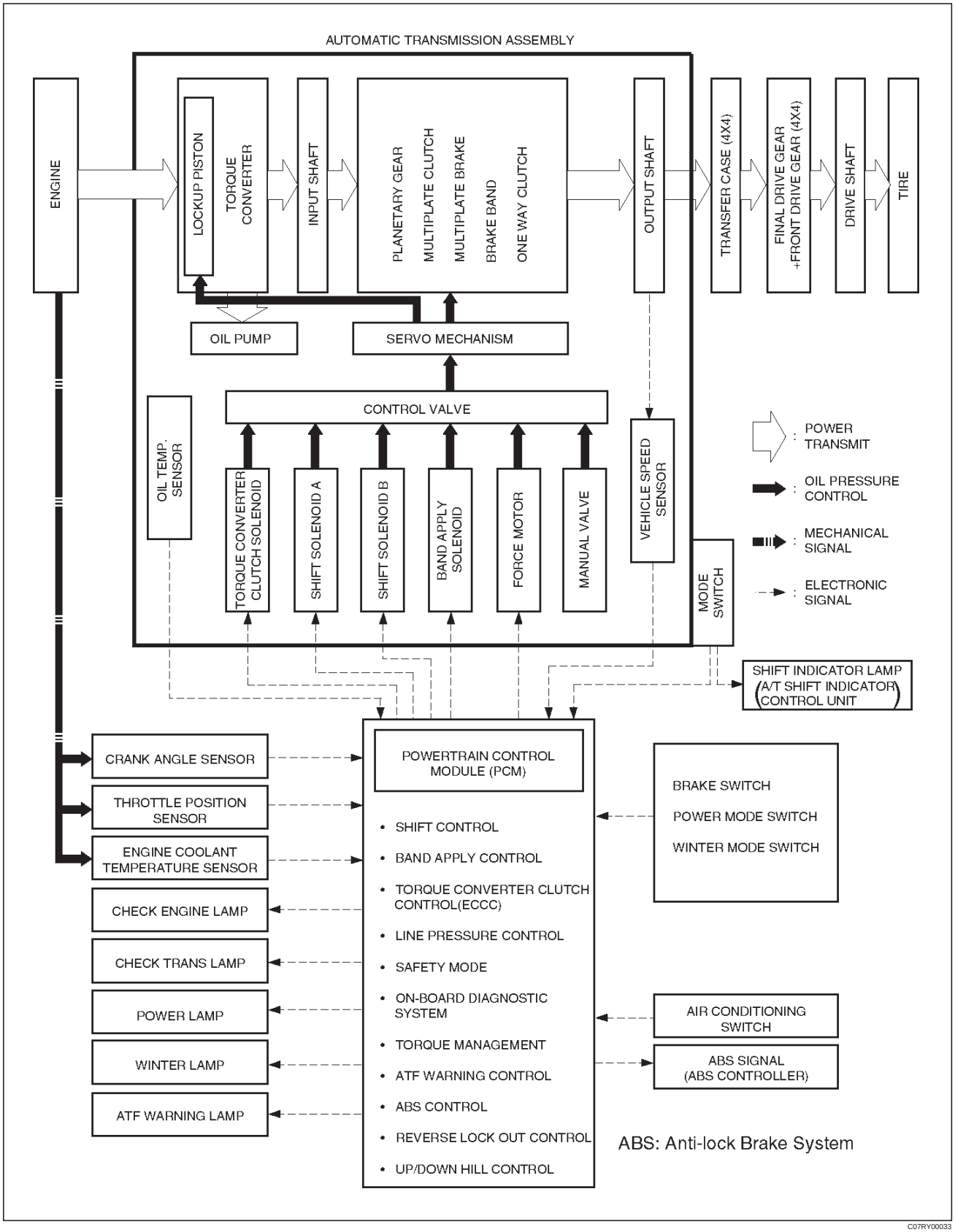

Downloaded from www.Manualslib.com manuals search engine

Shift Control

The transmission gear is shifted according to the shift pattern selected by the driver. In shifting gears, the gear ratio is controlled by the ON/ OFF signal using the shift solenoid A and the shift solenoid B.

Band Apply Control

The band apply is controlled when in the 3–2 downshift (engine overrun prevention) and the garage shift (shock control).
The band apply solenoid is controlled by the signal from the Pulse Width Modulation (PWM) to regulate the flow of the oil.

Torque Converter Clutch Control (Electronically Controlled Capacity Clutch = ECCC)

The clutch apply is controlled by moving the converter clutch valve by commanding Torque Converter Clutch (TCC) solenoid using the PWM signal.

Line Pressure Control

The throttle signal allows the current signal to be sent to the force motor. After receiving the current signal, the force motor activates the pressure regulator valve to regulate the line pressure.

On–Board Diagnostic System

Several malfunction displays can be stored in the Powertrain Control Module (PCM) memory, and read out of it afterward.
The serial data lines, which are required for the testing of the final assembly and the coupling to other electronic modules, can be regulated by this function.

Fail Safe Mechanism

If there is a problem in the transmission system, the PCM will go into a “backup” mode.
The vehicle can still be driven, but the driver must use the select lever to shift gears.

Torque Management Control

The transmission control side sends the absolute spark advance signal to the engine control side while the transmission is being shifted. This controls the engine spark timing in compliance with the vehicle running condition to reduce the shocks caused by the change of speed.

ATF Warning Control

The oil temperature sensor detects the ATF oil temperature to control the oil temperature warning, TCC, and the winter mode.

ABS Control

When the select lever is at “L” or “R” range, a signal is sent to the ABS controller as one of the ABS control conditions.

Reverse Lock Out Control

With the selector lever in reverse position, the PCM will not close the PWM solenoid until the vehicle is below 15 km/h (9.3 mph), thus preventing reverse engagement above this speed.

Downhill Control

This mode is automatically activated from “NORMAL” mode only when downhill conditions are recognized.
The shift pattern is identical to “NORMAL” mode except 3-4 and 4-3 shift lines at low throttle modified to get engine braking on a larger speed range.
ECCC lines unchanged compared to “NORMAL” mode.

Uphill Control

When Uphill condition are recognized the 2-3 and 3-4 shift and TCC apply are down only when the engine torque is sufficient in order to avoid shift hunting.

Downloaded from www.Manualslib.com manuals search engine

Shift Mode Control

① Mode Type

Mode Type	Select lever position
Normal drive mode (NOR)	Entire range (excluding "R")
Power drive mode (PWR)	Entire range (excluding "R")
Winter drive mode	"D" range only

② Mode selection

	SWITCH (SW)		LAMP	
Mode Type	POW/NOR. SW	WINTER SW	POWER DRIVE LAMP	WINTER DRIVE LAMP
Normal drive mode (NOR)	OFF	OFF	OFF	OFF
Power drive mode (PWR)	ON	OFF	ON	OFF
Winter drive mode	ON/OFF	ON	OFF	ON

However, the winter switch prevails over the PWR/NOR switch.
The mode becomes normal drive mode when the winter switch is operated from ON to OFF.

③ Comparison of mode

(1) The normal drive mode is set at the normal shift points.

(2) The shift points of the power drive mode are shifted to the higher speed side, compared to the normal drive mode.

(3) The winter drive mode is a special mode used exclusively for starting in third gear.

Shift diagram

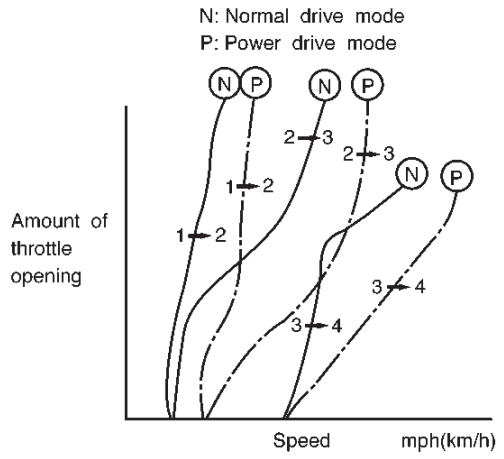

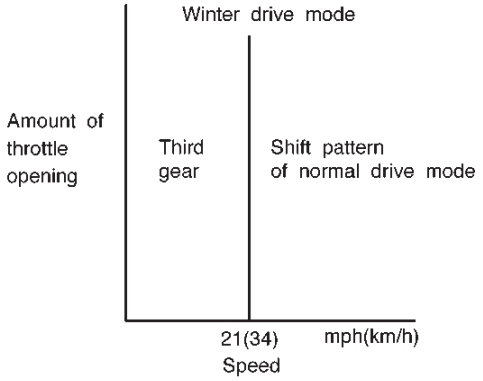

F07RX001

Downloaded from www.Manualslib.com manuals search engine

Gear Shift Control

① Shift pattern

SELECT LEVER RANGE	SHIFT PATTERN
D (Drive)	1⇄2TCC ⇄3TCC ⇄4TCC
3 (Third)	1⇄2TCC ⇄3TCC ←4TCC
2 (Second)	1⇄2TCC ←3TCC
L (First)	1←2

TCC = Torque Converter Clutch

② Gear position

The gear is selected by ON/OFF of two solenoids.

Gear \ SOL	A	B
4 (Fourth)	×	×
3 (Third)	○	×
2 (Second)	○	○
1 (First)	×	○
P (park) R (Reverse) N (Neutral)	×	○

○ = ON

× = OFF

Shift solenoid A (Normally closed) ON → PRESSURE TO SHIFT VALVE

Shift solenoid B (Normally open) OFF → PRESSURE TO SHIFT VALVE

③ Selecting gear pisition

Seven types of positions can be selected according to 5 signals from the mode switch as below.

SELECT LEVER RANGE	MODE SW TERMINALS				
	5(D)	8(A)	7(B)	6(C)	3(G)
P (park)	•	•			•
R (Reverse)	•	•	•		
N (Neutral)	•		•		•
D (Drive)	•		•	•	
3 (Third)	•	•	•	•	•
2 (Second)	•	•		•	
L (First)	•			•	•

• = Continuity

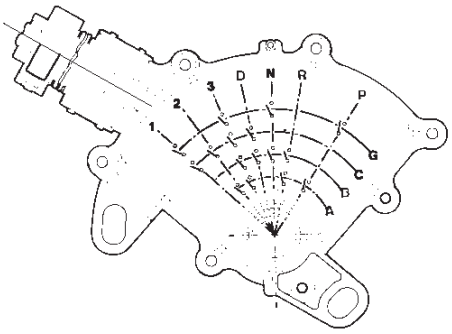

F07RT034

Downloaded from www.Manualslib.com manuals search engine

Winter Drive Mode

1. **Operation**
   The winter switch will operate when switched on after all of the following conditions are present:

   Conditions:

   a. The select lever position is “D” range only.
   b. Vehicle speed is 7 mph (11 km/h) or less.
   c. Transmission oil temperature is 130˚C (266˚F) or less.
   d. Accelerator opening is at 8% or less.
2. **Cancel Release**
   1. Cancellation by driver
      a. Turning off the winter drive mode switch
      b. Shifting select position to “3”, “2”, or “L” (winter drive mode is not canceled by selecting “D”, “N”, “R”, or “P”).
      c. Ignition key is turned off.
   2. Automatic cancellation
      a. When vehicle runs at 21mph (34 km/h) or more for 1 second or more
      b. When transmission oil temperature reaches 130˚C (266˚F) or above

NOTE: The mode returns to normal drive mode or power drive mode after the winter drive mode is canceled.

Backup Mode

If a major system failure occurs which could affect safety or damage the transmission under normal vehicle operation, the diagnostic system detects the fault and overrides the Powertrain Control Module (PCM).
The “CHECK TRANS” light flashes to alert the driver, and the transmission must be manually shifted as follows:

Select lever position	Gear Ratio Selected
D	4 (Fourth)
Manual 3	4 (Fourth)
Manual 2	3 (Third)
Manual L	1 (First)
R	Reverse

Shifts are firmer to prevent clutch slip and consequent wear. The fault should be corrected as soon as possible.

Downloaded from www.Manualslib.com manuals search engine

Functions of Input / Output Components

Components			Function
INPUT SIGNAL	Speed sensor (fixed to transmission)		Senses rotation of output shaft and feeds the data to Powertrain Control Module (PCM).
	Throttle position sensor (TPS) (fixed to engine)		Senses the extent of throttle valve opening and the speed of the throttle valve lever motion to open the valve. Feeds the data to PCM.
	Brake switch (fixed to brake pedal)		Senses whether the driver has pressed the brake pedal or not and feeds the information to PCM.
	Mode switch (fixed to transmission)		Senses the select lever position, and feeds the information to PCM.
	Power drive switch (fixed to front console)		Senses whether the driver has selected the power mode, and feeds the information to PCM.
	T/M oil temperature sensor		Senses the T/M oil temperature and feeds the data to PCM
	Engine coolant tempera-ture sensor		Senses the engine coolant temperature, and feeds the data to PCM.
	Engine speed signal		Feeds the signals monitoring engine speed to PCM from crank angle sensor.
	Air conditioning information		Senses whether the air conditioner has been switched on or not, and feeds the information to PCM.
	Winter switch (fixed to front console)		Senses whether the driver has selected the winter mode, and feeds the information to PCM.
	Cruise controller (Over-drive OFF signal)		Downshift takes place when overdrive OFF signal is received from auto cruise controller integrated in PCM.
OUTPUT SIGNAL	SOLENOID	Shift solenoid A, B	Selects shift point and gear position suited to the vehicle running condition on the basis of PCM output.
		Band apply solenoid	Controls oil flow suited to the vehicle running condition on the basis of PCM output.
		Torque Converter Clutch PWM solenoid	Controls clutch apply suited to the vehicle running condition on the basis of PCM output.
		Force motor (Pressure regulator valve)	Adjusts the oil pump delivery pressure to line pressure suited to the vehicle running condition on the basis of PCM output.
	Power drive mode lamp		Informs the driver whether the vehicle is in power mode or not.
	Winter drive mode lamp		Informs the driver whether the vehicle is in winter mode or not.
	CHECK TRANS lamp		Informs the driver of failure in the system.
	ATF warning lamp		Lights when ATF oil temperature rises.
	ABS signal		When the select lever is at “Reverse” or “L” range, sends a signal to the ABS controller as one of the ABS control conditions.

Downloaded from www.Manualslib.com manuals search engine

Diagnosis

Electronic Diagnosis

How To Diagnose The Problem

1. To avoid incorrect diagnostics, this book needs to be followed accurately. Unless stated, do not jump directly to a section that could contain the solution. Some important information may be missed.
2. The sections in CAPITALS and bold are the main sections that can be found in the contents.
3. The GOTO **"SECTION"** means to continue to check going to the "section".
4. The GOTHROUGH **"SECTION"** means to go through the "section" and then to go back to the place the GOTHROUGH was written.
5. BASIC ELECTRIC CIRCUITS:
   You should understand the basic theory of electricity. This includes the meaning of voltage, amps, ohms, and what happens in a circuit with an open or shorted wire. You should also be able to read and understand wiring diagrams.

Check Trans Indicator

Find CHECK TRANS indicator and verify if it is

A. Flashing: GOTO **DIAGNOSTIC CHECK.**

B. Staying on: GOTHROUGH **CHECK TRANS CHECK**.

C. Is never ON when the ignition key is turned on: GOTHROUGH **CHECK TRANS CHECK**

D. Is ON during 2 seconds at ignition but OFF after: Normal operation. No DTC or malfunction.

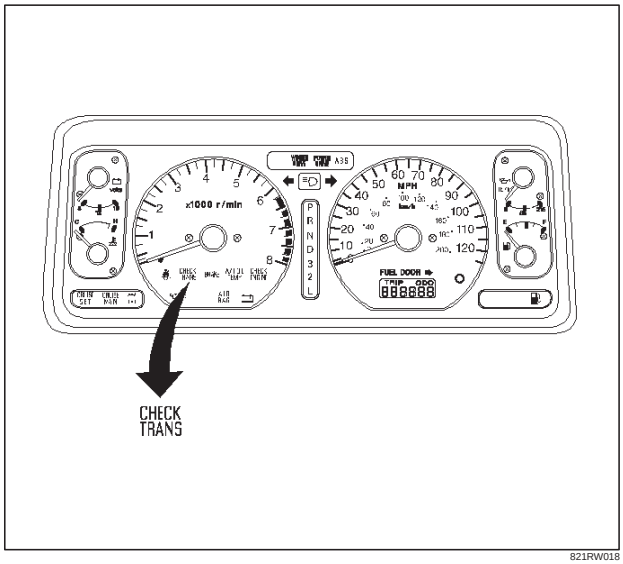

821RW018

Diagnostic Check

This test determines if the transmission or its input or output connections or sensors are failing.

1. Connect the Tech 2: GOTHROUGH **Tech 2 OBD II CONNECTION**.
2. Turn on the ignition but not the engine.
3. Push "F0" on Tech 2 to see the Diagnostic Trouble Code (DTC):
4. Do you have a DTC?
   YES: write down all code numbers and do the **DTC CHECK**
   NO: the DTC can not help you finding the problem.
   1. GOTHROUGH **"CHECK TRANS" CHECK**
   2. IF it is flashing and the flash is 0.2 seconds ON and 0.2 seconds OFF, this means that you should have a DTC stored. Please recheck GOTO **DIAGNOSTIC CHECK** and if you find the same problem, replace the Powertrain Control Module (PCM).

Normal

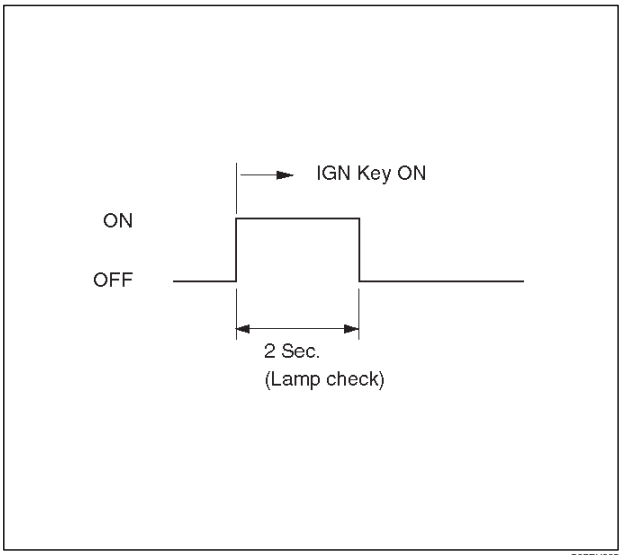

C07RY005

Abnormal

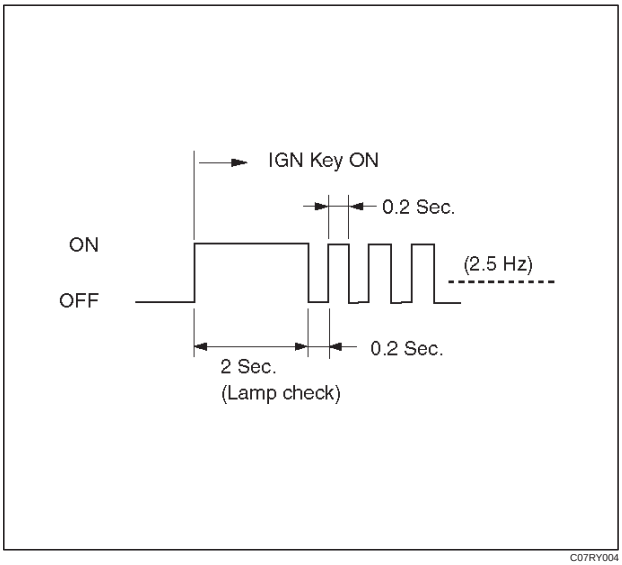

C07RY004

Downloaded from www.Manualslib.com manuals search engine

“Check Trans” Check

1. Indicator it is ON during 2 seconds at ignition (or when the engine is cranked) but it is OFF after the engine starts. The indicator is working normally GOTO **DIAGNOSTIC CHECK**.

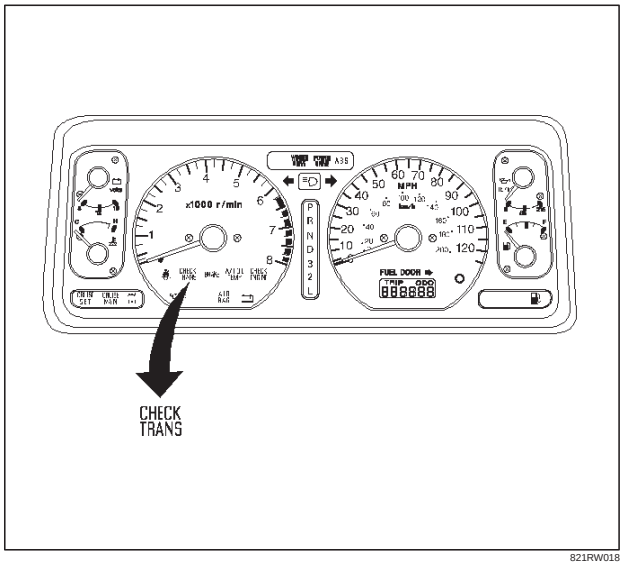

821RW018

Normal

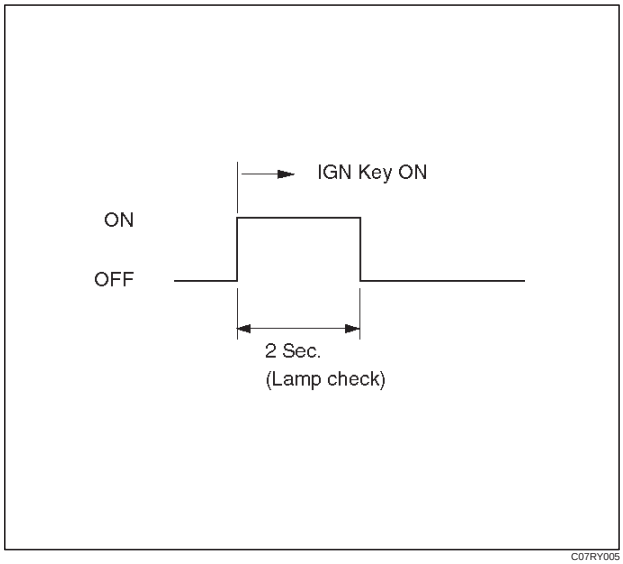

C07RY005

2. Indicator it is flashing and the flash is 0.2 seconds ON and 0.2 seconds OFF always when ignition is on (engine cranked or not). This means that there is a malfunction. GOTO **DIAGNOSTIC CHECK**.

Abnormal

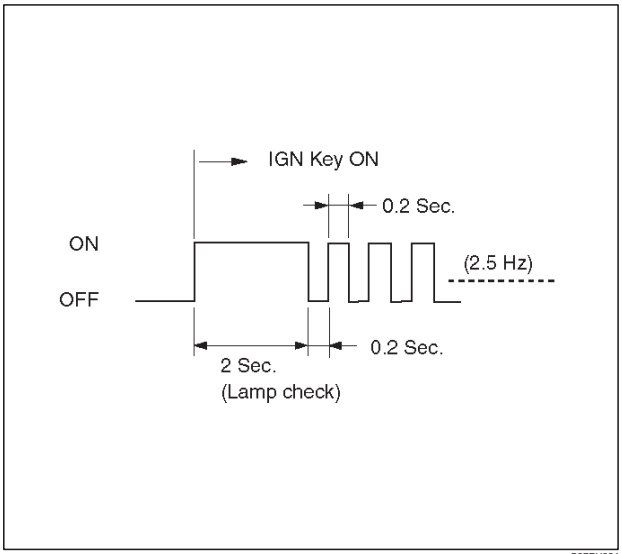

C07RY004

3. Indicator it is staying ON always when Ignition is ON.
   1. This means that connection between the lamp and the PCM is shorted to ground.
   2. Verify if instrument panel terminal 3 (WO/TOD) or 6 (WO/TOD) of connector I–9 is shorted to ground.
   3. Verify if the PCM connector J2 (RED) terminal 46 is shorted to ground.
   4. Verify that the instrument panel terminal 15 (WO/TOD) or 26 (W/TOD) of connector I–9 is connected to battery.
   5. IF problem solved: GOTO **CHECK TRANS INDICATOR**.

   NO:Replace Powertrain Control Module (PCM).
4. Indicator it is staying OFF with the ignition ON (engine OFF).
   1. This means that connection between the lamp and the PCM is shorted to battery or opened.
   2. Verify if instrument panel terminal 3 (WO/TOD) or 6 (WO/TOD) of connector I–9 is shorted to battery or open.
   3. Verify if the PCM connector J2 (RED) terminal 46 is shorted to battery or open.
   4. Verify that the instrument panel terminal 15 (WO/TOD) or 26 (W/TOD) of connector I–9 is connected to battery. If not, check the fuses and the connections (terminal 10 of connector H–25) voltage.

Downloaded from www.Manualslib.com manuals search engine

5. IF problem solved: GOTO **CHECK TRANS INDICATOR**.

NO: Replace Powertrain Control Module (PCM).

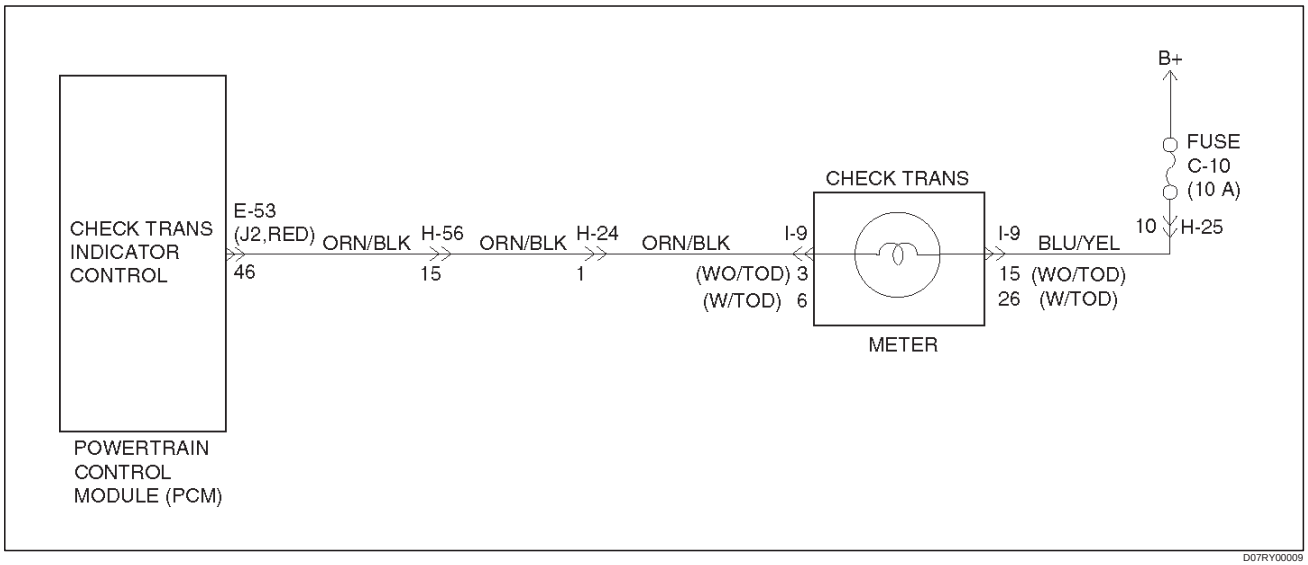

D07RY00009

Tech 2 OBD II Connection

In order to access OBD II Powertrain Control Module (PCM) data, use of the Tech 2 scan tool kit (7000086) is required.

1. The electronic diagnosis equipment is composed of:
   1. Tech 2 hand held scan tool unit (7000057) and DLC cable (3000095).

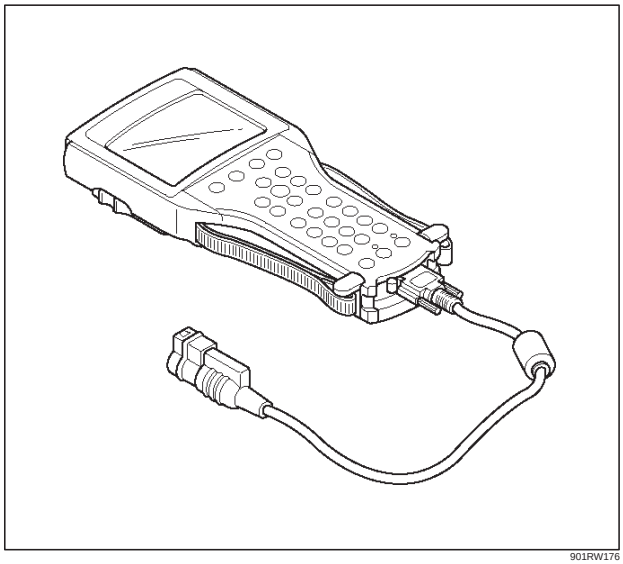

901RW176

   2. SAE 16/19 adaptor (3000098) (1), RS 232 loop back connector (3000112) (2), and PCMCIA card (3000117) (3).

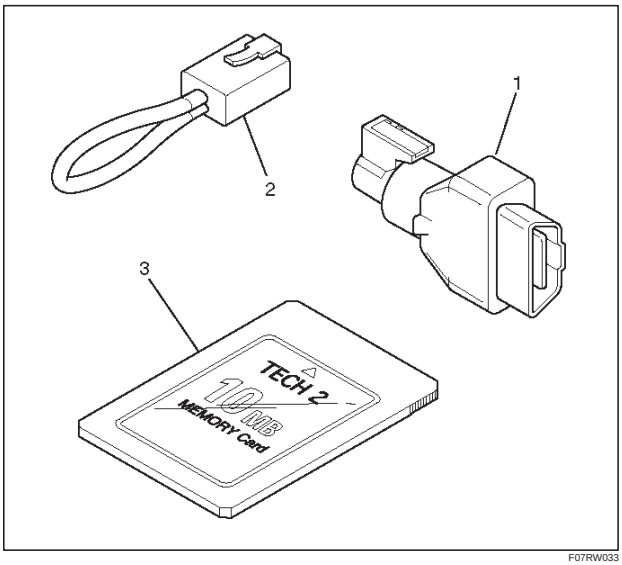

F07RW033

Downloaded from www.Manualslib.com manuals search engine

2. Connecting the TECH2

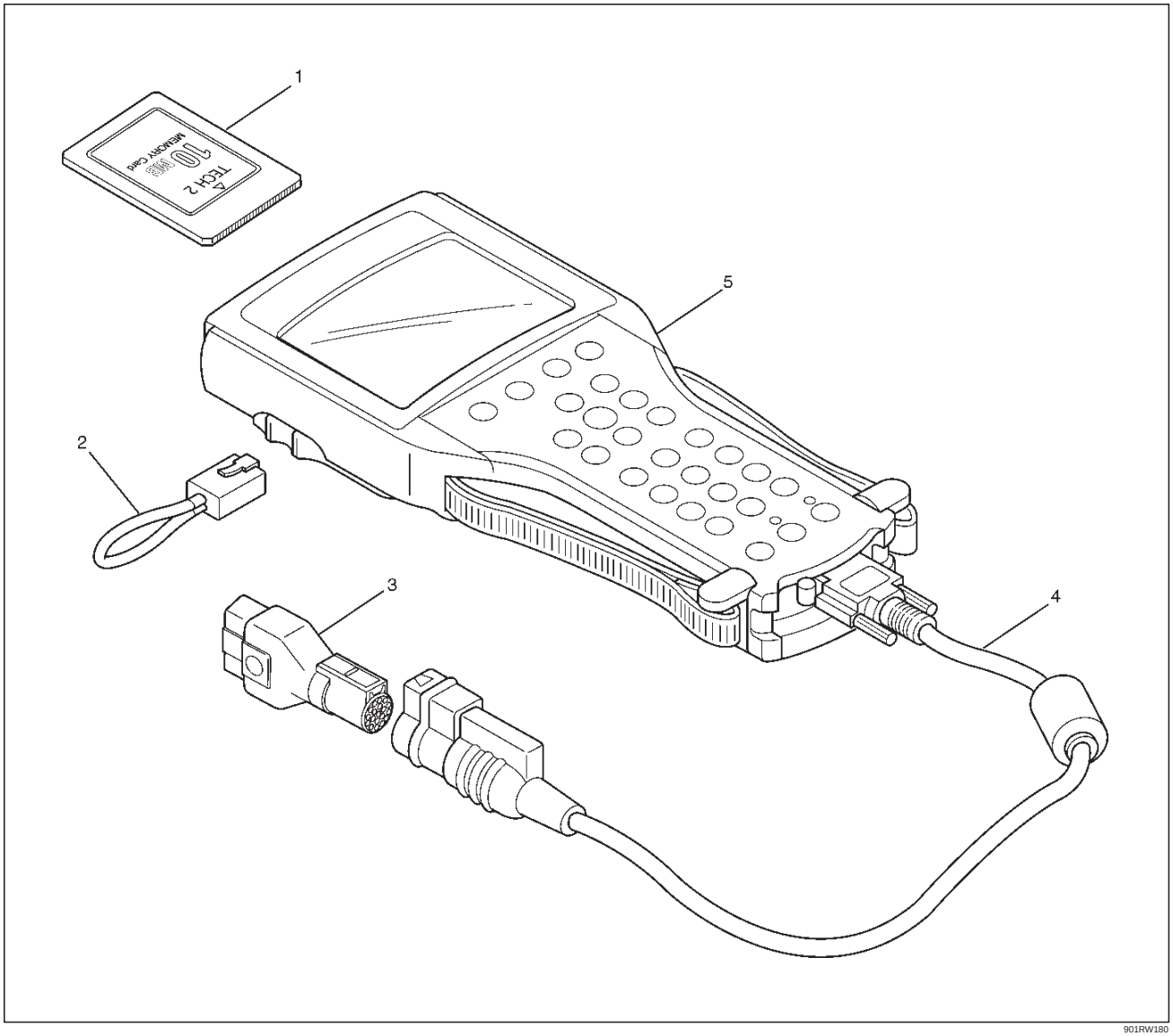

Legend

(1) PCMCIA Card
(2) RS 232 Loop Back Connector
(3) SAE 16/19 Adapter
(4) DLC Cable
(5) Tech 2

- Before operating the Isuzu PCMCIA card with the Tech 2, the following steps must be performed:

1. The Isuzu 2000 System PCMCIA card (1) inserts into the Tech 2 (5).
2. Connect the SAE 16/19 adapter (3) to the DLC cable (4).
3. Connect the DLC cable to the Tech 2 (5)
4. Make sure the vehicle ignition is off.

Downloaded from www.Manualslib.com manuals search engine

5. Connect the Tech 2 SAE 16/19 adaptor to the vehicle DLC.

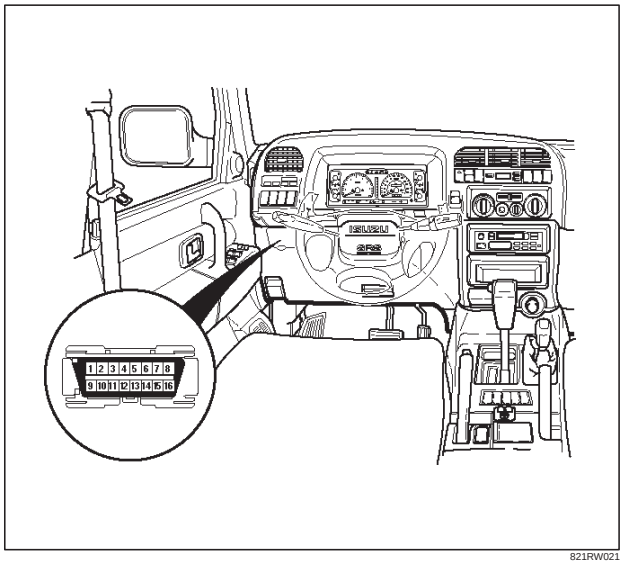

821RW021

6. The vehicle ignition turns on.
7. Verify the Tech 2 power up display.

060RW009

NOTE: The RS232 Loop back connector is only to use for diagnosis of Tech 2 and refer to user guide of the Tech 2.

8. The power up screen is displayed when you power up the tester with the Isuzu systems PCMCIA card. Follow the operating procedure below.

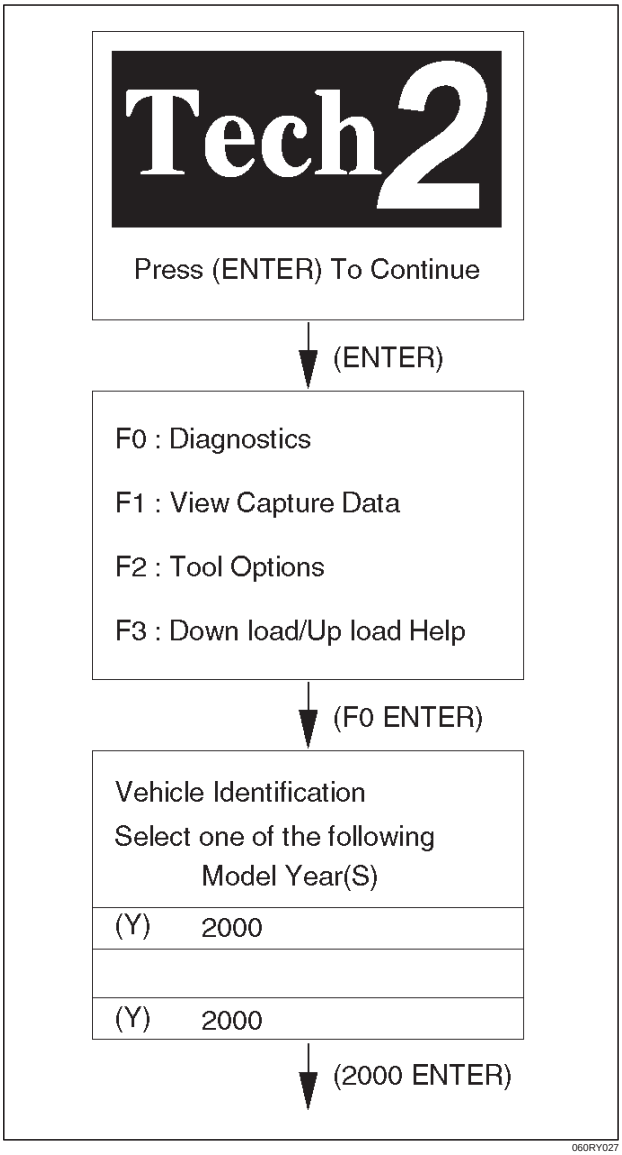

060RY027

Downloaded from www.Manualslib.com manuals search engine

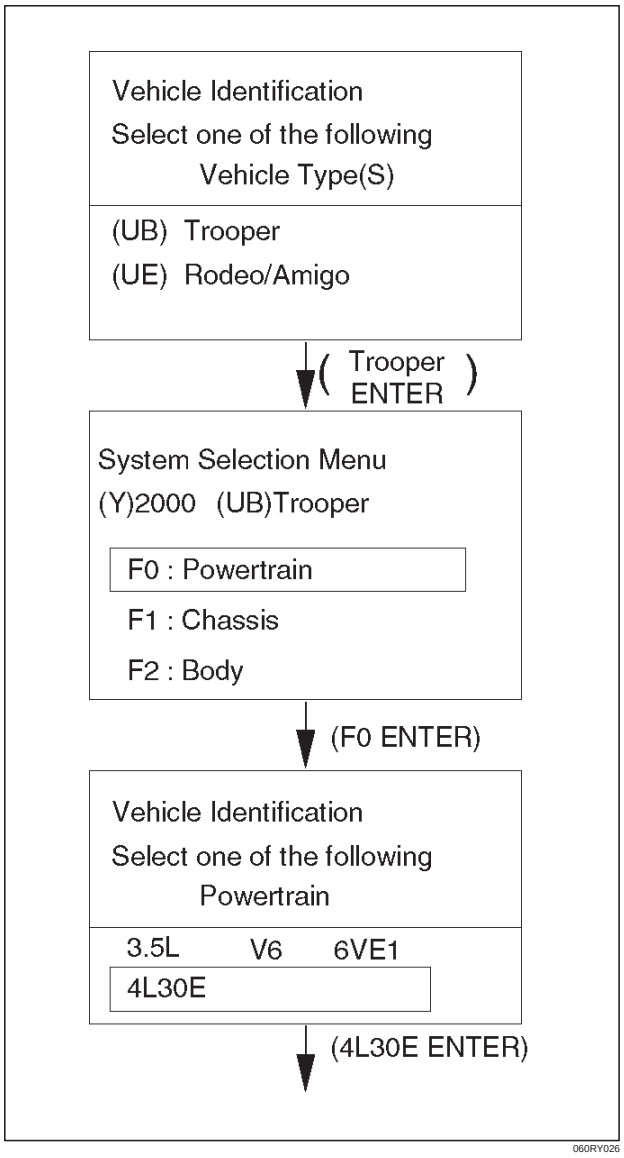

Once the test vehicle has been identified an “Application (Powertrain) Menu” screen appears. Please select the appropriate application.
The following table shows, which functions are used for the available equipment versions.

- F0: Diagnostic Trouble Codes
  - F0: Read DTC Info Ordered By Priority
  - F1: Clear DTC Information
  - F2: DTC Information
- F1: Data Display
  - F0: Transmission Data
  - F1: Output Driver Data
- F2: Snap Shot
- F3: Actuator Tests
  - F0: Lamps
    - F0: Check Light
    - F1: Winter Drive Lamp
    - F2: Power Drive Lamp
    - F3: AT Oil Temperature Lamp
  - F1: Solenoids
    - F0: Solenoid 1-2/3-4 Test
    - F1: Solenoid 2-3 Test
    - F2: TCC Solenoid
    - F3: Band Apply Solenoid
    - F4: Pressure Control Solenoid (PCS)
- F4: Function Tests
  - F0: Reset Oil Life Monitor

Downloaded from www.Manualslib.com manuals search engine

Diagnostic Trouble Codes

The purpose of the “Diagnostic Trouble Codes” mode is to display stored PCM trouble codes.
When “Diagnostic Trouble Codes” is selected an “Application Menu” screen appears.

Clear DTC Information

The purpose of the “Clear DTC Information” mode is to command the clearing of stored PCM trouble codes.
When “Clear DTC Information” is selected, a “Clear DTC Information”, warning screen appears. This screen informs you that by cleaning DTC’s, “all stored DTC information in controller will be erased”.
Do you want to clear DTC’s (Yes/No).
Press either the Yes or No key when answering.
After clearing codes, confirm system operation by test driving the vehicle.
Allow the vehicle to shift through all four forward gears in a manner which attempts to repeat the failure condition.

NOTE: When the trouble has not been repaired and the trouble code cannot be erased, check the vehicle again.

DTC Information

When “DTC Information” is selected, an “Application Menu” appears with a list of DTC information function keys addressing DTC specifics and their origins.
Function key selections may vary for particular vehicle and/or system.

Data Display

The purpose of the “Data Display” mode is to continuously monitor data parameters.
The current actual values of all important sensors and signals in the system are display through F1 mode.
When “Data Display” is selected an “Application Menu” appears. Please select either “Engine” or “Transmission Data Display”.
See “Transmission Data” on next page.

Snapshot

When “Snapshot” is selected an “Application Menu” appears.
When “Transmission Snapshot” application is selected from the “Application Menu”, a “Snapshot Menu” appears, displaying several options. “Snapshot” options may vary from one system to another.
“Snapshot” allows a recording of all vehicle parameters. There parameters may then be replayed at a future point in time.
This action allows you to focus on making the condition occur, rather than trying to view all of the data in anticipation of the fault. The snapshot will collect parameter information around a trigger point that you select.
When a snapshot is taken. It is recorded onto the PCMCIA memory card. When the Tech 2 is powered down. Snapshots are not lost.

Actuator Tests

The purpose of “Actuator Tests” mode is to check for correct operation of electronic system actuators.

Lamps

You can operate the lamps by pressing the ON and OFF buttons.
Preconditions: none

Solenoid

Solenoid 1-2/3-4, Solenoid 2-3, TCC Solenoid
You can operate the solenoids by pressing the ON and OFF buttons.
Preconditions: P–N position, no vehicle speed, no engine speed

Band Apply Solenoid
You can operate the solenoid by pressing the ON and OFF buttons.
Preconditions: P-N position, idle engine speed, no vehicle speed.

Pressure Control Solenoid (PCS)
You can set desired PCS Current using the UP (+25) and DOWN (–25) button. The PC Solenoid Data informs about PCS Current, Pressure and Duty Cycle.
Preconditions: P–N position, no engine speed, no vehicle speed

Reset Oil Life Monitor

Displays parameter “Oil Life Monitor” and resets to 100% if Yes-button is pressed on Reset-question. “No” leaves test.
Preconditions: no vehicle speed, no engine speed

Downloaded from www.Manualslib.com manuals search engine

Transmission Data

Item	Unit	Engine running at idle
Ignition Voltage	V	12.8 ~ 14.1 V
Engine Speed	RPM	750 ~ 900 RPM
Vehicle Speed	km/h, MPH	0 MPH
AT Output Speed (Automatic Transmission)	RPM	0 RPM
AT Input Speed Ratio (Automatic Transmission)		0.0
Throttle Position	%	0 %
AT Oil Temperature (Automatic Transmission)	˚C, ˚F	70 ~ 80˚C (158 ~ 176˚F)
Transmission Temperature	˚C, ˚F	75 ~ 110˚C (167 ~ 230˚F)
AT Oil Temperature Lamp (Automatic Transmission)	Off, On	Off
AT Oil Life Monitor (Automatic Transmission)	%	100 %
AT Oil Life Lamp (Automatic Transmission)	Off, On	Not used
Commanded Gear		1
Current Gear		1
Mode Switch A	Inactive, Active	Active
Mode Switch B	Inactive, Active	Inactive
Mode Switch C	Inactive, Active	Inactive
Mode Switch G	Inactive, Active	Active
Selector Position		Park
1–2 Shift Solenoid A	Off, On	Off
2–3 Shift Solenoid B	Off, On	On
Solenoid Brake Band	Off, On	Off
TCC Slip Speed	RPM	750 ~ 900 RPM
TCC Solenoid	Off, On	Off
TCC Duty Cycle	%	0 %
PCS Current (Pressure Control Solenoid)	A	approx. 1.0 A
PCS Duty Cycle (Pressure Control Solenoid)	%	approx. 45 %
Desired PCS Pressure (Pressure Control Solenoid)	kPa	43 ~ 52 kPa
Shift Pressure	kPa	43 ~ 52 kPa
Brake Switch	Off, On	On
Kickdown Switch	On, Off	Not used
Winter Switch	On, Off	Off
Winter Drive Lamp	Off, On	Off
Power Switch	Power Drive Normal	Normal
Power Drive Lamp	Off, On	Off
Emergency Mode	Off, On	Off
ABS Status	On, Off	Off

Downloaded from www.Manualslib.com manuals search engine

OBD II Diagnostic Management System

Powertrain Control Module (PCM) Location

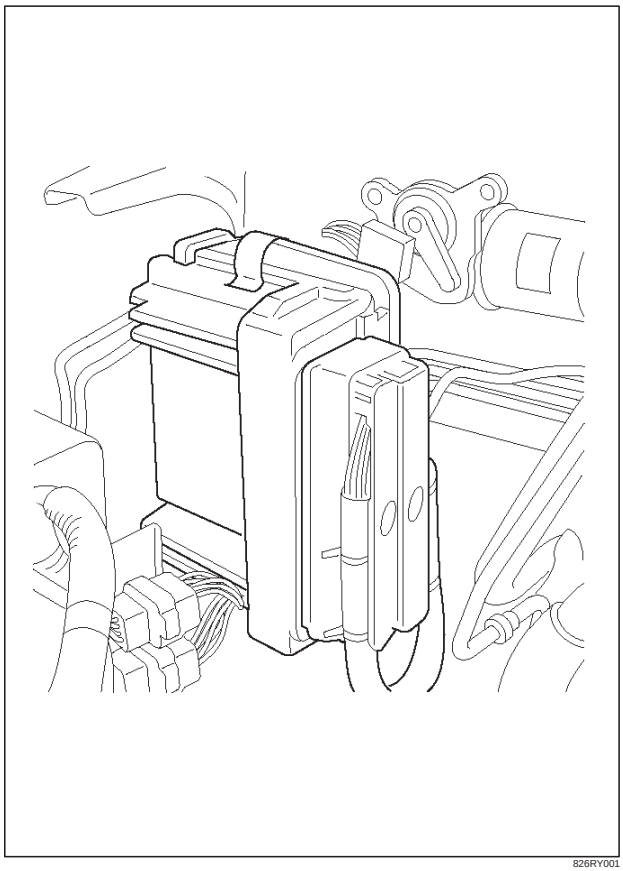

826RY001

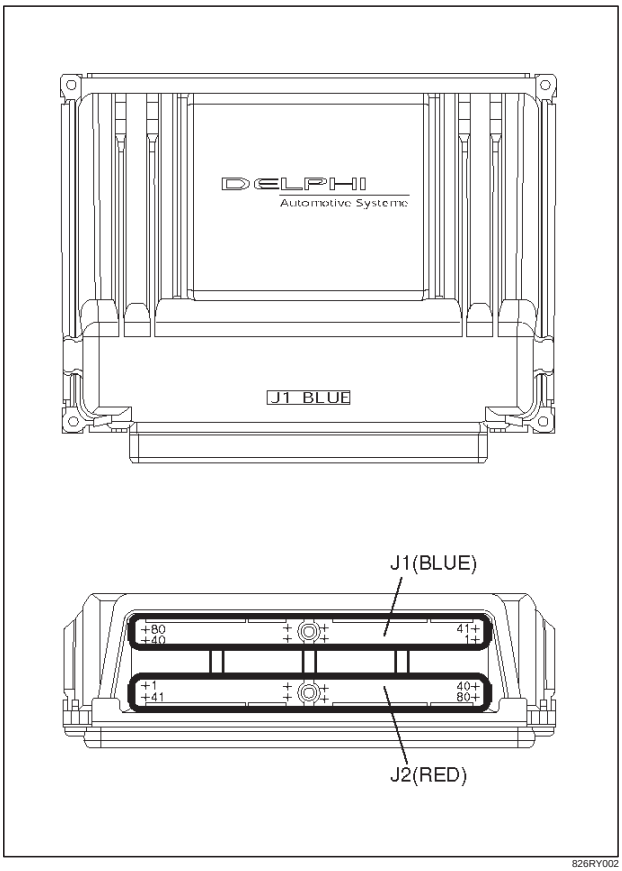

826RY002

Class 2 Serial Data Bus

OBD II technology requires a much more sophisticated PCM than does OBD I technology. The OBD II PCM diagnostic management system not only monitors systems and components that can impact emissions, but they also run active tests on these systems and components. The decision making functions of OBD II PCMs have also greatly increased. To accommodate this expansion in diagnostic complexity, Isuzu engineers have designed the Class 2 serial data bus, which meets SAE J1850 recommended practice for serial data.

"Serial Data" refers to information which is transferred in a linear fashion – over a single line, one bit at a time. A "Data Bus" is an electronic pathway through which serial data travels.

TROOPER previously used a 5 volt data bus called UART, which is an acronym for "Universal Asynchronous Receive and Transmit". When neither the vehicle's control module nor the diagnostic tool, such as a Tech 2, are "talking," the voltage level of the bus at rest is 5 volts. The two computers talk to each other at a rate of 8,192 bits per second, by toggling or switching the voltage on the data bus from 5 volts to ground.

Class 2 data, which is used on OBD II vehicles, is quite different. Data is transferred at a rate of 10.4 kilobits per second, and the voltage is toggled between zero and 7 volts.

Downloaded from www.Manualslib.com manuals search engine

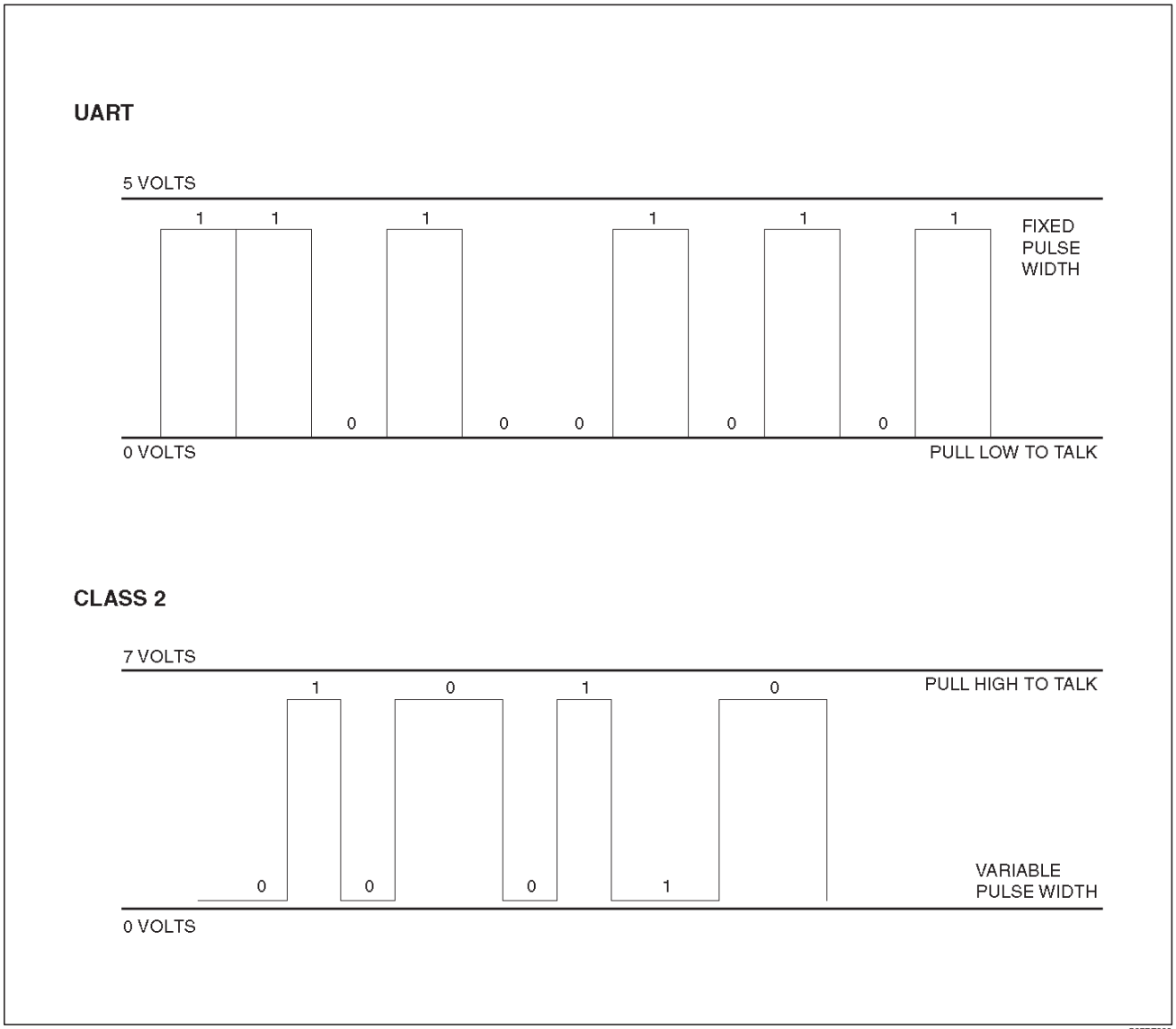

C07RT006

Class 2 data is also pulse width modulated. Each bit of information can have one of two lengths: long or short. On the other hand, UART data bits come in only one length (short). The pulse width modulation of Class 2 data allows better utilization of the data line.

The message carried on Class 2 data streams are also prioritized. This means that if two devices try to communication on the data line at the same time, only the higher priority message will continue. The device with the lower priority message must wait.

NOTE: The Class 2 data wire is always terminal 2 of the new 16–terminal Data Link Connector (DLC).

16 – Terminal Data Link Connector (DLC)

OBD II standardizes Data Link Connector (DLC) configurations. The DLC, formerly referred to as the ALDL, will be a 16–terminal connector found on the lower left side of the driver's side instrument panel. All manufacturers must conform to this 16–terminal standard.

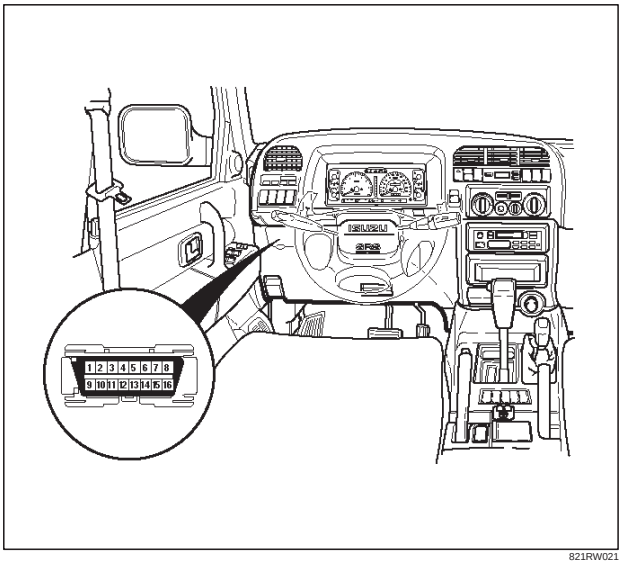

821RW021

Downloaded from www.Manualslib.com manuals search engine

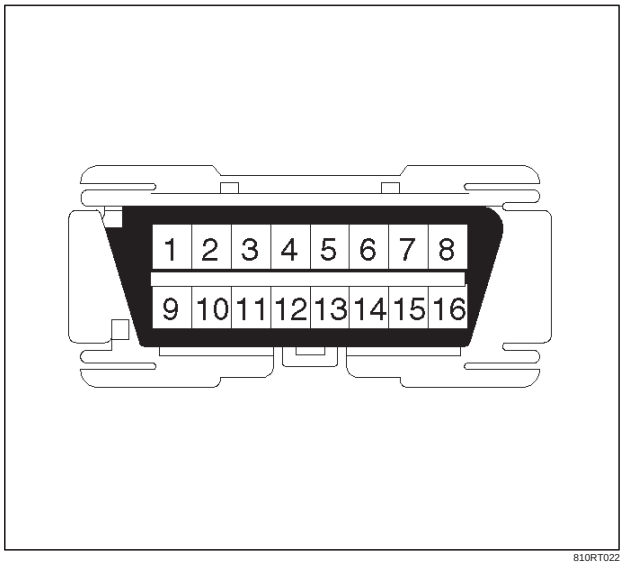

PIN 1 –	DIAG. SW
PIN 2 –	J1850 Bus + L line on 2–wire systems, or single wire (Class 2)
PIN 3 –	(Not used)
PIN 4 –	Chassis ground pin
PIN 5 –	Signal ground pin
PIN 6 –	(Not used)
PIN 7 –	ABS diagnostic enable
PIN 8 –	TOD diagnostic enable
PIN 9 –	Primary UART
PIN 10 –	(Not used)
PIN 11 –	(Not used)
PIN 12 –	ABS diagnostic or CCM diagnostic enable
PIN 13 –	SIR diagnostic enable
PIN 14 –	(Not used)
PIN 15 –	(Not used)
PIN 16 –	Battery power from vehicle unswitched (4 AMP MAX.)

Malfunction Indicator Lamp (MIL)

The Malfunction Indicator Lamp (MIL) looks the same as the MIL you are already familiar with (“CHECK ENGINE” lamp). However, OBD II requires that it illuminate under a strict set of guidelines. Basically, the MIL is turned on when the PCM detects a DTC that will impact the vehicle’s emissions.

The MIL is under the control of the Diagnostic Executive. The MIL will be turned on if a component or system which has an impact on vehicle emissions indicates a malfunction or fails to pass an emissions–related diagnostic test. It will stay on until the system or component passes the same test, for three consecutive trips, with no emissions–related faults.

Types Of Diagnostic Trouble Codes (DTCs)

The Diagnostic Executive classifies Diagnostic Trouble Codes (DTCs) into certain categories. Each type has different requirements to set the code, and the Diagnostic Executive will only illuminate the Malfunction Indicator Lamp (MIL) for emissions related DTCs. DTCs fall into four categories: A, B, C, and D; only types A and B are emission related The following descriptions define these categories:

TYPE A

Will store the DTC and turn on the MIL (“Check Engine” lamp) on the first trip in which an emission related diagnostic test has run and reported a “test failed” to the Diagnostic Executive.

TYPE B

Will store the DTC and turn on the MIL on the second consecutive trip in which an emission related diagnostic test has run and reported a “test failed” to the Diagnostic Executive. After one failure, the type B DTC is “armed,” or prepared to store a history code and turn on the MIL if a second failure occurs. One passed test will disarm a type B DTC. Some special conditions apply to misfire and fuel trim DTCs. For a type B DTC to store and turn on the MIL, two ignition cycles are required.

TYPE C

Will store the DTC and turn on a “SERVICE” lamp (“Check Trans” lamp) on the first trip that a non emission related diagnostic test has run and reported a “test failed” to the Diagnostic Executive. This type of DTC will be used in future applications.

TYPE D

Will store a DTC but will not turn on the MIL on the first trip that a non emission related diagnostic test has run and reported a “test failed” to the Diagnostic Executive. These codes can be very helpful for vehicle service when the driver may comment about a condition, but the MIL did not turn on.

Clear DTC

NOTE: If you clear the DTC (Diagnostic Trouble Codes) you will not be able to read any codes recorded during the last occurrence.

NOTE: To use the DTC again to identify a problem, you will need to reproduce the fault or the problem. This may require a new test drive or just turning the ignition on (this depends on the nature of the fault).

1. IF you have a Tech 2:
   1. Connect the Tech 2 if it is still not connected GOTHROUGH **Tech 2 OBD II CONNECTION.**
   2. Push “F1: Clear DTC Information” in the Application Menu and answer “Yes” to the question “Do you want to clear DTC’s?”
      a. When a malfunction remains as it is the Tech 2 displays “4L30E CODES NOT CLEARED”. This means that the problem is still there or that the recovery was not done. Please **GOTO DTC CHECK.**
      b. When a malfunction has been repaired and the recovery is done. The Tech 2 displays “4L30E CODES CLEARED”.
2. IF you have no Tech 2:
   To clear the DTC, remove Fuse “PCM” (F13, 30A) for at least 10 seconds.

Downloaded from www.Manualslib.com manuals search engine

DTC Check

1. Diagnostic Trouble Codes (DTC) have been identified by Tech 2.
2. You have written the list of the DTCs. The order of the malfunctions has no meanings for this PCM. Usually only one or two malfunctions should be set for a given problem.
3. Check directly the DTCs you identified. The DTCs are sorted by number. Refer to Diagnostic Trouble Code (DTC) Identification in this section.

PCM Precaution

The PCM can be damaged by:

1. Electrostatic discharge
2. The short circuit of some terminals to voltage or to ground.

Electrostatic Discharge Damage Description:

1. Electronic components used to control systems are often designed to carry very low voltage, and are very susceptible to damage caused by electrostatic discharge. It is possible for less than 100 volts of static electricity to cause damage to some electronic components. By comparison, it takes as much as 4,000 volts for a person to even feel the zap of a static discharge.
2. There are several ways for a person to become statically charged. The most common methods of charging are by friction and induction. An example of charging by friction is a person sliding across a car seat, in which a charge of as much as 25,000 volts can build up. Charging by induction occurs when a person with well insulated shoes stands near a highly charged object and momentarily touches ground. Charges for the same polarity are drained off, leaving the person highly charged with the opposite polarity. Static charges of either type can cause damage, therefore, it is important to use care when handling and testing electronic components.

NOTICE: **To prevent possible electrostatic discharge damage:**

1. Do not touch the PCM connector pins or soldered components on the PCM circuit board.
2. Be sure to follow the guidelines listed below if servicing any of these electronic components:
3. Do not open the replacement part package until it is time to install the part.
4. Avoid touching electrical terminals of the part.
5. Before removing the part from its package, ground the package to a known good ground on the vehicle.
6. Always touch a known good ground before handling the part. This step should be repeated before installing the part if the part has been handled while sliding across the seat, while sitting down from a standing position or while walking some distance.

Information On PCM

1. The Powertrain Control Module (PCM) is located in the center console and is the control center of the electronic transmission control system.
2. The PCM must be maintained at a temperature below 85˚ (185˚F) at all times. This is most essential if the vehicle is put through a paint baking process. The PCM will become inoperative if its temperature exceeds 85˚C (185˚F). Therefore, it is recommended that the PCM be removed or that temporary insulation be placed around the PCM during the time the vehicle is in a paint oven or other high temperature process.
3. The PCM is designed to process the various inputs and then respond by sending the appropriate electrical signals to control transmission upshift, downshift, shift feel and torque converter clutch engagement.
4. The PCM constantly interprets information from the various sensors, and controls the systems that affect transmission and vehicle performance. By analyzing operational problems, the PCM is able to perform a diagnostic function by displaying DTC(s) and aid the technician in making repairs.

Intermittent Conditions

If the Tech 2 displays a diagnostic trouble code as intermittent, or if after a test drive a DTC does not reappear though the detection conditions for this DTC are present, the problem is most likely a faulty electrical connection or loose wiring. Terminals and grounds should always be the prime suspect. Intermittents rarely occur inside sophisticated electronic components such as the PCM.

Use the DTC information to understand which wires and sensors are involved.

When an intermittent problem is encountered, check suspect circuits for:

1. Poor terminal to wire connection.
2. Terminals not fully seated in the connector body (backed out).
3. Improperly formed or damaged terminals.
4. Loose, dirty, or corroded ground connections:
   HINT: Any time you have an intermittent in more than one circuit, check whether the circuits share a common ground connection.
5. Pinched or damaged wires.
6. Electro–Magnetic Interference (EMI):
   HINT: Check that all wires are properly routed away from coil, and generator. Also check for improperly installed electrical options, such as lights, 2–way radios, etc.

Use the F2 SNAPSHOT mode of the Tech 2 to help isolate the cause of an intermittent fault. The snapshot mode will record information before and after the problem occurs. Set the snapshot to “trigger” on the suspect DTC. If you notice the reported symptom during the test drive, trigger the snapshot manually.

Downloaded from www.Manualslib.com manuals search engine

After the snapshot has been triggered, command the Tech 2 to play back the flow of data recorded from each of the various sensors. Signs of an intermittent fault in a sensor circuit are sudden unexplainable jump in data values out of the normal range.

Transmission And PCM Identification

The chart below contains a list of all important information concerning rear axle ratio, Powertrain Control Module (PCM), and transmission identification.

VEHICLE		Rr axle Ratio	PCM	TRANSMISSION		
Type	Engine		ISUZU Parts No.	Calibration Code	Isuzu Part No.	Model Code
Isuzu / Trooper	3.5L V6	4.300	8–09385–189–0 8–09385–199–0	G26	8–96018–507–0	YA

Isuzu Trooper

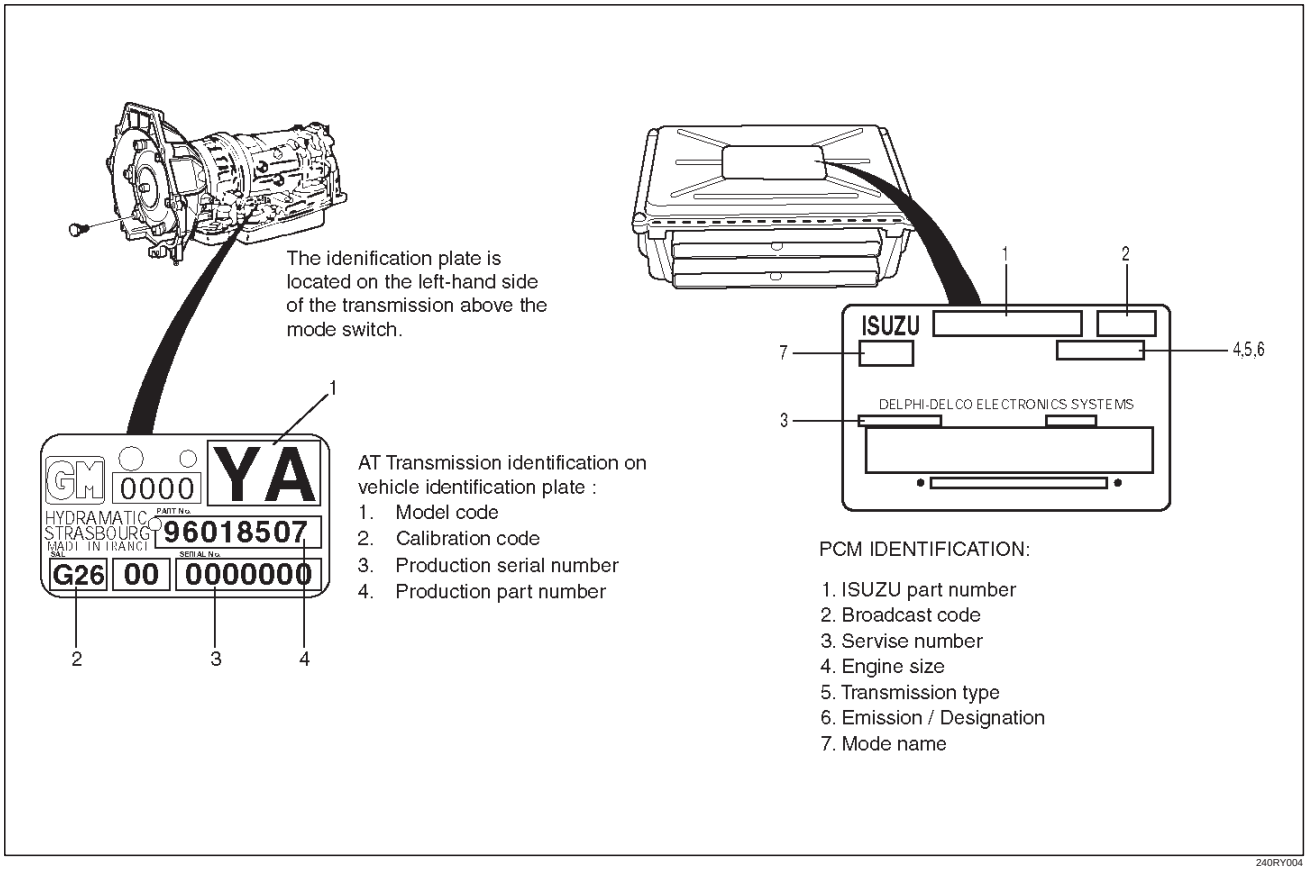

240RY004

Downloaded from www.Manualslib.com manuals search engine

Diagnostic Trouble Code (DTC) Identification

DTC NUMBER	DTC NAME	DTC TYPE	MIL "CHECK ENGINE"	"CHECK TRANS"
P0218	Transmission Fluid Over Temperature	D		
P0705	Transmission Range Switch (Mode Switch) Illegal Position	D		
P0706	Transmission Range Switch (Mode Switch) Performance	D		
P0711	Transmission Fluid Temperature (TFT) Sensor Performance	D		
P0712	Transmission Fluid Temperature (TFT) Sensor Circuit Low Input	D		
P0713	Transmission Fluid Temperature (TFT) Sensor Circuit High Input	D		
P0719	Brake Switch Circuit Low (Stuck ON)	D		
P0722	Automatic Transmission Output Speed Sensor (OSS) Low Input	B	ON	Flash
P0723	Automatic Transmission Output Speed Sensor (OSS) Intermittent	B	ON	Flash
P0724	Brake Switch Circuit High (Stuck OFF)	D		
P0730	Gear Error Without Input Speed	C		Flash
P0742	Torque Converter Clutch (TCC) System Stuck ON	B	ON	Flash
P0748	Pressure Control Solenoid (PCS) (Force Motor) Circuit Electrical	C		Flash
P0751	Shift Solenoid A Performance (Stuck OFF)	B	ON	Flash
P0752	Shift Solenoid A Performance (Stuck ON)	B	ON	Flash
P0753	Shift Solenoid A Electrical	B	ON	Flash
P0756	Shift Solenoid B Performance (Stuck OFF)	B	ON	Flash
P0757	Shift Solenoid B Performance (Stuck ON)	B	ON	Flash
P0758	Shift Solenoid B Electrical	B	ON	Flash
P1850	Brake Band Apply Solenoid Malfunction	D		
P1860	TCC Solenoid Electrical	B	ON	Flash
P1870	Transmission Component Slipping (TCC Stuck OFF)	B	ON	Flash

DTC TYPE	DEFINITION
B	Emission related, turn on MIL (Check Engine) and flashing Check Trans after 2 consecutive trips (Removal to confirmed)
C	Non–emission related, flashing Check Trans on 1st failure
D	Non–emission related, no lamps

NOTE: On the following charts, refer to the Powertrain Control Module (PCM) section for the Wiring System, and the Body and Accessories section for circuit diagram details, parts location, and connector configuration.

Downloaded from www.Manualslib.com manuals search engine

DTC P0218 Transmission Fluid Over Temperature

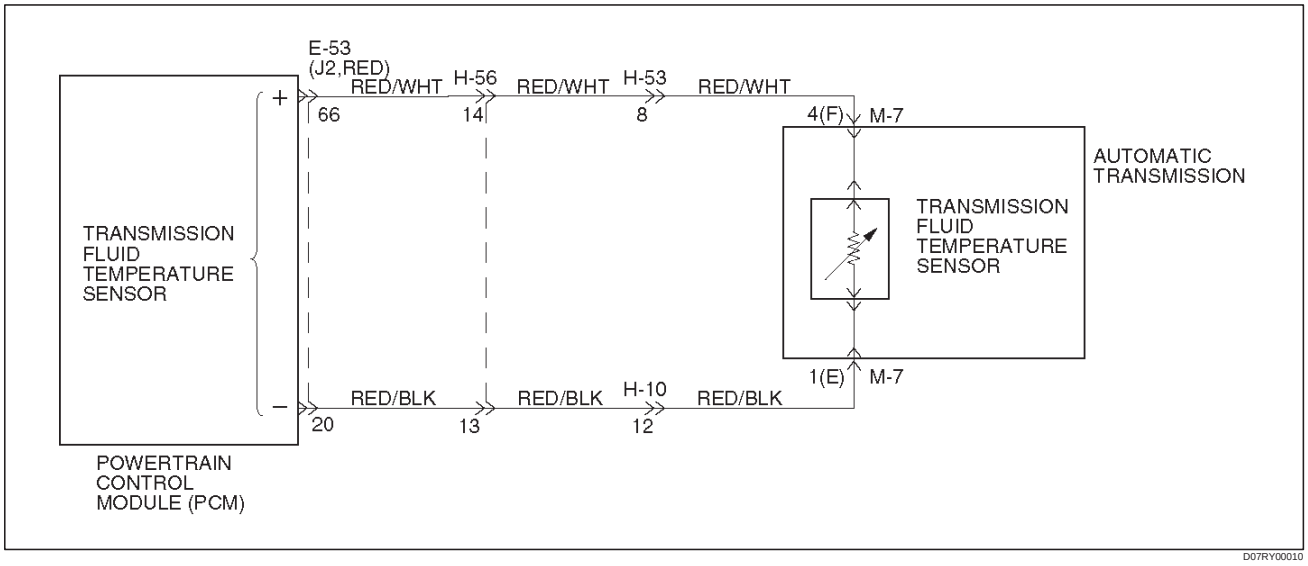

Circuit Description

The Transmission Fluid Temperature (TFT) sensor is a thermister that controls the signal voltage to the PCM. The PCM supplies a 5–volt reference to the sensor on circuit RED/WHT. When the transmission fluid is cold, the sensor resistance is high and the PCM will sense high signal voltage. As the fluid temperature warms to a normal transmission operating temperature of 100˚C (212˚F), the sensor resistance becomes less and the voltage decreases to 1.5 to 2.0 volts.
This DTC detects a high transmission temperature for a long period of time. This is a type “D” DTC.

Conditions For Setting The DTC

- No TFT DTCs P0712 or P0713.
- TFT is greater than 135˚C (275˚F).
- All conditions met for 21 seconds.

Action Taken When The DTC Sets

- Hot mode TCC Shift Pattern.
- The PCM will not illuminate the Malfunction Indicator Lamp (MIL).
- ATF Lamp ON. (TFT is greater than 145˚C (293˚F).)
- Disable E–side TCC OFF request.

Conditions For Clearing The DTC

- The DTC can be cleared from the PCM history by using a scan tool.
- The DTC will be cleared from history when the vehicle has achieved 40 warm–up cycles without a failure reported.
- The PCM will cancel the DTC default actions when the fault no longer exists and the ignition is cycled “off” long enough to power down the PCM.

Diagnostic Aids

- Inspect the wiring for poor electrical connections at the PCM and at the transmission 16–way connectors. Look for possible bent, backed out, deformed, or damaged terminals. Check for weak terminal tension as well.

  Also check for a chafed wire that could short to bare metal or other wiring. Inspect for a broken wire inside the insulation.
- When diagnosing for a possible intermittent short or open condition, move the wiring harness while observing test equipment for a change.
- Check harness routing for a potential short to ground in circuit RED/WHT.
- Scan tool TFT sensor temperature should rise steadily to about 100˚C (212˚F), then stabilize.
- Check for a “skewed” (mis–scaled) sensor by comparing the TFT sensor temperature to the ambient temperature after a vehicle cold soak. A “skewed” sensor can cause delayed garage shifts or TCC complaints.
- Check for a possible torque converter stator problem.
- Verify customer driving habits, trailer towing, etc.

Test Description

The numbers below refer to the step numbers on the diagnostic chart.

3. This test checks for a “skewed” sensor or shorted circuit.
4. This test simulates a TFT DTC P0713.

Downloaded from www.Manualslib.com manuals search engine

DTC P0218 Transmission Fluid Over Temperature

Step	Action	Yes	No
1	Were you sent here from the “Powertrain On–Board Diagnostic (OBD) System Check”?	Go to Step 2	Go to OBD System Check Refer to Driveability and Emissions in Engine section
2	Perform the following checks: ● Check for possible engine system problems. ● Transmission fluid checking procedure. Refer to Checking Transmission Fluid Level and Condition in Automatic Transmission (4L30–E) Section. Were the checks performed?	Go to Step 3	—
3	1. Install the scan tool. 2. With the engine “off”, turn the ignition switch “on”. NOTE: Before clearing DTC(s), use the scan tool to record “Failure Records” for reference, as data will be lost when “Clear Info” function is used. 3. Record the DTC “Failure Records”. Is the TFT sensor signal voltage less than 0.33 volts?	Go to Step 4	Go to Diagnostic Aids
4	1. Turn the ignition “off”. 2. Disconnect the transmission 16–way connector H–56 (additional DTCs may set). Is the TFT sensor signal voltage greater than 4.92 volts?	Go to Internal Wiring Harness Check.	Go to Step 5
5	Inspect/repair circuit RED/WHT for a short to ground. Was a problem found?	Go to Step 7	Go to Step 6
6	1. Inspect the PCM for poor connections. 2. Replace the PCM if no poor connections were found. Is the replacement complete?	Go to Step 7	—
7	1. After the repair is complete, use the scan tool to select “DTC”, then “Clear Info” function and ensure the following conditions are met: TFT is less than 125˚C (257˚F) for at least 10 seconds. 2. Review the scan tool “DTC Info”. Has the last test failed or is the current DTC displayed?	Begin diagnosis again Go to Step 1	Repair verified Exit DTC table

Downloaded from www.Manualslib.com manuals search engine

DTC P0705 Transmission Range Switch (Mode Switch) Illegal Position

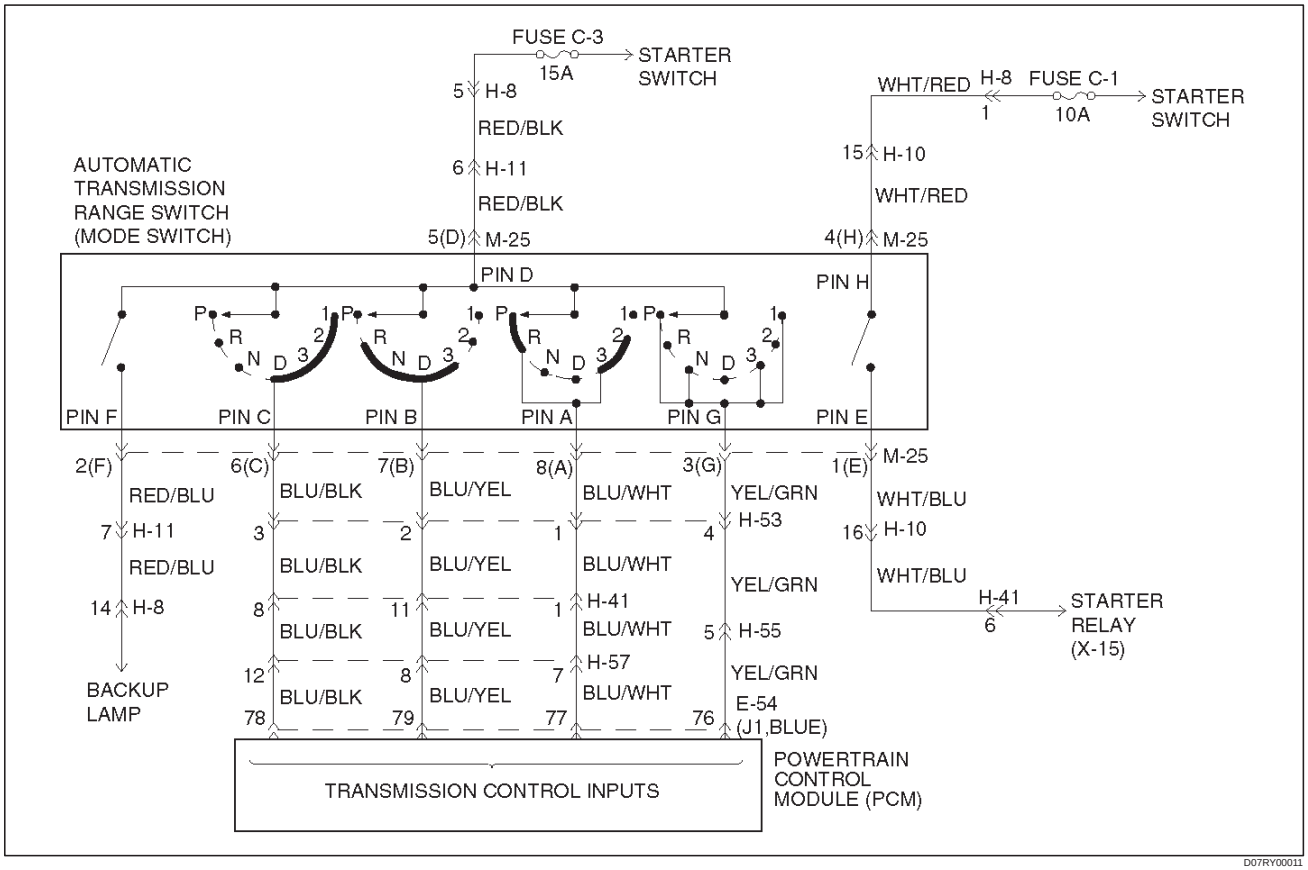

Circuit Description

- The range switch supplies the Powertrain Control Module (PCM) with information regarding the selector lever position: P, R, N, D 3, 2 or L. The selector lever position is indicated by the state of four ON/OFF contacts. The range switch is located on one side of the transmission. It is on the transmission manual shaft and is fixed to the main case.
- The range switch is also used to provide the information P or N to the engine crank wiring. The engine can be cranked only if connector M–25 terminal 4(H) is connected to terminal 1(E) which is connected to ground.
- The range switch is also used to provide the backup lamp power in reverse. This is why the range switch is supplied through a 15A fuse (C–3). This fuse can burn due to a short circuit in the backup lamp.

This DTC detects when a fuse is open or the range switch circuit does not work. This is a type “D” DTC.

Conditions For Setting The DTC

- Range switch illegal positions met for 5 seconds.

Action Taken When The DTC Sets

- Default to D position.
- Inhibit torque management.
- Maximum line pressure.
- Turn force motor OFF.
- The PCM will not illuminate the Malfunction Indicator Lamp (MIL).

Conditions For Clearing The DTC

- The DTC can be cleared from the PCM history by using a scan tool.
- The DTC will be cleared from history when the vehicle has achieved 40 warmup cycles without a failure reported.
- The PCM will cancel the DTC default actions when the fault no longer exists and the ignition is cycled “off” long enough to power down the PCM.

Diagnostic Aids

- Refer to accompanying chart for the normal range signals and the illegal combinations.
- Inspect the wiring for poor electrical connections at the PCM and at the transmission 8–way connector. Look for possible bent, backed out, deformed or damaged terminals. Check for weak terminal tension as well. Also check for a chafed wire that could short to bare metal or other wiring. Inspect for a broken wire inside the insulation.
- When diagnosing for a possible intermittent short or open condition, move the wiring harness while observing test equipment for a change.
- Refer to the “Range Switch Logic Table” or “Functional Test Procedure” for further information.

Downloaded from www.Manualslib.com manuals search engine

Test Description

The numbers below refer to the step numbers on the diagnostic chart:

3. This test checks the indicated range signal to the manual valve actually selected.
6. This test checks for continuity between each selected range switch connector terminals.

Range Switch Logic Table

Range Position	Range Switch Pin			
	A	B	C	P(G)
Park	ON	OFF	OFF	ON
Reverse	ON	ON	OFF	OFF
Neutral	OFF	ON	OFF	ON
D4	OFF	ON	ON	OFF
D3	ON	ON	ON	ON
2	ON	OFF	ON	OFF
L	OFF	OFF	ON	ON
Illegal	OFF	OFF	OFF	OFF
Illegal	OFF	OFF	OFF	ON

Downloaded from www.Manualslib.com manuals search engine

DTC P0705 Transmission Range Switch (Mode Switch) Illegal Position

Step	Action	Yes	No
1	Were you sent here from the “Powertrain On–Board Diagnostic (OBD) System Check”?	Go to Step 2	Go to OBD System Check Refer to Driveability and Emissions in Engine section
2	Perform the following checks: ● The transmission linkage from the select lever to the manual valve is adjusted properly. ● Diagnostic circuit check. Were the checks performed?	Go to Step 3	—
3	1. Install the scan tool. 2. With the engine “off”, turn the ignition switch “on”. NOTE: Before clearing DTC(s), use the scan tool to record “Freeze Frame” and “Failure Records” for reference, as data will be lost when the “Clear Info” function is used. 3. Record the DTC “Freeze Frame” and “Failure Records”. 4. Select each transmission range: D1, D2, D3, D4, N, R, and P. Does each selected transmission range match the scan tool “Range Switch” display?	Go to Diagnostic Aids	Go to Step 4
4	Are all range switch pin displays incorrect?	Go to Step 5	Go to Step 6
5	Check fuse and wiring to the 8–way connector terminal 5(D) for opens. Refer to Mode Switch in Automatic Transmission (4L30–E) section. If no problem was found, replace the range switch. Is the replacement complete?	Go to Step 9	—
6	1. Disconnect the 8–way range switch connector. 2. Using ohmmeter, check continuity between terminal 5(D) and respectively terminals 3(G), 6(C), 7(B) and 8(A) of the 8–way range switch connector. 3. Move shift selector lever through all positions and compare results with “Range Switch Logic Table”. Is one range switch pin display incorrect?	Go to Step 7	Go to Step 8
7	Check the affected wiring and connector, and repair. Is the repair complete?	Go to Step 9	—
8	Check the Powertrain Control Module (PCM) connectors for poor connection. If no problem was found, replace the PCM. Is the replacement complete?	Go to Step 9	—
9	1. After the repair is complete, use the scan tool to select “DTC”, then “Clear Info” function and road test the vehicle. 2. Review the scan tool “DTC Info”. Has the last test failed or is the current DTC displayed?	Begin diagnosis again Go to Step 1	Repair verified Exit DTC table

Downloaded from www.Manualslib.com manuals search engine

DTC P0706 Transmission Range Switch (Mode Switch) Performance

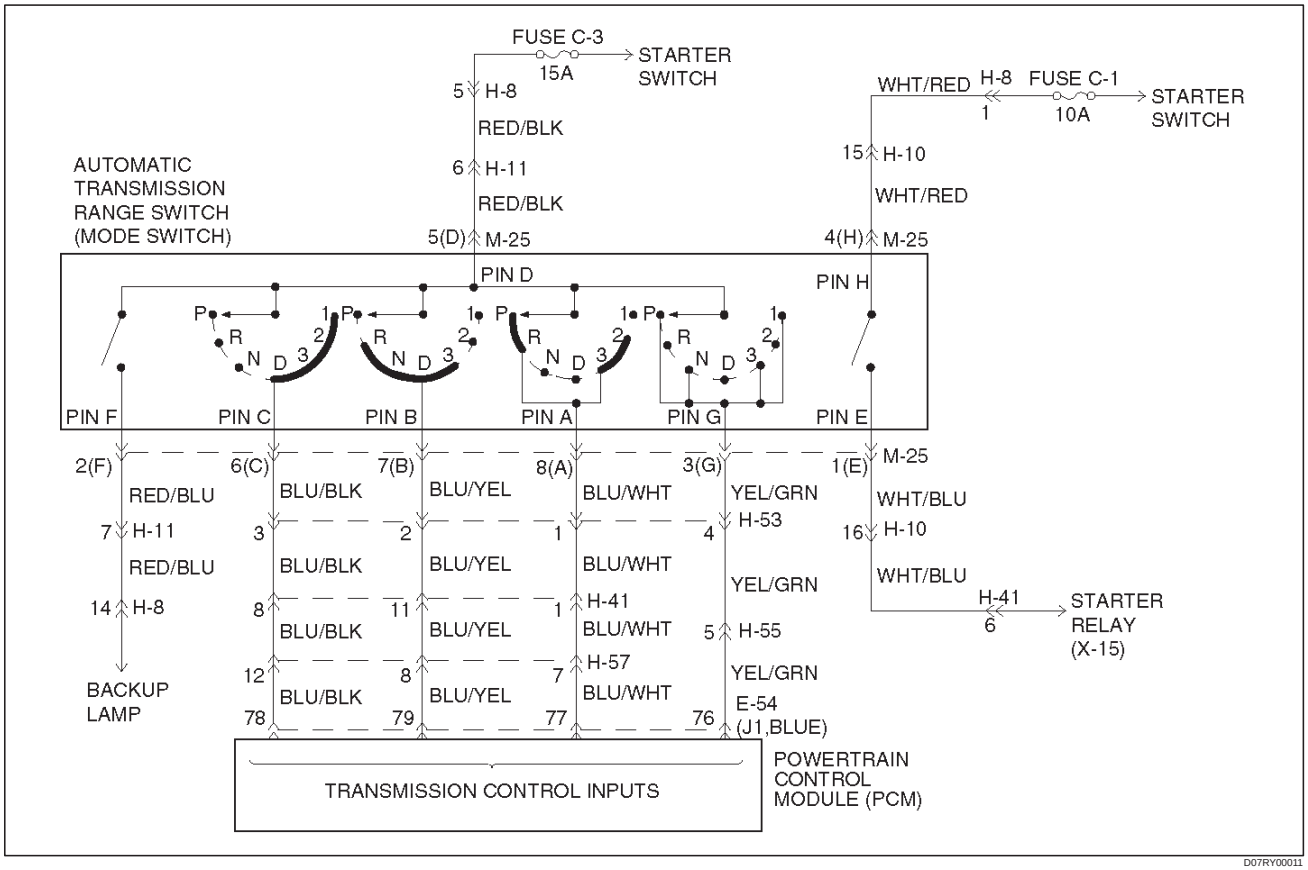

Circuit Description

- The range switch supplies the Powertrain Control Module (PCM) with information regarding the selector lever position: P, R, N, D, 3, 2 or L. The selector lever position is indicated by the state of four ON/OFF contacts. The range switch is located on one side of the transmission. It is on the transmission manual shaft and is fixed to the main case.
- The range switch is also used to provide the information P or N to the engine crank wiring. The engine can be cranked only if connector M–25 terminal 4(H) is connected to terminal 1(E) which is connected to ground.
- The range switch is also used to provide the backup lamp power in reverse. This is why the mode switch is supplied through a 15A fuse (C–3). This fuse can burn due to a shot circuit in the backup lamp.
- This DTC detects an invalid state of the range switch or the range switch circuit by deciphering the range switch inputs. This is a type “D” DTC.

Conditions For Setting The DTC

This DTC will set if any of the following conditions occurs:

Condition 1 (“R” bad position):

- Engine is running.
- No output speed DTCP0722, P0723.
- Output speed greater than 3,200 RPM.
- Range switch indicates “R”.
- All conditions met for 4 seconds.

Condition 2 (“P” or “N” bad position):

- Engine is running.
- No TPS codes.
- Engine speed is less than 3,000 RPM.
- TP angle is greater than 20%.
- Range switch indicates “P” or “N”.
- All conditions met for 4 seconds.

Action Taken When The DTC Sets

- Default to “D” position.
- The PCM will not illuminate the Malfunction Indicator Lamp (MIL).

Conditions For Clearing The DTC

- The DTC can be cleared from the PCM history by using a scan tool.
- The DTC will be cleared from history when the vehicle has achieved 40 warmup cycles without a failure reported.
- The PCM will cancel the DTC default actions when the fault no longer exists and the ignition is cycled “off” long enough to power down the PCM.

Downloaded from www.Manualslib.com manuals search engine

Diagnostic Aids

- Refer to the accompanying chart for the normal range signals and the illegal combinations.
- Inspect the wiring for poor electrical connections at the PCM and at the transmission 8–way connector. Look for possible bent, backed out, deformed or damaged terminals. Check for weak terminal tension as well. Also check for a chafed wire that could short to bare metal or other wiring. Inspect for a broken wire inside the insulation.
- When diagnosing for a possible intermittent short or open condition, move the wiring harness while observing test equipment for a change.
- Refer to the “Range Switch Logic Table” or “Functional Test Procedure” for further information.

Test Description

The numbers below refer to the step numbers on the diagnostic chart:

3. This test checks the indicated range signal to the manual valve actually selected.
6. This test checks for continuity between each selected range switch connector terminals.

Range Switch Logic Table

Range Position	Range Switch Pin			
	A	B	C	P(G)
Park	ON	OFF	OFF	ON
Reverse	ON	ON	OFF	OFF
Neutral	OFF	ON	OFF	ON
D4	OFF	ON	ON	OFF
D3	ON	ON	ON	ON
2	ON	OFF	ON	OFF
L	OFF	OFF	ON	ON
Illegal	OFF	OFF	OFF	OFF
Illegal	OFF	OFF	OFF	ON

Downloaded from www.Manualslib.com manuals search engine

DTC P0706 Transmission Range Switch (Mode Switch) Performance

Step	Action	Yes	No
1	Were you sent here from the “Powertrain On–Board Diagnostic (OBD) System Check”?	Go to Step 2	Go to OBD System Check Refer to Driveability and Emissions in Engine section
2	Perform the following checks: ● The transmission linkage from the select lever to the manual valve is adjusted properly. ● Diagnostic circuit check. Were the checks performed?	Go to Step 3	—
3	1. Install the scan tool. 2. With the engine “off”, turn the ignition switch “on”. NOTE: Before clearing DTC(s), use the scan tool to record “Freeze Frame” and “Failure Records” for reference, as data will be lost when the “Clear Info” function is used. 3. Record the DTC “Freeze Frame” and “Failure Records”. 4. Select each transmission range: D1, D2, D3, D4, N, R, and P. Does each selected transmission range match the scan tool “Range Switch” display?	Go to Diagnostic Aids	Go to Step 4
4	Are all range switch pin displays incorrect?	Go to Step 5	Go to Step 6
5	Check fuse and wiring to the 8–way connector terminal 5(D) for opens. Refer to Mode Switch in Automatic Transmission (4L30–E) section. If no problem was found, replace the range switch. Is the replacement complete?	Go to Step 9	—
6	1. Disconnect the 8–way range switch connector. 2. Using ohmmeter, check continuity between terminal 5(D) and respectively terminals 3(G), 6(C), 7(B) and 8(A) of the 8–way range switch connector. 3. Move shift selector lever through all positions and compare results with “Range Switch Logic Table”. Is one range switch pin display incorrect?	Go to Step 7	Go to Step 8
7	Check the affected wiring and connector, and repair. Is the repair complete?	Go to Step 9	—
8	Check the Powertrain Control Module (PCM) connectors for poor connection. If no problem was found, replace the PCM. Is the replacement complete?	Go to Step 9	—
9	1. After the repair is complete, use the scan tool to select “DTC”, then “Clear Info” function and road test the vehicle. 2. Review the scan tool “DTC Info”. Has the last test failed or is the current DTC displayed?	Begin diagnosis again Go to Step 1	Repair verified Exit DTC table

Downloaded from www.Manualslib.com manuals search engine

DTC P0711 Transmission Fluid Temperature (TFT) Sensor Performance

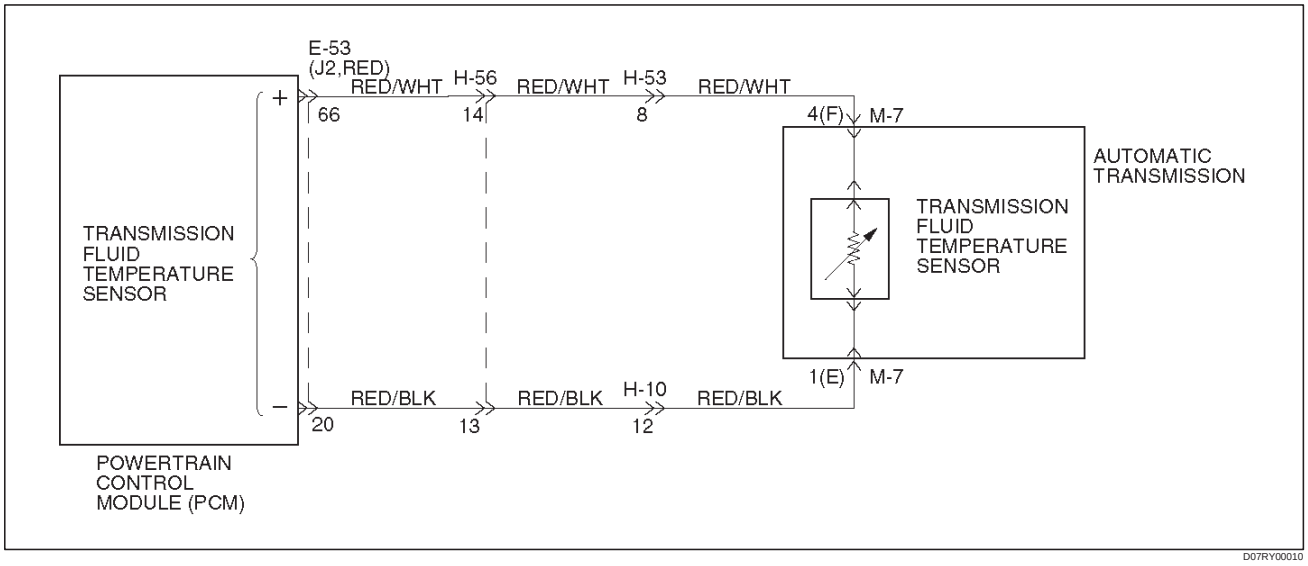

Circuit Description

The TFT sensor is a thermister that controls the signal voltage to the PCM. The PCM supplies a 5–volt reference signal to the sensor on circuit RED/WHT. When the transmission fluid is cold, the sensor resistance is high and the PCM detects high signal voltage. As the transmission fluid temperature increases to normal operating temperature of 100˚C (212˚F), the sensor resistance becomes less and the voltage decreases to 1.5 to 2 volts.

When the PCM detects a TFT sensor that remains at the startup value, or a sensor that has a change delta of greater than 20˚C (36˚F) less than 1 second, DTC P0711 sets. DTC P0711 is a type D.

Conditions For Setting The DTC

- No VSS DTCs P0722 or P0723.
- No Transmission Component Slipping DTC P1870.
- Engine is running.
- TFT is between 20 A/D (Analog/Digital) counts and 248 A/D counts.
- TFT is between –40˚C (–40˚F) and +21˚C (69.8˚F) at engine startup.
- Engine coolant temperature is greater than 70˚C (150˚F).
- Engine coolant temperature has changed by greater than 50˚C (90˚F) since engine startup.
- Vehicle speed has been greater than 5 mph for greater than 410 seconds since engine startup (cumulative timer).
- TCC slip speed has been greater than 120 rpm for greater than 410 seconds since engine startup (cumulative timer).
- Battery voltage is between 10 and 16 volts.

All of the above is true and either of the following occurs:

- If the sensor is stuck, the TFT has not changed for greater than 2 counts (from startup temperature) for greater than 410 seconds.
- If the sensor shows an unrealistic change, the TFT exhibits a change delta of greater than 20˚C (36˚F), greater than 14 times in 7 seconds.

Action Taken When The DTC Sets

- Transmission default temperature will be:

  80˚C (176˚F) if engine temperature code is set.

  100˚C (212˚F) if engine temperature is warm.

  80˚C (176˚F) if engine run time is greater than 5 minutes.

  21˚C (69.8˚F) if engine run time is less than 5 minutes.
- The PCM will not illuminate the Malfunction Indicator Lamp (MIL).

Conditions For Clearing The DTC

- The DTC can be cleared from the PCM history by using a scan tool.
- The DTC will be cleared from history when the vehicle has achieved 40 warmup cycles without a failure reported.
- The PCM will cancel the DTC default actions when the fault no longer exists and the ignition is cycled “off” long enough to power down the PCM.

Diagnostic Aids

- Inspect the wiring for poor electrical connection at the PCM. Inspect the wiring for poor electrical connections at the transmission 16–way connectors. Look for the following conditions:
  a. A bent terminal
  b. A backed out terminal
  c. A damaged terminal
  d. Poor terminal tension
  e. A chafed wire
  f. A broken wire inside the insulation

Downloaded from www.Manualslib.com manuals search engine

- When diagnosing for an intermittent short or open connection, move the wiring harness while watching the test equipment for a change.
- First diagnose and clear any engine DTCs or TP Sensor codes. Then inspect for any transmission DTCs that may have reset.

Test Description

The number below refers to the step number on the diagnostic chart:

3. This test checks PCM and associated wiring up to the 16–way connectors. If the voltage increases to match chart the problem is isolated to the transmission wiring.

Resistance Chart

˚C	˚F	Resistance (kμ)
–40	–40	672
0	32	65
20	68	25
80	176	2.5
120	248	0.78
150	304	0.37

DTC P0711 Transmission Fluid Temperature (TFT) Sensor Performance

Step	Action	Yes	No
1	Was the Powertrain On–Board Diagnostic (OBD) System Check performed?	Go to Step 2	Go to OBD System Check Refer to Driveability and Emissions in Engine section
2	Perform the transmission fluid checking procedure. Refer to Checking Transmission Fluid Level and Condition in Automatic Transmission (4L30–E) section. Did you perform the fluid checking procedure?	Go to Step 3	Go to Checking Transmission Fluid Level and Condition in Automatic Transmission (4L30–E) section
3	1. Install the scan tool. 2. With the engine “off”, turn the ignition switch to the “on” position. NOTE: Before clearing DTCs, use the scan tool in order to record the Freeze Frame and Failure Records for reference. The Clear Info function will erase the data. 3. Record the DTC Freeze Frame and Failure Records. 4. Select TFT on the scan tool. 5. While observing the scan tool display, move or massage the engine wiring harness from PCM connectors J2–66 and J2–20 to the transmission 16–way connectors. Does the TFT change by more than ±20˚C (36˚F)?	Go to Step 6	Go to Step 4
4	1. Turn the ignition “off”. 2. Disconnect the transmission 16–way connector H–56. 3. Install Jumper Harness on the transmission side of the 16–way connector H–56. 4. Using the J39200 DVOM and J35616 Connector Test Adapter Kit, connect the DVOM leads from terminal M7–4(F) to terminal M7–1(E). 5. Set the DVOM on MIN/MAX to measure resistance. 6. Record the TFT sensor resistance. 7. Move or massage the automatic transmission wiring harness assembly from the 16–way connector H–56 to the TFT sensor connector. Does the DVOM MAX display a resistance greater than the value recorded in Action item 6 of this step?	Go to Step 7	Go to Step 5
5	Does the DVOM MIN display a resistance less than the value recorded in Action item 6 of step 4?	Go to Step 8	—

Downloaded from www.Manualslib.com manuals search engine

DTC P0711 Transmission Fluid Temperature (TFT) Sensor Performance (Cont'd)

Step	Action	Yes	No
6	Inspect circuit RED/WHT and RED/BLK of the engine wiring harness for an intermittent open or short condition. Repair the circuits if necessary. Did you find a problem?	Go to Step 12	Go to Step 11
7	Inspect the automatic transmission wiring harness assembly for an intermittent open in circuits RED/WHT and RED/BLK. Did you find a problem?	Go to Step 9	Go to Step 10
8	Inspect the automatic transmission wiring harness assembly for an intermittent shorted condition in circuits RED/WHT and RED/BLK. Did you find a problem?	Go to Step 9	Go to Step 10
9	Replace the automatic transmission wiring harness assembly. Is the replacement complete?	Go to Step 12	—
10	Replace TFT Sensor. Refer to Transmission Oil Temperature Sensor (Main Case) in Automatic Transmission (4L30–E) section. Is the replacement complete?	Go to Step 12	—
11	Replace the PCM. Refer to Powertrain Control Module (PCM) in Automatic Transmission (4L30–E) section. Is the replacement complete?	Go to Step 12	—
12	In order to verify your repair, perform the following procedure. 1. Select DTC. 2. Select Clear Info. 3. Drive the vehicle and ensure the following conditions are met: ● The TFT changes by more than 2.25˚C (4.05˚F) for 11 seconds since startup. ● The TFT does not change by more than 20˚C (36˚F) within 0.200 second for a period of at least 11 seconds. 4. Select Specific DTC. 5. Enter DTC P0711. Has the test run and passed?	System OK	Begin the diagnosis again Go to Step 1

Downloaded from www.Manualslib.com manuals search engine

DTC P0712 Transmission Fluid Temperature (TFT) Sensor Circuit Low Input

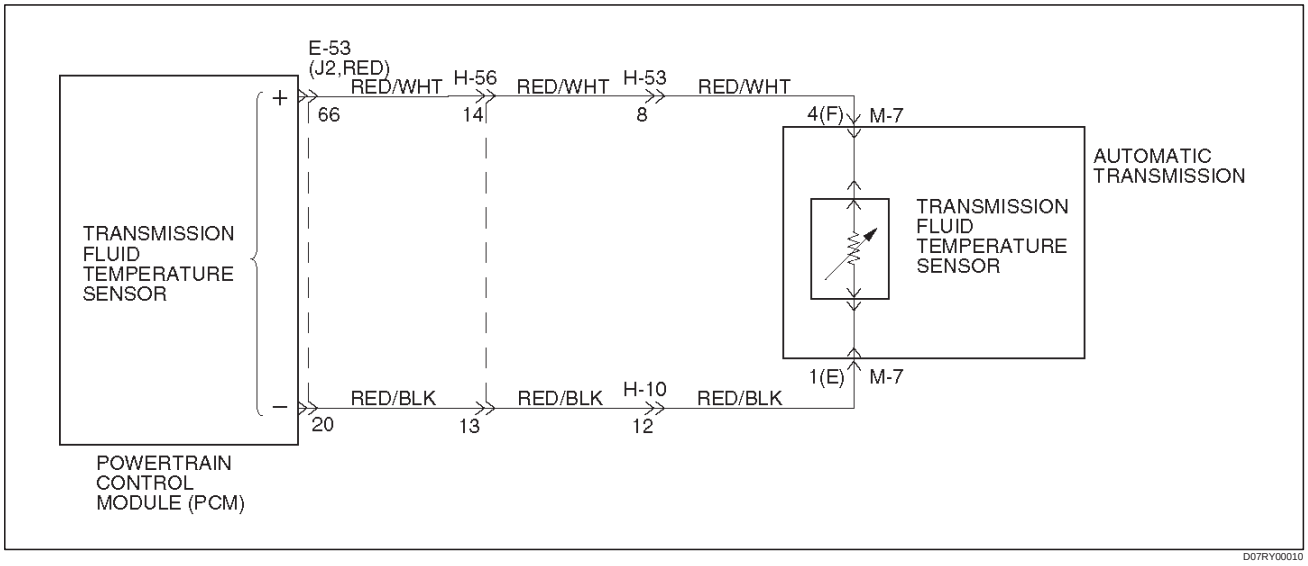

Circuit Description

The TFT sensor is a thermister that controls the signal voltage to the PCM. The PCM supplies a 5–volt reference signal to the sensor on circuit RED/WHT. When the transmission fluid is cold, the sensor resistance is high. The PCM detects high signal voltage. As the transmission fluid temperature increases to the normal operating temperature of 100˚C (212˚F), the sensor resistance becomes less and the voltage decreases to 1.5 to 2 volts. With transmission fluid over temperature and DTC P0218 also set, check the transmission cooling system.

This DTC detects a continuous short to ground in the TFT signal circuit or the TFT sensor. This is a type “D” DTC.

Conditions For Setting The DTC

- Battery voltage is between 10 and 16 volts.
- Ignition is “on”.
- TFT sensor indicating a voltage less than 0.4 volts.
- All conditions met for 20 seconds.

Action Taken When The DTC Sets

- Transmission default temperature will be:

  80˚C (176˚F) if engine temperature code is set.

  100˚C (212˚F) if engine temperature is warm.

  80˚C (176˚F) if engine run time is greater than 5 minutes.

  21˚C (69.8˚F) if engine run time is less than 5 minutes.
- The PCM will not illuminate the Malfunction Indicator Lamp (MIL).

Conditions For Clearing The DTC

- The DTC can be cleared from the PCM history by using a scan tool.
- The DTC will be cleared from history when the vehicle has achieved 40 warmup cycles without a failure reported.
- The PCM will cancel the DTC default actions when the fault no longer exists and the ignition is cycled “off” long enough to power down the PCM.

Diagnostic Aids

- Check harness routing for a potential short to ground in circuit RED/BLK. Scan tool TFT display should rise steadily to about 100˚C (212˚F), then stabilize.
- Inspect the wiring for poor electrical connection at the PCM and at the transmission 16–way connectors. Look for possible bent, backed out, deformed or damaged terminals. Check for weak terminal tension as well. Also check for a chafed wire that could short to bare metal or other wiring. Inspect for a broken wire inside the insulation.
- When diagnosing for a possible intermittent short or open condition, move the wiring harness while observing test equipment for a change.
- The temperature to resistance value scale may be used to test the TFT sensor at the various temperature levels to evaluate the possibility of a “skewed” (mis–scaled) sensor.

  A “skewed” sensor could result in delayed garage shifts or TCC complaints.
- Verify customer driving habits, trailer towing, etc.

Test Description

The numbers below refer to the step numbers on the diagnostic chart:

3. This test checks for a short to ground or a “skewed” sensor.
4. This test checks for an internal fault within the transmission by creating an open.

Downloaded from www.Manualslib.com manuals search engine

Resistance Chart

˚C	˚F	Resistance (kμ)
–40	–40	672
0	32	65
20	68	25
80	176	2.5
120	248	0.78
150	304	0.37

DTC P0712 Transmission Fluid Temperature (TFT) Sensor Circuit Low Input

Step	Action	Yes	No
1	Were you sent here from the “Powertrain On–Board Diagnostic (OBD) System Check”?	Go to Step 2	Go to OBD System Check Refer to Driveability and Emissions in Engine section
2	Perform the transmission fluid checking procedure. Refer to Checking Transmission Fluid Level and Condition in Automatic Transmission (4L30–E) section. Was the fluid checking procedure performed?	Go to Step 3	Refer to Checking Transmission Fluid Level and Condition in Automatic Transmission (4L30–E) section
3	1. Install the scan tool. 2. With the engine “off”, turn the ignition switch “on”. NOTE: Before clearing DTC(s), use the scan tool to record “Freeze Frame” and “Failure Records” for reference, as data will be lost when the “Clear Info” function is used. 3. Record the DTC “Freeze Frame” and “Failure Records”. Does the scan tool display a TFT sensor signal voltage less than 0.4 volts?	Go to Step 4	Go to Diagnostic Aids
4	1. Turn the ignition “off”. 2. Disconnect the transmission 16–way connector H–56. 3. Turn the ignition “on”. Does the TFT signal voltage change to match the voltage 4.92 volts?	Go to Step 5	Go to Step 10
5	Using the J39200 DVOM, measure the resistance between terminals M7–4(F) and M7–1(E). Is the resistance within specifications? (See Resistance Chart.)	Go to Diagnostic Aids	Go to Step 6
6	1. Disconnect the transmission 7–way connector M–7. 2. Using the J39200 DVOM, measure the resistance between terminals M7–4(F) and M7–1(E). Is the resistance within specifications? (See Resistance Chart.)	Go to Diagnostic Aids	Go to Step 7
7	1. Remove the transmission oil pan. Refer to Transmission Oil Temperature Sensor (Main Case) in Automatic Transmission (4L30–E) section. 2. Check the internal wiring harness for a short to ground. Was a problem found?	Go to Step 9	Go to Step 8

Downloaded from www.Manualslib.com manuals search engine

DTC P0712 Transmission Fluid Temperature (TFT) Sensor Circuit Low Input (Cont'd)

Step	Action	Yes	No
8	1. Disconnect the internal wiring harness at the TFT sensor. 2. Measure the resistance of the TFT sensor. Is the resistance within specifications? (See Resistance Chart.)	Go to Diagnostic Aids	Go to Step 9
9	Replace the TFT Sensor. Is the replacement complete?	Go to Step 13	—
10	Check circuit RED/WHT for a short to ground. Was a problem found?	Go to Step 13	Go to Step 11
11	Check the PCM for faulty connections. Was a problem found?	Go to Step 13	Go to Step 12
12	Replace the PCM. Refer to Powertrain Control Module (PCM) in Automatic Transmission (4L30–E) section. Is the replacement complete?	Go to Step 13	—
13	1. After the repair is complete, use the scan tool to select "DTC", then "Clear Info" function and ensure the following conditions are met: TFT sensor indicates a voltage greater than 0.33 volts for 2 seconds. 2. Review the scan tool "DTC info". Has the last test failed or is the current DTC displayed?	Begin diagnosis again Go to Step 1	Repair verified Exit DTC table

Downloaded from www.Manualslib.com manuals search engine

DTC P0713 Transmission Fluid Temperature (TFT) Sensor Circuit High Input

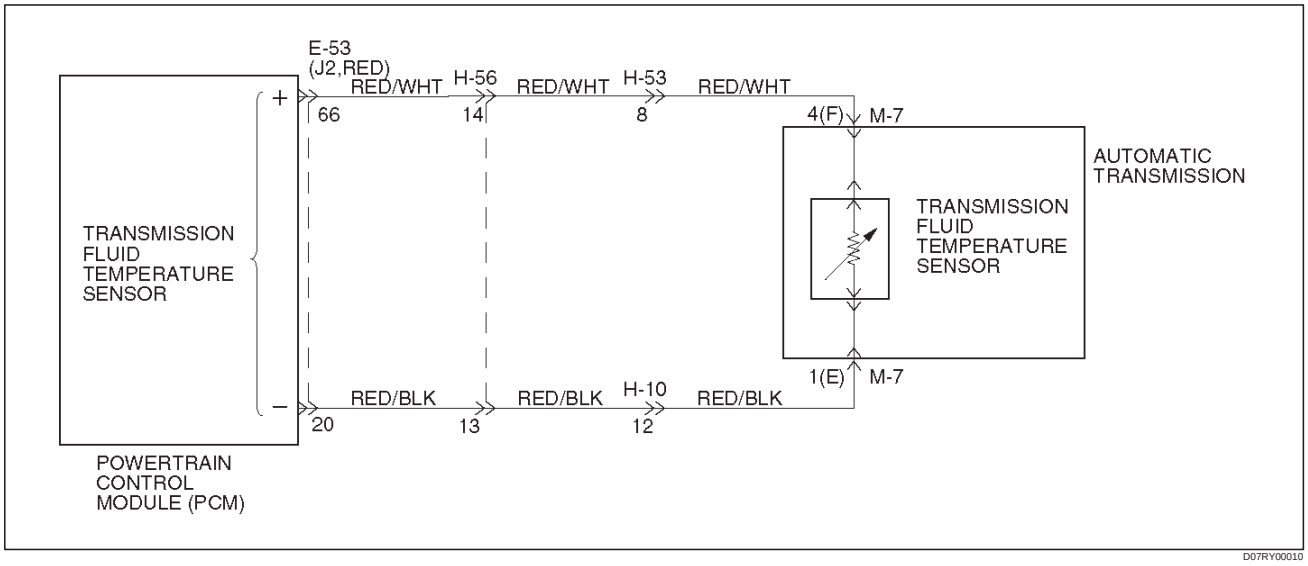

Circuit Description

The TFT sensor is a thermistor that controls the signal voltage to the PCM. The PCM supplies a 5–volt reference signal to the sensor on circuit RED/WHT. When the transmission fluid is cold, the sensor resistance is high and the PCM will sense high signal voltage. As the transmission fluid temperature warms to the normal operating temperature of 100˚C (212˚F), the sensor resistance becomes less and the voltage decreases to about 1.5 to 2 volts.

This DTC detects a continuous open or short to power in the TFT signal circuit or the TFT sensor. This is a type “D” DTC.

Conditions For Setting The DTC

- Battery voltage is between 10 and 16 volts.
- Ignition is “on”.
- TFT sensor indicating a voltage greater than 4.86 volts.
- All conditions met for 20 seconds.

Action Taken When The DTC Sets

- Transmission default temperature will be:

  80˚C (176˚F) if engine temperature code is set.

  100˚C (212˚F) if engine temperature is warm.

  80˚C (176˚F) if engine run time is greater than 5 minutes.

  21˚C (69.8˚F) if engine run time is less than 5 minutes.
- The PCM will not illuminate the Malfunction Indicator Lamp (MIL).

Conditions For Clearing The DTC

- The DTC can be cleared from the PCM history by using a scan tool.
- The DTC will be cleared from history when the vehicle has achieved 40 warmup cycles without a failure reported.
- The PCM will cancel the DTC default actions when the fault no longer exists and the ignition is cycled “off” long enough to power down the PCM.

Diagnostic Aids

- Inspect the wiring for poor electrical connection at the PCM and at the transmission 16–way connectors. Look for possible bent, backed out, deformed or damaged terminals. Check for weak terminal tension as well. Also check for a chafed wire that could short to bare metal or other wiring. Inspect for a broken wire inside the insulation.
- When diagnosing for a possible intermittent short or open condition, move the wiring harness while observing test equipment for a change.
- Scan tool displays transmission fluid temperature in degrees. After transmission is operating, the temperature should rise steadily to about 100˚C (212˚F), then stabilize.
- The temperature to resistance value scale may be used to check the TFT sensor at the various temperature levels to evaluate the possibility of a “skewed” (mis–scaled) sensor.

  A “skewed” sensor could result in hard shifts or TCC complaints.

Test Description

The numbers below refer to the step numbers on the diagnostic chart:

3. This check verifies problem in the TFT sensor circuit.
4. This test simulates a TFT sensor DTC P0712. If the PCM recognizes the low signal voltage (high temperature), and the scan tool displays 146˚C (295˚F) or greater, the PCM and wiring are OK.

Downloaded from www.Manualslib.com manuals search engine

5. This test checks the TFT sensor and internal wiring harness.

Resistance Chart

˚C	˚F	Resistance (kμ)
–40	–40	672
0	32	65
20	68	25
80	176	2.5
120	248	0.78
150	304	0.37

DTC P0713 Transmission Fluid Temperature (TFT) Sensor Circuit High Input

Step	Action	Yes	No
1	Were you sent here from the “Powertrain On–Board Diagnostic (OBD) System Check”?	Go to Step 2	Go to OBD System Check Refer to Driveability and Emission in Engine section
2	Perform the transmission fluid checking procedure. Refer to Checking Transmission Fluid Level and Condition in Automatic Transmission (4L30–E) section. Was the fluid checking procedure performed?	Go to Step 3	Refer to Checking Transmission Fluid Level and Condition in Automatic Transmission (4L30–E) section
3	1. Install the scan tool. 2. With the engine “off”, turn the ignition switch “on”. NOTE: Before clearing DTC(s), use the scan tool to record “Freeze Frame” and “Failure Records” for reference, as data will be lost when the “Clear Info” function is used. 3. Record the DTC “Freeze Frame” and “Failure Records”. Does the scan tool display a TFT sensor signal voltage greater than 4.86 volts?	Go to Step 4	Go to Diagnostic Aids
4	1. Turn the ignition “off”. 2. Disconnect the transmission 16–way connector H–56. 3. Install a fused jumper wire from terminal M7–4(F) and M7–1(E) on the engine harness. 4. Turn the ignition “on”. Does the TFT signal voltage drop to less than 0.4 volts?	Go to Step 5	Go to Step 10
5	1. Turn the ignition “off”. 2. Using the J39200 DVOM, measure the resistance between terminals M7–4(F) and M7–1(E). Is the resistance within specifications? (See Resistance Chart.)	Go to Diagnostic Aids	Go to Step 6
6	1. Disconnect the transmission 7–way connector M–7. 2. Using the J39200 DVOM, measure the resistance between terminals M7–4(F) and M7–1(E). Is the resistance within specifications? (See Resistance Chart.)	Go to Diagnostic Aids	Go to Step 7

Downloaded from www.Manualslib.com manuals search engine

DTC P0713 Transmission Fluid Temperature (TFT) Sensor Circuit High Input (Cont'd)

Step	Action	Yes	No
7	1. Remove the transmission oil pan. 2. Check the internal wiring harness for an open. Refer to Transmission Oil Temperature Sensor (Main Case) in Automatic Transmission (4L30–E) section. Was a problem found and corrected?	Go to Step 14	Go to Step 8
8	1. Disconnect the internal wiring harness at the TFT sensor. 2. Measure the resistance of the TFT sensor. Is the resistance within specifications? (See Resistance Chart.)	Go to Diagnostic Aids	Go to Step 9
9	Replace TFT sensor. Refer to Transmission Oil Temperature Sensor (Main Case) in Automatic Transmission (4L30–E) section. Is the replacement complete?	Go to Step 14	—
10	Check circuit RED/WHT for an open or short to B+. Was a problem found?	Go to Step 14	Go to Step 11
11	Check circuit RED/BLK for an open. Was a problem found?	Go to Step 14	Go to Step 12
12	Check the PCM for faulty or intermittent connections. Was a problem found?	Go to Step 14	Go to Step 13
13	Replace the PCM. Refer to Powertrain Control Module (PCM) in Automatic Transmission (4L30–E) section. Is the replacement complete?	Go to Step 14	—
14	1. After the repair is complete, use the scan tool to select "DTC", then "Clear Info" function and ensure the following conditions are met: 2. TFT sensor indicates a voltage less than 4.92 volts for 2 seconds. 3. Review the scan tool "DTC Info". Has the last test failed or is the current DTC displayed?	Begin diagnosis again Go to Step 1	Repair verified Exit DTC table

Downloaded from www.Manualslib.com manuals search engine

DTC P0719 Brake Switch Circuit Low (Stuck On)

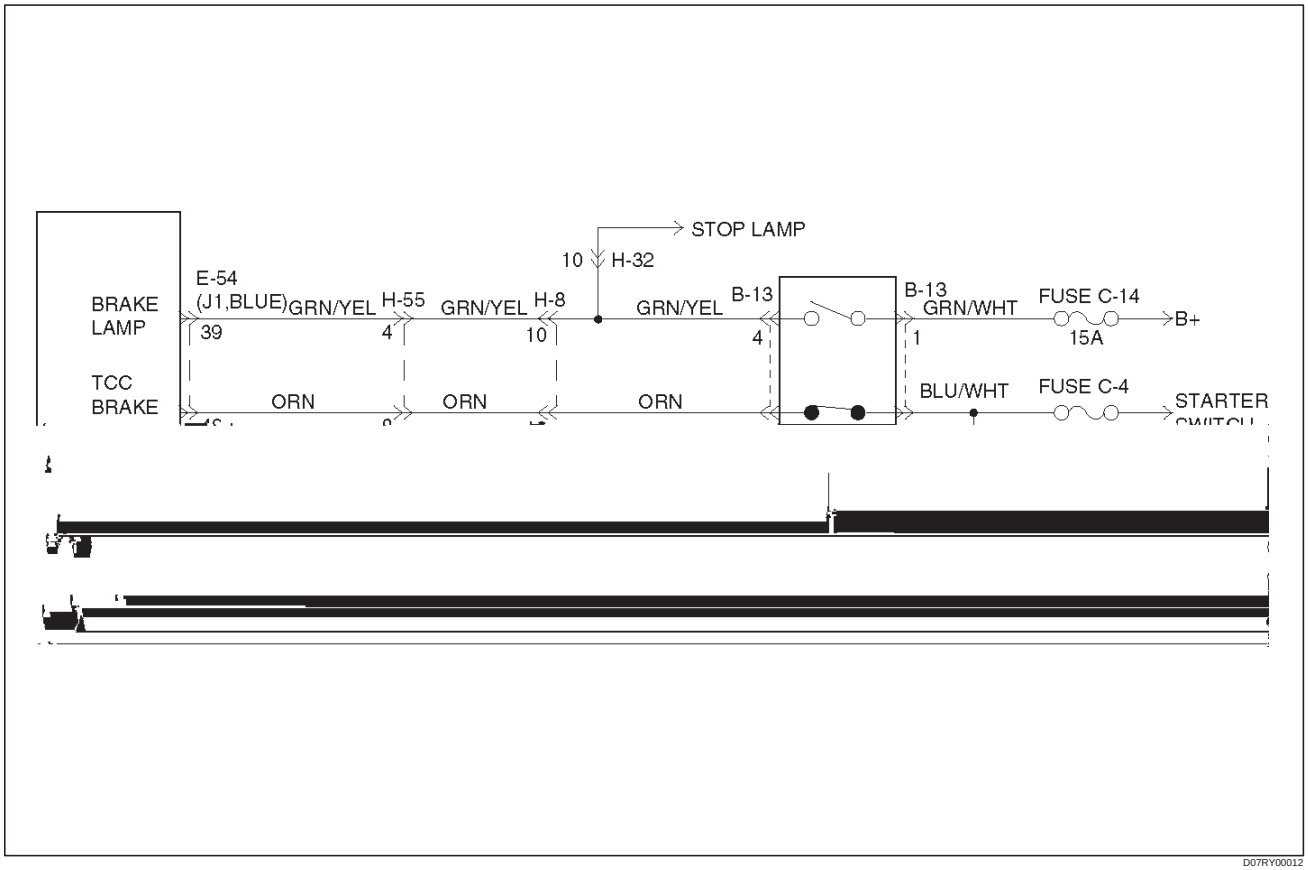

Circuit Description:

The brake switch indicates brake pedal status to the Powertrain Control Module (PCM). The brake switch is a normally–closed switch that supplies battery voltage on circuit ORN to the PCM. Applying the brake pedal opens the switch, interrupting voltage to the PCM. When the brake pedal is released, the PCM receives a constant voltage signal. If the PCM receives a zero voltage signal at the brake switch input, and the Torque Converter Clutch (TCC) is engaged, the PCM de–energizes the Torque Converter Clutch Solenoid Valve (TCC Sol. Valve). The PCM disregards the brake switch input for TCC scheduling if there is a brake switch circuit fault (Refer to Diagnostic Aids).

When the PCM detects an open brake switch circuit (0 volts, low input) during accelerations, then DTC P0719 sets. DTC P0719 is a type D DTC.

Conditions For Setting The DTC

- No OSS Assy. DTCs P0722 or P0723.
- The PCM detects an open brake switch or circuit (0 volts) for 15 minutes without changing for 2 seconds, and the following events occur seven consecutive times:
  - The vehicle speed is less than 8 km/h (5 mph);
  - then the vehicle speed is 8–32 km/h (5–20 mph) for 4 seconds;
  - then the vehicle speed is greater than 32 km/h (20 mph) for 4 seconds.

Action Taken When The DTC Sets

- The PCM does not illuminate the Malfunction Indicator Lamp (MIL).
- DTC P0719 stores in PCM history.

Conditions For Clearing The DTC

- A scan tool can clear the DTC from the PCM history. The PCM clears the DTC from the PCM history if the vehicle completes 40 warm–up cycles without a failure reported.
- The PCM cancels the DTC default actions when the fault no longer exists and the ignition is OFF long enough in order to power down the PCM.

Diagnostic Aids

- Inspect the wiring for poor electrical connections at the PCM and brake switch. Look for possible bent, backed out, deformed or damaged terminals. Check for weak terminal tension as well. Also check for a chafed wire that could short to bare metal or other wiring. Inspect for a broken wire inside the insulation.
- When diagnosing for a possible intermittent short or open condition, move the wiring harness while observing test equipment for a change.
- Check customer driving habits and/or unusual driving conditions (i.e. stop and go, highway).
- Check brake switch for proper mounting and adjustment.

Downloaded from www.Manualslib.com manuals search engine

Test Description

The numbers below refer to the step numbers on the diagnostic chart.

3. This step isolates the brake switch as a source for setting the DTC.

DTC P0719 Brake Switch Circuit Low (Stuck On)

Step	Action	Yes	No
1	Was the Powertrain On–Board Diagnostic (OBD) System Check performed?	Go to Step 2	Go to Powertrain OBD System Check
2	1. Install the scan tool. 2. With the engine “off,” turn the ignition switch to the “on” position. NOTE: Before clearing the DTC(s), use the scan tool in order to record the “Failure Records” for reference. Using the “Clear Info” function will erase the stored “Failure Records” from the PCM. 3. Record the “DTC Failure Records”, then clear the DTC(s). 4. Select “TCC Brake Switch” on the scan tool. 5. Disconnect the brake switch connector from the brake switch. 6. Connect a test lamp from cavity B13–2 of the brake switch connector to a known good ground. Is the test lamp ON?	Go to Step 3	Go to Step 4
3	Install a J 36169–A Fused Jumper Wire from terminal B13–3 to terminal B13–2 of the brake switch connector. Did the TCC Brake Switch status change from Open to Closed?	Go to Step 7	Go to Step 9
4	1. Remove the fuse C–4 (15A). 2. Inspect the fuse for an open. Is the fuse open?	Go to Step 5	Go to Step 8
5	Inspect circuit BLU/WHT for a short to ground condition. Repair the circuit if necessary. Did you find a short to ground condition?	Go to Step 11	Go to Step 6
6	Inspect circuit ORN for a short to ground condition. Repair the circuit if necessary. Did you find a short to ground condition?	Go to Step 11	Go to Step 10
7	Replace the brake switch. Is the replacement complete?	Go to Step 11	—
8	Inspect circuit BLU/WHT for an open condition. Repair the circuit if necessary. Did you find and correct an open condition?	Go to Step 11	—
9	Inspect circuit ORN for an open. Did you find an open condition?	Go to Step 11	Go to Step 10

Downloaded from www.Manualslib.com manuals search engine

DTC P0719 Brake Switch Circuit Low (Stuck On) (Cont'd)

Step	Action	Yes	No
10	Replace the PCM. Is the replacement complete?	Go to Step 11	—
11	In order to verify your repair, perform the following procedure: 1. Select DTC. 2. Select Clear Info. 3. With the engine "off," turn the ignition switch to the "on" position. 4. Do not depress the brake pedal. 5. Verify that the TCC Brake Switch status indicates "Closed" (12 volts) for 2 seconds. 6. Select Specific DTC. Enter DTC P0719. Has the test run and passed?	System OK	Begin the diagnosis again. Go to Step 1

Downloaded from www.Manualslib.com manuals search engine

DTC P0722 Automatic Transmission Output Speed Sensor (OSS) Low Input

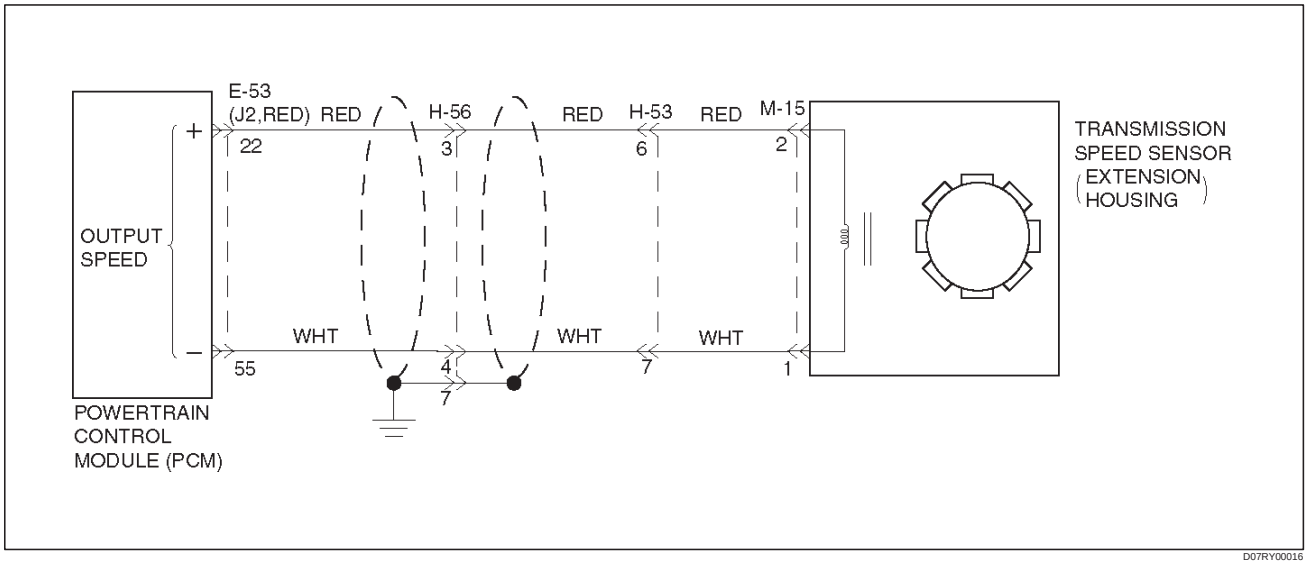

Circuit Description

Output speed information is provided to the PCM by the OSS, which is a permanent magnet (PM) generator. The PM generator produces a pulsing AC voltage. The AC voltage level and number of pulses increases as the speed of the vehicle increases. The PCM then converts the pulsing voltage to output speed, which is used for calculations. The vehicle speed can be displayed with a scan tool.

This DTC detects a low output speed when there is a high engine speed in a drive gear range. This is a type “B” DTC.

Conditions For Setting The DTC

- No MAP DTCs P0107 or P0108, P0106, P1106, P1107.
- No TPS DTCs P0122 or P0123.
- Not in Park or Neutral.
- TP angle is greater than 10%.
- Engine vacuum is between 0 and 70kPa.
- Engine speed is between 3,000 and 7,000 rpm.
- Transmission output speed is less than 0 rpm.
- All conditions met for 5 seconds.

Action Taken When The DTC Sets

- Fixed to 4th gear.
- Maximum line pressure.
- Inhibit TCC engagement.
- For lamp illuminate refer to DTC type definition (type B).

Conditions For Clearing The MIL/DTC

- The PCM will turn off the MIL and CHECK TRANS Lamp after three consecutive ignition cycles without a failure reported.
- The DTC can be cleared from the PCM history by using a scan tool. The DTC will be cleared from history when the vehicle has achieved 40 warmup cycles without a failure reported.
- The PCM will cancel the DTC default actions when the fault no longer exists and the ignition is cycled “off” long enough to power down the PCM.

Diagnostic Aids

- An OSS DTC P0722 will set when no output speed is at detected at start off.
- Inspect the wiring for poor electrical connection at the PCM. Look for possible bent, backed out, deformed or damaged terminals. Check for weak terminal tension as well. Also check for a chafed wire that could short to bare metal or other wiring. Inspect for a broken wire inside the insulation.
- When diagnosing for a possible intermittent short or open condition, move the wiring harness while observing test equipment for a change.

Test Description

The numbers below refer to the step numbers on the diagnostic chart:

4. This test checks the OSS circuit.
5. This test checks the integrity of the OSS.
7. This test checks the 5–volt and ground circuit of the PCM.

Downloaded from www.Manualslib.com manuals search engine

DTC P0722 Automatic Transmission Output Speed Sensor (OSS) Low Input

Step	Action	Yes	No
1	Were you sent here from the “Powertrain On–Board Diagnostic (OBD) System Check”?	Go to Step 2	Go to OBD System Check Refer to Driveability and Emissions in Engine section
2	1. Install the scan tool. 2. With the engine “off”, turn the ignition switch “on”. NOTE: Before clearing DTC(s), use the scan tool to record “Freeze Frame” and “Failure Records” for reference, as data will be lost when the “Clear Info” function is used. 3. Record the DTC “Freeze Frame” and “Failure Records”. 4. Raise the drive wheels. 5. Start the engine. 6. Place the transmission in any drive range. With the drive wheels rotating, does the “Trans Output Speed” increase with the drive wheel speed?	Go to Diagnostic Aids	Go to Step 3
3	Check for the most current and/or incorrect calibration. Is the calibration current?	Go to Step 16	Go to Step 4
4	1. Turn the ignition “off”. 2. Disconnect the J2 (RED) PCM connector. 3. Using the J39200 DVOM, measure the resistance between harness connector terminals J2–22 and J2–55. Is the reading 3,000 ohms?	Go to Step 5	Go to Step 6
5	1. Select AC volts. 2. Rotate the rear wheels, ensuring the driveshaft is turning. Is the voltage greater than 0.5 volts?	Go to Step 7	Go to Step 8
6	Inspect circuits RED and WHT for a poor connection or an open circuit. Was a problem found?	Go to Step 17	Go to Step 8
7	1. Reconnect the J2 (RED) PCM connector. 2. Disconnect the OSS harness from the OSS. 3. With the engine “off”, turn the ignition “on”. 4. Using the J 39200 DVOM, measure the voltage at the OSS harness connector terminals M15–2 and M15–1. Is the reading between 4.0 to 5.1 volts?	Go to Step 16	Go to Step 10
8	1. Remove the OSS. 2. Check the output shaft speed sensor rotor for damage or misalignment. Refer to Speed Sensor (Extension Housing) in Automatic Transmission (4L30–E) section. Was a problem found?	Go to Step 17	Go to Step 9
9	Replace the OSS. Is the replacement complete?	Go to Step 17	—
10	Was the reading in step 7 less than 4.0 volts?	Go to Step 12	Go to Step 11
11	Was the reading in Step 7 greater than 5.1 volts?	Go to Step 15	—
12	Using the J 39200 DVOM to chassis ground, measure the voltage on circuit RED. Is the reading between 4.0 to 5.1 volts?	Go to Step 13	Go to Step 14

Downloaded from www.Manualslib.com manuals search engine

DTC P0722 Automatic Transmission Output Speed Sensor (OSS) Low Input (Cont'd)

Step	Action	Yes	No
13	Repair the open in circuit WHT. Is the repair complete?	Go to Step 17	—
14	Check circuit RED for a short to ground or open. Was a problem found and corrected?	Go to Step 17	Go to Step 16
15	Repair the short to B+ in circuit RED. Is the repair complete?	Go to Step 17	—
16	Replace the PCM. Refer to Powertrain Control Module (PCM) in automatic Transmission (4L30–E) section. Is the replacement complete?	Go to Step 17	—
17	1. After the repair is complete, use the scan tool to select "DTC", then "Clear Info" function and operate the vehicle under the following conditions: Transmission output speed is greater than 101 rpm for 3 seconds. 2. Review the scan tool "DTC Info". Has the last test failed or is the current DTC displayed?	Begin diagnosis again Go to Step 1	Repair verified Exit DTC table

Downloaded from www.Manualslib.com manuals search engine

DTC P0723 Automatic Transmission Output Speed Sensor (OSS) Intermittent

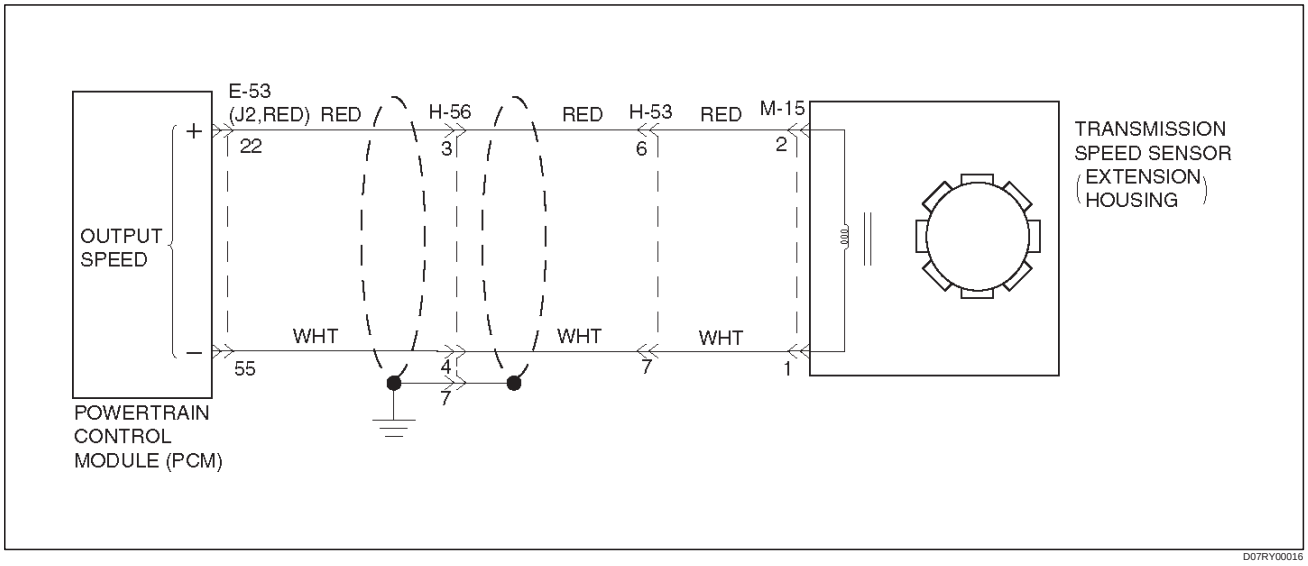

Circuit Description

Output speed information is provided to the PCM by the OSS, which is a permanent magnet (PM) generator. The PM generator produces a pulsing AC voltage. The AC voltage level and number of pulses increases as the speed of the vehicle increases. The PCM then converts the pulsing voltage to output speed, which is used for calculations. The vehicle speed can be displayed with a scan tool.

This DTC detects a low output speed when there is a high engine speed in a drive gear range. This is a type “B” DTC.

Conditions For Setting The DTC

Drive range

- Engine running time is greater than 5 seconds.
- Output speed is greater than 1300 rpm for 2 seconds.
- NORAW-NORAWLAST < 200 rpm for 2 seconds.

  NORAW Latest raw data of output shaft speed.

  NORAWLAST Filtered pervious data of output speed.
- Transmission negative output speed change is greater than 1300 rpm.
- Conditions met for 3 seconds.

Action During Detection Time

Output speed value is frozen.

Action Taken When The DTC Sets

- Fixed to 4th gear.
- Maximum line pressure.
- Inhibit TCC engagement.
- For lamp illumination refer to DTC type definition (type B).

Conditions For Clearing The MIL/DTC

- The PCM will turn off the MIL and CHECK TRANS Lamp after three consecutive trips without a failure reported.
- The DTC can be cleared from the PCM history by using a scan tool.
- The DTC will be cleared from history when the vehicle has achieved 40 warmup cycles without failure reported.
- The PCM will cancel the DTC default actions when the fault no longer exists and the ignition is cycled “off” long enough to power down the PCM.

Diagnostic Aids

- A OSS DTC P0723 will set when output speed has been detected and is lost.
- Inspect the wiring for poor electrical connection at the PCM. Look for possible bent, backed out, deformed or damaged terminals. Check for weak terminal tension as well. Also check for a chafed wire that could short to bare metal or other wiring. Inspect for a broken wire inside the insulation.
- When diagnosing for a possible intermittent short or open condition, move the wiring harness while observing test equipment for a change.

Test Description

The numbers below refer to the step numbers on the diagnostic chart:

4. This test checks the OSS circuit.
5. This test checks the integrity of the OSS.
7. This test checks the 5–volt and ground circuit of the PCM.

Downloaded from www.Manualslib.com manuals search engine

DTC P0723 Automatic Transmission Output Speed Sensor (OSS) Intermittent

Step	Action	Yes	No
1	Were you sent here from the “Powertrain On–Board Diagnostic (OBD) System Check”?	Go to Step 2	Go to OBD System Check Refer to Driveability and Emissions in Engine section
2	1. Install the scan tool. 2. With the engine “off”, turn the ignition switch “on”. NOTE: Before clearing DTC(s), use the scan tool to record “Freeze Frame” and “Failure Records” for reference, as data will be lost when the “Clear Info” function is used. 3. Record the DTC “Freeze Frame” and “Failure Records”. 4. Raise the drive wheels. 5. Start the engine. 6. Place the transmission in any drive range. With the drive wheels rotating, does the “Trans Output Speed” increase with the drive wheel speed?	Go to Diagnostic Aids	Go to Step 3
3	Check for the most current and/or incorrect calibration. Is the calibration current?	Go to Step 16	Go to Step 4
4	1. Turn the ignition “off”. 2. Disconnect the J2 (RED) PCM connector. 3. Using the J39200 DVOM, measure the resistance between harness connector terminals J2–22 and J2–55. Is the reading 3,000 ohms?	Go to Step 5	Go to Step 6
5	1. Select AC volts. 2. Rotate the rear wheels, ensuring the driveshaft is turning. Is the voltage greater than 0.5 volts?	Go to Step 7	Go to Step 8
6	Inspect circuits RED and WHT for a poor connection or an open circuit. Was a problem found?	Go to Step 17	Go to Step 8
7	1. Reconnect the J2 (RED) PCM connector. 2. Disconnect the OSS harness from the OSS. 3. With the engine “off”, turn the ignition “on”. 4. Using the J 39200 DVOM, measure the voltage at the OSS harness connector terminals M15–2 and M15–1. Is the reading between 4.0 to 5.1 volts?	Go to Step 16	Go to Step 10
8	1. Remove the OSS. 2. Check the output shaft speed sensor rotor for damage or misalignment. Refer to Speed Sensor (Extension Housing) in Automatic Transmission (4L30–E) section. Was a problem found?	Go to Step 17	Go to Step 9
9	Replace the OSS. Is the replacement complete?	Go to Step 17	—
10	Was the reading in step 7 less than 4.0 volts?	Go to Step 12	Go to Step 11
11	Was the reading in Step 7 greater than 5.1 volts?	Go to Step 15	—
12	Using the J 39200 DVOM to chassis ground, measure the voltage on circuit RED. Is the reading between 4.0 to 5.1 volts?	Go to Step 13	Go to Step 14

Downloaded from www.Manualslib.com manuals search engine

DTC P0723 Automatic Transmission Output Speed Sensor (OSS) Intermittent (Cont'd)

Step	Action	Yes	No
13	Repair the open in circuit WHT. Is the repair complete?	Go to Step 17	—
14	Check circuit RED for a short to ground or open. Was a problem found and corrected?	Go to Step 17	Go to Step 16
15	Repair the short to B+ in circuit RED. Is the repair complete?	Go to Step 17	—
16	Replace the PCM. Refer to Powertrain Control Module (PCM) in Automatic Transmission (4L30–E) section. Is the replacement complete?	Go to Step 17	—
17	1. After the repair is complete, use the scan tool to select "DTC", then "Clear Info" function and operate the vehicle under the following conditions: Transmission output speed is greater than 101 rpm for 3 seconds. 2. Review the scan tool "DTC Info". Has the last test failed or is the current DTC displayed?	Begin diagnosis again Go to Step 1	Repair verified Exit DTC table

Downloaded from www.Manualslib.com manuals search engine

DTC P0724 Brake Switch Circuit High (Stuck Off)

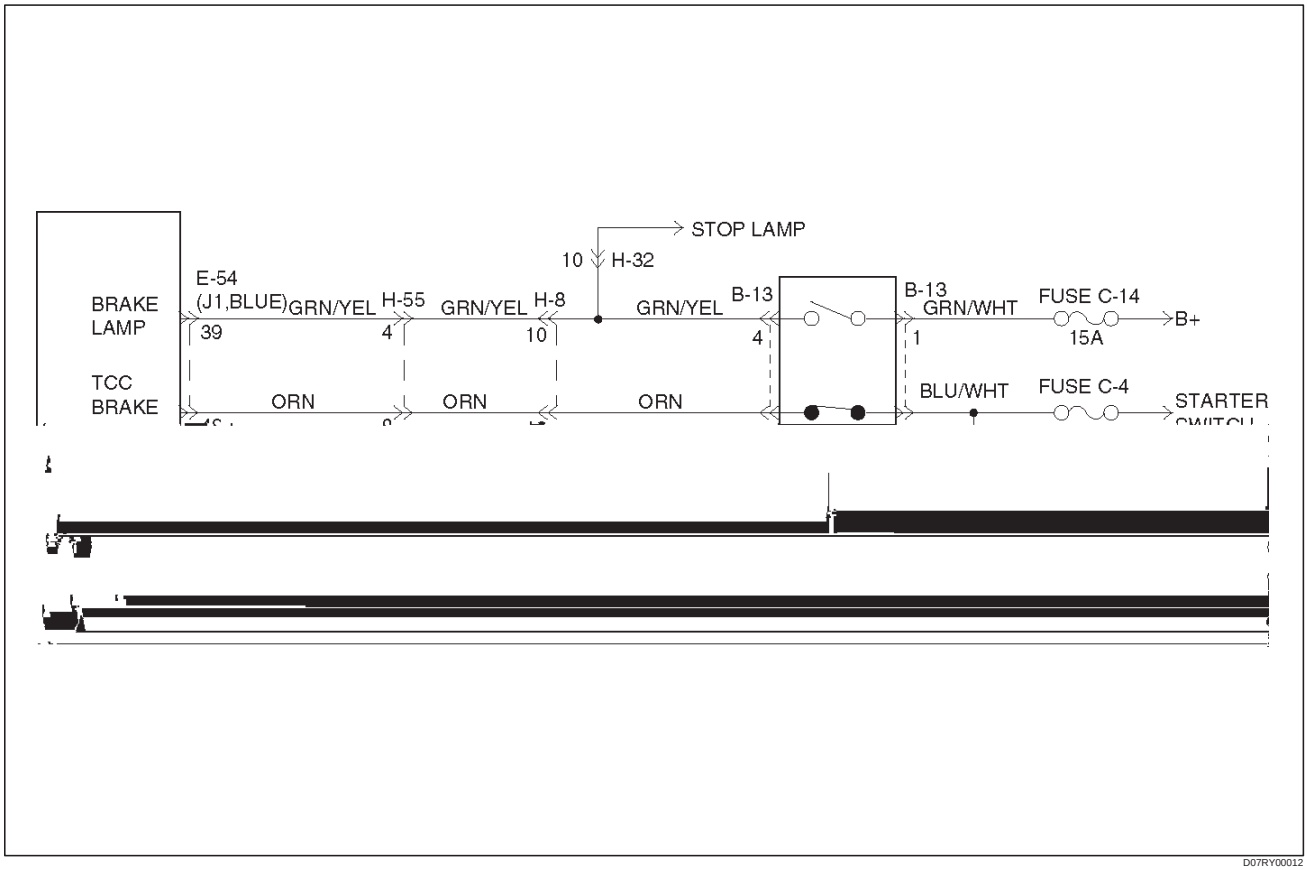

D07RY00012

Circuit Description:

The brake switch indicates brake pedal status to the Powertrain Control Module (PCM). The brake switch is a normally–closed switch that supplies battery voltage on circuit ORN to the PCM. Applying the brake pedal opens the switch, interrupting voltage to the PCM. When the brake pedal is released, the PCM receives a constant voltage signal. If the PCM receives a zero voltage signal at the brake switch input, and the Torque Converter Clutch (TCC) is engaged, the PCM de–energizes the Torque Converter Clutch Solenoid Valve (TCC Sol. Valve). The PCM disregards the brake switch input for TCC scheduling if there is a brake switch circuit fault (Refer to Diagnostic Aids).

When the PCM detects a closed brake switch circuit (12 volts, high input) during decelerations, then DTC P0724 sets. DTC P0724 is a type D DTC.

Conditions For Setting The DTC

- No OSS Assy. DTCs P0722 or P0723.
- The PCM detects a closed brake switch circuit (12 volts) without changing and the following events occur seven consecutive times:
  - The vehicle speed is greater than 32 km/h (20 mph) for 4 seconds;
  - then the vehicle speed is between 8–32 km/h (5–20 mph) for 4 seconds;
  - then the vehicle speed is less than 8 km/h (5 mph).

Action Taken When The DTC Sets

- The PCM does not illuminate the Malfunction Indicator Lamp (MIL).
- DTC P0724 stores in PCM history.

Conditions For Clearing The DTC

- A scan tool can clear the DTC from the PCM history. The PCM clears the DTC from the PCM history if the vehicle completes 40 warm–up cycles without a failure reported.
- The PCM cancels the DTC default actions when the fault no longer exists and the ignition is OFF long enough in order to power down the PCM.

Diagnostic Aids

- Inspect the wiring for poor electrical connection at the PCM. Look for possible bent, backed out, deformed or damaged terminals. Check for weak terminal tension as well. Also check for a chafed wire that could short to bare metal or other wiring. Inspect for a broken wire inside the insulation.
- When diagnosing for a possible intermittent short or open condition, move the wiring harness while observing test equipment for a change.
- Check customer driving habits and/or unusual traffic conditions (i.e. stop and go, expressway).
- Check brake switch for proper mounting and adjustment.

Downloaded from www.Manualslib.com manuals search engine

Test Description

The numbers below refer to the step numbers on the diagnostic chart.

2. This step isolates the brake switch as a source for setting the DTC.

DTC P0724 Brake Switch Circuit High (Stuck Off)

Step	Action	Yes	No
1	Was the Powertrain On–Board Diagnostic (OBD) System Check performed?	Go to Step 2	Go to Powertrain OBD System Check
2	1. Install the scan tool. 2. With the engine “off,” turn the ignition switch to the “on” position. NOTE: Before clearing the DTC(s), use the scan tool in order to record the “Failure Records” for reference. Using the “Clear Info” function will erase the stored “Failure Records” from the PCM. 3. Record the DTC Failure Records, then clear the DTC(s). 4. Select “TCC Brake Switch” on the scan tool. 5. Disconnect the brake switch connector from the brake switch. Did the TCC brake switch status change from “Closed” to “Open”?	Go to Step 3	Go to Step 4
3	Replace the brake switch. Is the replacement complete?	Go to Step 6	—
4	Inspect circuit ORN for a short to B+ condition. Repair the circuit if necessary. Did you find a short to B+ condition?	Go to Step 6	Go to Step 5
5	Replace the PCM. Is the replacement complete?	Go to Step 6	—
6	In order to verify your repair, perform the following procedure: 1. Select DTC. 2. Select “Clear Info”. 3. With the engine “off” turn the ignition switch to the “on” position. 4. Apply the brake pedal. 5. Verify that the TCC brake switch status indicates “Open” (0 volts) for 2 seconds. 6. Select Specific DTC. Enter DTC P0724. Has the test run and passed?	System OK	Begin the diagnosis again. Go to Step 1

Downloaded from www.Manualslib.com manuals search engine

DTC P0730 Gear Error Without Input Speed

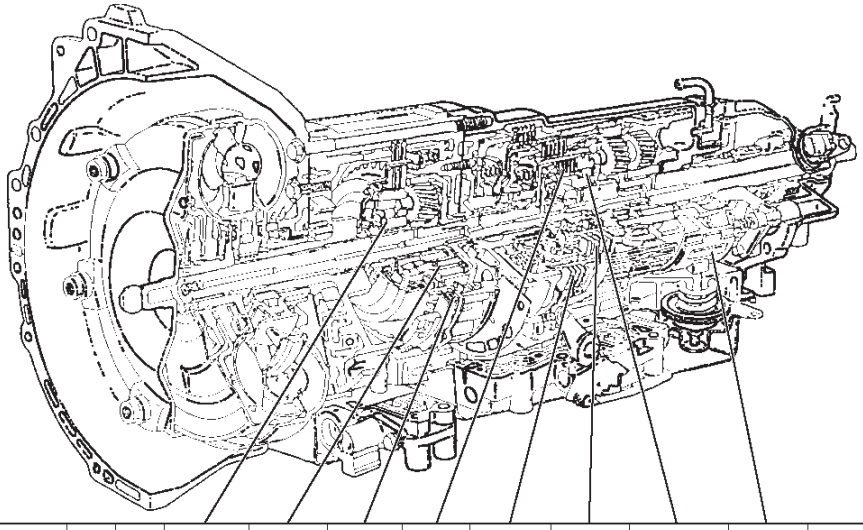

RANGE	GEAR	SOL A N.C.	SOL B N.O.	O/DRIVE FREE WHEEL (OFW)	O/RUN CLUTCH (OC)	FOURTH CLUTCH (C4)	THIRD CLUTCH (C3)	REVERSE CLUTCH (RC)	SECOND CLUTCH (C2)	PRINCIPLE SPRAG ASM (PFW)	BAND ASM (B)	ENGINE BRAKING	TORQUE CONV. CLUTCH
P-N		OFF	ON		APP							NO	NO
R	REVERSE	OFF	ON	LD	APP			APP		LD		NO	NO
D	1ST	OFF	ON	LD	APP					LD	APP	NO	NO
	2ND	ON	ON	LD	APP				APP	FW	APP	YES	ECCC
	3RD	ON	OFF	LD	APP		APP		APP	NE		YES	ECCC
	4TH	OFF	OFF	FW		APP	APP		APP	NE		YES	ECCC
3	1ST	OFF	ON	LD	APP					LD	APP	NO	NO
	2ND	ON	ON	LD	APP				APP	FW	APP	YES	ECCC
	3RD	ON	OFF	LD	APP		APP		APP	NE		YES	ECCC
2	1ST	OFF	ON	LD	APP		APP			LD	APP	YES	NO
	2ND	ON	ON	LD	APP				APP	FW	APP	YES	ECCC
L	1ST	OFF	ON	LD	APP		APP			LD	APP	YES	NO

LD : LOCKED IN DRIVE FW : FREEWHEELING NE : NOT EFFECTIVE APP : APPLIED

D07RY00055

Circuit Description

- The Powertrain Control Module (PCM) calculates the slippage of the converter and transmission based upon the engine speed, the output speed, and the current gear ratio.
- The slippage of the converter at a high enough engine speed is low. The transmission should not slip more than a given value when there is no shift.
- This DTC detects a slip at each gear. This is a type “C” DTC.

Conditions For Setting The DTC

- No Output Speed Sensor DTC(s) P0722, P0723.
- Not in Park, Neutral, or Reverse.
- Engine speed is greater than 3,500 rpm.
- 3 seconds since upshift.
- No Transmission Range Switch DTC(s) P0705, P0706.
- 3 seconds since downshift.
- 3 seconds since garage shift (N→D).
- And one of the following conditions occur:
  - Slip is greater than 508 rpm in 1st gear.
  - Slip is greater than 468 rpm in 2nd gear.
  - Slip is greater than 449 rpm on 3rd gear.
  - Slip is greater than 440 rpm on 4th gear.
- All conditions met for 5.5 seconds.

Action Taken When The DTC Sets

- Maximum line pressure.
- The PCM will not illuminate the Malfunction Indicator Lamp (MIL).

Downloaded from www.Manualslib.com manuals search engine

- The PCM will illuminate the CHECK TRANS Lamp.
- Turn force motor OFF.

Conditions For Clearing The DTC/CHECK TRANS Lamp

- The PCM will turn “off” the CHECK TRANS Lamp after three consecutive ignition cycles without a failure reported.
- The DTC can be cleared from PCM memory by using a scan tool.
- The DTC can also be cleared from memory when the vehicle has made 40 warmup cycles without a failure reported.
- The PCM will cancel the DTC Actions Taken items when the fault conditions no longer exist and the ignition is cycles “off” long enough to power down the PCM.

Diagnostic Aids

- Check for intermittent output speed sensor circuit problems.
- Check for possible incorrect calibration. (PCM part No., tire specification, and rear axle ratio)

Test Description

The numbers below refer to the step numbers on the diagnostic chart:

3. This step checks for possible low fluid level causing slipping resulting in an undefined gear ratio.
4. This step checks for correct gear ratios for commanded gears.
5. This step checks for low line pressure.

DTC P0730 Gear Error Without Input Speed

Step	Action	Yes	No
1	Were you sent here from the “On–Board Diagnostic (OBD) System Check”?	Go to Step 2	Go to OBD System Check Refer to Driveability and Emission in Engine section
2	Visually inspect the transmission cooling system for fluid leaks. ● Refer to Chart 16: Possible Causes of Transmission Fluid Leaks of Mechanical/Hydraulic Diagnosis Symptoms Index in Automatic Transmission (4L30–E) section Was condition found and corrected?	Go to Step 7	Go to Step 3
3	Refer to Checking Transmission Fluid Level and Condition in Automatic Transmission (4L30–E) section. Has transmission fluid checking procedure been performed?	Go to Step 4	Go to Checking Transmission Fluid Level and Condition in Automatic Transmission (4L30–E) section
4	1. Install the scan tool. 2. Turn the ignition switch to the “on” position. 3. Engine not running. NOTE: Before clearing DTC(s) use the scan tool to record the “Failure Records” for reference, as data will be lost when the “Clear Info” function is used. 4. Record the Failure Record data. 5. Use the scan tool snapshot mode to record transmission gear ratios. 6. Drive vehicle in transmission gear ranges 1, 2, 3, and D with the engine speed is greater than 3,500 rpm for 5.5 seconds. 7. Record each transmission gear. 1st:2.73 – 2.99 2nd:1.54 – 1.71 3rd:0.93 – 1.05 4th:0.66 – 0.78 Does commanded gear ratio match ranges as shown?	Refer to Diagnostic Aids	Go to Step 5

Downloaded from www.Manualslib.com manuals search engine

DTC P0730 Gear Error Without Input Speed (Cont'd)

Step	Action	Yes	No
5	Perform line pressure check. ● Refer to Line Pressure Test in Automatic Transmission (4L30–E) section. Was condition found and corrected?	Go to Step 7	Go to Step 6
6	Check for possible clutch slippage. ● Refer to Chart 6: Diagnostic Trouble Code (DTC) P0730 of Mechanical/Hydraulic Diagnosis Symptoms Index in Automatic Transmission (4L30–E) section. Was condition found and corrected?	Go to Step 7	—
7	1. After the repair is complete, use the scan tool to select "DTC", then "Clear info" function. 2. Operate the vehicle under the following conditions: ● Drive the vehicle in D4 with the engine speed greater than 3,500 rpm to obtain anyone of the following gear ratios for seven seconds. 1st 1:2.73 – 1:2.99 2nd 1:1.54 – 1:1.71 3rd 1:0.93 – 1:1.05 4th 1:0.66 – 1:0.78 Has the last test failed?	Begin diagnosis again Go to Step 1	Repair verified Exit DTC table

Downloaded from www.Manualslib.com manuals search engine

DTC P0742 Torque Converter Clutch (TCC) System Stuck On

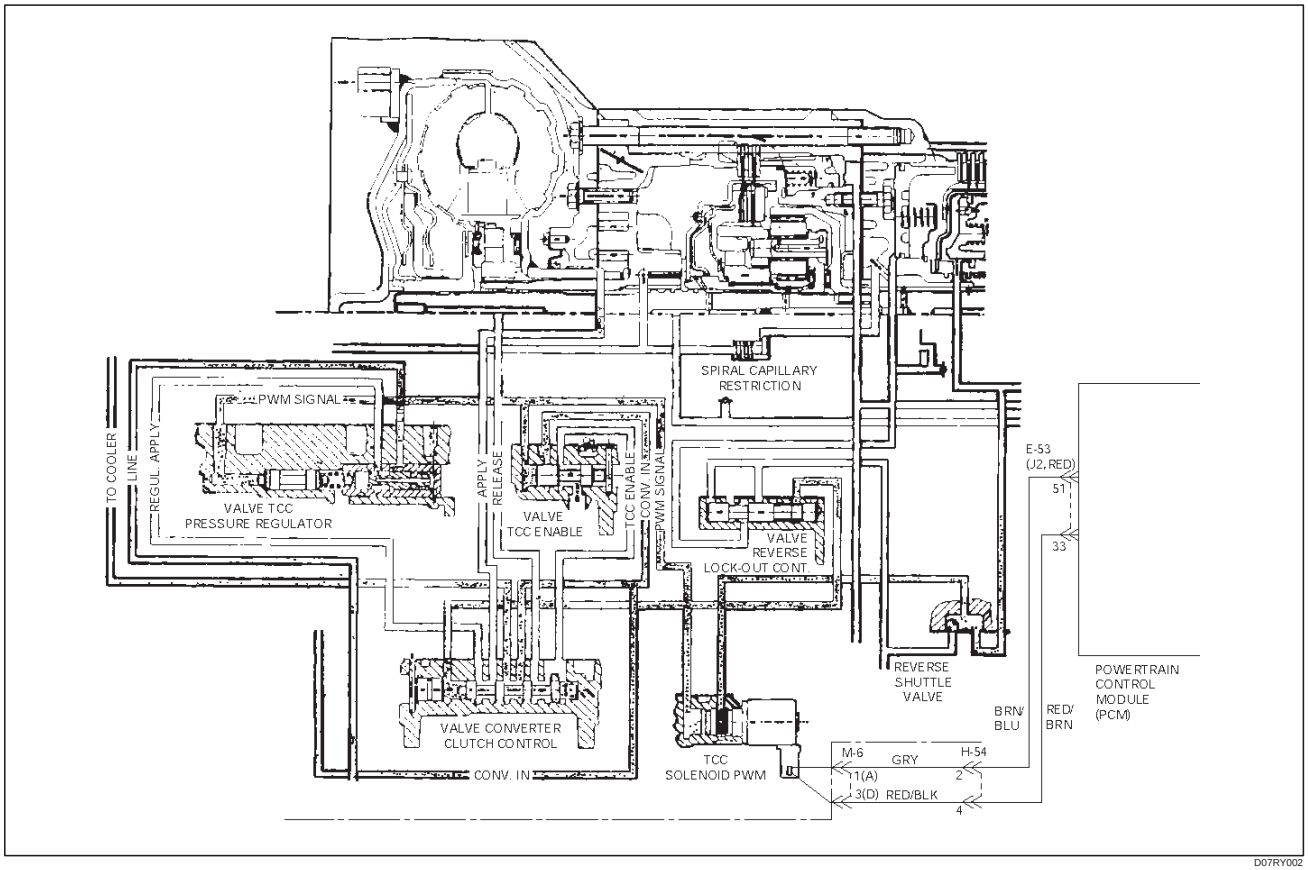

Circuit Description

The PCM energizes the TCC solenoid by creating an ignition voltage on circuit BRN/BLU. When ignition voltage is energized by the PCM, the TCC solenoid stops converter signal oil from exhausting. This causes converter signal oil pressure to increase and move the TCC valve. The TCC solenoid will deenergize when the PCM no longer provides ignition voltage. When the TCC solenoid is deenergized, it will exhaust fluid and release the TCC.

This DTC detects low torque converter slip when the TCC is commanded “off”. This is a type “B” DTC.

Conditions For Setting The DTC

The following conditions occur once per TCC cycle, three consecutive times:

- No TPS DTCs P0122 or P0123.
- No OSS DTCs P0722 or P0723.
- No TCC solenoid DTC P1860.
- TP angle is greater than 20%.
- Engine speed is greater than 500 rpm and less than 3,000 rpm.
- Engine vacuum is between 0 and 70 kPa.
- Commanded gear is not 1st.
- Gear range is D4.
- TCC is commanded “off”.
- No TCC Stuck off DTC P1870.
- TCC slip speed is between –20 and 40 rpm for 2 seconds.
- Vehicle speed is greater than 25 km/h (15 mph) and less than 120 km/h (75 mph).
- Speed ratio is greater than 0.9 and less than 2.0.

Action Taken When The DTC Sets

- For lamp illuminate refer to DTC type definition (type B).
- Inhibit TCC engagement.

Conditions For Clearing The MIL/DTC

- The PCM will turn off the MIL and CHECK TRANS Lamp after three consecutive ignition cycles without a failure reported.
- The DTC can be cleared from the PCM history by using a scan tool.
- The DTC will be cleared from history when the vehicle has achieved 40 warmup cycles without a failure reported.
- The PCM will cancel the DTC default actions when the fault no longer exists and the ignition is cycled “off” long enough to power down the PCM.

Downloaded from www.Manualslib.com manuals search engine

Diagnostic Aids

- If the TCC is mechanically stuck “on” with the parking brake applied and any gear range selected, the TCC fluid will mechanically apply the TCC, possibly causing an engine stall.

Test Description

The number below refers to the step number on the diagnostic chart:

3. This test checks the mechanical state of the TCC. (When the PCM commands the TCC solenoid “off”, the slip speed should increase).

DTC P0742 Torque Converter Clutch (TCC) System Stuck On

Step	Action	Yes	No
1	Were you sent here from the “Powertrain On–Board Diagnostic (OBD) System Check”?	Go to Step 2	Go to OBD System Check Refer to Driveability and Emissions in Engine section
2	1. Install the scan tool. 2. With the engine “off”, turn the ignition switch “on”. NOTE: Before clearing DTC(s), use the scan tool to record “Freeze Frame” and “Failure Records” for reference, as data will be lost when the “Clear Info” function is used. 3. Record the DTC “Freeze Frame” and “Failure Records”. 4. Using the scan tool, verify the “TP Sensor” operation. Are the “TP Sensor” values within 0.6 – 5.0 volts?	Go to Step 3	Go to Diagnostic Aids
3	Drive the vehicle in the D4 drive range in fourth gear under steady acceleration, with a TP angle greater than 20%. Does the scan tool display “TCC Slip Speed” between –30 and +30 rpm, while the displayed TCC solenoid state is “off”?	Go to Step 4	Go to Diagnostic Aids
4	The TCC is mechanically stuck “on”. Check the following items: ● Clogged exhaust orifice in the TCC solenoid. ● Converter clutch apply valve stuck in the apply position. ● Misaligned or damaged valve body gasket. ● Restricted release passage. Was a problem found and corrected?	Go to Step 5	—
5	1. After the repair is complete, use the scan tool to select “DTC”, then “Clear Info” function and ensure the following conditions are met: TCC slip speed must be between 200 and 2,500 rpm for 4 seconds. 2. Review the scan tool “DTC Info”. Has the last test failed or is the current DTC displayed?	Begin diagnosis again Go to Step 1	Repair verified Exit DTC table

Downloaded from www.Manualslib.com manuals search engine

DTC P0748 Pressure Control Solenoid (PCS) (Force Motor) Circuit Electrical

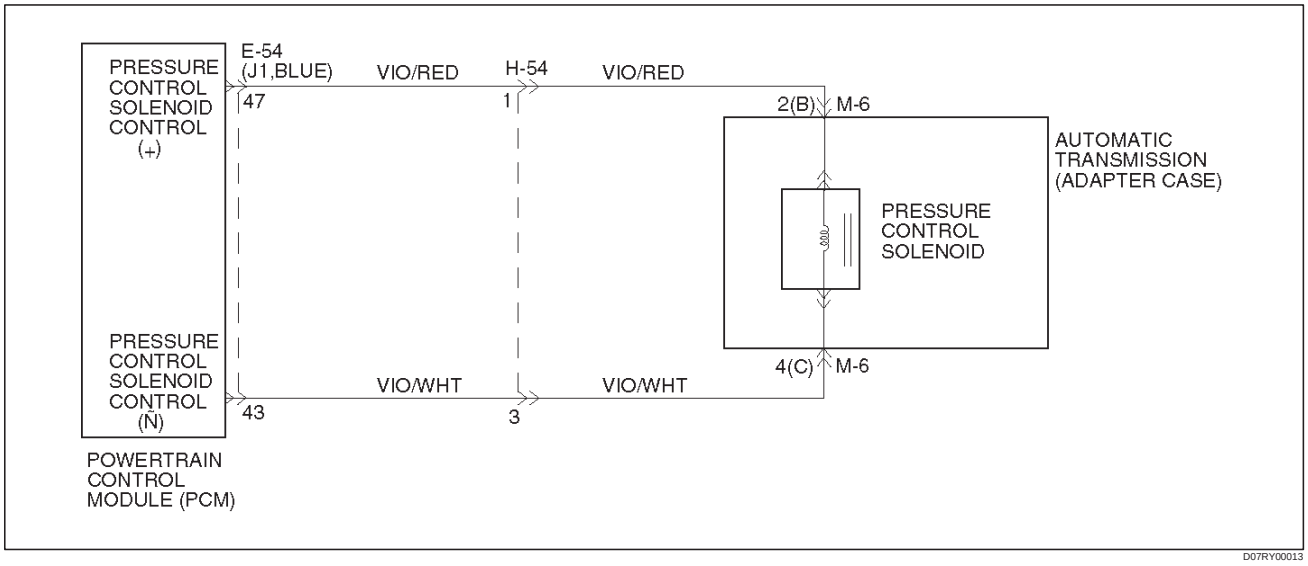

Circuit Description

The PCS is a PCM–controlled device used to regulate transmission line pressure. The PCM compares TPS voltage, engine rpm, and other inputs to determine the line pressure appropriate for a given load. The PCM will regulate the pressure by applying a varying amperage to the PCS. The applied amperage can vary from 0.1 to 1 amp, and is monitored by the PCM.
This DTC detects a continuous open or short to ground in the PCS circuit or the PCS. This is a type “C” DTC.

Conditions For Setting The DTC

- Battery voltage is between 10 and 16 volts.
- The PCM detects that the different between commanded and actual current is 200 milliampere (mA) for over 1 second.
- Engine speed is greater than 300 rpm.

Action Taken When the DTC Sets

- The PCM will not illuminate the Malfunction Indicator Lamp (MIL).
- Maximum line pressure.
- The PCM will illuminate the CHECK TRANS Lamp.
- Turn force motor OFF (Durability).

Conditions For Clearing The DTC/CHECK TRANS Lamp

- The PCM will turn “off” the CHECK TRANS Lamp after three consecutive ignition cycles without a failure reported.
- The DTC can be cleared from PCM history by using a scan tool.
- The DTC will be cleared from memory when the vehicle has achieved 40 warmup cycles without a failure reported.
- The PCM will cancel the DTC default actions when the fault no longer exists and the ignition is cycled “off” long enough to power down the PCM.

Diagnostic Aids

- Inspect the wiring for poor electrical connection at the PCM and at the transmission 4–way connector. Look for possible bent, backed out, deformed or damaged terminals. Check for weak terminal tension as well. Also check for a chafed wire that could short to bare metal or other wiring. Inspect for a broken wire inside the insulation.
- When diagnosing for a possible intermittent short or open condition, move the wiring harness while observing test equipment for a change.

Test Description

The numbers below refer to the step numbers on the diagnostic chart:

2. This test checks the ability of the PCM to command the PCS.
3. This test checks the PCS and internal wiring harness for incorrect resistance.

Downloaded from www.Manualslib.com manuals search engine

DTC P0748 Pressure Control Solenoid (PCS) (Force Motor) Circuit Electrical

Step	Action	Yes	No
1	Were you sent here from the “Powertrain On–Board Diagnostic (OBD) System Check”?	Go to Step 2	Go to OBD System Check Refer to Driveability and Emission in Engine section
2	1. Install the scan tool. 2. With the engine “off”, turn the ignition switch “on”. NOTE: Before clearing DTC(s), use the scan tool to record “Failure Records” for reference, as data will be lost when the “Clear Info” function is used. 3. Record the DTC “Failure Records”. 4. While the engine is operating, put the transmission in Park. 5. Using the scan tool, apply 0.1 amp through 1.0 amp while observing “PC Ref. Current” and “PC Act. Current”. Is the “PC Act. Current” reading always within 0.16 amp?	Go to Diagnostic Aids	Go to Step 3
3	1. Turn the ignition “off”. 2. Disconnect the transmission 4–way connector M–6. 3. Using the J39200 DVOM, measure the resistance between terminals M6–2(B) and M6–4(C). Is the resistance within 3–7 ohms?	Go to Step 7	Go to Step 4
4	1. Remove the transmission oil pan. Refer to Solenoid (Adapter Case Valve Body) in Automatic Transmission (4L30–E) section. 2. Disconnect the internal wiring harness at the PCS. 3. Measure the resistance of the PCS. Is the resistance within 3–7 ohms?	Go to Step 6	Go to Step 5
5	Replace the PCS. Is the replacement complete?	Go to Step 10	—
6	Repair the internal wiring harness for an open. Is the repair complete?	Go to Step 10	—
7	Inspect/repair circuits J1–47, M6–2(B), J1–43, and M6–4(C). Was a problem found?	Go to Step 10	Go to Step 8
8	Inspect/repair circuits J1–47, M6–2(B), J1–43, and M6–4(C) for a short to ground or poor connections. Was a problem found?	Go to Step 10	Go to Step 9
9	Replace the PCM. Refer to Powertrain Control Module (PCM) in Automatic Transmission (4L30–E) section. Is the replacement complete?	Go to Step 10	—
10	1. After the repair is complete, use the scan tool to select “DTC”, then “Clear Info” function and ensure the following conditions are met: The PCS duty cycle is not at its electrical high or low limit. 2. Review the scan tool “DTC Info”. Has the last test failed or is the current DTC displayed?	Begin diagnosis again Go to Step 1	Repair verified Exit DTC table

Downloaded from www.Manualslib.com manuals search engine

DTC P0751 Shift Solenoid A Performance (Stuck OFF)

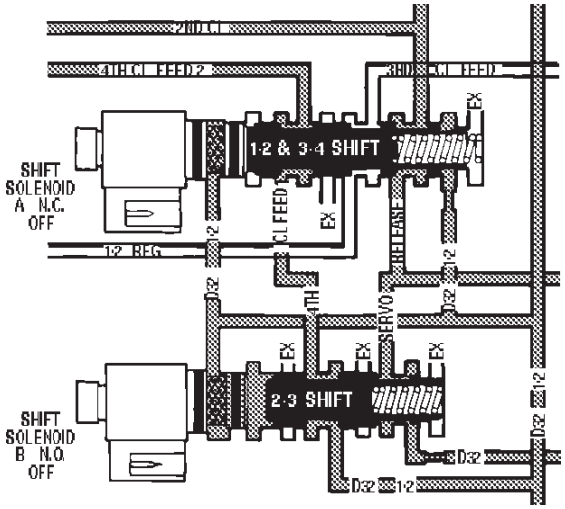

D07RT011

Circuit Description

The shift solenoid A is used to control fluid flow acting on the 1–2 and 3–4 shift valves. The solenoid is a normally close exhaust valve that is used with the shift solenoid B to allow four different shifting combinations.
The DTC detects when there is only a 1–1–4–4 shift pattern depending on the state of the mechanical failure instead of a 1–2–3–4 shift pattern. This is a type “B” DTC.

Conditions For Setting The DTC

- No ETC DTCs.
- No OSS DTCs P0722 or P0723.
- No TCC solenoid DTC P0742, P1860, P1870.
- No shift solenoid A DTC P0753.
- No shift solenoid B DTC P0758.
- Gear range is D4.
- Output speed is greater than 375 rpm.
- Transmission temperature is between 20˚ and 130˚C (68˚ and 266˚F).
- No range code P0705, P0706.
- No torque code (to be confirmed).
- Engine run for more 0 seconds and not influed cut-off (to be confirmed).

All the above conditions have been met and the combination of conditions 1, 2 occur two consecutive times.

Condition 1:

- 2nd gear is commanded for ≥ 1 sec
- 40 ≤ Engine Torque ≤ 400 N·m
- Throttle positon ≥ 10%
- 800 ≤ TCC slip ≤ 4000 rpm
- Speed ratio ≥ 0.6
- 2.75 ≤ Modeled Ratio ≤ 3.2 for 1 seconds.

Condition 2:

- 3rd Gear is commanded for ≥ 1 sec.
- 40 ≤ Engine Torque ≤ 400 N·m
- Trottle position ≥ 10%
- –8000 ≤ TCC slip ≤ 8000 rpm
- Speed ratio ≥ 0.45
- 0.62 ≤ Modeled Ratio ≤ 0.92 for 3 seconds

Action Taken When the DTC Sets

- Maximum line pressure.
- For lamp illuminate refer to DTC type definition (type B).
- Turn force motor OFF.

Conditions For Clearing The The MIL/DTC

- The PCM will turn off the MIL and CHECK TRANS Lamp after three consecutive ignition cycles without a failure reported.
- The DTC can be cleared from the PCM history by using a scan tool.
- The DTC will be cleared from history when the vehicle has achieved 40 warmup cycles without a failure reported.
- The PCM will cancel the DTC default actions when the fault no longer exists and the ignition is cycled “off” long enough to power down the PCM.

Diagnostic Aids

- Verify that the transmission meets the specifications in the 4L30–E shift speed chart.
- Other internal transmission failures may allow more than one shift to occur.

Downloaded from www.Manualslib.com manuals search engine

Test Description

The numbers below refer to the step numbers on the diagnostic chart:

2. This test checks the function of the range switch (mode switch).
3. This test checks that the scan tool commanded all shifts, all shifts solenoids responded correctly, but all the shifts did not occur.

DTC P0751 Shift Solenoid A Performance (Stuck OFF)

Step	Action	Yes	No
1	Were you sent here from the “Powertrain On–Board Diagnostic (OBD) System Check”?	Go to Step 2	Go to OBD System Check Refer to Driveability and Emissions in Engine section
2	1. Install the scan tool. 2. With the engine “off”, turn the ignition switch “on”. NOTE: Before clearing DTC(s), use the scan tool to record “Freeze Frame” and “Failure Records” for reference, as data will be lost when the “Clear Info” function is used. 3. Record the DTC “Freeze Frame” and “Failure Records”. 4. With the engine operating, apply the brake pedal and select each transmission range D1, D2, D3, D4, N, R, and P. Does each selected transmission range match the “TR Switch” on the scan tool?	Go to Step 3	Go to“Range Switch Logic Table”
3	1. While the engine is operating, raise the drive wheels. 2. With the transmission in D4 range, use the scan tool to command 1st, 2nd and 3rd, and 4th gears while accelerating the vehicle. Was a 2–3 or 1–4 only shift pattern detected? (Road testing the vehicle may be necessary).	Go to Step 4	Go to Diagnostic Aids
4	Check the shift solenoid/hydraulic circuit for: ● One or both of the shift solenoids for an internal malfunction. ● Contamination or sediment in one or both of the shift solenoids. ● Damaged seals on one or both of the shift solenoids. Refer to Solenoid (Main Case Valve Body) in Automatic Transmission (4L30–E) section. Was a problem found and corrected?	Go to Step 5	Go to Diagnostic Aids
5	1. After the repair is complete, use the scan tool to select “DTC”, then “Clear Info” function and road test the vehicle. 2. Review the scan tool “DTC Info”. Has the last test failed or is the current DTC displayed?	Begin diagnosis again Go to Step 1	Repair verified Exit DTC table

Downloaded from www.Manualslib.com manuals search engine

DTC P0752 Shift Solenoid A Performance (Stuck ON)

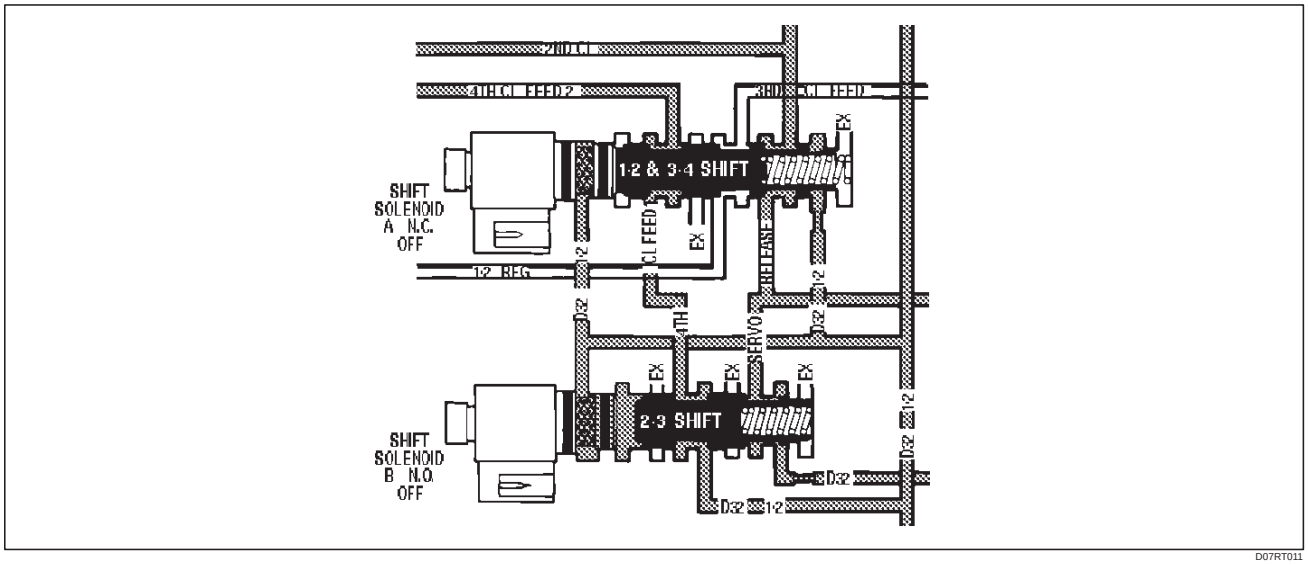

D07RT011

Circuit Description

The shift solenoid A is used to control fluid flow acting on the 1–2 and 3–4 shift valves. The solenoid is a normally close exhaust valve that is used with the shift solenoid B to allow four different shifting combinations.
The DTC detects when there is only a 2–2–3–3 shift pattern depending on the state of the mechanical failure instead of a 1–2–3–4 shift pattern. This is a type “B” DTC.

Conditions For Setting The DTC

- No ETC DTCs.
- No OSS DTCs P0722 or P0723.
- No TCC solenoid DTC P0742, P1860, P1870.
- No shift solenoid A DTC P0753.
- No shift solenoid B DTC P0758.
- Gear range is D4.
- Output speed is greater than 375 rpm.
- Transmission temperature is between 20˚ and 130˚C (68˚ and 266˚F).
- No range code P0705, P0706.
- No torque code (to be confirmed).
- Engine run for more 0 seconds and not influed cut-off (to be confirmed).

All the above conditions have been met and the combination of condition 1, 2 occur two consecutive times.

Condition 1:

- 1st gear is commanded for ≥ 1 sec
- 40 ≤ Engine Torque ≤ 400 N·m
- Throttle positon ≥ 10%
- –8000 ≤ TCC slip ≤ 8000 rpm
- Transmission out speed ≥ 375 rpm
- Speed ratio ≥ 0.3
- 1.5 ≤ Modeled Ratio ≤ 2.4 for 0.687 seconds

Condition 2:

- 4th Gear is commanded for ≥ 1 sec.
- 40 ≤ Engine Torque ≤ 400 N·m
- Trottle position ≥ 10%
- –8000 ≤ TCC slip ≤ 8000 rpm
- Speed ratio ≥ 0.6
- 0.92 ≤ Modeled Ratio ≤ 1.5 for 7 seconds

Action Taken When the DTC Sets

- Maximum line pressure.
- For lamp illuminate refer to DTC type definition (type B).
- Turn force motor OFF.

Conditions For Clearing The The MIL/DTC

- The PCM will turn off the MIL and CHECK TRANS Lamp after three consecutive ignition cycles without a failure reported.
- The DTC can be cleared from the PCM history by using a scan tool.
- The DTC will be cleared from history when the vehicle has achieved 40 warmup cycles without a failure reported.
- The PCM will cancel the DTC default actions when the fault no longer exists and the ignition is cycled “off” long enough to power down the PCM.

Diagnostic Aids

- Verify that the transmission meets the specifications in the 4L30–E shift speed chart.
- Other internal transmission failures may cause more than one shift to occur.

Downloaded from www.Manualslib.com manuals search engine

Test Description

The numbers below refer to the step numbers on the diagnostic chart:

2. This test checks the function of the range switch (mode switch).
3. This test checks that the scan tool commanded all shifts, all shifts solenoids responded correctly, but all the shifts did not occur.

DTC P0752 Shift Solenoid A Performance (Stuck ON)

Step	Action	Yes	No
1	Were you sent here from the “Powertrain On–Board Diagnostic (OBD) System Check”?	Go to Step 2	Go to OBD System Check Refer to Driveability and Emissions in Engine section
2	1. Install the scan tool. 2. With the engine “off”, turn the ignition switch “on”. NOTE: Before clearing DTC(s), use the scan tool to record “Freeze Frame” and “Failure Records” for reference, as data will be lost when the “Clear Info” function is used. 3. Record the DTC “Freeze Frame” and “Failure Records”. 4. With the engine operating, apply the brake pedal and select each transmission range D1, D2, D3, D4, N, R, and P. Does each selected transmission range match the “TR Switch” on the scan tool?	Go to Step 3	Go to“Range Switch Logic Table”
3	1. While the engine is operating, raise the drive wheels. 2. With the transmission in D4 range, use the scan tool to command 1st, 2nd and 3rd, and 4th gears while accelerating the vehicle. Was a 2–3 or 1–4 only shift pattern detected? (Road testing the vehicle may be necessary).	Go to Step 4	Go to Diagnostic Aids
4	Check the shift solenoid/hydraulic circuit for: ● One or both of the shift solenoids for an internal malfunction. ● Contamination or sediment in one or both of the shift solenoids. ● Damaged seals on one or both of the shift solenoids. Refer to Solenoid (Main Case Valve Body) in Automatic Transmission (4L30–E) section. Was a problem found and corrected?	Go to Step 5	Go to Diagnostic Aids
5	1. After the repair is complete, use the scan tool to select “DTC”, then “Clear Info” function and road test the vehicle. 2. Review the scan tool “DTC Info”. Has the last test failed or is the current DTC displayed?	Begin diagnosis again Go to Step 1	Repair verified Exit DTC table

Downloaded from www.Manualslib.com manuals search engine

DTC P0753 Shift Solenoid A Electrical

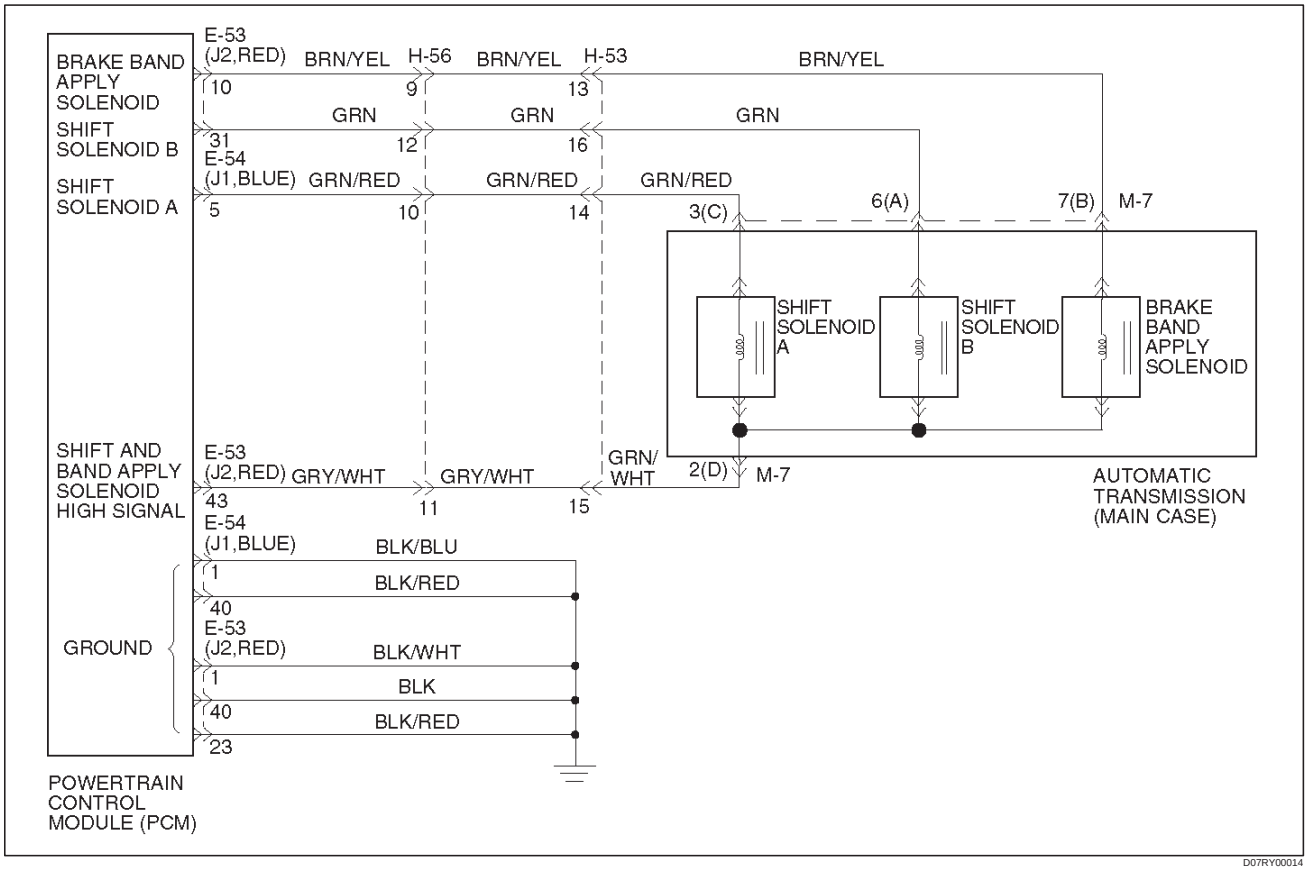

Circuit Description

- The shift solenoid A is a simple on/off solenoid located in the main case valve body. The solenoid is the normally closed type. In second or third gear, the Powertrain Control Module (PCM) energizes the solenoid to open a fluid inlet port. When the port is open, fluid pressure actuates the shift valve.
- The solenoid is activated by current. This current is produced by applying a voltage to one side (the High side) and a ground to the other side (Low side).
- The High Side Driver (HSD) is a circuit of the PCM that acts as a switch between the solenoids and the supply voltage. The High side of the solenoid is permanently supplied with voltage, except in BACKUP MODE or when ignition is off the HSD is turned off.

This DTC detects a continuous open or short to ground in the shift solenoid A circuit or the shift solenoid A. This is a type “B” DTC.

Conditions For Setting The DTC

- Ignition is “on”, Engine “run”.
- Battery voltage is between 10 and 16 volts.
- The PCM commands the solenoid “on” and the voltage remains high (B+) or the PCM commands the solenoid “off” and the voltage remains low (zero volts).
- All conditions met for 0.84 ~ 1.0 seconds.

Action Taken When The DTC Sets

- Maximum line pressure.
- Immediate landing to 4th gear.
- Inhibit TCC engagement.
- For lamp illuminate refer to DTC type definition (type B).

Conditions For Clearing The MIL/DTC

- The PCM will turn off the MIL and CHECK TRANS Lamp after three consecutive ignition cycles without a failure reported.
- The DTC can be cleared from the PCM history by using a scan tool.
- The DTC will be cleared from history when the vehicle has achieved 40 warmup cycles without a failure reported.
- The PCM will cancel the DTC default actions when the fault no longer exists and the ignition is cycled “off” long enough to power down the PCM.

Diagnostic Aids

- Inspect the wiring for poor electrical connection at the PCM and at the transmission 16–way connectors. Look for possible bent, backed out, deformed or damaged terminals. Check for weak terminal tension as well. Also check for a chafed wire that could short to bare metal or other wiring. Inspect for a broken wire inside the insulation.

Downloaded from www.Manualslib.com manuals search engine

- When diagnosing for a possible intermittent short or open condition, move the wiring harness while observing test equipment for a change.
- An open ignition feed circuit can cause multiple DTCs to set.
- A shift solenoid B DTC P0758 could also set with a shift solenoid A electrical failure.

Test Description

The numbers below refer to the step numbers on the diagnostic chart:

3. This test checks for power to the shift solenoid A from the ignition through the PCM.
5. This test measures the resistance of the component.
9. This test checks the function of the shift solenoid A and the transmission internal wiring harness.

Shift Solenoid Status Chart

Gear	Shift solenoid A	Shift solenoid B
1st	OFF	ON
2nd	ON	ON
3rd	ON	OFF
4th	OFF	OFF

DTC P0753 Shift Solenoid A Electrical

Step	Action	Yes	No
1	Were you sent here from the “Powertrain On–Board Diagnostic (OBD) System Check”?	Go to Step 2	Go to OBD System Check Refer to Driveability and Emissions in Engine section
2	1. Install the scan tool. 2. With the engine “on”, turn the ignition switch “on”. NOTE: Before clearing DTC(s), use the scan tool to record “Freeze Frame” and “Failure Records” for reference, as data will be lost when the “Clear Info” function is used. 3. Record the DTC “Freeze Frame” and “Failure Records”. Were DTCs P0753, P0758, P1860 set?	Go to Step 3	Go to Diagnostic Aids
3	1. Turn the ignition “on”. 2. Using the J39200 DVOM, measure the voltage between PCM connector terminals J2–43 and J1–1 (GND). Is the voltage within 10–12 volts?	Go to Step 4	Go to Step 5
4	1. Turn the ignition “off”. 2. Disconnect the J2 (RED) PCM connector. 3. Turn the ignition “on”. 4. Using the J39200 DVOM, measure the voltage between PCM connector terminals J1–5 and ground. Is the voltage within 10 – 12 volts?	Go to Step 11	Go to Step 5
5	1. Turn the ignition “off”. 2. Disconnect the J2 (RED) PCM connector. 3. Using the J39200 DVOM, measure the resistance between PCM connector terminals J2–43 and J1–5. Is the resistance within 18 – 20 ohms?	Go to Step 6	Go to Step 7
6	1. Disconnect the J1 (BLUE) and J2 (RED) PCM connectors. 2. Using the J39200 DVOM, check a continuity between PCM terminals J2–43 and ground. Is there a continuity?	Go to Step 12	Go to Step 8
7	1. Disconnect the 16–way harness connector H–56. 2. Using the J39200 DVOM, measure the resistance between terminals H56–11 and H56–10. Is the resistance within 18–20 ohms?	Go to Step 14	Go to Step 9

Downloaded from www.Manualslib.com manuals search engine

DTC P0753 Shift Solenoid A Electrical (Cont'd)

Step	Action	Yes	No
8	Using the J39200 DVOM, check a continuity between J2 (RED) PCM terminal 43 and ground. Is there a continuity?	Go to Step 13	Go to Step 10
9	1. Disconnect the transmission main case 7 pin connector M–7. 2. Using the J39200 DVOM, measure the resistance between terminals M7–2(D) and M7–3(C). Is the resistance within 18–20 ohms?	Go to Step 15	Go to Step 16
10	Check every connection at the PCM connector. Was a problem found?	Go to Step 18	Go to Step 17
11	The wiring harness between PCM connector terminals J1–5 and transmission harness terminal M7–3(C) is shorted to voltage. Was a problem found and corrected?	Go to Step 19	—
12	The wiring harness between PCM connector terminal J1–5 and transmission harness terminal M7–3(C) is shorted to ground. Was a problem found and corrected?	Go to Step 19	—
13	The wiring harness between PCM connector terminals J2–43 and transmission harness terminal M7–2(D) is shorted to ground. Was a problem found and corrected?	Go to Step 19	—
14	The wiring harness between PCM connector J1 or J2 and transmission 16–way connector H–56 is open or poor connection. Was a problem found and corrected?	Go to Step 19	—
15	The wiring harness between transmission 16–way connector H–56 and transmission main case connector M–7 is open or has a poor connection. Was a problem found and corrected?	Go to Step 19	—
16	The shift solenoid A is faulty. Replace the shift solenoid A. Refer to Solenoid (Main Case Valve Body) in Automatic Transmission (4L30–E) section. Is the replacement complete?	Go to Step 19	—
17	The PCM may be faulty. Replace the PCM. Refer to Powertrain Control Module (PCM) in Automatic Transmission (4L30–E) section. Is the replacement complete?	Go to Step 19	—
18	Repair the PCM connector connection. Was a problem found and corrected?	Go to Step 19	—
19	1. After the repair is complete, use the scan tool to select "DTC", then "Clear Info" function and operate the vehicle under the following conditions: ● The shift solenoid A is commanded "on" and voltage drops to zero. ● The shift solenoid A is commanded "off" and voltage increases to B+. 2. Review the scan tool "DTC Info". Has the last test failed or is the current DTC displayed?	Begin diagnosis again Go to Step 1	Repair verified Exit DTC table

Downloaded from www.Manualslib.com manuals search engine

DTC P0756 Shift Solenoid B Performance (Stuck OFF)

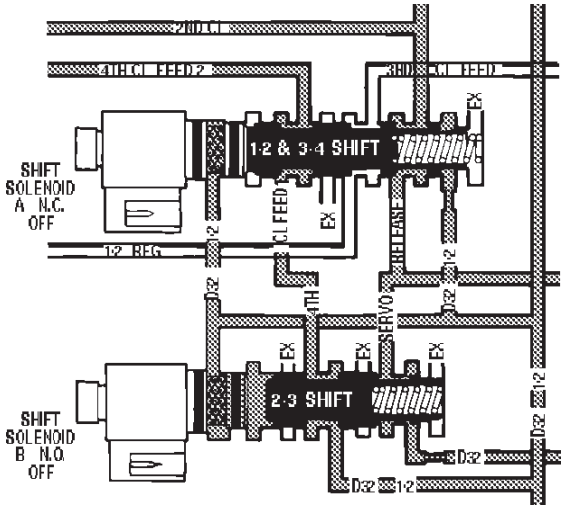

D07RT011

Circuit Description

The shift solenoid B is used to control fluid flow acting on the 2–3 shift valves. The solenoid is a normally open exhaust valve that is used with the shift solenoid A to allow four different shift combinations.

This DTC detects when there is only a 4–3–3–4 shift pattern depending on the state of the mechanical failure instead of a 1–2–3–4 shift pattren. This is a type “B” DTC.

Conditions For Setting The DTC

- No ETC DTCs.
- No OSS DTCs P0722 or P0723.
- No TCC solenoid DTC P0742, P1860., P1870.
- No shift solenoid A DTC P0753.
- No shift solenoid B DTC P0758.
- Gear range is D4.
- Output speed is greater than 375 rpm.
- Transmission fluid temperature is between 20˚ and 130˚C (68˚ and 266˚F).
- No range code P0705, P0706.
- No torque code (to be confirmed).
- Engine run for more 0 seconds and influed cut-off (to be confirmed).

All the above conditions have been met and the combination of condition 1, 2 occur two consecutive times.

Condition 1:

- 1st gear is commanded for ≥ 1 sec
- 40 ≤ Engine Torque ≤ 400 N·m
- Throttle position ≥ 10%
- –2300 ≤ TCC slip ≤ 200 rpm
- Transmission out speed ≥ 400 rpm
- Speed ratio ≥ 0.3
- 0.60 ≤ Modeled Ratio ≤ 1.49 for 1 seconds

Condition 2:

- 2nd Gear is commanded for ≥ 1 sec.
- 40 ≤ Engine Torque ≤ 400 N·m
- Trottle position ≥ 10%
- –8000 ≤ TCC slip ≤ 8000 rpm
- Speed ratio ≥ 0.6
- 0.92 ≤ Modeled Ratio ≤ 1.5 for 0.687 seconds

Action Taken When the DTC Sets

- Maximum line pressure.
- For lamp illuminate refer to DTC type definition (type B).
- Turn force motor OFF.

Conditions For Clearing The MIL/DTC

- The PCM will turn off the MIL and CHECK TRANS Lamp after three consecutive ignition cycles without a failure reported.
- The DTC can be cleared from the PCM history by using a scan tool.
- The DTC will be cleared from history when the vehicle has achieved 40 warmup cycles without a failure reported.
- The PCM will cancel the DTC default actions when the fault no longer exist and the ignition is cycled “off” long enough to power down the PCM.

Diagnostic Aids

- Verify that the transmission meets the specifications in the 4L30-E shift speed chart.
- Other internal transmission failures may allow more than one shift to occur.

Downloaded from www.Manualslib.com manuals search engine

Test Description

The numbers below refer to the step numbers on the diagnostic chart:

2. This test checks the function of the range switch (mode switch).
3. This test checks for selected gear ratio vs. a ratio not obtainable under normal driving conditions.

DTC P0756 Shift Solenoid B Performance (Stuck OFF)

Step	Action	Yes	No
1	Were you sent here from the “Powertrain On–Board Diagnostic (OBD) System Check”?	Go to Step 2	Go to OBD System Check Refer to Driveability and Emissions in Engine section
2	1. Install the scan tool. 2. With the engine “off”, turn the ignition switch “on”. NOTE: Before clearing DTC(s), use the scan tool to record “Freeze Frame” and “Failure Records” for reference, as data will be lost when the “Clear Info” function is used. 3. Record the DTC “Freeze Frame” and “Failure Records”. 4. With the engine operating, apply the brake pedal and select each transmission range D1, D2, D3, D4, N, R, and P. Does each selected transmission range match the “TR Switch” on the scan tool?	Go to Step 3	Go to “Range Switch Logic Table”
3	1. While the engine is operating, raise the drive wheels. 2. With the transmission in D4 range, use the scan tool to command 1st, 2nd, and 3rd, and 4th gears while accelerating the vehicle. Was 1st gear commanded and not achieved, or 4th gear commanded and other than 4th gear occurred? (Road testing the vehicle may be necessary.)	Go to Step 4	Go to Diagnostic Aids
4	Check the shift solenoid/hydraulic circuit for: ● One or both of the shift solenoids for an internal malfunction. ● Contamination or sediment in one or both of the shift solenoids. ● Damaged seals on the one or both of the shift solenoids. Refer to Solenoid (Main Case Valve Body) in Automatic Transmission (4L30–E) section. Was a problem found and corrected?	Go to Step 5	Go to Diagnostic Aids
5	1. After the repair is complete, use the scan tool to select “DTC”, then “Clear Info” function and road test the vehicle. 2. Review the scan tool “DTC Info”. Has the last test failed or is the current DTC displayed?	Begin diagnosis again Go to Step 1	Repair verified Exit DTC table

Downloaded from www.Manualslib.com manuals search engine

DTC P0757 Shift Solenoid B Performance (Stuck ON)

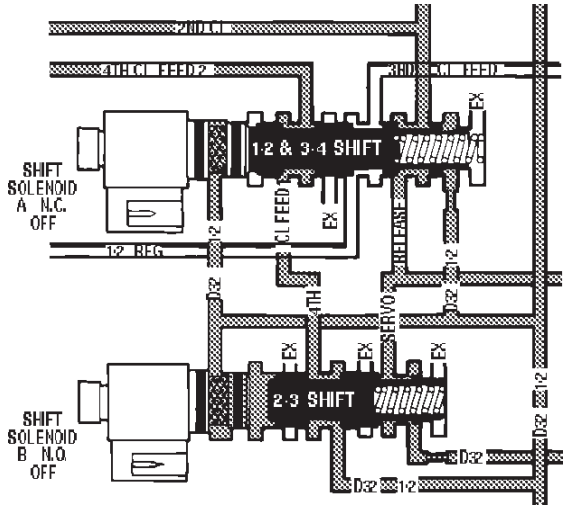

D07RT011

Circuit Description

The shift solenoid B is used to control fluid flow acting on the 2–3 shift valves. The solenoid is a normally open exhaust valve that is used with the shift solenoid A to allow four different shift combinations.

This DTC detects when there is only a 1–2–2–1 shift pattern depending on the state of the mechanical failure instead of a 1–2–3–4 shift pattern. This is a type “B” DTC.

Conditions For Setting The DTC

- No ETC DTCs.
- No OSS DTCs P0722 or P0723.
- No TCC solenoid DTC P0742, P1860, P1870.
- No shift solenoid A DTC P0753.
- No shift solenoid B DTC P0758.
- Gear range is D4.
- Output speed is greater than 375 rpm.
- Transmission fluid temperature is between 20˚ and 130˚C (68˚ and 266˚F).
- No range code P0705, P0706.
- No torque code (to be confirmed).
- Engine run for more 0 seconds and not influed cut-off (to be confirmed).

All the above conditions have been met and the combination of condition 1,2 occur two consecutive times.

Condition 1:

- 3rd gear is commanded for ≥ 1 sec
- 40 ≤ Engine Torque ≤ 400 N·m
- Throttle positon ≥ 10%
- –8000 ≤ TCC slip ≤ 8000 rpm
- Transmission out speed ≥ 375 rpm
- Speed ratio ≥ 0.6
- 1.44 ≤ Modeled Ratio ≤ 2.4 for 4 seconds

Condition 2:

- 4th Gear is commanded for ≥ 1 sec.
- 15 ≤ Engine Torque ≤ 400 N·m
- Trottle position ≥ 10%
- –8000 ≤ TCC slip ≤ 8000 rpm
- Speed ratio ≥ 0.6
- 2.75 ≤ Modeled Ratio ≤ 3.2 for 2 seconds

Action Taken When the DTC Sets

- Maximum line pressure.
- For lamp illuminate refer to DTC type definition (type B).
- Turn force motor OFF.

Conditions For Clearing The MIL/DTC

- The PCM will turn off the MIL and CHECK TRANS Lamp after three consecutive ignition cycles without a failure reported.
- The DTC can be cleared from the PCM history by using a scan tool.
- The DTC will be cleared from history when the vehicle has achieved 40 warmup cycles without a failure reported.
- The PCM will cancel the DTC default actions when the fault no longer exists and the ignition is cycled “off” long enough to power down the PCM.

Diagnostic Aids

- Verify that the transmission meets the specifications in the 4L30-E shift speed chart.
- Other internal transmission failures may cause more than one shift to occur.

Downloaded from www.Manualslib.com manuals search engine

Test Description

The numbers below refer to the step numbers on the diagnostic chart:

2. This test checks the function of the range switch (mode switch).
3. This test checks for selected gear ratio vs. a ratio not obtainable under normal driving conditions.

DTC P0757 Shift Solenoid B Performance (Stuck ON)

Step	Action	Yes	No
1	Were you sent here from the “Powertrain On–Board Diagnostic (OBD) System Check”?	Go to Step 2	Go to OBD System Check Refer to Driveability and Emissions in Engine section
2	1. Install the scan tool. 2. With the engine “off”, turn the ignition switch “on”. NOTE: Before clearing DTC(s), use the scan tool to record “Freeze Frame” and “Failure Records” for reference, as data will be lost when the “Clear Info” function is used. 3. Record the DTC “Freeze Frame” and “Failure Records”. 4. With the engine operating, apply the brake pedal and select each transmission range D1, D2, D3, D4, N, R, and P. Does each selected transmission range match the “TR Switch” on the scan tool?	Go to Step 3	Go to “Range Switch Logic Table”
3	1. While the engine is operating, raise the drive wheels. 2. With the transmission in D4 range, use the scan tool to command 1st, 2nd, and 3rd, and 4th gears while accelerating the vehicle. Was 1st gear commanded and not achieved, or 4th gear commanded and other than 4th gear occurred? (Road testing the vehicle may be necessary.)	Go to Step 4	Go to Diagnostic Aids
4	Check the shift solenoid/hydraulic circuit for: ● One or both of the shift solenoids for an internal malfunction. ● Contamination or sediment in one or both of the shift solenoids. ● Damaged seals on the one or both of the shift solenoids. Refer to Solenoid (Main Case Valve Body) in Automatic Transmission (4L30–E) section. Was a problem found and corrected?	Go to Step 5	Go to Diagnostic Aids
5	1. After the repair is complete, use the scan tool to select “DTC”, then “Clear Info” function and road test the vehicle. 2. Review the scan tool “DTC Info”. Has the last test failed or is the current DTC displayed?	Begin diagnosis again Go to Step 1	Repair verified Exit DTC table

Downloaded from www.Manualslib.com manuals search engine

DTC P0758 Shift Solenoid B Electrical

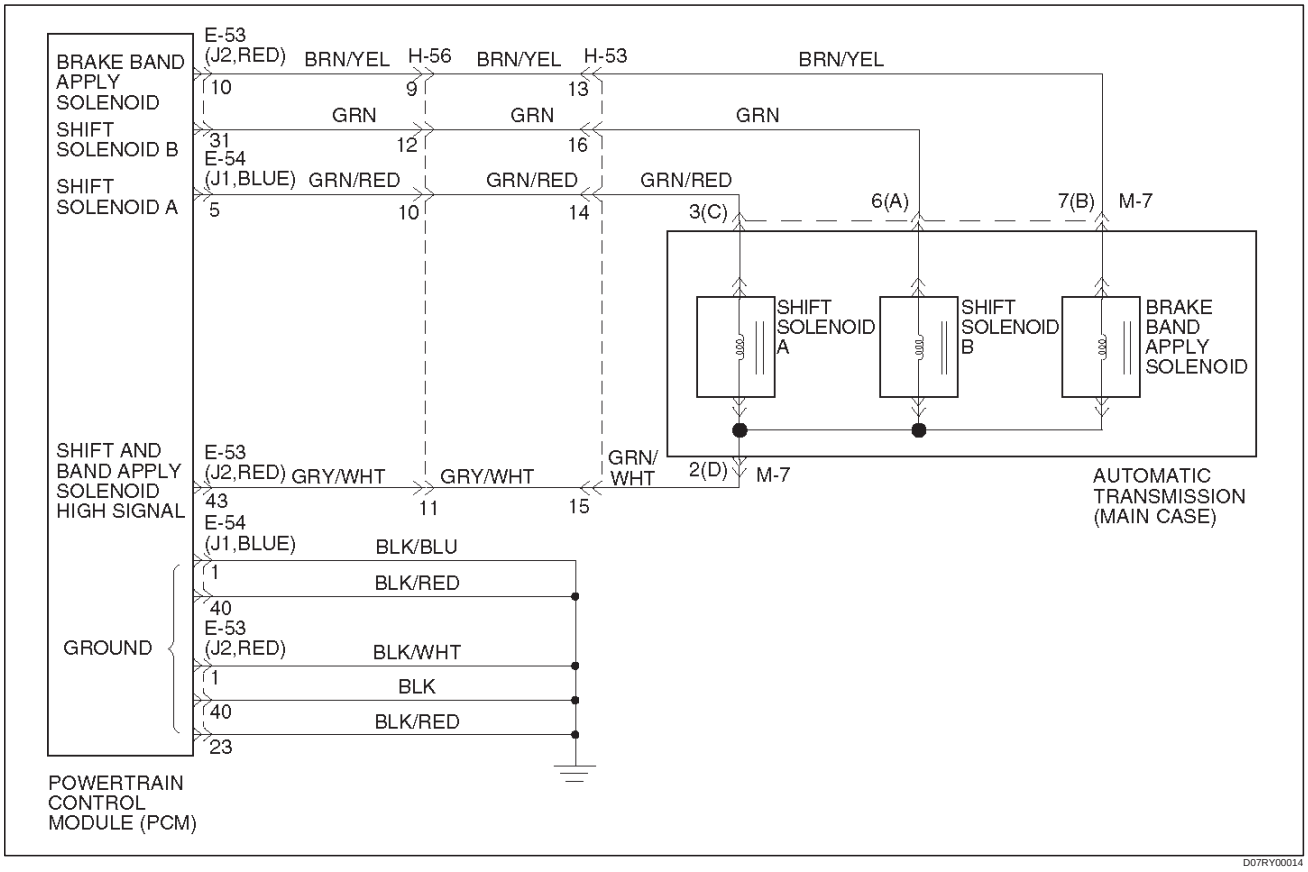

Circuit Description

- The shift solenoid B is a simple on/off solenoid located in the main case valve body. It is normally open. When the port is open, fluid pressure actuates the shift valve. In first or second gear, the Powertrain Control Module (PCM) energizes the solenoid to close a fluid inlet port.
- The solenoid is activated by current. This current is produced by applying a voltage to one side (the High side) and a ground to the other side (Low side).
- The High Side Driver (HSD) is a circuit of the PCM that acts as a switch between the solenoids and the supply voltage. The High side of the solenoid is permanently supplied with voltage. In BACKUP MODE or when the ignition is off, the HSD is turned off.

This DTC detects a continuous open or short to ground in the shift solenoid B circuit or shift solenoid B. This is a type “B” DTC.

Conditions For Setting The DTC

- Ignition is “on”, Engine “run”.
- Battery voltage is between 10 and 16 volts.
- The PCM commands the solenoid “on” and the voltage remains high (B+)or the PCM commands the solenoid “off” and the voltage remains low (zero volts).
- All conditions met for 0.84 ~ 1.0 seconds.

Action Taken When The DTC Sets

- Fixed to 4th gear.
- Maximum line pressure.
- Inhibit TCC engagement.
- The PCM will illuminate the Malfunction Indicator Lamp (MIL) and CHECK TRANS Lamp.

Conditions For Clearing The MIL/DTC

- The PCM will turn off the MIL and CHECK TRANS Lamp after three consecutive ignition cycles without a failure reported.
- The DTC can be cleared from the PCM history by using a scan tool.
- The DTC will be cleared from history when the vehicle has achieved 40 warmup cycles without a failure reported.
- The PCM will cancel the DTC default actions when the fault no longer exists and the ignition is cycled “off” long enough to power down the PCM.

Diagnostic Aids

- Inspect the wiring for poor electrical connections at the PCM and at the transmission 16–way connector. Look for possible bent, backed out, deformed or damaged terminals. Check for weak terminal tension as well. Also check for a chafed wire that could short to bare metal or other wiring. Inspect for a broken wire inside the insulation.

Downloaded from www.Manualslib.com manuals search engine

- When diagnosing for a possible intermittent short or open condition, move the wiring harness while observing test equipment for a change.

Test Description

The numbers below refer to the step numbers on the diagnostic chart:

5. This test measures the resistance of the component.
7. This test checks the function of the shift solenoid B and the transmission internal wiring harness.
11. This test checks for power to the shift solenoid B from the ignition through the PCM.

Shift Solenoid Status Chart

Gear	Shift solenoid A	Shift solenoid B
1st	OFF	ON
2nd	ON	ON
3rd	ON	OFF
4th	OFF	OFF

DTC P0758 Shift Solenoid B Electrical

Step	Action	Yes	No
1	Were you sent here from the “Powertrain On–Board Diagnostic (OBD) System Check”?	Go to Step 2	Go to OBD System Check Refer to Driveability and Emissions in Engine section
2	1. Install the scan tool. 2. With the engine “on”, turn the ignition switch “on”. NOTE: Before clearing DTC(s), use the scan tool to record “Freeze Frame” and “Failure Records” for reference, as data will be lost when the “Clear Info” function is used. 3. Record the DTC “Freeze Frame” and “Failure Records”. Were DTCs P0753, P0758, P1860 set?	Go to Step 4	Go to Step 3
3	1. The engine “on”. 2. Apply brake pedal and select transmission range “D”. 3. Press and hold down the winter switch and select transmission mode “winter”. Does the scan tool display DTC P0758 at 3rd gear?	Go to Step 8	Go to Diagnostic Aids
4	1. Turn the ignition “off”. 2. Disconnect the J1 (BLUE) and J2 (RED) PCM connectors. 3. Turn the ignition “on”. 4. Using the J39200 DVOM, measure the voltage between PCM connector terminals J2–31 and J1–1. Is the voltage within 10 – 12 volts?	Go to Step 15	Go to Step 5
5	1. Turn the ignition “off”. 2. Using the J39200 DVOM, measure the resistance between PCM connector terminals J2–43 and J2–31. Is the resistance within 18 – 20 ohms?	Go to Step 16	Go to Step 6
6	1. Disconnect the transmission 16–way connector H–56. 2. Using the J39200 DVOM, measure the resistance between terminals H56–11 and H56–12. Is the resistance within 18 – 20 ohms?	Go to Step 17	Go to Step 7
7	1. Disconnect the transmission main case connector M–7. 2. Using the J39200 DVOM, measure the resistance between terminals M7–2(D) and M7–6(A). Is the resistance within 18 – 20 ohms?	Go to Step 18	Go to Step 19

Downloaded from www.Manualslib.com manuals search engine

DTC P0758 Shift Solenoid B Electrical (Cont'd)

Step	Action	Yes	No
8	1. Turn the ignition "off". 2. Disconnect the J1 (BLUE) and J2 (RED) PCM connectors. 3. Using the J39200 DVOM, measure the resistance between PCM connector terminals J2–43 and J2–31. Is the resistance within 18 – 20 ohms?	Go to Step 9	Go to Step 10
9	Using the J39200 DVOM, check a continuity between PCM connector terminal J2–31 and ground. Is there a continuity?	Go to Step 20	Go to Step 11
10	1. Disconnect the transmission 16–way connector H–56. 2. Using the J39200 DVOM, measure the resistance between terminals H56–11 and H56–12. Is the resistance within 18–20 ohms?	Go to Step 21	Go to Step 12
11	Using the J39200 DVOM, check a continuity between PCM connector terminal J2–43 and ground. Is there a continuity?	Go to Step 22	Go to Step 13
12	1. Disconnect the transmission main case connector M–7. 2. Using the J39200 DVOM, measure the resistance between terminals M7–2(D) and M7–6(A). Is the resistance within 18 – 20 ohms?	Go to Step 23	Go to Step 24
13	Check every connection of the PCM and transmission 16–way connector H–56. Was a problem found and corrected?	Go to Step 26	Go to Step 14
14	1. Connect the J1 (BLUE) and J2 (RED) PCM connectors to the PCM. 2. Turn the ignition "on", the engine "on". 3. Repeat Step 3. Does the scan tool display DTC P0758 at 3rd gear?	Go to Step 25	Go to Diagnostic Aids
15	The wiring harness between PCM connector terminal J2–31 and transmission main case terminal M7–6(A) is shorted to voltage. Was a problem found and corrected?	Go to Step 26	—
16	The PCM internal terminal J2–31 is shorted to voltage. Replace the PCM. Refer to Powertrain Control Module (PCM) in Automatic Transmission (4L30–E) section. Is the replacement complete?	Go to Step 26	—
17	The wiring harness between PCM connector and transmission 16–way connector is shorted. Was a problem found and corrected?	Go to Step 26	—
18	The wiring harness between transmission 16–way connector and transmission main case connector is shorted. Was a problem found and corrected?	Go to Step 26	—
19	The shift solenoid B is faulty, or the internal wiring harness from the shift solenoid B is shorted. Was a problem found and corrected?	Go to Step 26	—
20	The wiring harness between PCM connector terminal J2–31 and transmission main case connector terminal M7–6(A) is shorted to ground. Was a problem found and corrected?	Go to Step 26	—

Downloaded from www.Manualslib.com manuals search engine

DTC P0758 Shift Solenoid B Electrical (Cont'd)

Step	Action	Yes	No
21	The wiring harness between PCM connector terminal J2–31 and transmission 16–way connector terminal H56–12, or between PCM connector terminal J2–43 and 16–way connector terminal H56–11 is open. Was a problem found and corrected?	Go to Step 26	—
22	The wiring harness between PCM connector terminal J2–43 and transmission main case connector terminal M7–2(D) is shorted to ground. Was a problem found and corrected?	Go to Step 26	—
23	The wiring harness between transmission 16–way connector terminal H56–12 and transmission main case connector terminal M7–6(A), or between H56–11 and M7–2(D) is open. Was a problem found and corrected?	Go to Step 26	—
24	The internal wiring harness from the shift solenoid B is open, or the shift solenoid B is faulty. Was a problem found and corrected?	Go to Step 26	—
25	Replace the PCM. Is the replacement complete?	Go to Step 26	—
26	1. After the repair is complete, use the scan tool to select "DTC", then "Clear Info" function and operate the vehicle under the following conditions: ● The shift solenoid B is commanded "on" and voltage drop to zero. ● The shift solenoid B is commanded "off" and voltage increases to B+. 2. Review the scan tool "DTC Info". Has the last test failed or is the current DTC displayed?	Begin diagnosis again Go to Step 1	Repair verified Exit DTC table

Downloaded from www.Manualslib.com manuals search engine

DTC P1850 Brake Band Apply Solenoid Malfunction

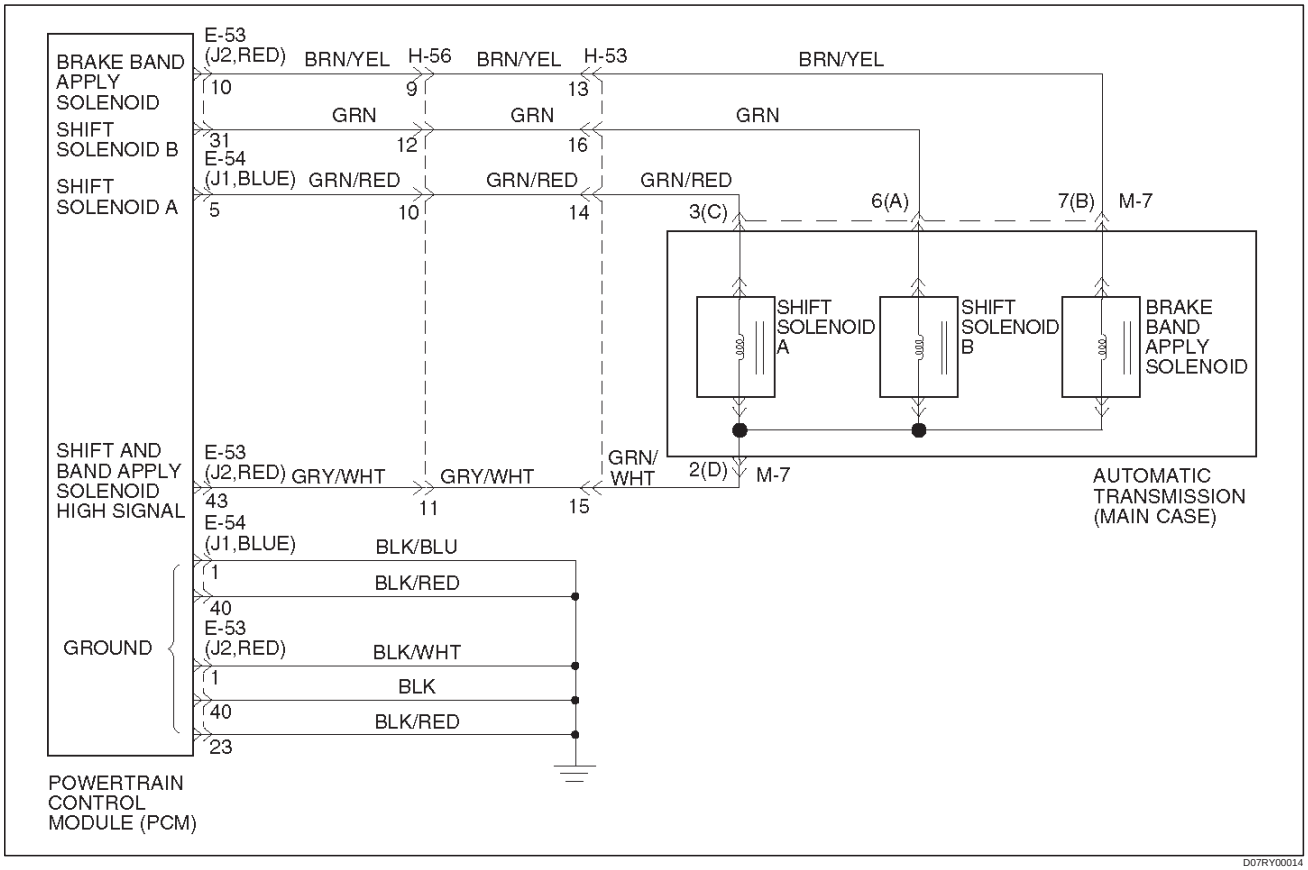

Circuit Description

- The brake band apply solenoid is a normally open solenoid which controls the flow of fluid for brake band application. The Powertrain Control Module (PCM) uses Pulse Width Modulation (PWM) and changes the duty cycle to control the solenoid. The PCM turns the solenoid on (energized) and off (deenergized) at a constant frequency. The length of time the solenoid is energized during each on/off cycle is called the pulse width. By varying or “modulating” the pulse width, the solenoid output pressure is changed. Since the solenoid is normally open, increasing the pulse width increases the duty cycle and decreases the output pressure. PWM control provides smooth band application without an accumulator. The band is only applied in first and second gears.
- In the event of an electrical failure (open), the solenoid regulates at the maximum oil flow (0% duty cycle).
- The solenoid is activated by current. This current is produced by applying a voltage to one side (the High side) and a ground to the other side (Low side).
- The High Side Driver (HSD) is a circuit of the PCM that acts as a switch between the solenoids and the supply voltage. The High side of the solenoid is permanently supplied with voltage. When the ignition is off, the HSD is turned off.

This DTC detects a continuous open or short to ground in the brake band apply solenoid circuit or the brake band apply solenoid. This is a type “D” DTC.

Conditions For Setting The DTC

- Battery voltage is between 10 and 16 volts.
- Ignition is “on”, Engine “run”.
- The PCM commands the solenoid “on” and the voltage remains high (B+) or the PCM commands the solenoid “off” and the voltage remains low (zero volts).
- All conditions met in 1.34 ~ 1.56 seconds.

Action Taken When The DTC Sets

- Inhibit brake band apply solenoid.
- The PCM will not illuminate the Malfunction Indicator Lamp (MIL).

Conditions For Clearing The DTC

- The DTC can be cleared from the PCM history by using a scan tool.
- The DTC will be cleared from history when the vehicle has achieved 40 warmup cycles without a failure reported.
- The PCM will cancel the DTC default actions when the fault no longer exists and the ignition is cycled “off” long enough to power down the PCM.

Downloaded from www.Manualslib.com manuals search engine

Diagnostic Aids

- Inspect the wiring for poor electrical connection at the PCM and at the transmission 16–way connectors. Look for possible bent, backed out, deformed or damaged terminals. Check for weak terminal tension as well. Also check for a chafed wire that could short to bare metal or other wiring. Inspect for a broken wire inside the insulation.
- When diagnosing for a possible intermittent short or open condition, move the wiring harness while observing test equipment for a change.

Test Description

The numbers below refer to the step numbers on the diagnostic chart:

3. This test checks for power to the brake band apply solenoid from the ignition through the PCM.
4. This test checks the resistance of the transmission internal wiring harness and brake band apply solenoid.
5. This test checks the ability of the PCM and wiring to control the ground circuit.

DTC P1850 Brake Band Apply Solenoid Malfunction

Step	Action	Yes	No
1	Were you sent here from the “Powertrain On–Board Diagnostic (OBD) System Check”?	Go to Step 2	Go to OBD System Check Refer to Driveability and Emissions in Engine section
2	1. Install the scan tool. 2. With the engine “on”, turn the ignition switch “on”. NOTE: Before clearing DTC(s), use the scan tool to record “Freeze Frame” and “Failure Records” for reference, as data will be lost when the “Clear Info” function is used. 3. Record the DTC “Freeze Frame” and “Failure Records”. Were DTCs P0753, P0758 set?	Go to Step 3	Go to Step 4
3	Using the J39200 DVOM, back probe between PCM connector terminals J2–43 and J1–1. Is the voltage between 10 to 12 volts?	Go to Step 5	Go to Step 6
4	1. Turn the ignition “off”. 2. Disconnect the J1 (BLUE) and J2 (RED) PCM connectors. 3. Using the J39200 DVOM, measure the resistance between PCM connector terminals J2–43 and J2–10. Is the resistance within 10–12 ohms?	Go to Step 12	Go to Step 13
5	Using the J39200 DVOM, back probe between PCM connector terminals J2–10 and J1–1. Is the voltage between 10 to 12 volts?	Go to Step 26	Go to Step 4
6	1. Turn the ignition “off”. 2. Disconnect the J1 (BLUE) and J2 (RED) PCM connectors. 3. Using the J39200 DVOM, check continuity between PCM terminal J2–43 and ground. Is there a continuity?	Go to Step 7	Go to Step 9
7	1. Disconnect the transmission 16–way connector H–56. 2. Using the J39200 DVOM, check continuity between connector H56–9 and ground. Is there a continuity?	Go to Step 8	Go to Step 17
8	1. Disconnect the transmission main case connector M–7. 2. Using the J39200 DVOM, check continuity between the terminal M7–7(B) and ground. Is there a continuity?	Go to Step 18	Go to Step 19

Downloaded from www.Manualslib.com manuals search engine

DTC P1850 Brake Band Apply Solenoid Malfunction (Cont'd)

Step	Action	Yes	No
9	1. Disconnect the J1 (BLUE) and J2 (RED) PCM Connector. 2. Using the J39200 DVOM, measure the resistance between PCM connector terminals J2–43 and J2–10. Is the resistance within 10–12 ohms?	Go to Step 26	Go to Step 10
10	1. Disconnect the transmission 16–way connector H–56. 2. Using the J39200 DVOM, measure the resistance between terminal H56–11 and H56–9. Is the resistance within 10–12 ohms?	Go to Step 17	Go to Step 11
11	1. Disconnect the transmission main case connector M–7. 2. Using the J39200 DVOM, measure the resistance between terminals M7–2(D) and M7–7(B). Is the resistance within 10–12 ohms?	Go to Step 20	Go to Step 21
12	Using the J39200 DVOM, check continuity between PCM terminal J2–10 and ground. Is there a continuity?	Go to Step 14	Go to Step 26
13	1. Disconnect the transmission 16–way connector H–56. 2. Using the J39200 DVOM, measure the resistance between terminal H56–11 and H56–9. Is the resistance within 10–12 ohms?	Go to Step 24	Go to Step 15
14	1. Disconnect the transmission 16–way connector H–56. 2. Using the J39200 DVOM, check continuity between terminal H56–9 and ground. Is there a continuity?	Go to Step 16	Go to Step 22
15	1. Disconnect the transmission main case connector M–7. 2. Using the J39200 DVOM, measure the resistance between terminals M7–2(D) and M7–7(B). Is the resistance within 10–12 ohms?	Go to Step 25	Go to Step 21
16	1. Disconnect the transmission main case connector M–7. 2. Using the J39200 DVOM, check continuity between the terminal M7–7(B) and ground. Is there a continuity?	Go to Step 18	Go to Step 23
17	The wiring harness between PCM terminal J2–43 and transmission 16–way connector terminal H56–11 is open. Was a problem found and corrected?	Go to Step 27	—
18	The brake band apply solenoid is faulty, or the internal wiring harness from the brake band apply solenoid is shorted to ground. Was a problem found and corrected?	Go to Step 27	—
19	The wiring harness between the transmission 16–way connector terminal H56–11 and the transmission main case connector terminal M7–2(D) is shorted to ground. Was a problem found and corrected?	Go to Step 27	—
20	The wiring harness between the transmission 16–way connector terminal H56–11 and the transmission main case connector terminal M7–2(D) is open. Was a problem found and corrected?	Go to Step 27	—
21	The brake band apply solenoid is faulty, or the internal wiring harness from the brake band apply solenoid is open. Was a problem found and corrected?	Go to Step 27	—

Downloaded from www.Manualslib.com manuals search engine

DTC P1850 Brake Band Apply Solenoid Malfunction (Cont'd)

Step	Action	Yes	No
22	The wiring harness between the PCM connector terminal J2–10 and transmission 16–way connector terminal H56–9 is shorted to ground. Was a problem found and corrected?	Go to Step 27	—
23	The wiring harness between the transmission 16–way connector terminal H56–9 and the transmission main case connector terminal M7–7(B) is shorted to ground. Was a problem found and corrected?	Go to Step 27	—
24	The wiring harness between the PCM connector terminal J2–10 and the 16–way connector terminal H56–9 is open. Was a problem found and corrected?	Go to Step 27	—
25	The wiring harness between the transmission 16–way connector terminal H56–9 and the transmission main case connector terminal M7–7(B) is open. Was a problem found and corrected?	Go to Step 27	—
26	Check every connection at the PCM. If OK, replace the PCM. Refer to Powertrain Control Module (PCM) in Automatic Transmission (4L30–E) section. Is the replacement complete?	Go to Step 27	—
27	1. After the repair is complete, use the scan tool to select "DTC", then "Clear Info" function and ensure the following conditions are met: ● The brake band apply solenoid is commanded "on" and the volts drop to zero. ● The brake band apply solenoid is commanded "off" and the volts increase to B+. 2. Review the scan tool "DTC Info". Has the last test failed or is the current DTC displayed?	Begin diagnosis again Go to Step 1	Repair verified Exit DTC table

Downloaded from www.Manualslib.com manuals search engine

DTC P1860 TCC PWM Solenoid Electrical

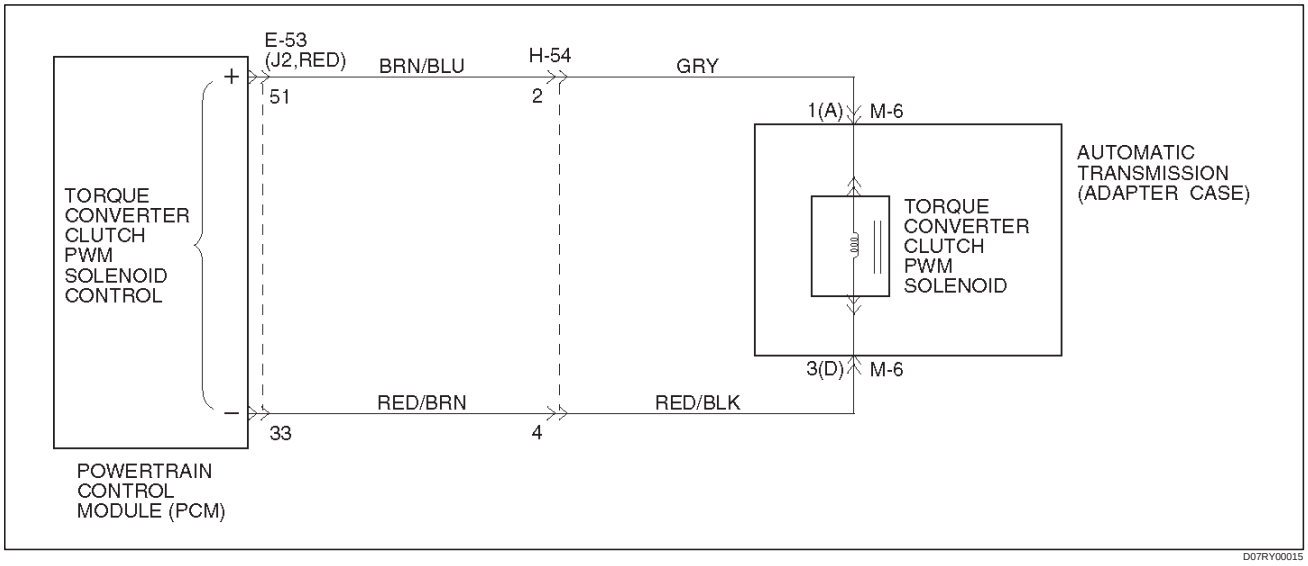

Circuit Description

The PCM allows current to flow through the solenoid coil according to the duty cycle (percentage of “on” and “off” time). This current flow through the solenoid coil creates a magnetic field that magnetizes the solid core. The magnetized core attracts the check ball to seat against spring pressure. This blocks the exhaust for the TCC signal fluid and allows solenoid feed drive fluid to feed to TCC signal circuit. The TCC signal fluid pressure acts on the TCC regulator valve to regulate line pressure and to apply fluid pressure to the torque converter clutch shift control valve. When the TCC control valve is in the apply position, regulated apply fluid pressure is directed through the TCC valve to apply the torque converter clutch. The TCC PWM solenoid is used in conjunction with the TCC reglator valve to regulate fluid to the torque converter. The TCC PWM solenoid is attached to the valve body within the transmission.

This DTC detects a continuous open or short to ground or ignition in the TCC circuit or the TCC PWM solenoid. This is a type “B” DTC.

Conditions For Setting The DTC

- Battery voltage is between 10 and 16 volts.
- No shift solenoid A DTCs P0751 or P0752 or P0753.
- No shift solenoid B DTCs P0756 or P0757 or P0758.
- Ignition is “on”, Engine “run”.
- The PCM commands the solenoid “on” and the voltage remains low (zero volts).
- The PCM commands the solenoid “off” and the voltage remains high (B+).
- All conditions met for 0.875 ~ 1.25 seconds.

Action Taken When The DTC Sets

- Inhibit TCC engagement.
- For lamp illuminate refer to DTC type definition (type B).

Conditions For Clearing The MIL/DTC

- The PCM will turn off the MIL and CHECK TRANS Lamp after three consecutive ignition cycles without a failure reported.
- The DTC can be cleared from the PCM history by using a scan tool.
- The DTC will be cleared from history when the vehicle has achieved 40 warmup cycles without a failure reported.
- The PCM will cancel the DTC default actions when the fault no longer exists and the ignition is cycled “off” long enough to power down the PCM.

Diagnostic Aids

- Inspect the wiring for poor electrical connections at the PCM and at the transmission connector. Look for possible bent, backed out, deformed or damaged terminals. Check for weak terminal tension as well. Also check for a chafed wire that could short to bare metal or other wiring. Inspect for a broken wire inside the insulation.
- When diagnosing for a possible intermittent short or open condition, move the wiring harness while observing test equipment for a change.

Test Description

The numbers below refer to the step numbers on the diagnostic chart:

3. This test checks for voltage to the solenoid.
4. This test checks the ability of the PCM and wiring to control the ignition circuit.
9. This test checks the resistance of the TCC solenoid and the internal wiring harness.

Downloaded from www.Manualslib.com manuals search engine

DTC P1860 TCC PWM Solenoid Electrical

Step	Action	Yes	No
1	Were you sent here from the “Powertrain On–Board Diagnostic (OBD) System Check”?	Go to Step 2	Go to OBD System Check Refer to Driveability and Emissions in Engine section
2	1. Install the scan tool. 2. With the engine “on”, turn the ignition switch “on”. NOTE: Before clearing DTC(s), use the scan tool to record “Freeze Frame” and “Failure Records” for reference, as data will be lost when the“Clear Info” function is used. 3. Record the DTC “Freeze Frame” and “Failure Records”.	Go to Step 3	Go to Step 4
3	Using the J39200 DVOM, back probe between PCM connector terminals J2–51 and J2–33. Is the voltage 0 ?	Go to Step 5	Go to Step 6
4	1. Apply brake pedal and select transmission range “D”. 2. Do a test drive, and increase the vehicle speed to TCC “on” at 4th. Does the scan tool display DTC P1860 at TCC “ON”?	Go to Step 10	Go to Diagnostic Aids
5	1. Turn the ignition “off”. 2. Disconnect the J2 (RED) PCM connector. 3. Using the J39200 DVOM, measure the resistance between PCM connector terminals J2–51 and J2–33. Is the resistance 10±0.5 ohms at 20˚C (68˚F) ?	Go to Step 7	Go to Step 8
6	The wiring harness between PCM connector terminal J2–51 and transmission adapter case connector terminal M6–1(A) is shorted to voltage. Was a problem found and corrected?	Go to Step 19	Go to Step 20
7	Intermittent condition. Check the wiring harness and terminals between PCM connector J2 and transmission adapter case connector M–6. Was a problem found and corrected?	Go to Step 19	Go to Step 20
8	1. Disconnect the transmission 4–way connector H–54. 2. Using the J39200 DVOM, measure the resistance between terminal H54–2 and ground. Is the resistance 10±0.5 ohms at 20˚C (68˚F) ?	Go to Step 16	Go to Step 9
9	1. Disconnect the transmission adapter case connector M–6. 2. Using the J39200 DVOM, measure the resistance between terminal M6–1(A) and ground. Is the resistance 10±0.5 ohms at 20˚C (68˚F) ?	Go to Step 17	Go to Step 18
10	1. Turn the ignition “off”. 2. Disconnect the J2 (RED) PCM connector. 3. Using the J39200 DVOM, measure the resistance between terminals J2–51 and J2–33. Is the resistance 10±0.5 ohms at 20˚C (68˚F) ?	Go to Step 19	Go to Step 11
11	1. Disconnect the transmission 4–way connector H–54. 2. Using the J39200 DVOM, measure the resistance between terminal H54–2 and ground. Is the resistance 10±0.5 ohms at 20˚C (68˚F) ?	Go to Step 13	Go to Step 12

Downloaded from www.Manualslib.com manuals search engine

DTC P1860 TCC PWM Solenoid Electrical (Cont'd)

Step	Action	Yes	No
12	1. Disconnect the transmission adapter case connector M–6. 2. Using the J39200 DVOM, measure the resistance between terminal M6–1(A) and ground. Is the resistance 10±0.5 ohms at 20˚C (68˚F) ?	Go to Step 14	Go to Step 15
13	The wiring harness between PCM connector terminal J2–51 and transmission 4–way connector terminal H54–2 is shorted to ground. Was a problem found and corrected?	Go to Step 21	—
14	The wiring harness between transmission 4–way connector H–54 and adapter case connector M–6 is shorted to ground. Was a problem found and corrected?	Go to Step 21	—
15	The TCC solenoid is faulty, or the internal wiring harness from the TCC solenoid is shorted to ground. Was a problem found and corrected?	Go to Step 21	—
16	The wiring harness between PCM connector terminal J2–51 and transmission 4–way connector terminal H54–2 is open. Was a problem found and corrected?	Go to Step 21	—
17	The wiring harness between transmission 4–way connector terminal H54–2 and adapter case terminal M6–1(A) is open. Was a problem found and corrected?	Go to Step 21	—
18	The TCC solenoid is faulty, or the internal wiring harness from the TCC solenoid is open. Was a problem found and corrected?	Go to Step 21	—
19	Check every connection at the PCM. If OK, replace the PCM. Refer to Powertrain Control Module (PCM) in Automatic Transmission (4L30–E) section. Is the replacement complete?	Go to Step 21	—
20	Check the PCM connector terminal J2–51, transmission 4–way connector terminal H54–2 and transmission adapter case connector terminal M6–1(A). Was a problem found and corrected?	Go to Step 21	—
21	1. After the repair is complete, use the scan tool to select "DTC", then "Clear Info" function and ensure the following conditions are met: ● The TCC solenoid is commanded "on" and the volts increase to B+. ● The TCC solenoid is commanded "off" and the volts drop to zero. 2. Review the scan tool "DTC Info". Has the last test failed or is the current DTC displayed?	Begin diagnosis again Go to Step 1	Repair verified Exit DTC table

Downloaded from www.Manualslib.com manuals search engine

DTC P1870 Transmission Component Slipping (TCC Stuck OFF)

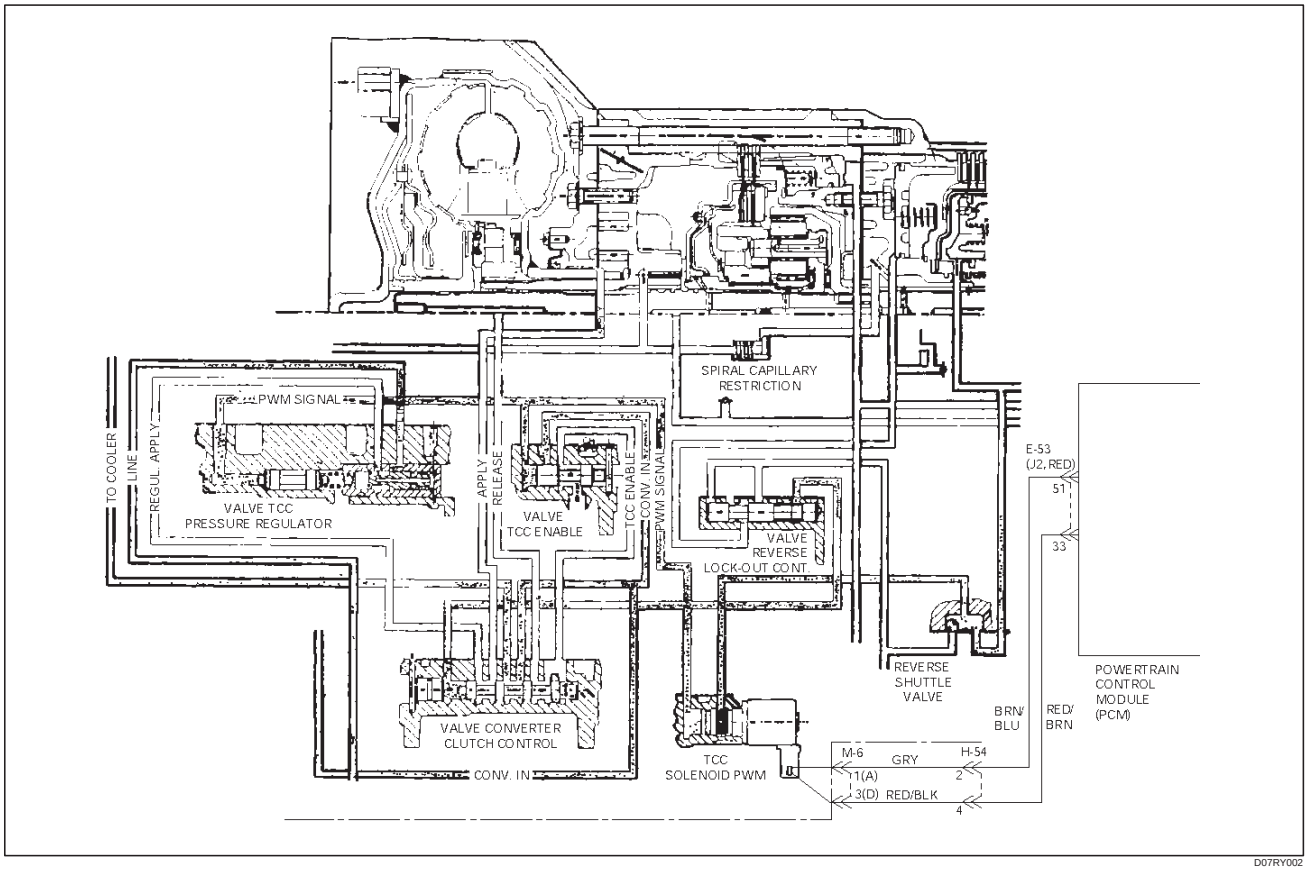

Circuit Description

The PCM monitors the difference in engine speed and transmission output speed. For example in D3 drive range with the ECCC commanded, the engine speed should closely match transmission output speed.
This DTC detects excessive TCC slip when the ECCC is engaged. This is a type “B” DTC.

Conditions For Setting The DTC

The following conditions are met for three TCC cycles with reported excessive TCC slip conditions.

- No OSS DTCs P0722 or P0723.
- No shift solenoid A DTCs P0751 or P0752 or P0753.
- No shift solenoid B DTCs P0756 or P0757 or P0758.
- No TCC solenoid DTCs P0742 or P1860 or P1870.
- Engine speed is between 1,000 and 3,500 rpm for 0.5 seconds.
- Gear range is D4.
- 13% < TPS < 99%
- 50 < Engine Torque < 300 N·m
- TFT is between 20˚ and 150˚C (68˚ and 302˚F).
- TCC slip speed is between 250 rpm and 800 rpm for 3 times 7 seconds.
- Vehicle speed is between 25 km/h (15 mph) and 225 km/h (158 mph).
- Speed ratio is between 0.6 and 0.95.
- ECCC is “ON”.
- Low (0.8) < TCC Capacity < hi (0.99) for 5 seconds

Action Taken When The DTC Sets

- Only stored in memory.
- For lamp illuminate refer to DTC type definition (type B).

Conditions For Clearing The MIL/DTC

- The PCM will turn off the MIL and CHECK TRANS Lamp after three consecutive ignition cycles without a failure reported.
- The DTC can be cleared from the PCM history by using a scan tool.
- The DTC will be cleared from history when the vehicle has achieved 40 warmup cycles without a failure reported.
- The PCM will cancel the DTC default actions when the fault no longer exist and the ignition is cycled “off” long enough to power down the PCM.

Diagnostic Aids

- Range switch malfunction could set a DTC P1870.
- A mechanical failure of the shift solenoids, TCC solenoid, or TCC PWM solenoid could set a DTC P1870.
- Internal transmission failures may set a DTC P1870.
- An intermittent or incorrect engine speed signal may set a DTC P1870.

Downloaded from www.Manualslib.com manuals search engine

Test Description

The numbers below refer to the step numbers on the diagnostic chart:

2. This test checks the indicated range signal to the actual selected range. A faulty switch could set a DTC P1870.
3. This test checks the torque converter for slippage while in a commanded lockup state.

Range Switch Logic Table

Range Position	Range Switch Pin			
	A	B	C	P(G)
Park	ON	OFF	OFF	ON
Reverse	ON	ON	OFF	OFF
Neutral	OFF	ON	OFF	ON
D4	OFF	ON	ON	OFF
D3	ON	ON	ON	ON
2	ON	OFF	ON	OFF
L	OFF	OFF	ON	ON
Illegal	OFF	OFF	OFF	OFF
Illegal	OFF	OFF	OFF	ON

DTC P1870 Transmission Component Slipping (TCC Stuck OFF)

Step	Action	Yes	No
1	Were you sent here from the “Powertrain On–Board Diagnostic (OBD) System Check”?	Go to Step 2	Go to OBD System Check Refer to Driveability and Emissions in Engine section
2	1. Install the scan tool. 2. With the engine “off”, turn the ignition switch “on”. NOTE: Before clearing DTC(s), use the scan tool to record “Freeze Frame” and “Failure Records” for reference, as data will be lost when the “Clear Info” function is used. 3. Record the DTC “Freeze Frame” and “Failure Records”. 4. Apply the brake pedal. 5. Select each transmission range: D1, D2, D3, D4, N, R, and P. Does each selected transmission range match the scan tool “TR Switch” display?	Go to Step 3	Go to “Range Switch Logic Table”
3	Drive the vehicle in 4th gear while the TCC is engaged. At any time is the “TCC Slip Speed” greater than 130 rpm for 8 seconds while the TCC is engaged?	Go to System Diagnosis Charts	Go to Diagnostic Aids

Downloaded from www.Manualslib.com manuals search engine

Connector List

No.	Connector face	No.	Connector face
B-13		H-41	(BLACK)
E-53 (J2)	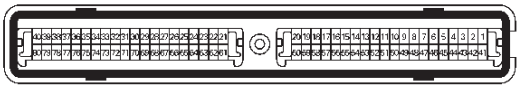 (RED)	H-53	(GREEN)
E-54 (J1)	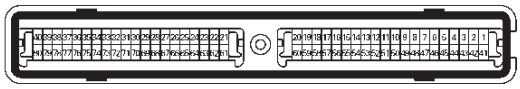 (BLUE)	H-54	
H-8	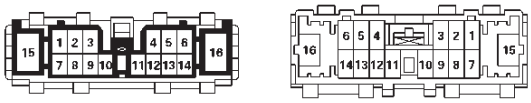	H-55	(BLUE)
H-10	(BLUE)	H-56	(GREEN)
H-11	(BLACK)	H-57	(BLACK)
H-24	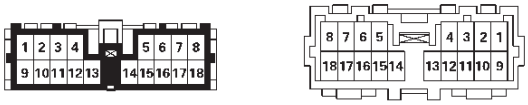 (YELLOW)	I-9	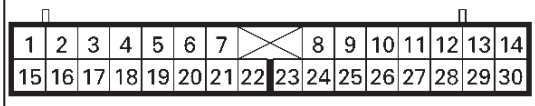
H-25	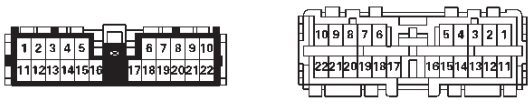 (BLUE)	M-6	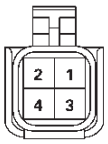
H-32	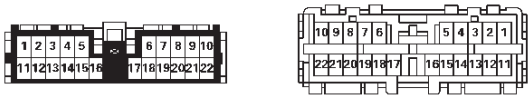	M-7	

Downloaded from www.Manualslib.com manuals search engine

No.	Connector face	No.	Connector face
M-15		M-25	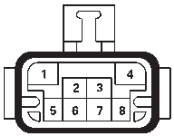

Downloaded from www.Manualslib.com manuals search engine

TROOPER

TRANSMISSION

MANUAL TRANSMISSION

CONTENTS

Service Precaution 7B–1
General Description 7B–2
Diagnosis 7B–3
Manual Transmission Assembly 7B–4
Removal 7B–4
Installation 7B–8
Disassembled View 7B–13
Disassembly 7B–16
Inspection 7B–34
Reassembly 7B–36
Main Data and Specifications 7B–62
Special Tools 7B–64

Service Precaution

WARNING: THIS VEHICLE HAS A SUPPLEMENTAL RESTRAINT SYSTEM (SRS). REFER TO THE SRS COMPONENT AND WIRING LOCATION VIEW IN ORDER TO DETERMINE WHETHER YOU ARE PERFORMING SERVICE ON OR NEAR THE SRS COMPONENTS OR THE SRS WIRING. WHEN YOU ARE PERFORMING SERVICE ON OR NEAR THE SRS COMPONENTS OR THE SRS WIRING, REFER TO THE SRS SERVICE INFORMATION. FAILURE TO FOLLOW WARNINGS COULD RESULT IN POSSIBLE AIR BAG DEPLOYMENT, PERSONAL INJURY, OR OTHERWISE UNNEEDED SRS SYSTEM REPAIRS.

CAUTION: Always use the correct fastener in the proper location. When you replace a fastener, use ONLY the exact part number for that application. ISUZU will call out those fasteners that require a replacement after removal. ISUZU will also call out the fasteners that require thread lockers or thread sealant. UNLESS OTHERWISE SPECIFIED, do not use supplemental coatings (Paints, greases, or other corrosion inhibitors) on threaded fasteners or fastener joint interfaces. Generally, such coatings adversely affect the fastener torque and the joint clamping force, and may damage the fastener. When you install fasteners, use the correct tightening sequence and specifications. Following these instructions can help you avoid damage to parts and systems.

Downloaded from www.Manualslib.com manuals search engine

General Description

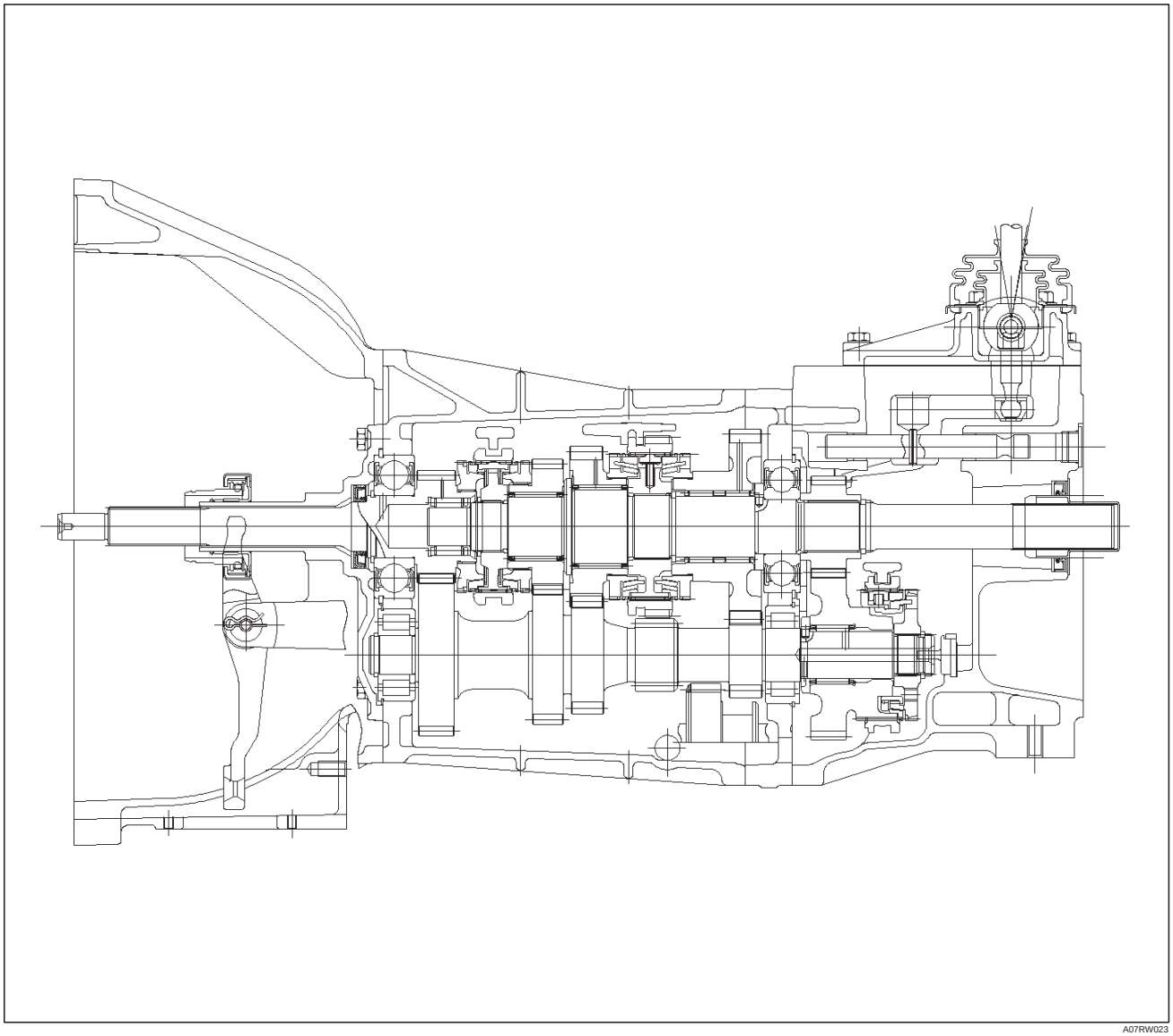

A07RW023

Downloaded from www.Manualslib.com manuals search engine

Diagnosis

Condition	Possible cause	Correction
Abnormal noise	Flywheel pilot bearing worn	Replace
	Bearings worn or broken (Mainshaft, counter shaft, and transfer shaft)	Replace
	Gear tooth contact surfaces worn or scuffed (Mainshaft, counter shaft, reverse idler gear and transfer gears)	Replace
	Splines worn (Mainshaft, synchronizer clutch hub)	Replace
	Gear or bearing thrust face seized	Replace
	Lack of backlash between meshing gears	Replace
Hard Shifting	Improper clutch pedal free play	Readjust
	Change lever sliding portions worn	Repair or replace Regrease
	Shift block, shift rod and/or control box sliding faces worn	Replace
	Shift arm and synchronizer sleeve groove worn	Replace worn parts
	Thrust washer, collar, and/or gear thrust faces worn (Mainshaft and counter shaft thrust play)	Replace worn parts
	Synchronizer parts worn	Replace
Walking or Jumping out of gear	Detent ball worn	Replace
	Detent spring weakened or broken	Replace
	Shift rod and/or control box sliding faces worn	Replace
	Shift arm and synchronizer sleeve groove worn	Replace worn parts
	Thrust washer, collar, and/or gear thrust faces worn (Mainshaft and counter shaft thrust play)	Replace worn parts
	Bearings worn or broken	Replace
	Splines worn (Mainshaft, synchronizer hub)	Replace
	Synchronizer spring weakened or broken	Replace
Oil leakage	Loose drain plug(s) and/or filler plug(s)	Tighten Replenish oil
	Defective or improperly installed gasket(s)	Replace
	Oil seal worn or scratched	Replace

Downloaded from www.Manualslib.com manuals search engine

Manual Transmission Assembly

Removal

NOTE: Before remove the transmission and transfer assembly from the vehicle, change the transfer mode to 2WD using push button on dash panel.

1. Remove engine hood.
2. Disconnect battery ground cable.
3. Remove the gear control lever knob.
4. Remove the front console assembly.
5. Remove the grommet assembly.
6. Remove the transmission control lever and transfer control lever.

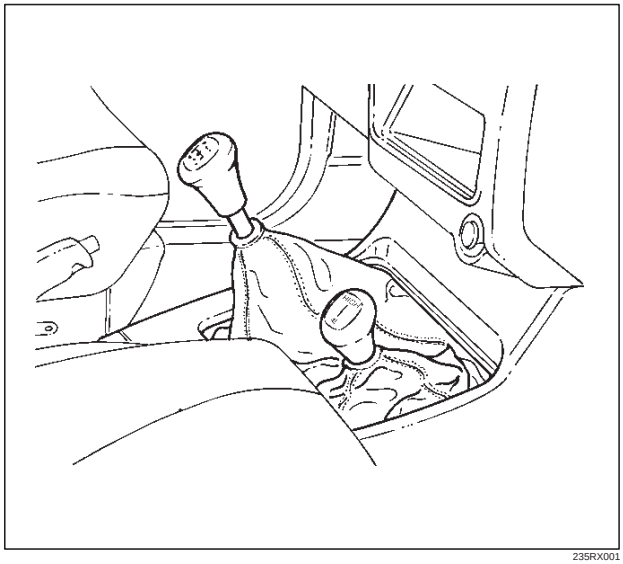

235RX001

7. Remove transfer protector.
8. Remove the rear propeller shaft.

NOTE: Apply alignment marks on the flange at the both front and rear side.

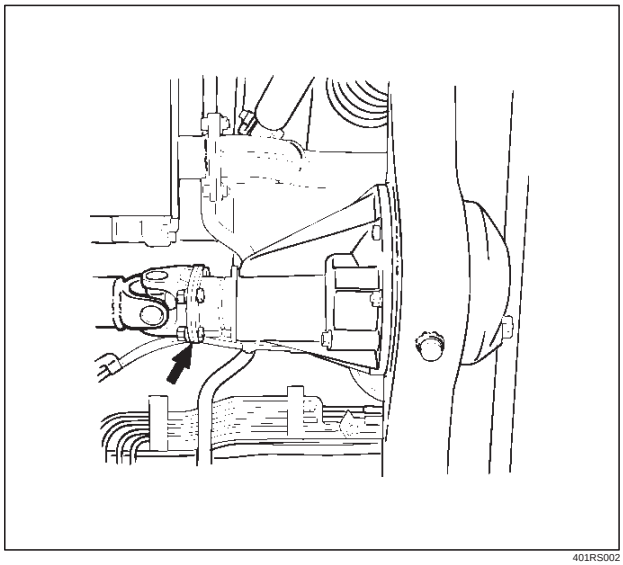

401RS002

9. Remove the front propeller shaft.

NOTE: Apply alignment marks on the flange at both the front and rear sides.

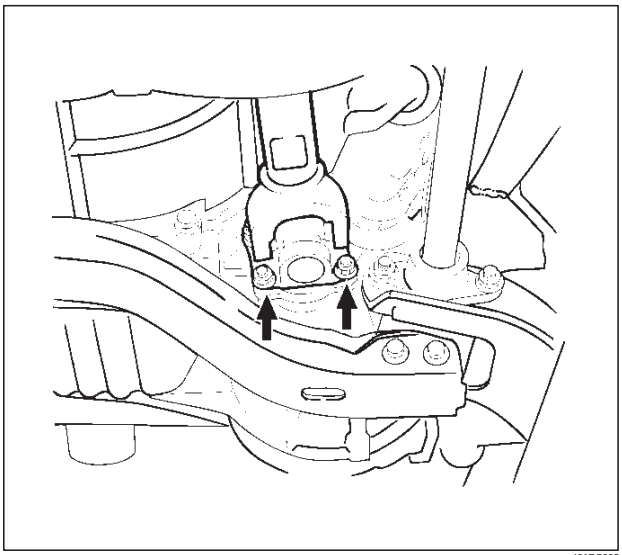

401RS003

10. Disconnect the reverse lamp switch, 4WD indicator switch, and 1-2 indicator switch harness connectors.

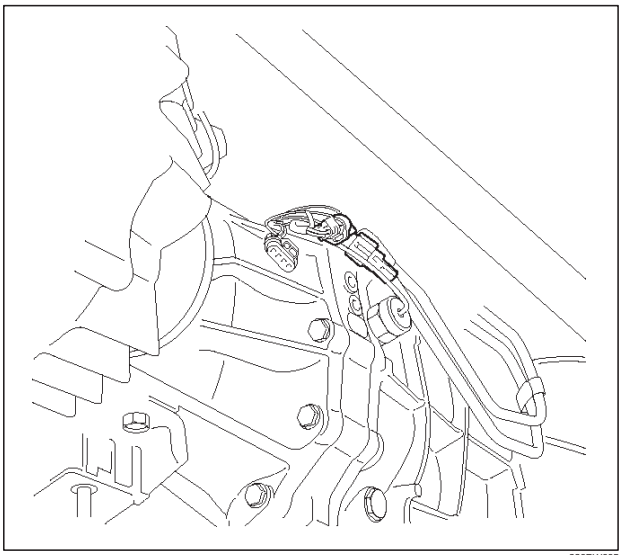

230RW005

Downloaded from www.Manualslib.com manuals search engine

11. Disconnect the speed sensor and 2WD-4WD actuator harness connectors.

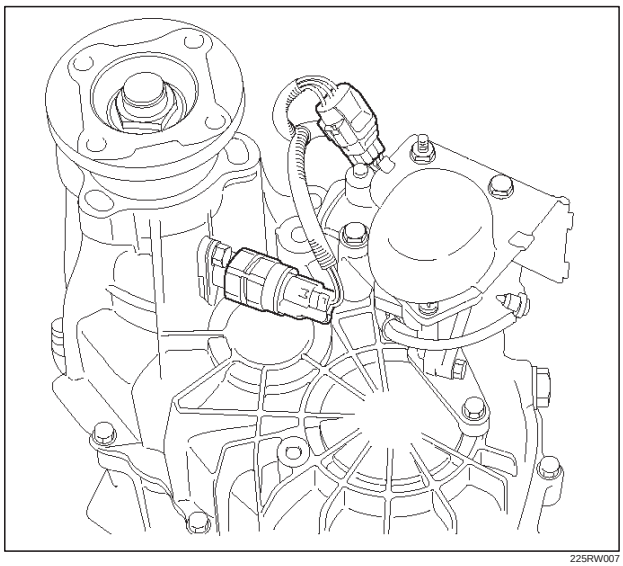

225RW007

12. Disconnect the 4WD indicator harness connector.

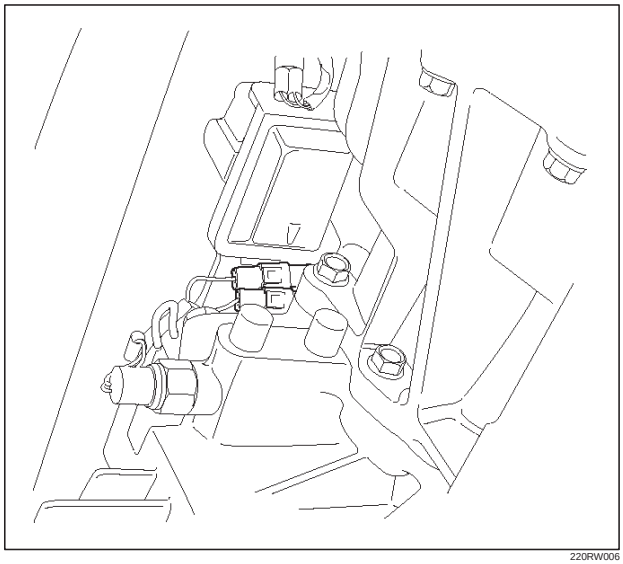

220RW006

13. Remove two transmission harness clamps from the transmission case and bracket .

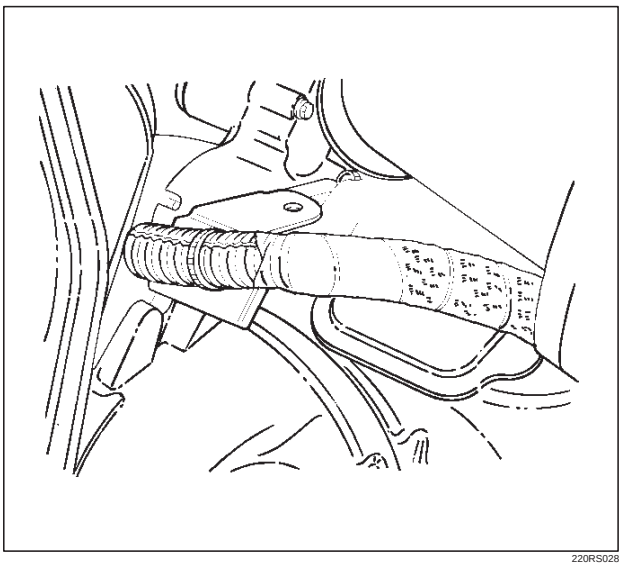

220RS028

14. Remove four fuel pipe bracket.

Downloaded from www.Manualslib.com manuals search engine

141RW024

15. Remove the heat protector.

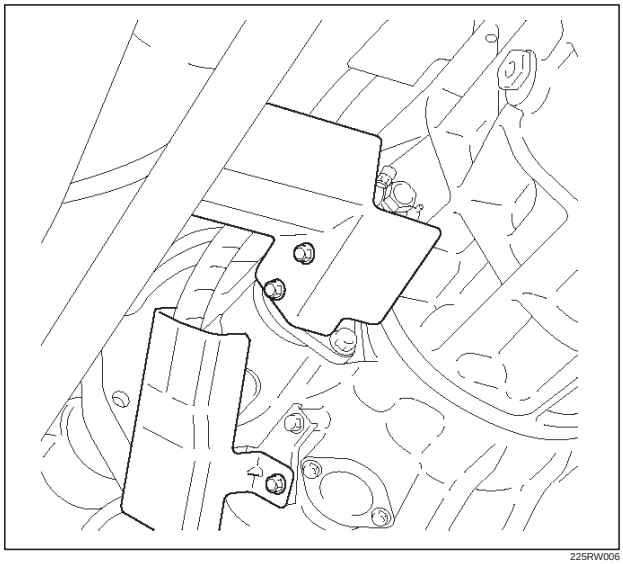

225RW006

16. Remove the slave cylinder.

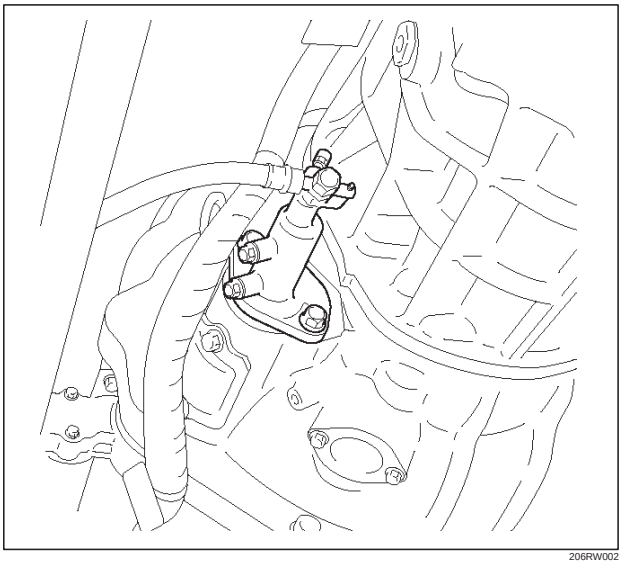

206RW002

Downloaded from www.Manualslib.com manuals search engine

- Remove the dust cover from the clutch housing.

17. Support the transfer case with a jack.
18. Remove two engine rear mount nuts.

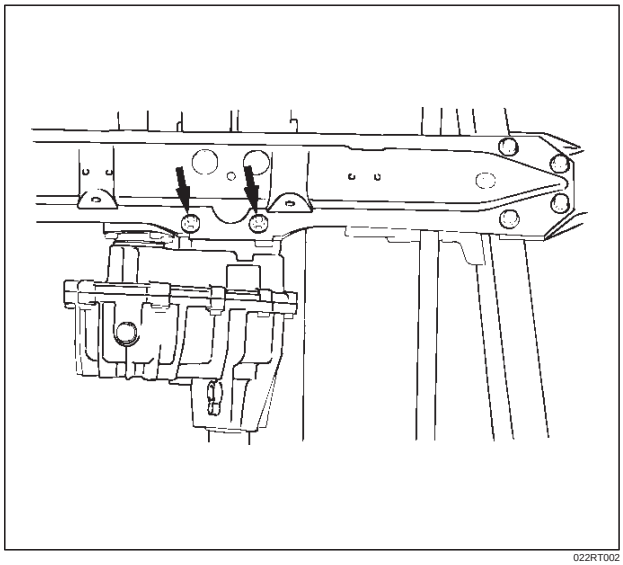

022RT002

19. Remove third crossmember.
20. Disconnect four oxygen sensor connectors from the transmission harness.
21. Remove the right front exhaust pipe and catalytic converter assembly.
22. Remove the harness heat protector.
23. Remove two engine rear mount bolts.
24. Remove the rear mount from the transmission.
25. Remove three flywheel under cover.
26. Support the transmission with a transmission jack and then remove jack from the transfer case side.

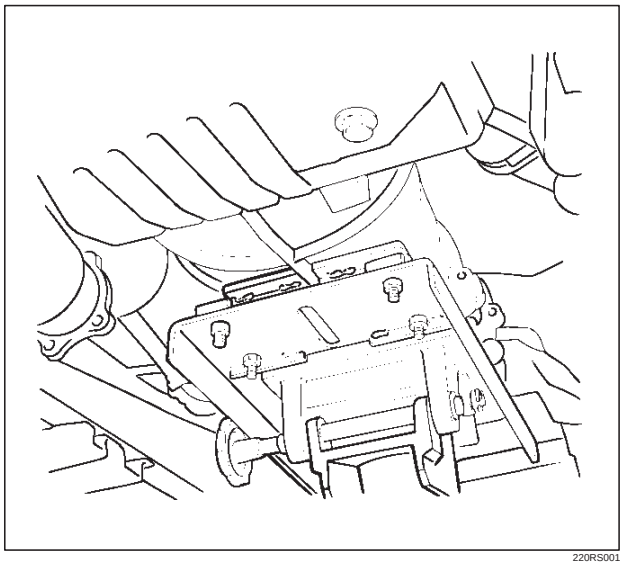

220RS001

27. Use the clutch release bearing remover J–39207 to disconnect the clutch release bearing from the clutch pressure plate.

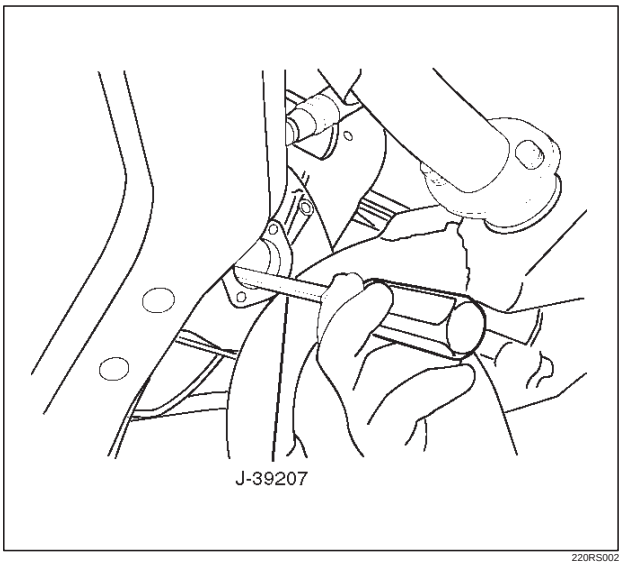

220RS002

Release bearing disconnection

1. Pull the shift fork toward the transmission to press the clutch release bearing against the clutch.
2. Insert the clutch release bearing remover between the wedge collar and the release bearing.
3. Turn the remover to separate the release bearing.

Downloaded from www.Manualslib.com manuals search engine

NOTE: Be sure not to insert the remover between the wedge collar and the clutch.

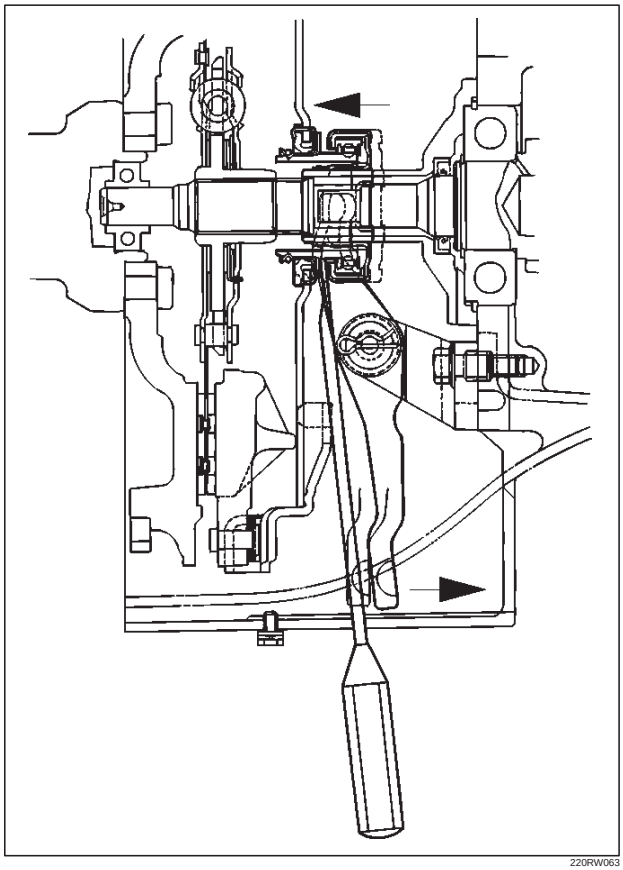

220RW063

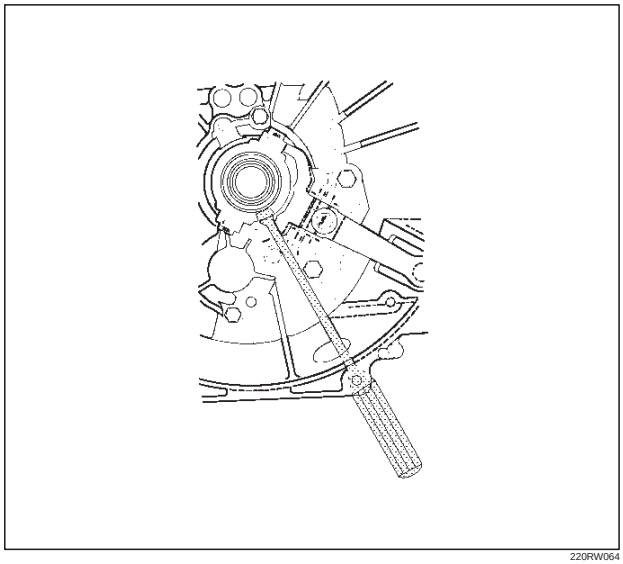

220RW064

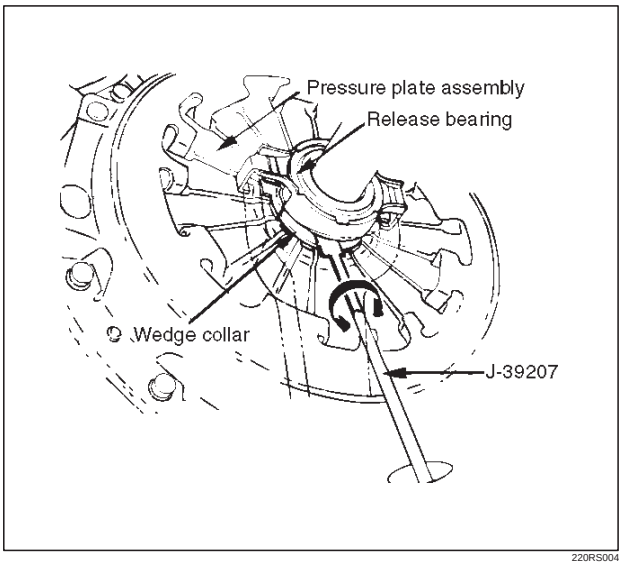

220RS004

28. Remove the transmission retaining nuts and bolts.
29. Remove the transmission assembly with transfer case from the vehicle.

NOTE: Remove the transfer case from the transmission assembly if the transmission disassembly required.

Refer to Transfer Case in Drive Line/Axle section.

Installation

1. Apply a thin coat of molybdenum disulfide grease to the top gear shaft spline.
2. Slowly operate the transmission jack until the front of transmission is aligned with the rear of the engine.
   The slope of the engine and the transmission must be the same.
3. Align the top gear shaft spline with the clutch driven plate spline.

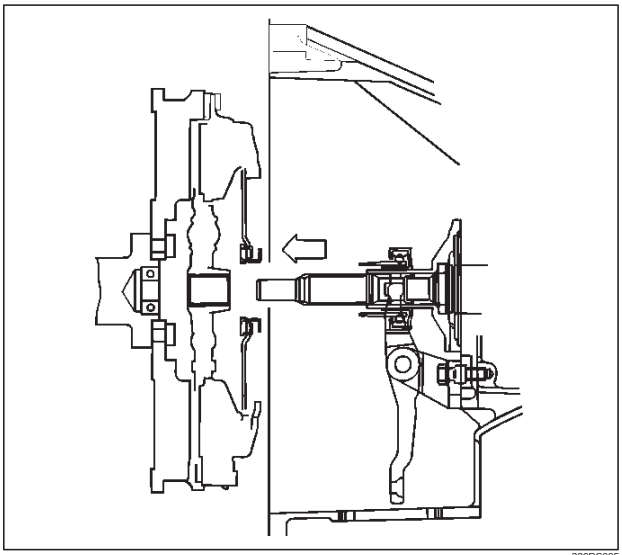

220RS005

4. Install the transmission to the engine.
   Tighten the transmission retaining nuts and bolts.

Downloaded from www.Manualslib.com manuals search engine

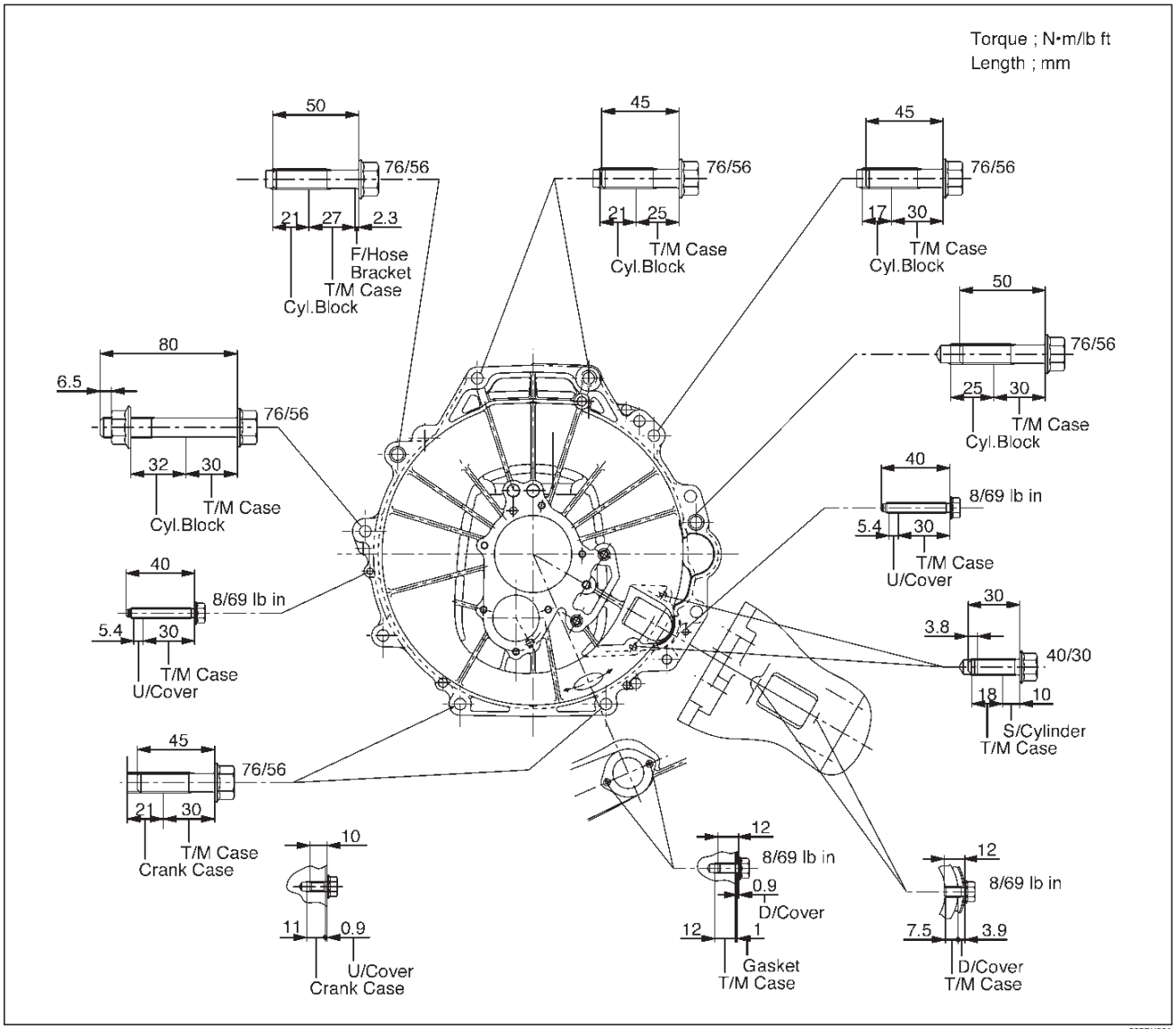

225RX001

5. Apply a force of about 113 N (26 lb) to the tip of the shift fork in the direction of the transmission to engage the clutch pressure plate and release bearing.

NOTE: A clicking sound is heard when the release bearing and the tip of the diaphragm spring engage each other.

Check to see if they are securely engaged by pushing the tip of the shift fork toward the engine while applying a force of about 25 N (5.5 lb). If the shift fork will not move, then they are securely engaged.

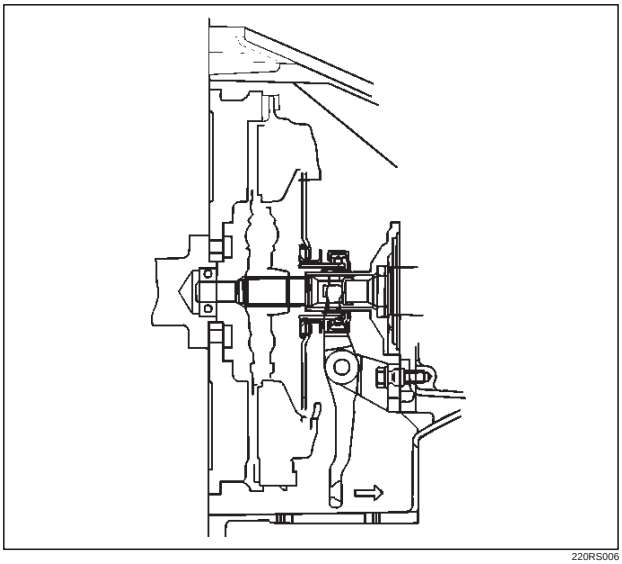

220RS006

6. Install three flywheel under cover.

Downloaded from www.Manualslib.com manuals search engine

7. Install the engine rear mount to the transmission case and tighten the fixing bolts specified torque.

   Torque: 41 N·m (30 lb ft)

8. Install the harness heat protector.
9. Install the right front exhaust pipes and catalytic converter assembly.

   Torque

   Exh. pipe to exh. manifold: 67 N·m (49 lb ft)

   Exh. pipe flange bolt: 43 N·m (32 lb ft)

10. Connect four oxygen sensor connectors to the transmission harness.
11. Install the third crossmember to the frame and tighten the fixing bolts specified torque.

    Torque: 50 N·m (37 lb ft)

12. Tighten the engine rear mount nuts specified torque.

    Torque: 50 N·m (37 lb ft)

13. Remove the transmission jack.
14. Apply the grease to top hole portion of the shift fork.
15. Install the slave cylinder and tighten the fixing bolts specified torque.

    Torque: 43 N·m (32 lb ft)

    Install the clutch dust cover to the clutch housing and tighten the fixing bolts specified torque.

    Torque: 8 N·m (69 lb in)

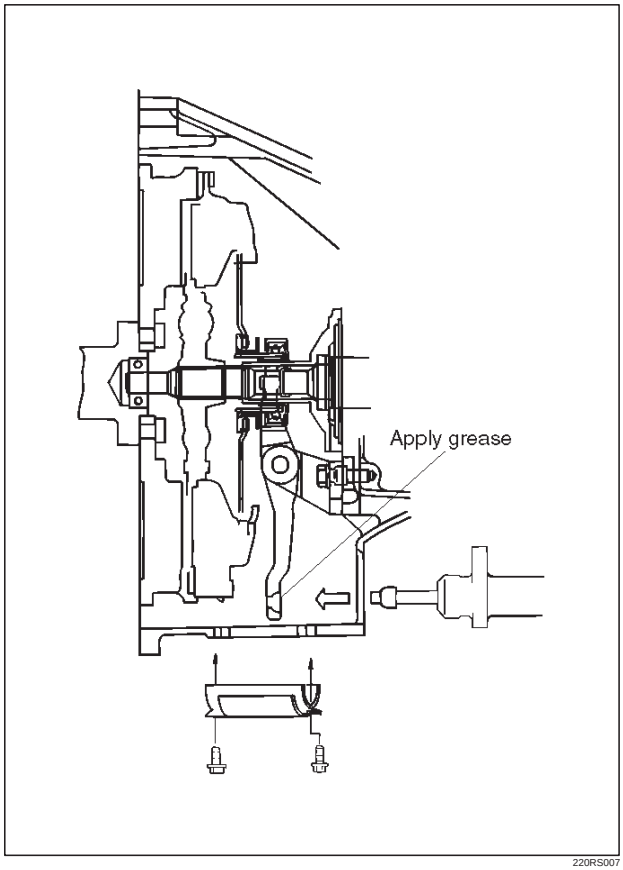

220RS007

16. Install the slave cylinder heat protector to the slave cylinder.
17. Install harness heat protector.

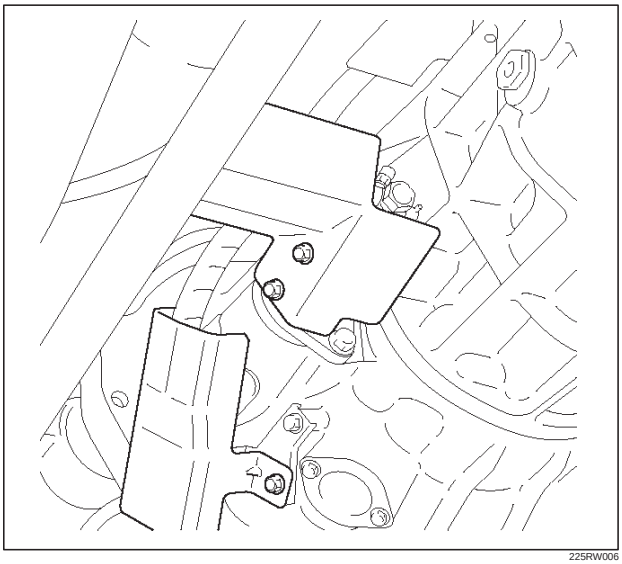

225RW006

18. Install four fuel pipe bracket.

Downloaded from www.Manualslib.com manuals search engine

141RW024

19. Install bracket and two transmission harness clamps to the transmission case.

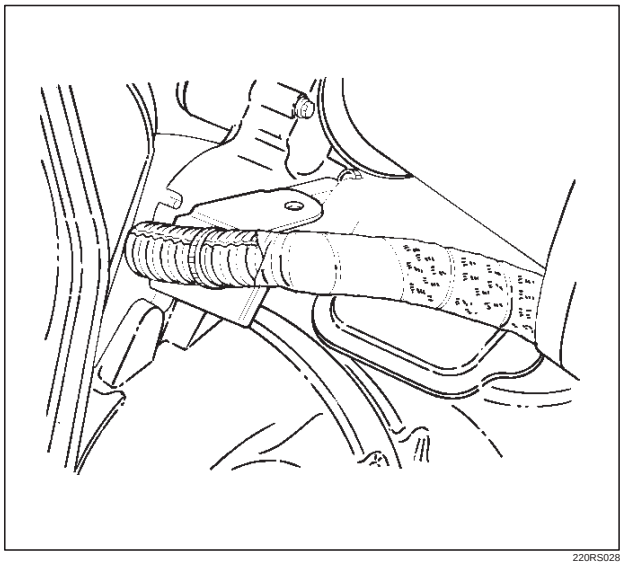

220RS028

20. Connect the speedometer sensor and 2WD–4WD actuator harness connector.

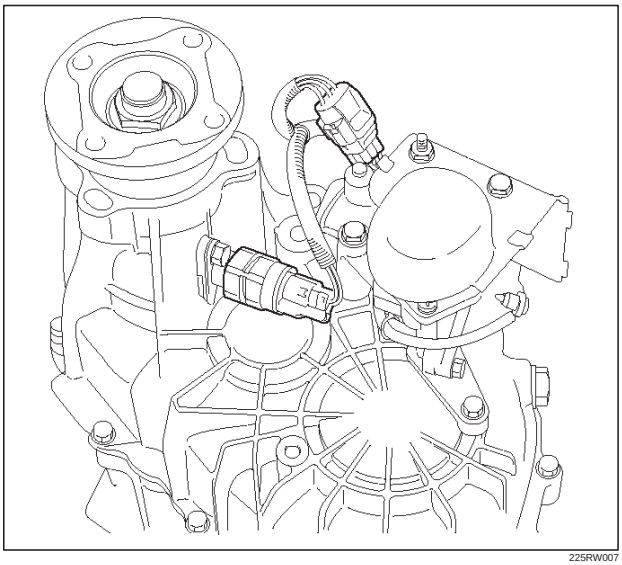

225RW007

Downloaded from www.Manualslib.com manuals search engine

21. Connect the backup lamp switch, 4WD indicator switch, and 1-2 indicator switch harness connectors.

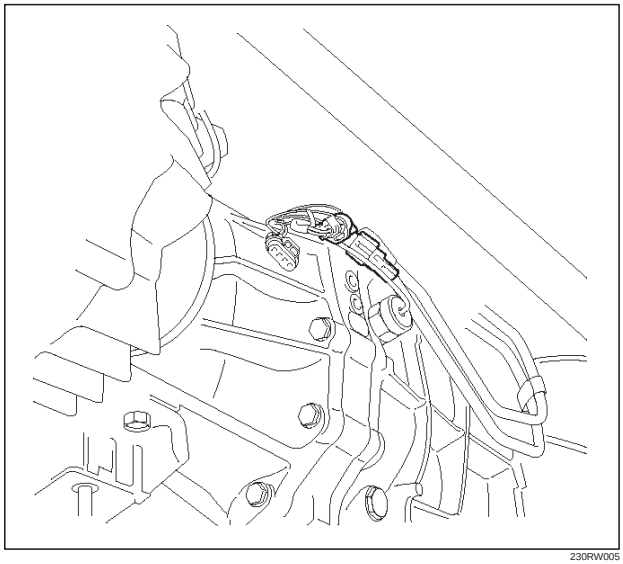

230RW005

22. Install the front propeller shaft and tighten the fixing bolts and nuts specified torque.

    Torque: 63 N·m (46 lb ft)

23. Install the rear propeller shaft and tighten the fixing bolts and nuts specified torque.

    Torque: 63 N·m (46 lb ft)

24. Install transfer protector and tighten the fixing bolts specified torque.

    Torque: 37 N·m (27 lb ft)

25. Install the transmission control lever and transfer control lever.
26. Install the grommet assembly.
27. Install the front console assembly.
28. Install the gear control lever knob.

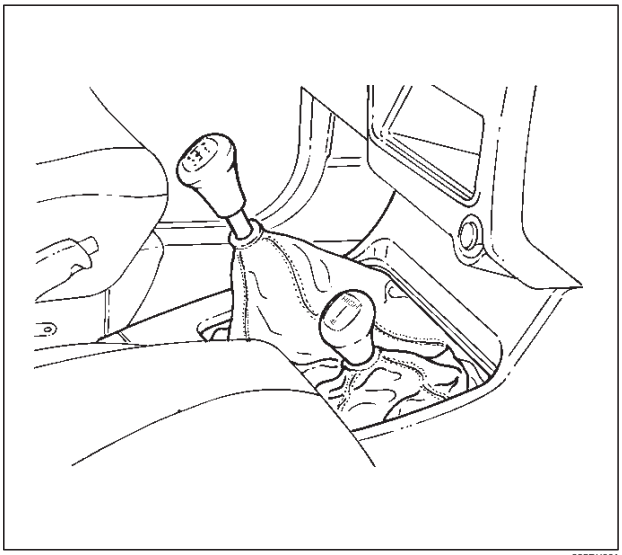

235RX001

29. Connect battery ground cable.
30. Install engine hood.

Downloaded from www.Manualslib.com manuals search engine

Disassembled View

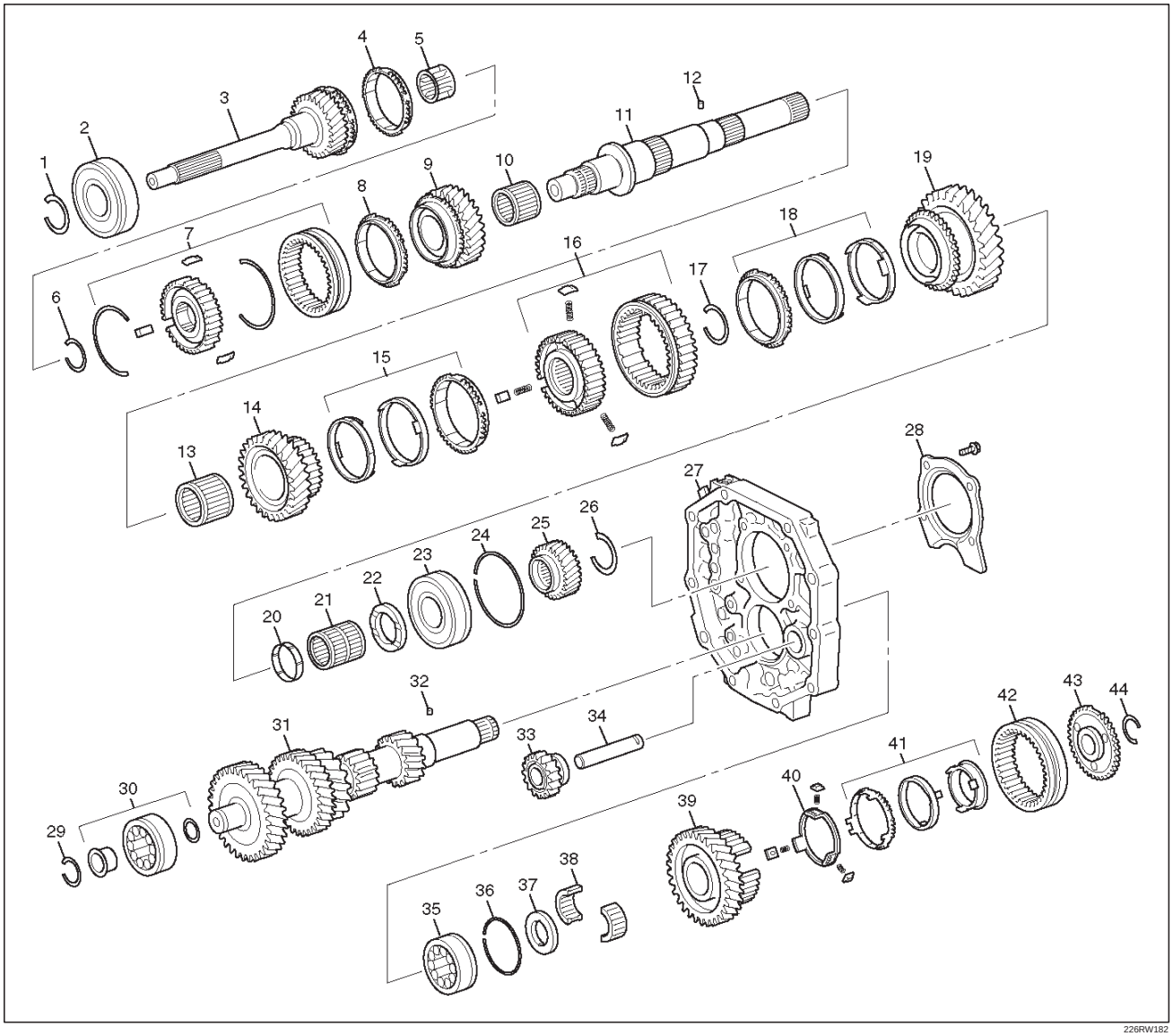

226RW182

Legend

(1) Snap Ring
(2) Bearing
(3) Top Gear Shaft
(4) Block Ring
(5) Roller Bearing
(6) Snap Ring
(7) Clutch Hub No.2 Assembly
(8) 3rd Block Ring
(9) 3rd Gear
(10) 3rd Gear Needle Roller Bearing
(11) Mainshaft
(12) Thrust Washer Pin
(13) 2nd Gear Needle Roller Bearing
(14) 2nd Gear
(15) Synchronizer Assembly
(16) Clutch Hub No.1 Assembly
(17) Snap Ring
(18) Synchronizer Assembly
(19) 1st Gear
(20) 1st Gear Bearing Spacer
(21) 1st Gear Needle Roller Bearing
(22) 1st Gear Thrust Washer
(23) Mainshaft Bearing
(24) Snap Ring
(25) 5th Gear
(26) Snap Ring
(27) Intermediate Plate
(28) Bearing Retainer
(29) Snap Ring
(30) Front Bearing Assembly
(31) Counter Gear Shaft
(32) Thrust Washer Pin
(33) Reverse Idle Gear
(34) Reverse Idle Gear Shaft
(35) Counter Gear Shaft Center Bearing
(36) Snap Ring
(37) Thrust Washer

Downloaded from www.Manualslib.com manuals search engine

(38) Roller Bearing
(39) Counter 5th Gear
(40) Reverse Block Ring
(41) Synchronizer Assembly
(42) Hub Sleeve No.3
(43) 5th Gear Spline Piece
(44) Snap Ring

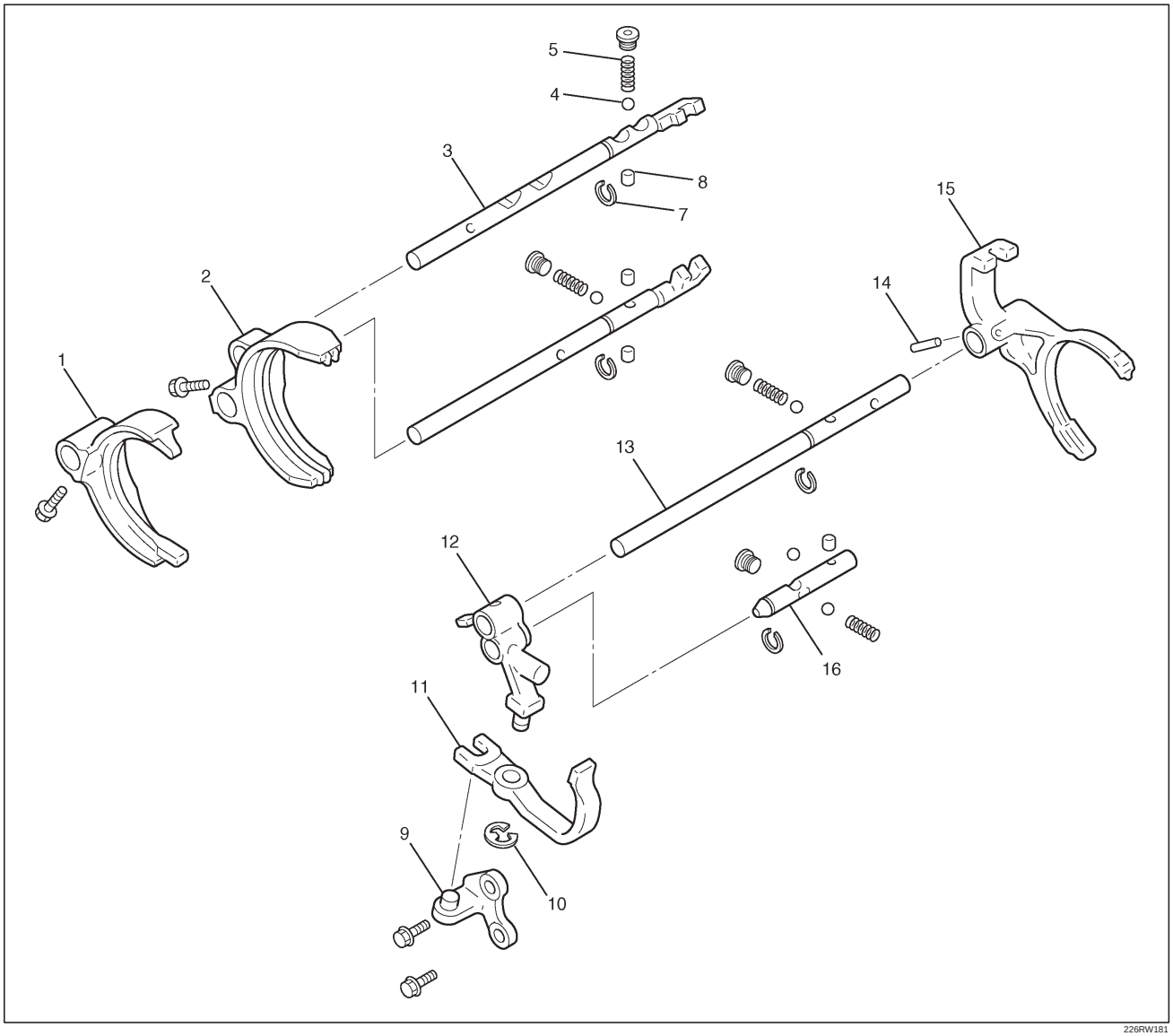

226RW181

Legend

(1) 3rd-4th Shift Arm
(2) 1st-2nd Shift Arm
(3) 3rd-4th Shift Rod
(4) Ball
(5) Spring
(6) 1st-2nd Shift Rod
(7) Snap Ring
(8) Interlock Pin
(9) Reverse Shift Arm Bracket
(10) E–Ring
(11) Reverse Shift Arm No.2
(12) Reverse Shift Arm No.1
(13) 5th Reverse Shift Rod
(14) Spring Pin
(15) 5th Shift Arm
(16) Reverse Shift Rod

Downloaded from www.Manualslib.com manuals search engine

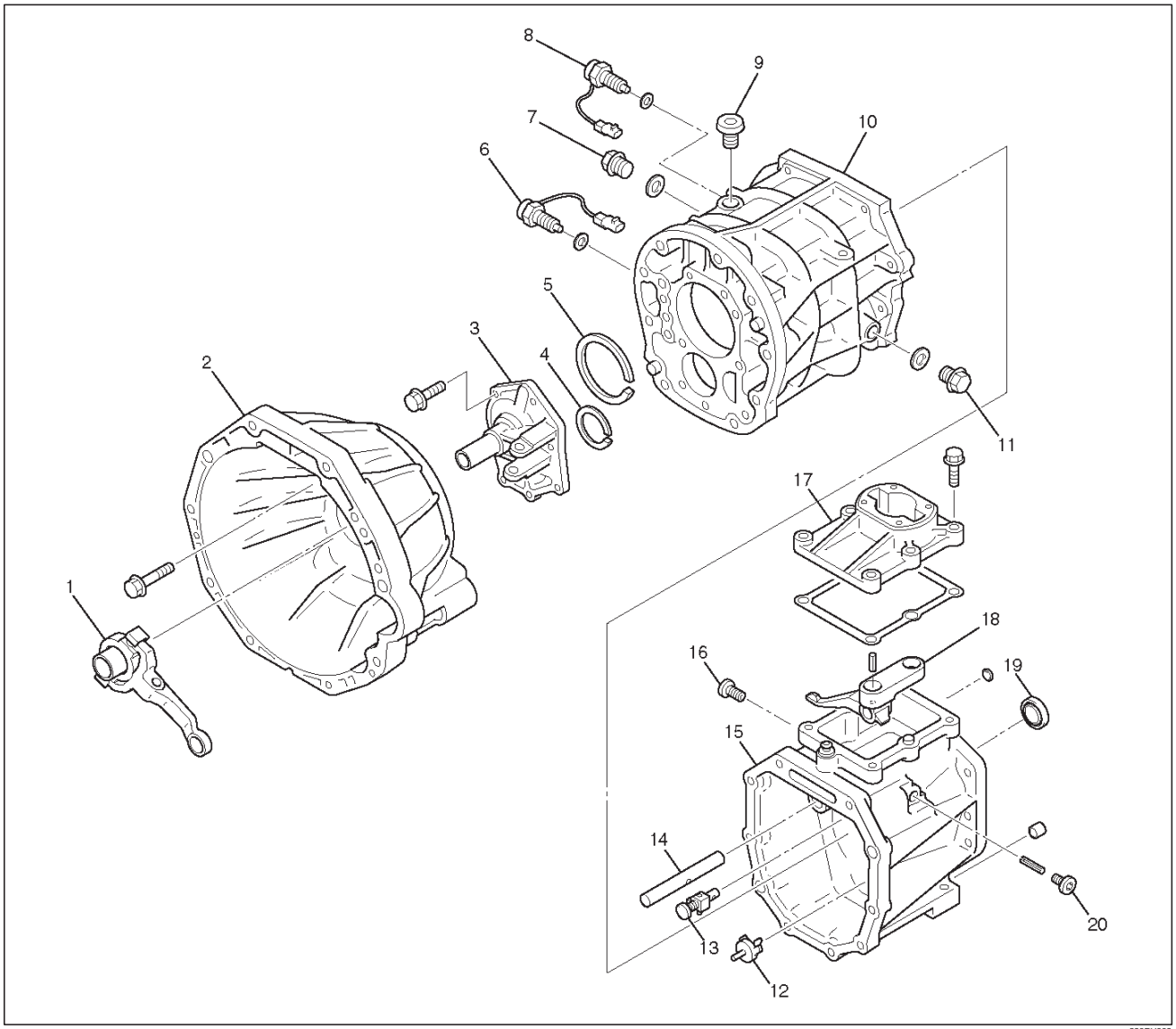

220RY002

Legend

(1) Release Bearing and Shift Fork
(2) Clutch Housing
(3) Front Cover
(4) Snap Ring
(5) Snap Ring
(6) 1st and 2nd Switch
(7) Drain Plug
(8) Backup Light Switch
(9) Plug
(10) Transmission Case
(11) Filler Plug
(12) Oil Receiver Pipe
(13) Reverse Restrict Pin
(14) Gear Control Rod
(15) Transfer Adapter
(16) Plug
(17) Gear Control Box
(18) Shift Lever Housing
(19) Oil Seal
(20) Plug

Downloaded from www.Manualslib.com manuals search engine

Disassembly

1. Remove the drain plag and filler plug.
   1. Remove the drain plug (1) and gasket.
   2. Remove the filler plug (2) and gasket.

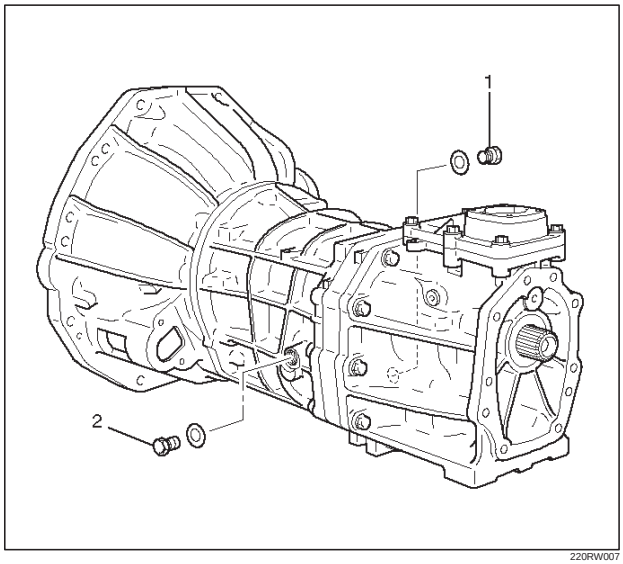

220RW007

2. Remove the clutch release bearing and shift fork.
   1. Remove the clutch release bearing (3) from the front cover.
   2. Remove the split pin (4). Remove the shaft from the under. Remove the shift fork (5).

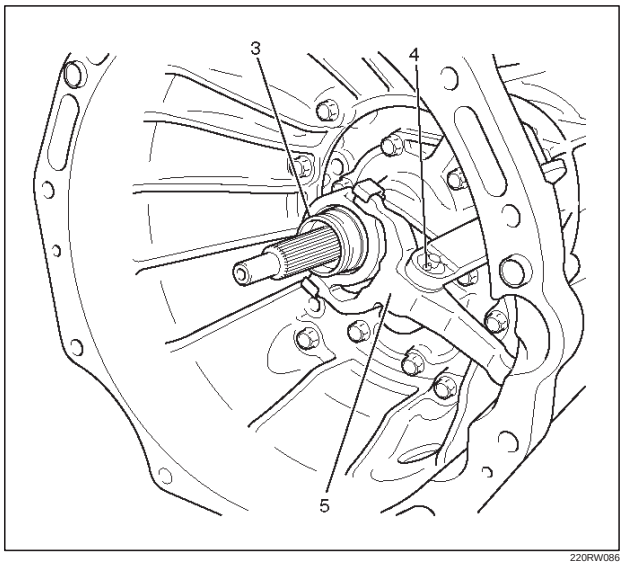

220RW086

3. Remove the switch.
   1. Remove backup light switch (6) and gasket.
   2. Remove 1st and 2nd switch (8) and gasket.

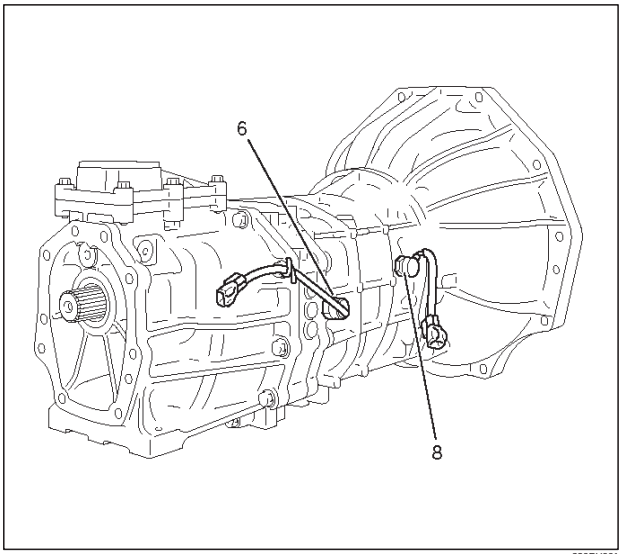

220RY001

4. Remove the clutch housing.
   1. Remove the 9 bolts.

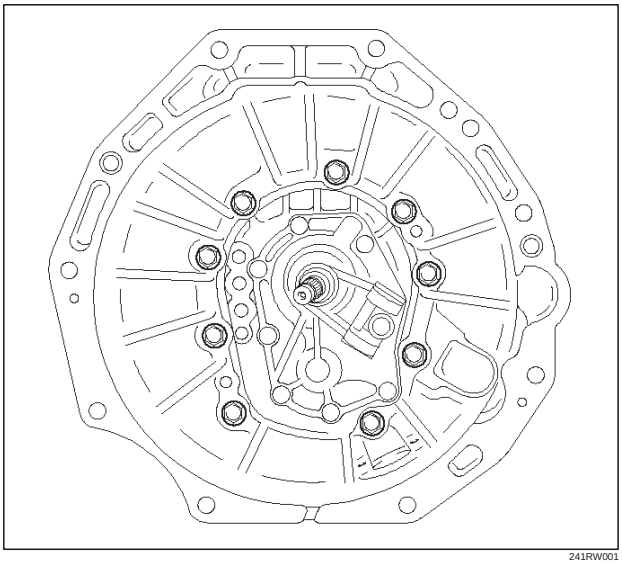

241RW001

Downloaded from www.Manualslib.com manuals search engine

2. Using a plastic hammer, carefully tap the clutch housing.

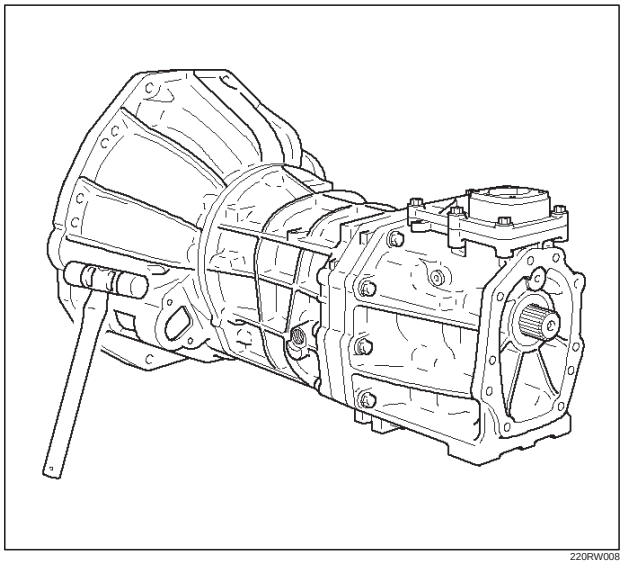

220RW008

5. Remove gear control box and gasket.
   1. Remove the 6 bolts, gear control box and gasket.

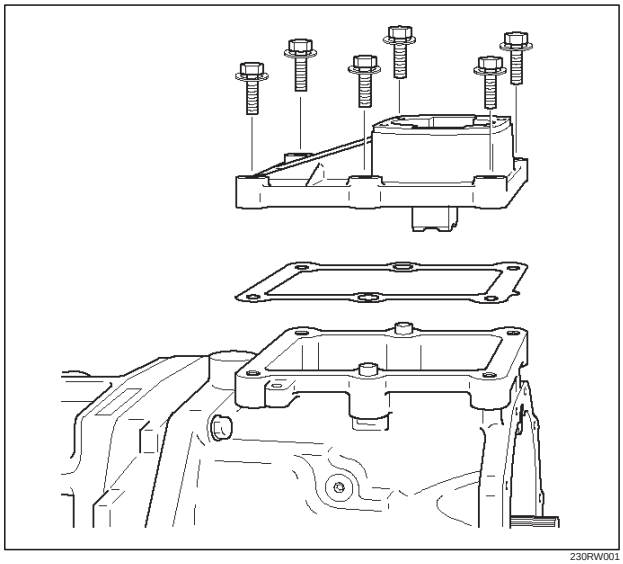

230RW001

6. Remove transfer adapter.
   1. Using a hexagon wrench, remove the plug (1).

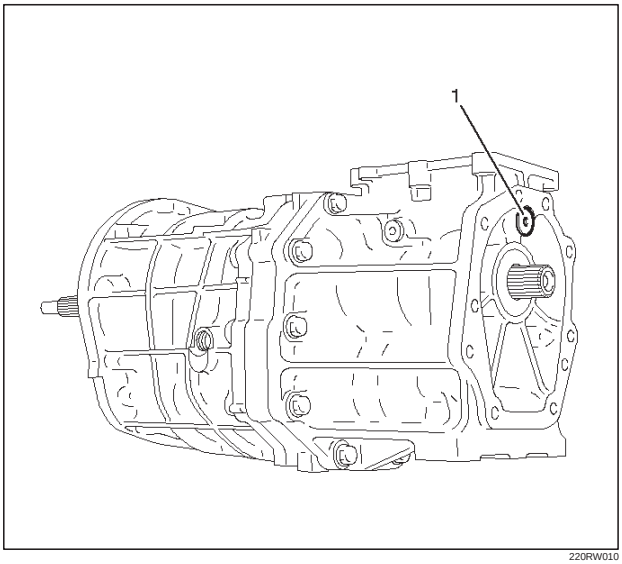

220RW010

   2. Using a pin punch and hammer, drive out the slotted spring pin (2).

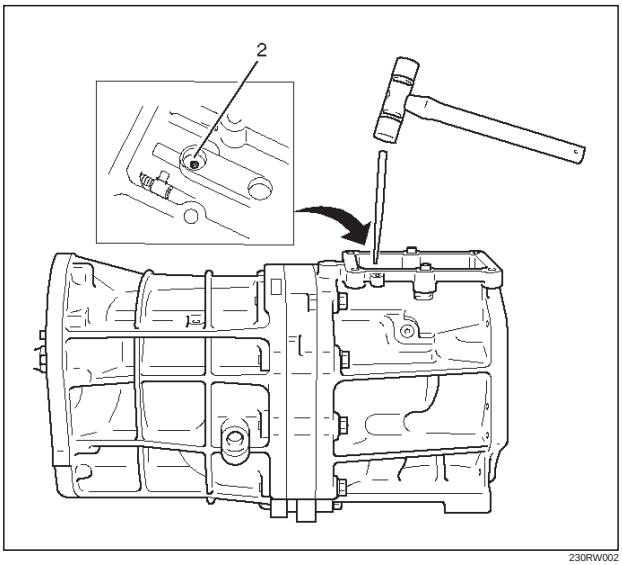

230RW002

Downloaded from www.Manualslib.com manuals search engine

3. Using the M8 × 1.25 bolt, remove the gear control rod and the shift lever housing.

NOTE: Turn the M8 bolt a few times, before remove the gear control rod.

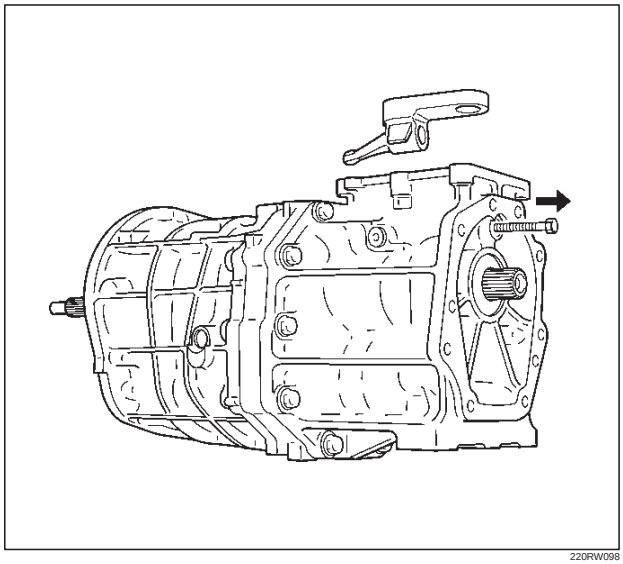

220RW098

4. Remove the 10 bolts and clamp.

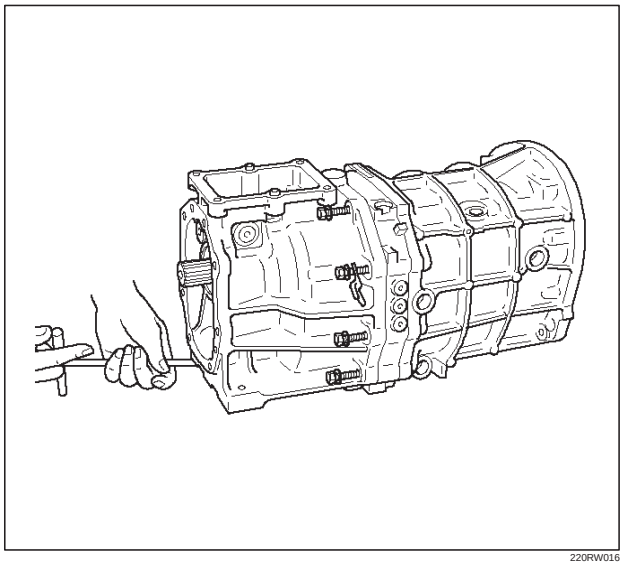

220RW016

5. Using a plastic hammer, tap the transfer adapter.

NOTE:

- Be careful not to lose the pin.
- Cover the mainshaft splines with adhesive tape. This will prevent damage to the oil seal lip.

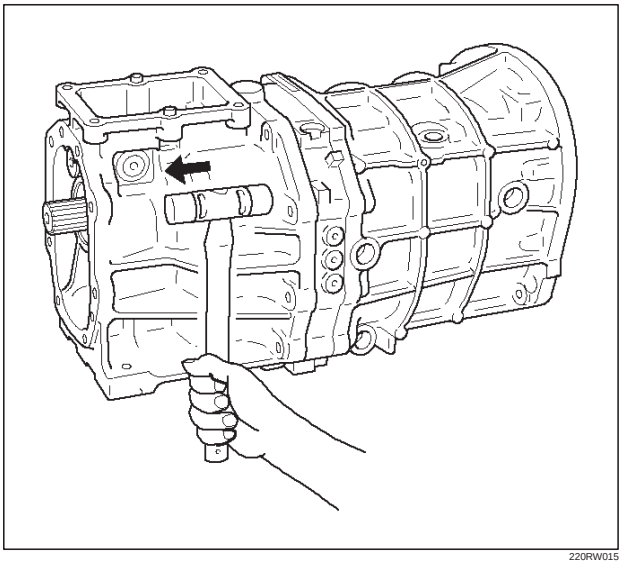

220RW015

7. Disassemble the transfer adapter assembly.
   1. Using a torx socket wrench(T40), remove the plug.

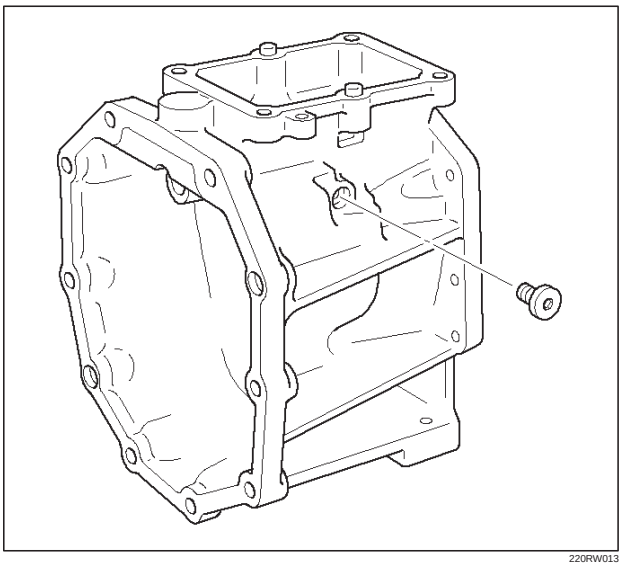

220RW013

Downloaded from www.Manualslib.com manuals search engine

2. Using a pin punch and hammer, drive out the slotted spring pin. Remove the reverse restrict pin.

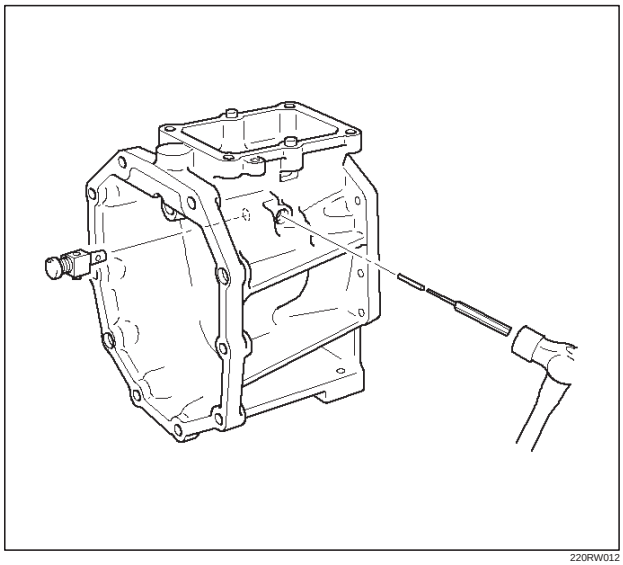

220RW012

3. Remove the oil receiver pipe.

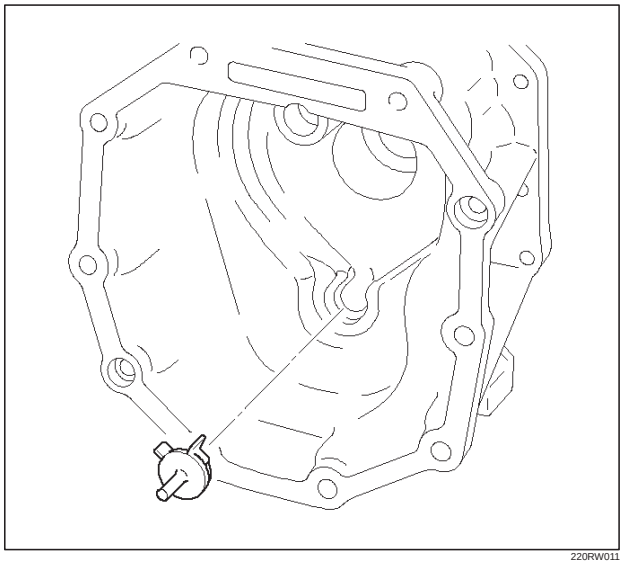

220RW011

4. Remove the oil seal.
5. Using socket hexagon wrench, remove the plug.

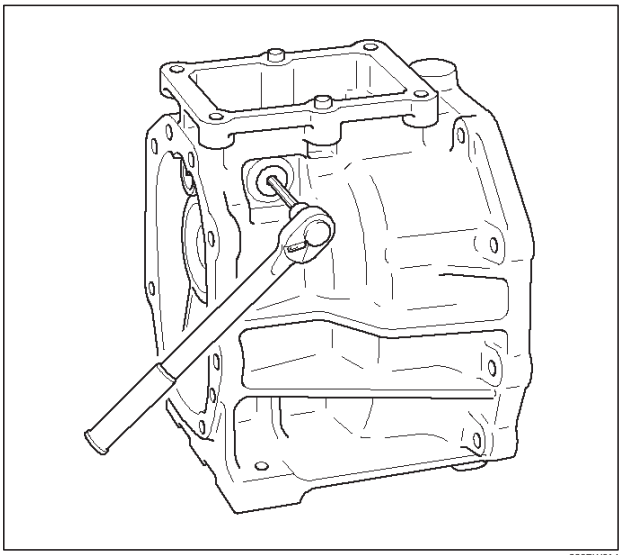

220RW014

8. Remove the front cover.
   1. Remove the 8 bolts.

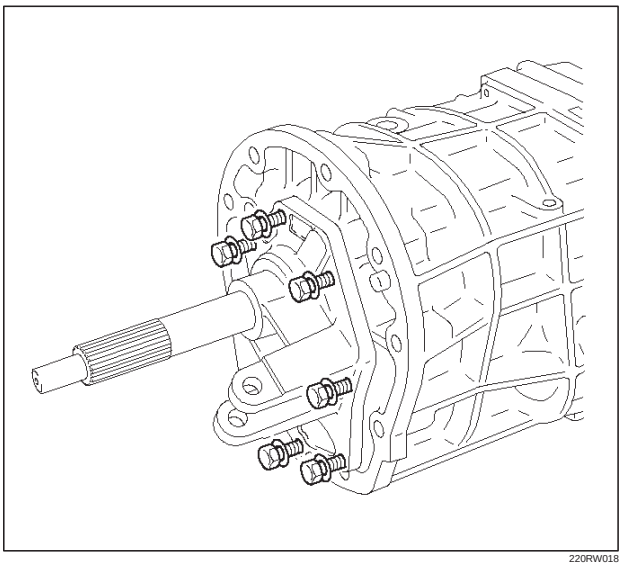

220RW018

Downloaded from www.Manualslib.com manuals search engine

2. Using a plastic hammer, carefully tap the front cover.

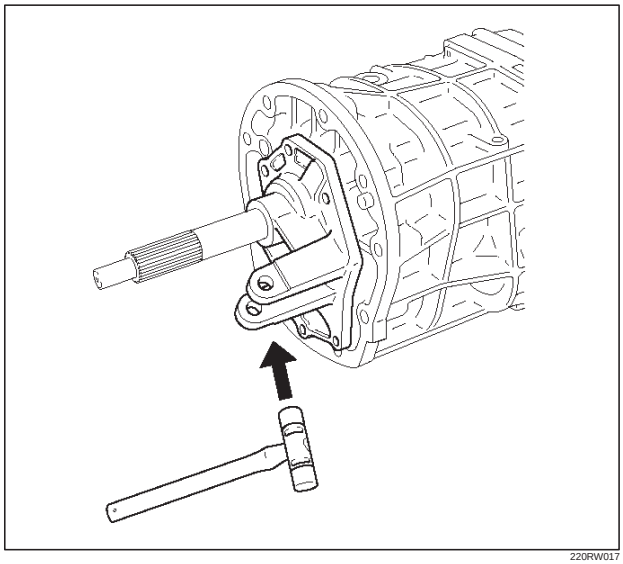

220RW017

9. Remove the front cover oil seal.
   1. Mount the front cover through the aluminum plate in a vise.
   2. Using screwdriver, remove oil seal (1).

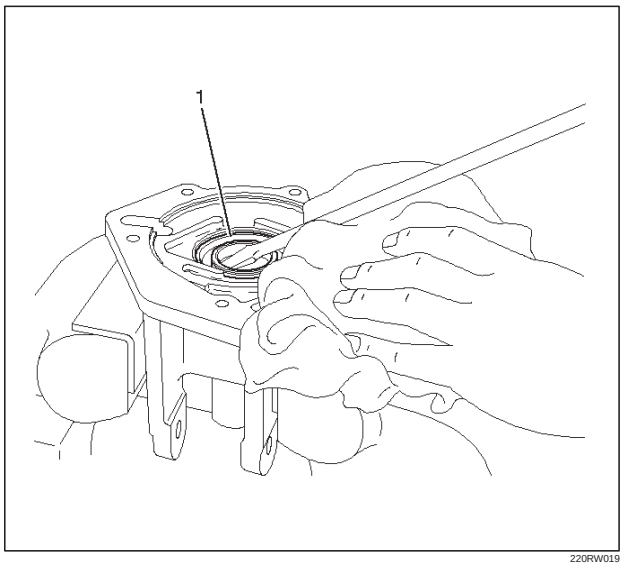

220RW019

10. Remove the transmission case.
   1. Using a snap ring expander, remove the 2 snap rings (1)(2).

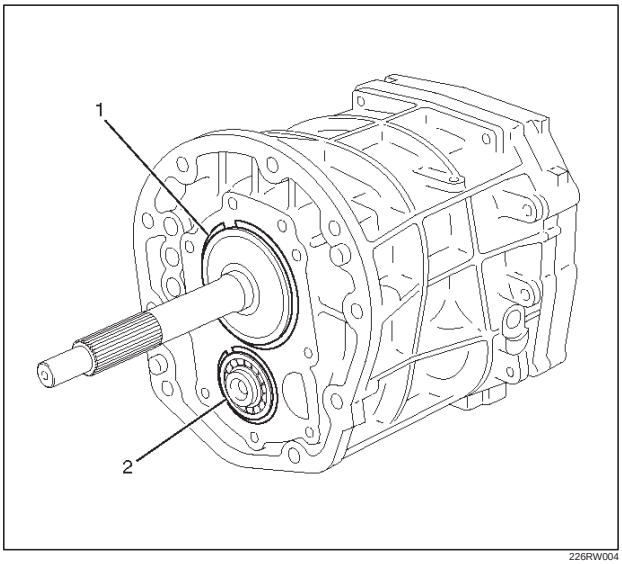

226RW004

   2. Using a plastic hammer, carefully tap the transmission case.

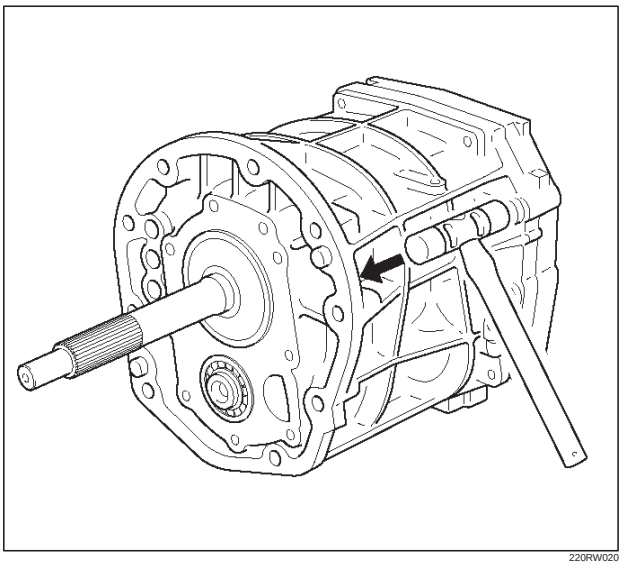

220RW020

Downloaded from www.Manualslib.com manuals search engine

11. Mount the intermediate plate.
    1. Mount the intermediate plate through the aluminum plate in a vise.

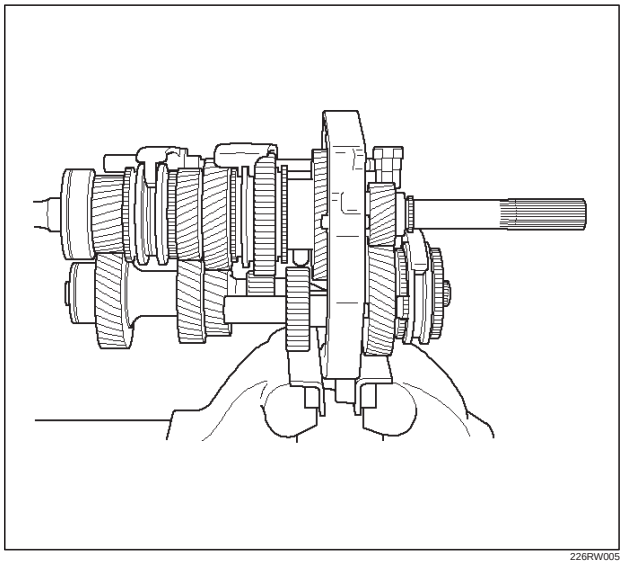

226RW005

12. Remove the slotted spring pin.
    1. Using a pin punch and hammer, drive out the pin from the arm.

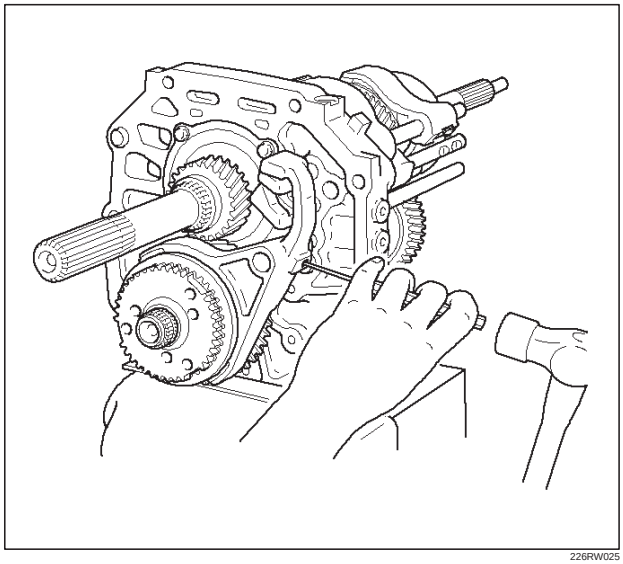

226RW025

13. Remove the shift arm set bolt.
    1. Remove the 2 bolts from the shift arm.

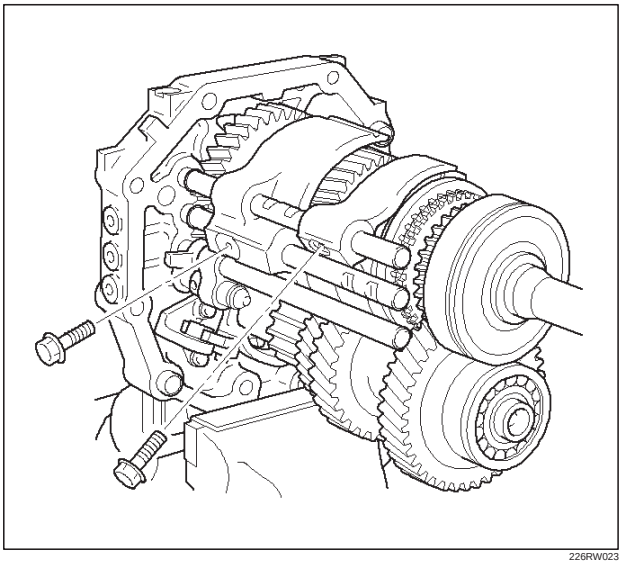

226RW023

14. Remove the counter 5th gear.
    1. Using 2 screwdrivers and hammer, tap out the snap ring.

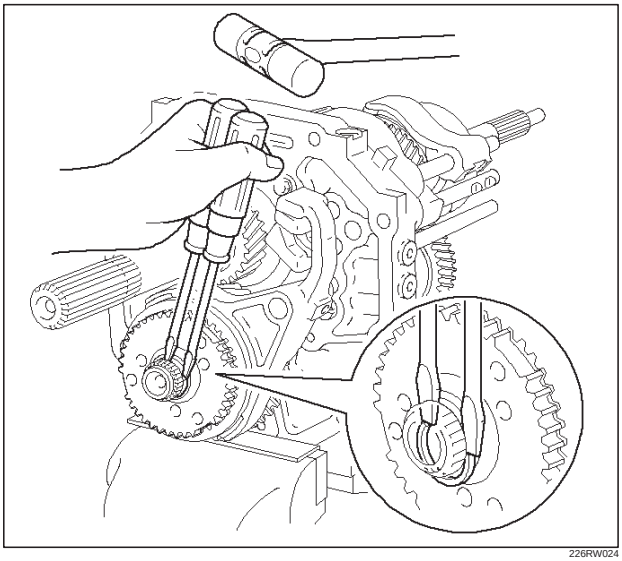

226RW024

Downloaded from www.Manualslib.com manuals search engine

2. Using remover J–42794 and attachment J–42988, remove the 5th gear spline piece.

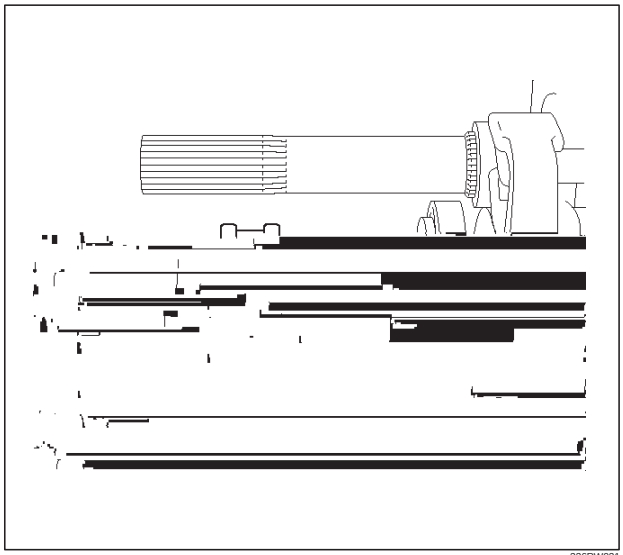

226RW021

3. Remove the hub sleeve No.3, block ring set, counter 5th gear, bearing and 5th shift arm.

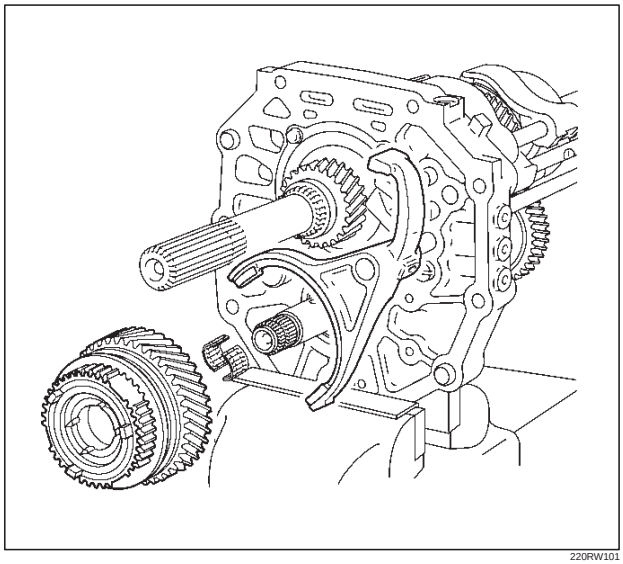

220RW101

4. Remove the synchronizer pull ring, synchronizer cone ring, and synchronizer outer ring from hub sleeve No.3.

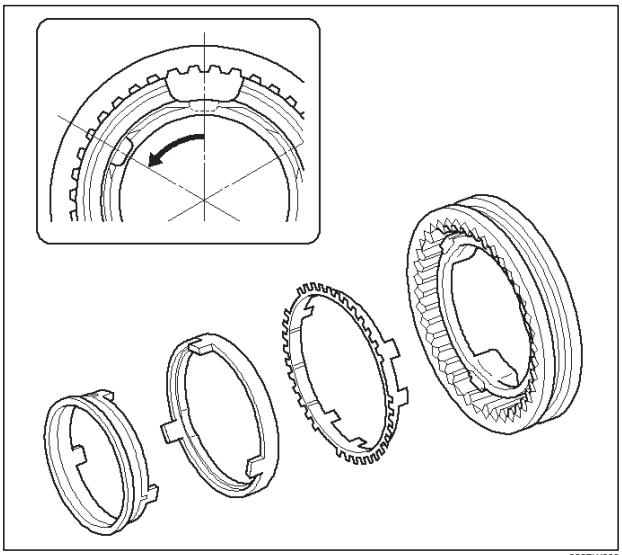

226RW066

5. Remove the reverse block ring from the hub sleeve No.3. Remove the 3 inserts and 3 compression springs.

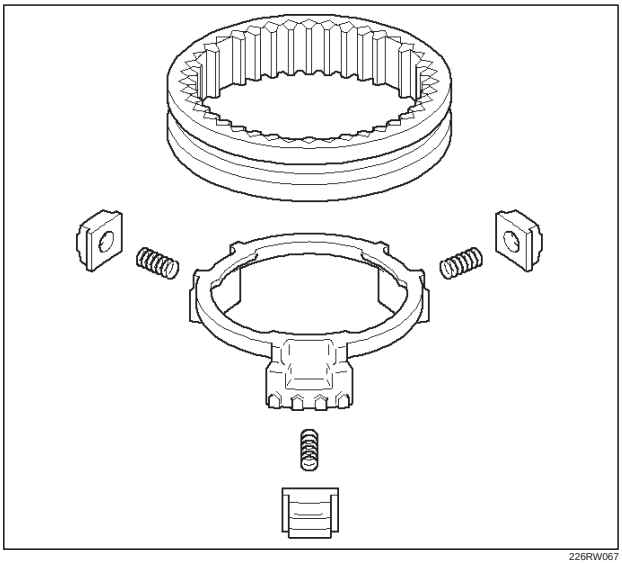

226RW067

Downloaded from www.Manualslib.com manuals search engine

15. Remove the thrust washer.
    1. Remove the thrust washer from counter gear shaft.
    2. Remove the thrust washer pin from counter gear shaft.

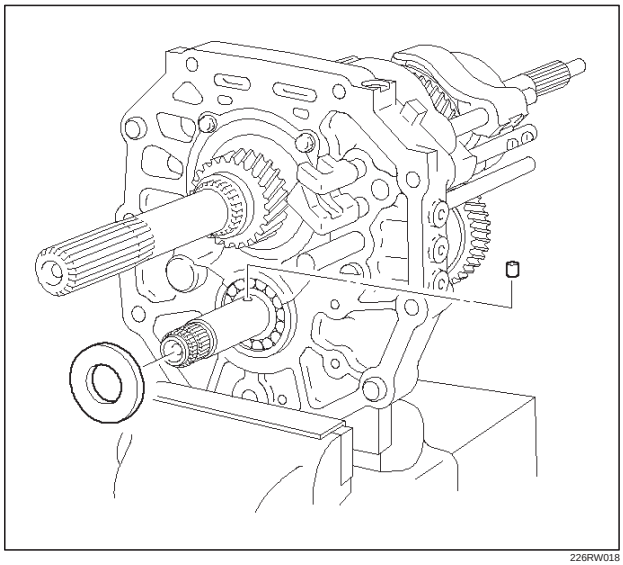

226RW018

16. Remove the bearing plate.
    1. Remove the 4 bolts and bearing retainer.

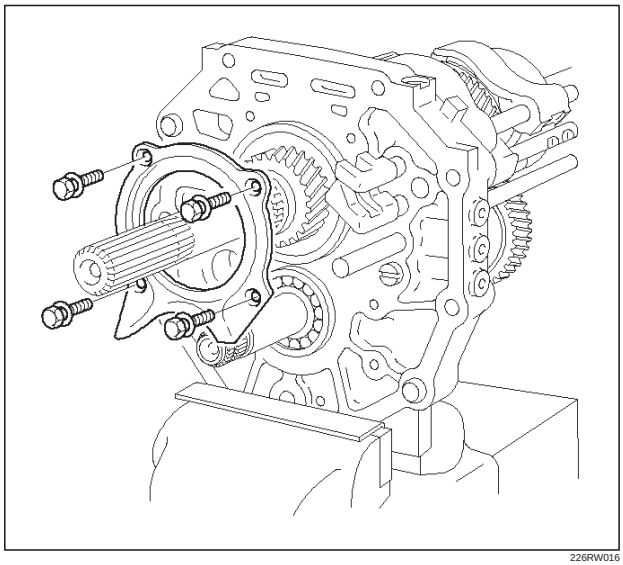

226RW016

17. Remove the reverse idle gear.
    1. Pull out the shaft foward the rear and remove the reverse idle gear.

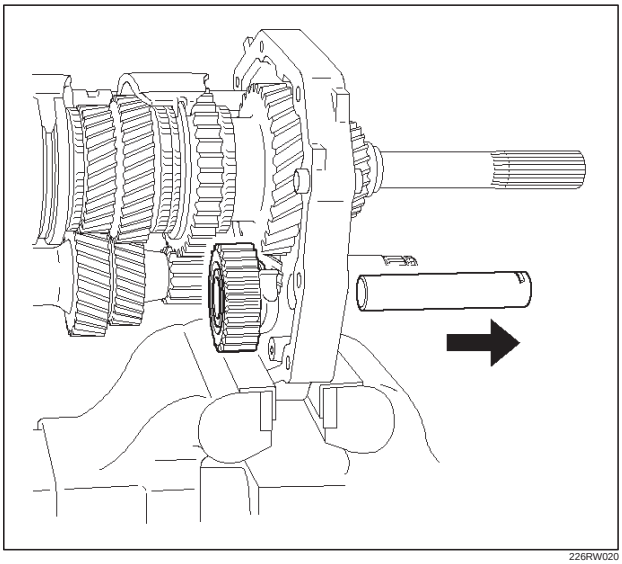

226RW020

18. Remove the counter gear shaft.
    1. Using snap ring plier, remove counter gear shaft center bearing snap ring.

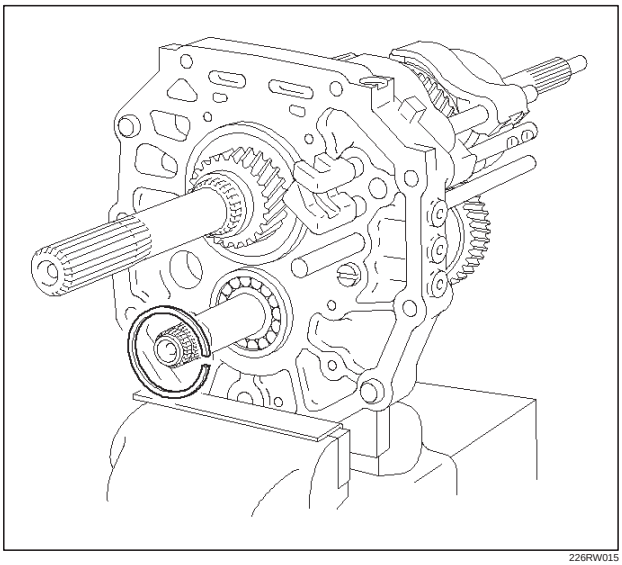

226RW015

Downloaded from www.Manualslib.com manuals search engine

2. Using remover J–42795 and attachment J–42988, remove counter gear shaft center bearing.

NOTE: Be careful not to drop the counter gear, when removing the bearing.

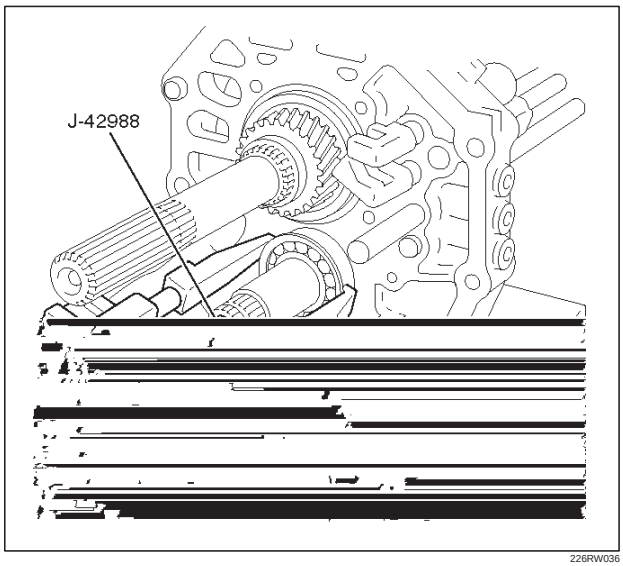

226RW036

3. Remove the counter gear from intermediate plate.

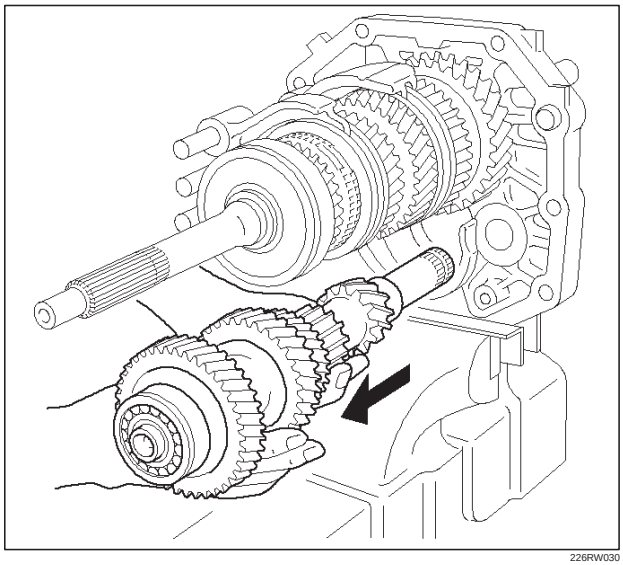

226RW030

19. Disassemble the counter gear shaft assembly.
    1. Using snap ring pliers, remove the counter gear shaft front bearing snap ring.

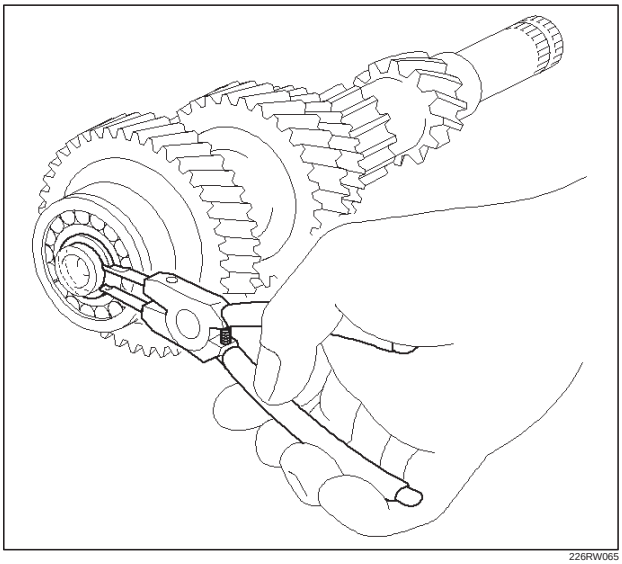

226RW065

2. Using bearing separator J–22912–01 and a press, remove the bearing.

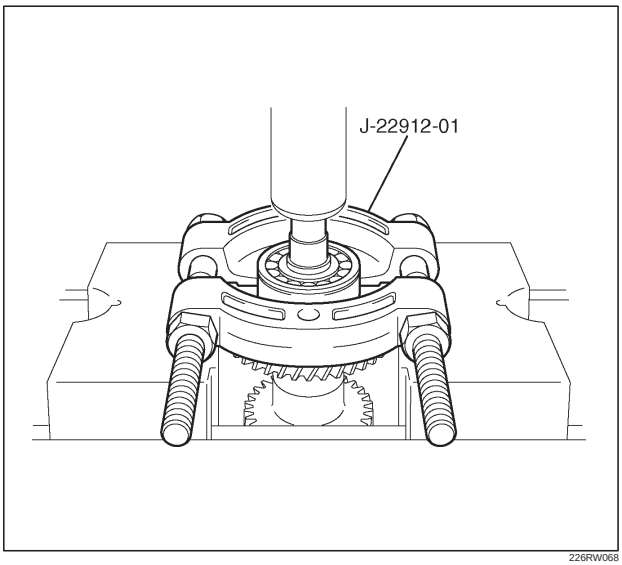

226RW068

Downloaded from www.Manualslib.com manuals search engine

20. Remove the top gear shaft.
    1. Remove the top gear shaft from mainshaft.

NOTE: Don't fall needle roller bearing.

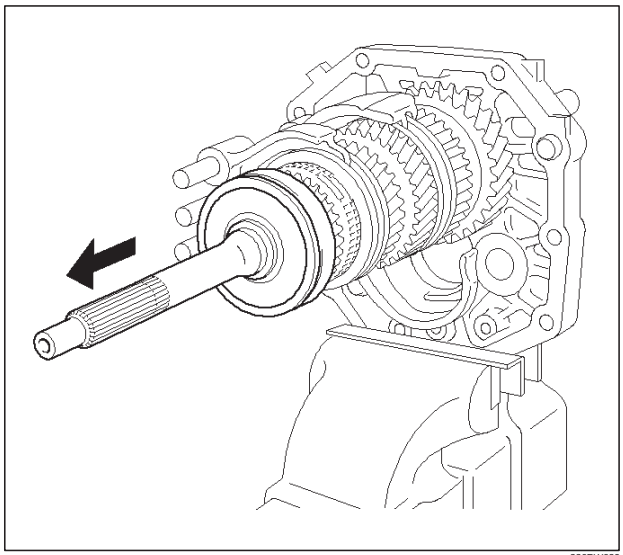

226RW029

    2. Remove the 4th block ring and roller bearing.

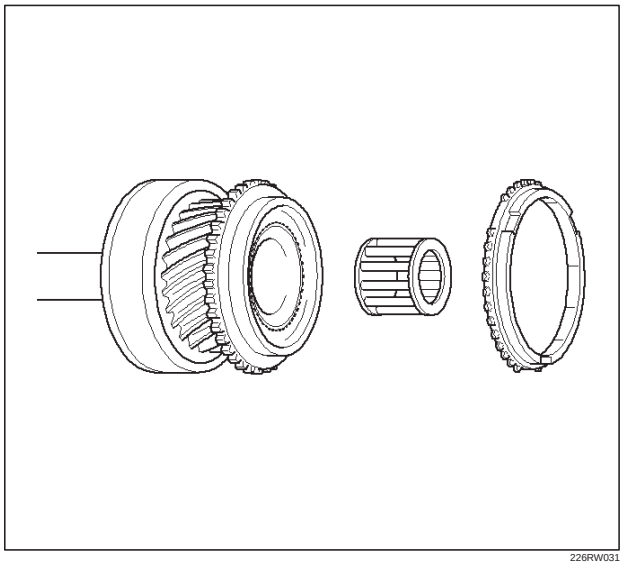

226RW031

21. Disassemble the top gear shaft assembly.
    1. Check for wear or damage.

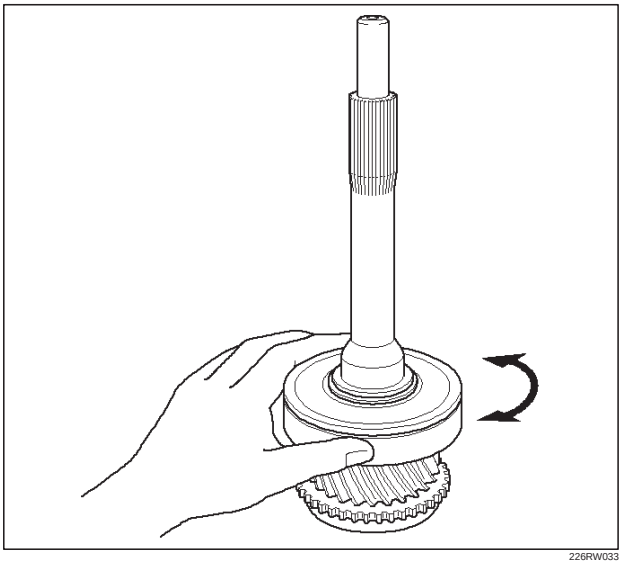

226RW033

    2. Remove the front bearing shaft snap ring.

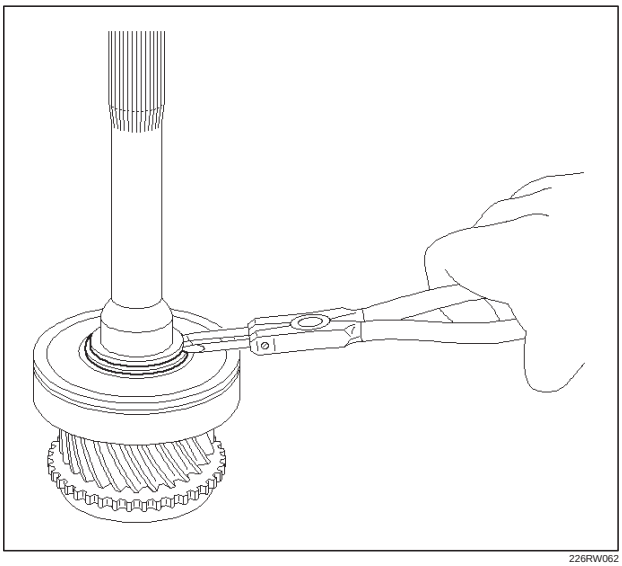

226RW062

Downloaded from www.Manualslib.com manuals search engine

3. Using bearing separator J–22912–01 and a press, remove the bearing.

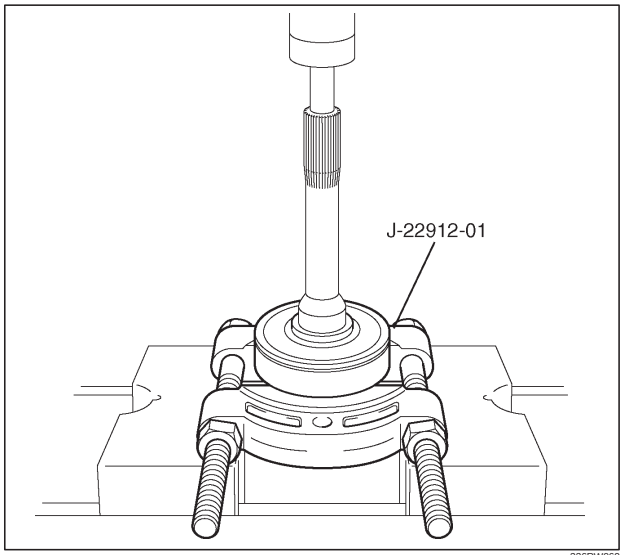

226RW069

22. Remove the mainshaft.
    1. Remove mainshaft bearing snap ring.

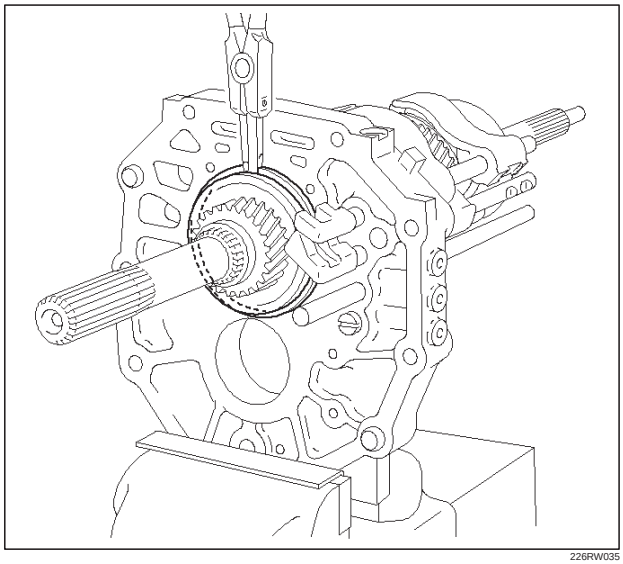

226RW035

2. Using a plastic hammer, tap the 5th-reverse shift rod at the reverse shift side.

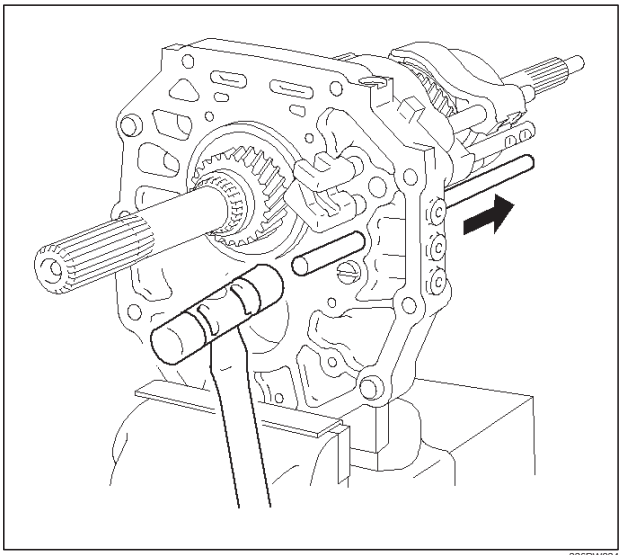

226RW034

3. Remove the intermediate plate from a vise.
4. Remove the mainshaft, 1st-2nd shift arm and 3rd-4th shift arm.

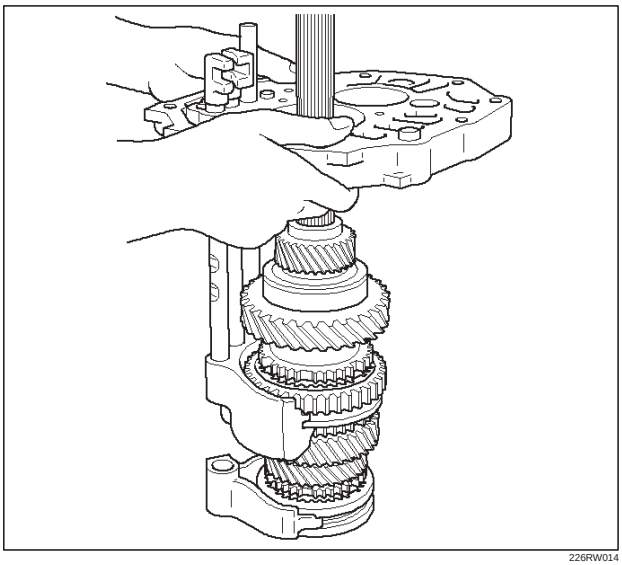

226RW014

Downloaded from www.Manualslib.com manuals search engine

23. Disassemble the main shaft assembly.
    1. Inspect each gear thrust clearance.
        1. Using thickness gauge, inspect thrust clearance (1st gear, 3rd gear).

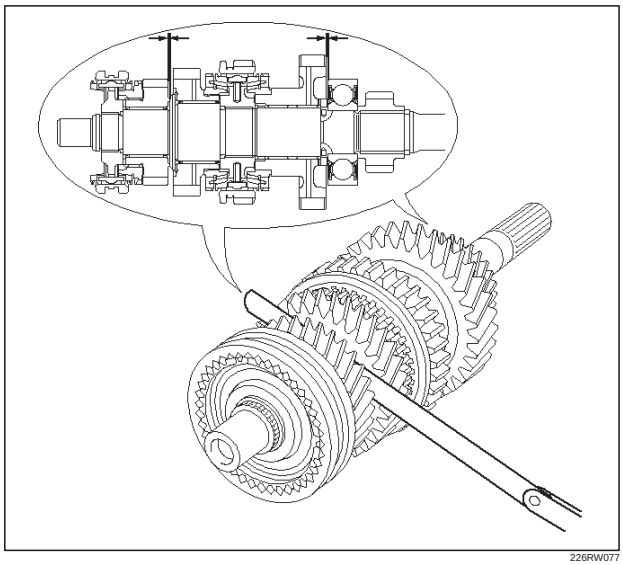

226RW077

        2. Mount the mainshaft through the aluminum plate in a vise.
        3. Using a dial indicator, measure each gear thrust clearance.

Gear	Standard Clearanse
1st	0.15 – 0.45 mm (0.0059 – 0.0177 in)
2nd	0.10 – 0.25 mm (0.0039 – 0.0098 in)
3rd	0.10 – 0.25 mm (0.0039 – 0.0098 in)

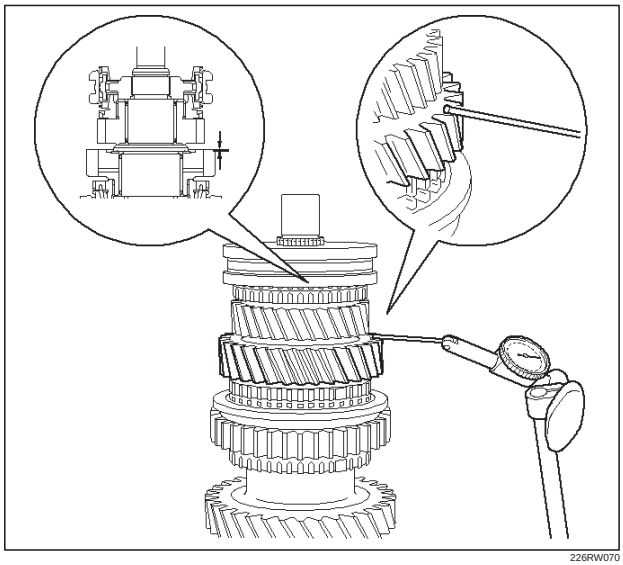

226RW070

    2. Inspect each gear radial clearance.
        1. Using a dial indicator, measure the radial clearance of each gear.

Gear	Standard Clearanse
1st	0.020 – 0.074 mm (0.00078 – 0.00291 in)
2nd	0.015 – 0.068 mm (0.00059 – 0.00268 in)
3rd	0.015 – 0.068 mm (0.00059 – 0.00268 in)

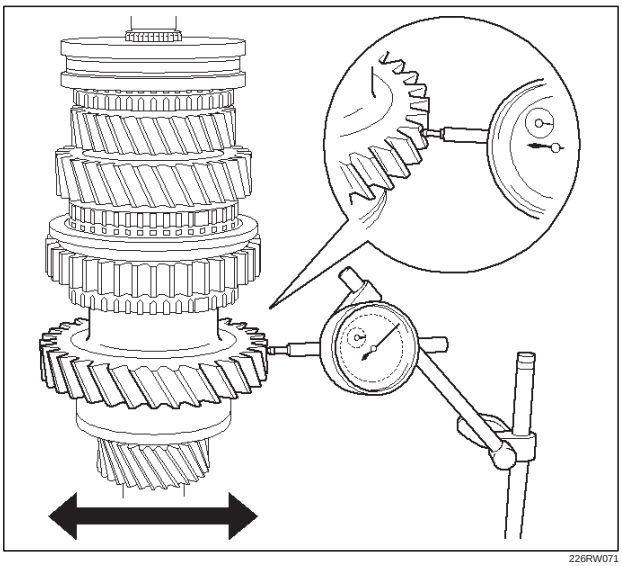

226RW071

    3. Using 2 screwdrivers and hammer, tap out the snap ring.

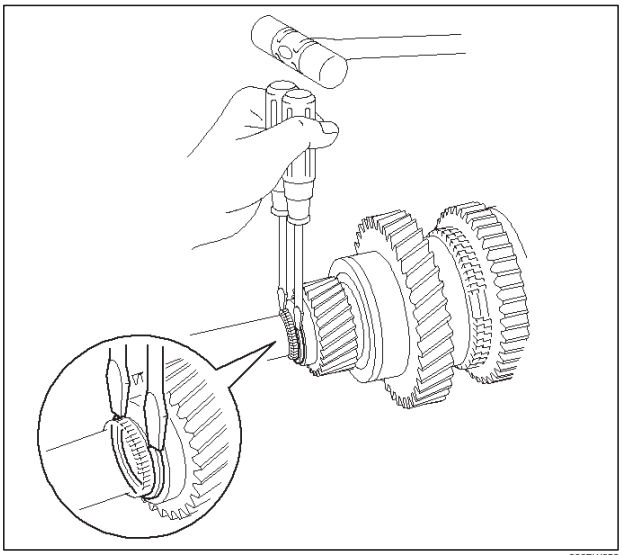

226RW053

Downloaded from www.Manualslib.com manuals search engine

4. Using bearing separator J–22912–01 and a press, remove the following parts.
   1. 5th gear (1).
   2. Mainshaft bearing (2).
   3. 1st gear thrust washer (3).
   4. 1st gear (4).

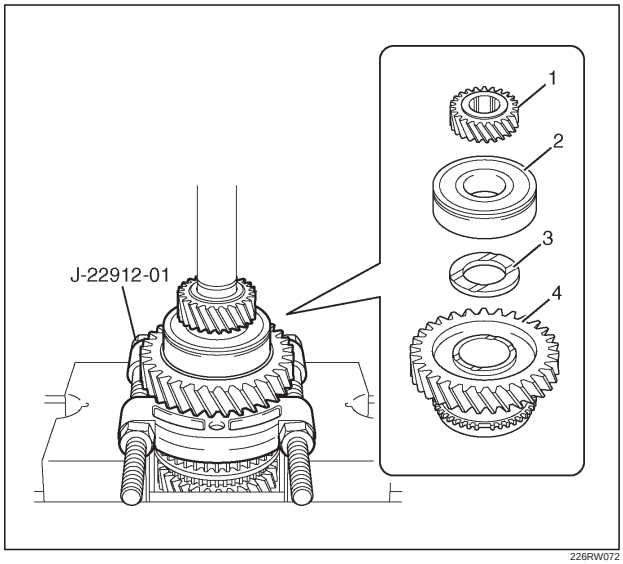

226RW072

5. Remove following parts from mainshaft.
   1. Synchronizer assembly (1).
   2. 1st gear thrust washer pin (3).
   3. 1st gear needle roller bearing (4).
   4. 1st gear bearing spacer (2).

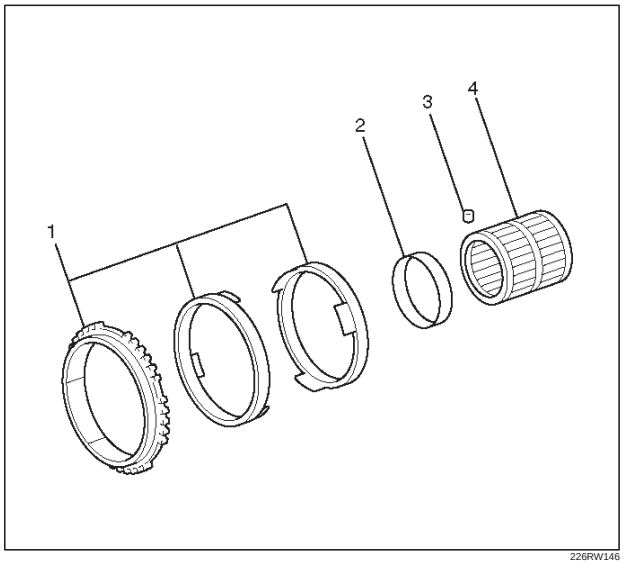

226RW146

6. Using 2 screwdrivers and hammer, tap out snap ring.

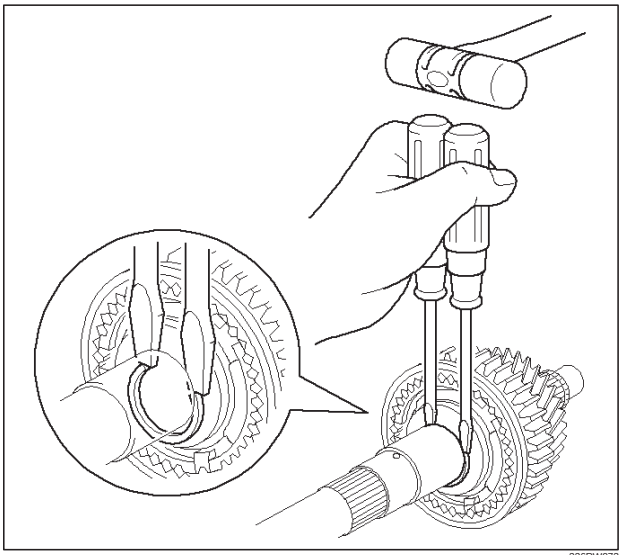

226RW073

7. Using bearing separator J–22912–01 and a press, remove the following parts.
   1. Clutch hub No.1 assembly (1).
   2. Synchronizer assembly (2).
   3. 2nd gear (3).
   4. 2nd gear needle roller bearing (4).

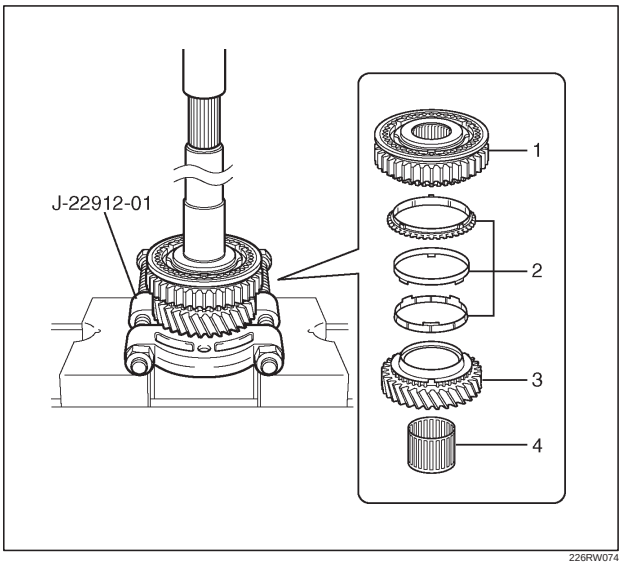

226RW074

Downloaded from www.Manualslib.com manuals search engine

8. Remove the reverse gear from clutch hub No.1.
9. Remove the 3 inserts and 3 compression springs.
   - When removing the inserts, push the insert spring with a screwdriver.

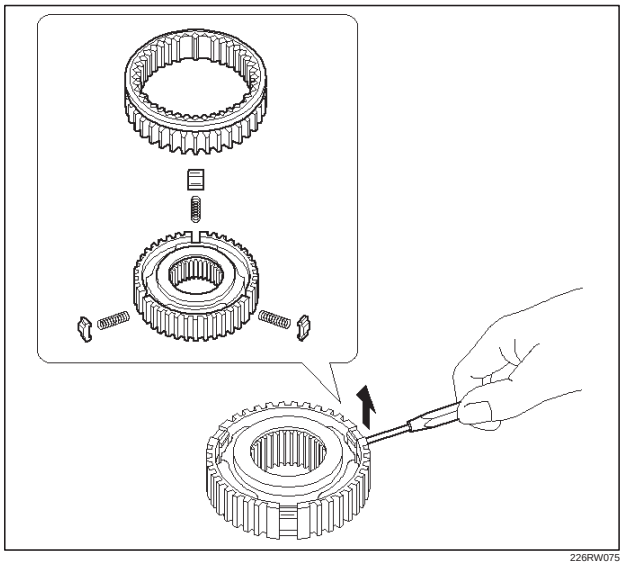

226RW075

10. Remove the snap ring.

NOTE: Don't damage the bearing surface.

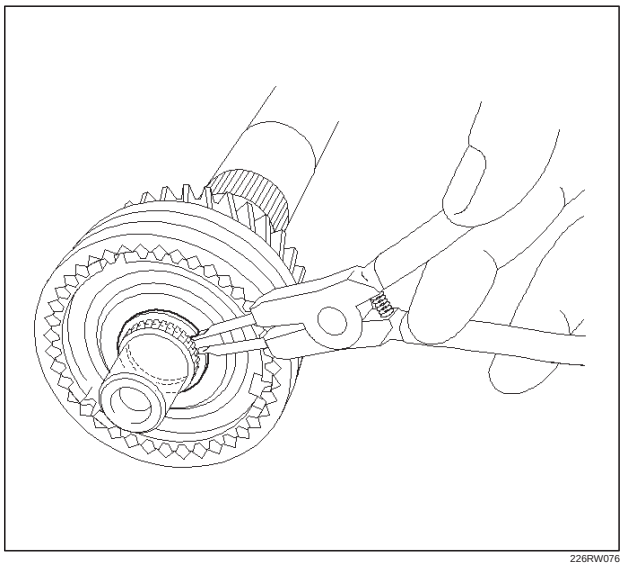

226RW076

11. Using a press, remove following parts.
    1. Clutch hub No.2 assembly (1).
    2. 3rd block ring (2).
    3. 3rd gear (3).
    4. 3rd gear needle roller bearing (4).

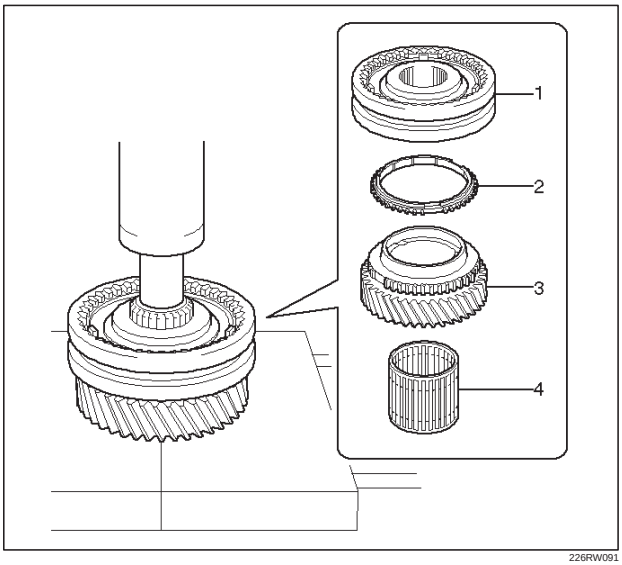

226RW091

12. Using screwdriver, remove the 2 insert springs, hub sleeve No.2, clutch hub No.2 and 3 inserts.

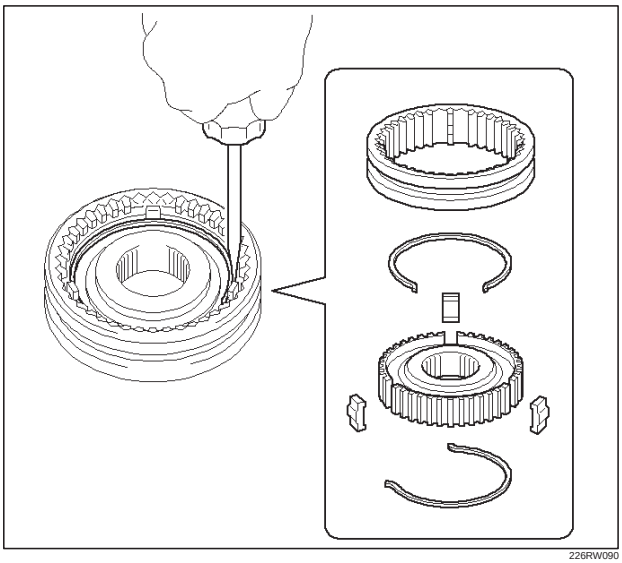

226RW090

Downloaded from www.Manualslib.com manuals search engine

24. Remove the shift parts and interlock parts.
    1. Mount the intermediate plate through the aluminum plate in a vise.
    2. Using a plastic hammer, tap the 5th shift rod on the neutral.

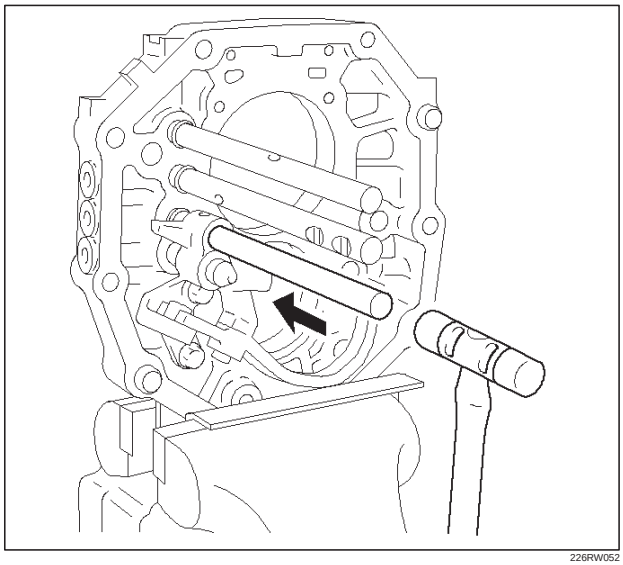

226RW052

    3. Using a torx socket wrench(T40), remove the 4 plugs.

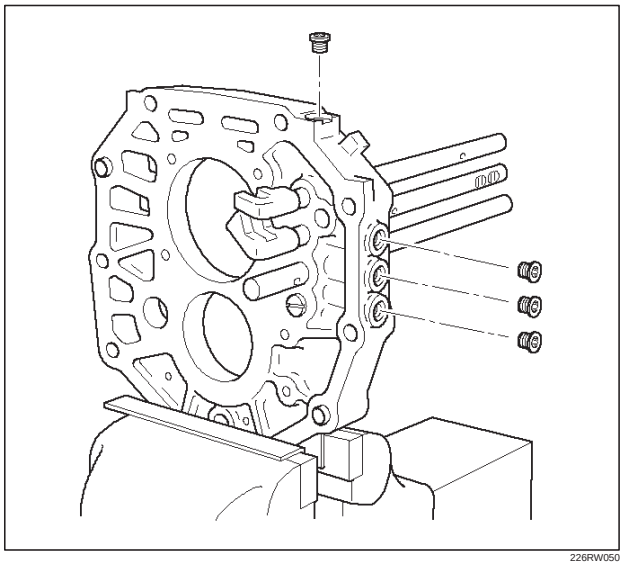

226RW050

    4. Using a magnetic finger, remove 3 springs and balls.

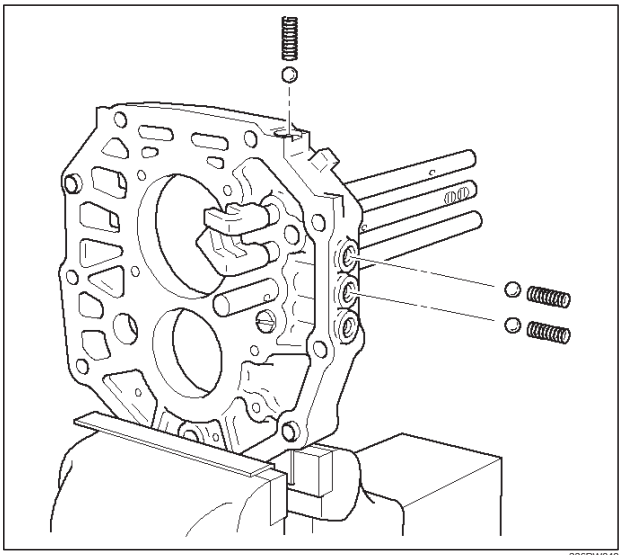

226RW049

    5. Using 2 screwdrivers and a hammer, remove 2 snap rings from each shift fork rod.

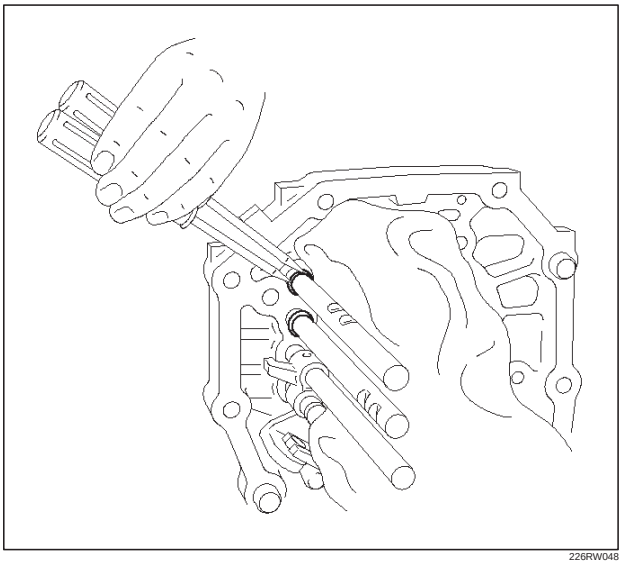

226RW048

Downloaded from www.Manualslib.com manuals search engine

6. Pull out the 3rd–4th shift rod at the rear.

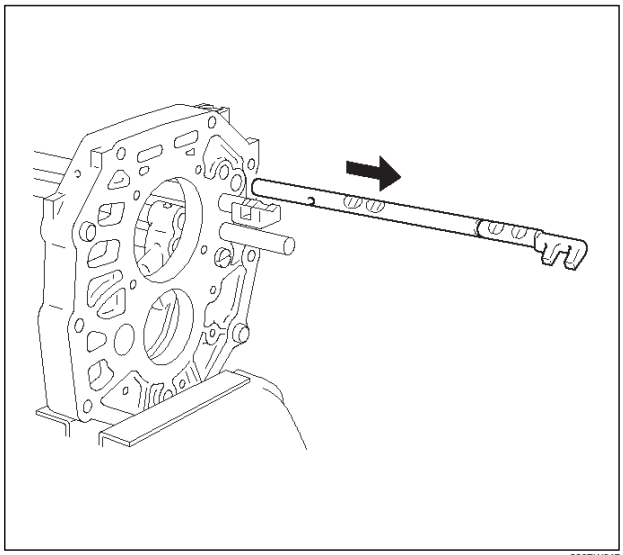

226RW047

7. Using a magnetic finger, remove the interlock pin and straight pin.

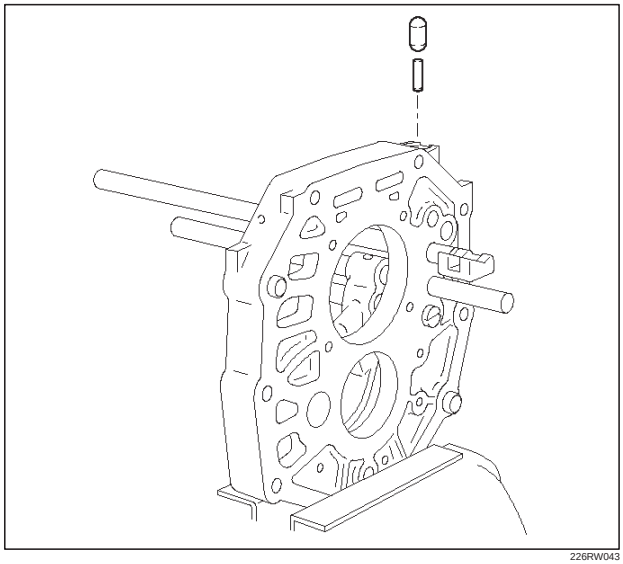

226RW043

8. Pull out the 1st–2nd shift rod at the rear.

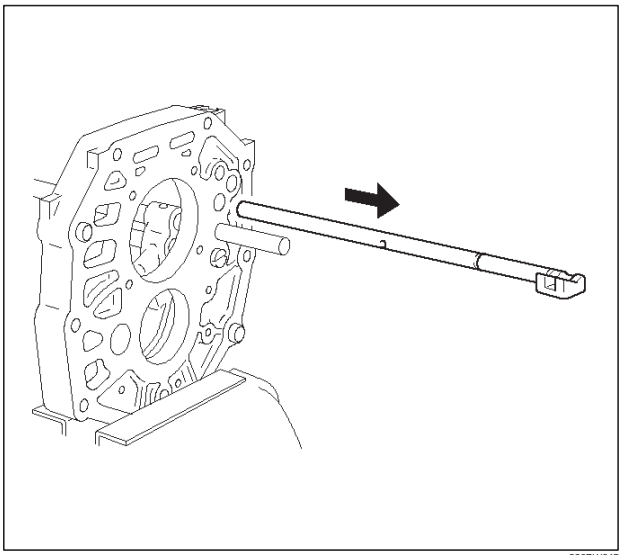

226RW045

9. Using a magnetic finger, remove the interlock pin.

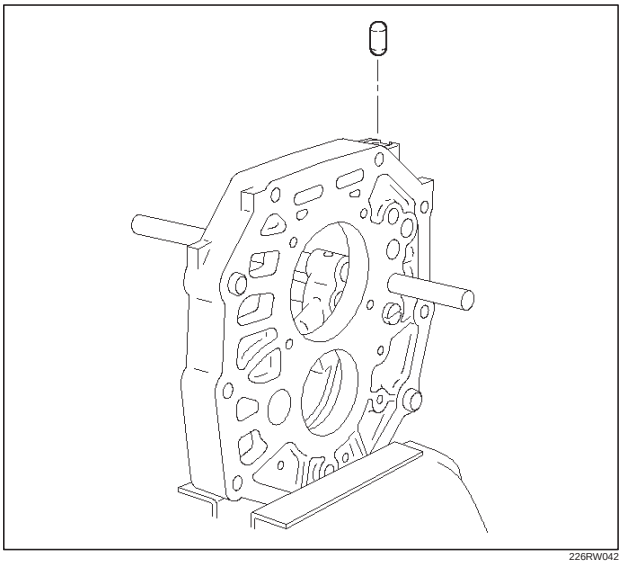

226RW042

Downloaded from www.Manualslib.com manuals search engine

10. Using 2 screwdrivers and a hammer, remove 2 snap rings.

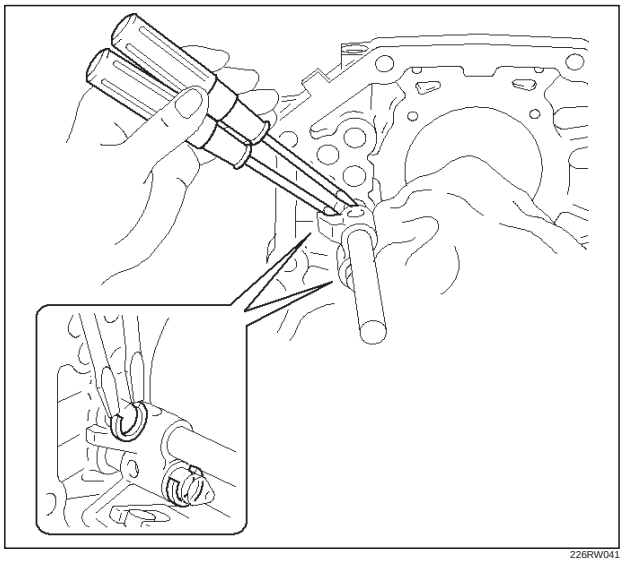

226RW041

11. Pull out the 5th-reverse shift rod at the front.

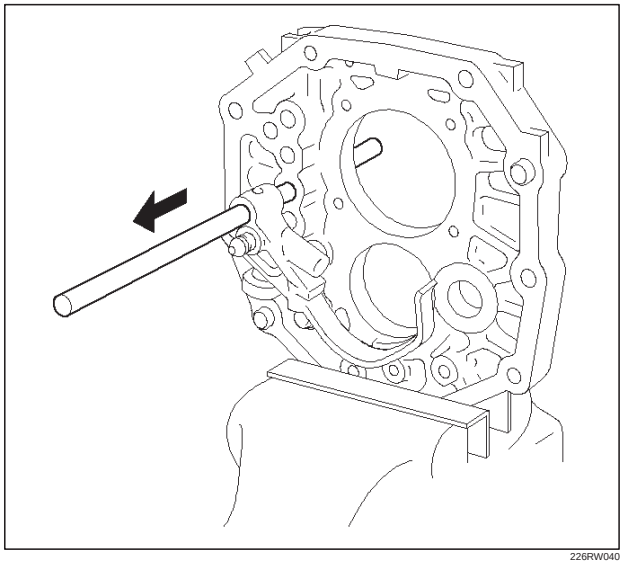

226RW040

12. Using a magnetic finger, remove the interlock pin from the intermediate plate. Remove the ball from the reverse shift arm No.1.

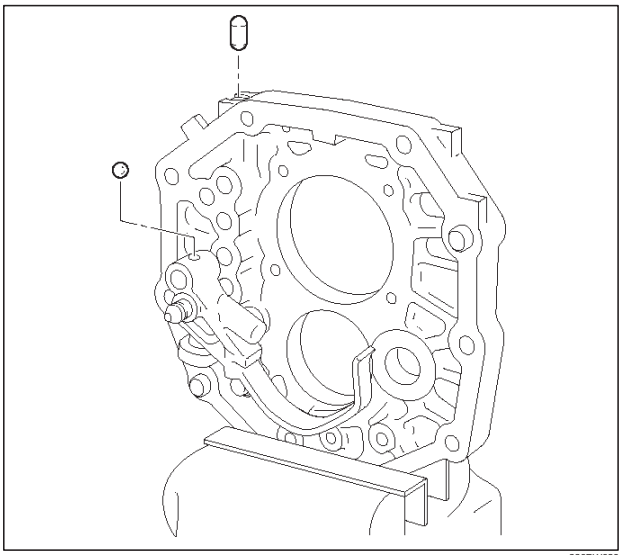

226RW039

13. Pull out at the rear reverse shift rod, reverse shift arm No.1 and reverse shift arm No.2 at the same time.

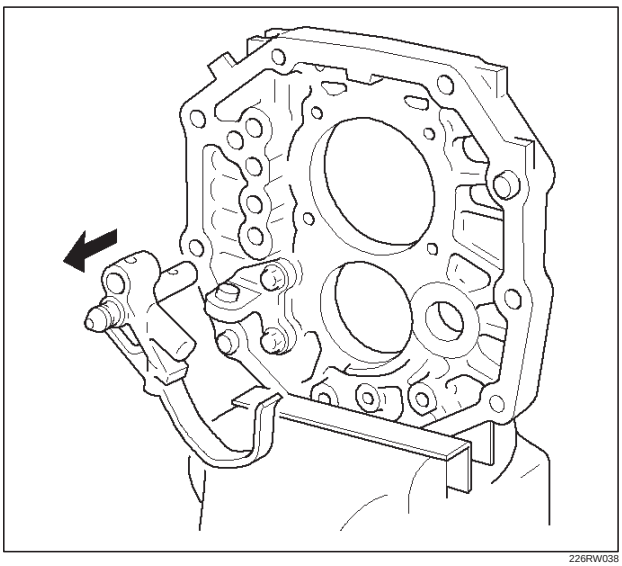

226RW038

Downloaded from www.Manualslib.com manuals search engine

14. Pull out reverse shift rod from reverse shift arm No.1.

NOTE: Be sure remove at the rear.

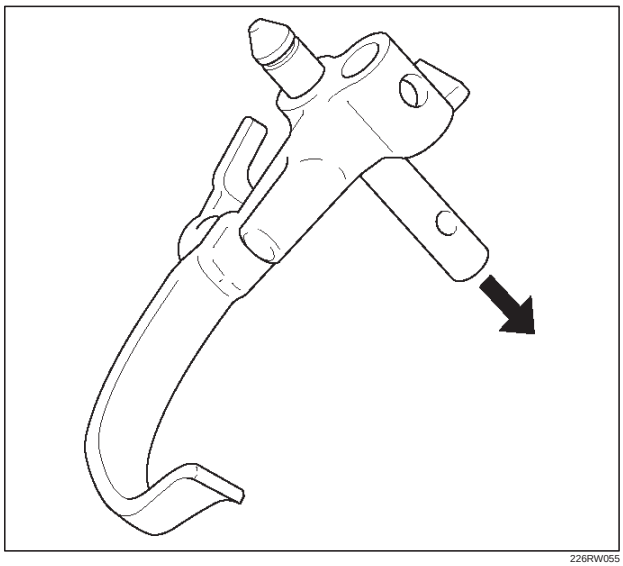

226RW055

15. Using a magnetic finger, remove the ball and spring from reverse shift arm No.1.

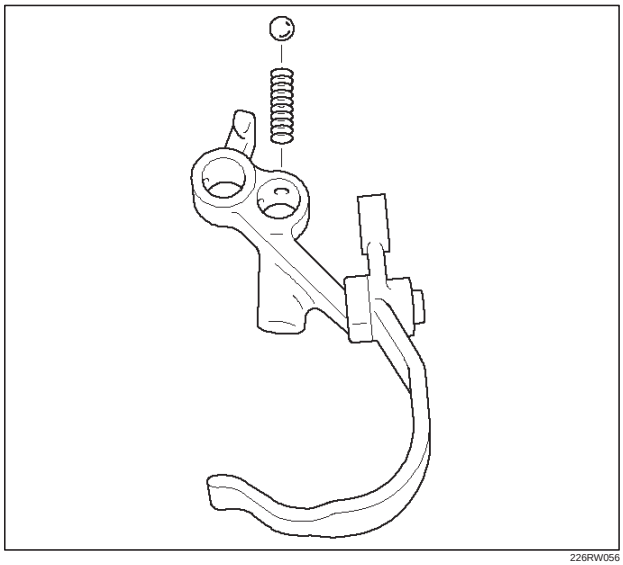

226RW056

16. Remove the reverse shift arm No.2 E–ring. Remove the reverse shift arm No.2 from reverse shift arm No.1.

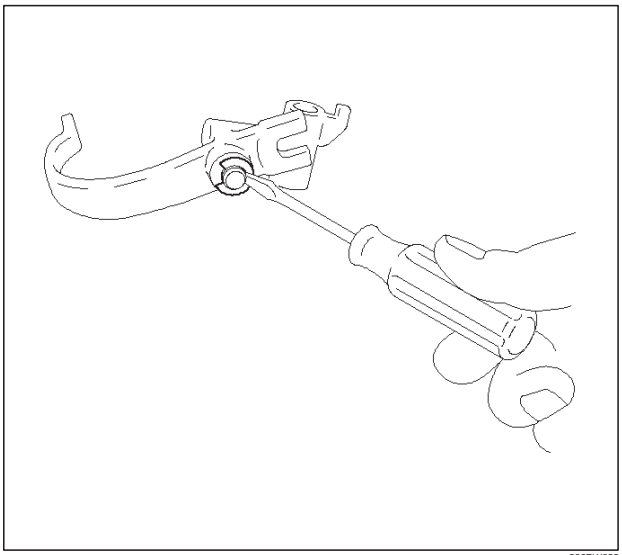

226RW089

17. Remove the 2 bolts and reverse shift arm bracket.

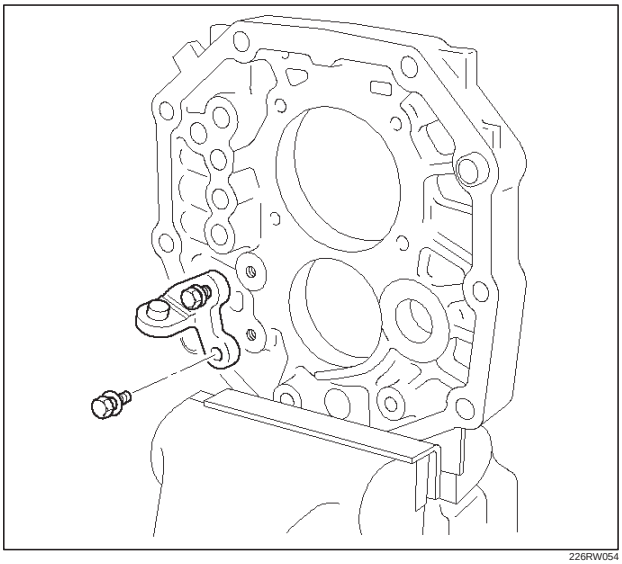

226RW054

Downloaded from www.Manualslib.com manuals search engine

Inspection

1. Counter 5th gear radial clearance.
   1. Install the following parts to the counter gear shaft.
      1. Counter 5th gear thrust washer pin (1).
      2. Counter 5th gear thrust washer (2).
      3. Counter 5th gear needle bearing(3).
      4. Counter 5th gear (4).

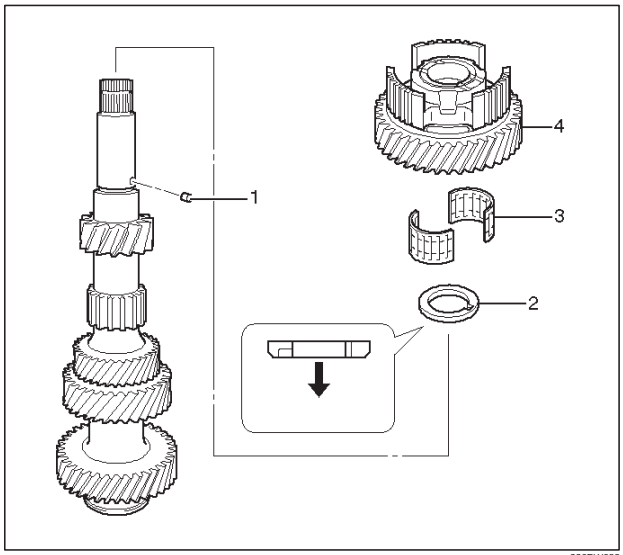

226RW088

   2. Mount the counter gear shaft through the aluminum plate in vise.
   3. Using a dial indicator, measure the counter 5th gear radial clearance.

Standard: 0.015 – 0.068 mm (0.00059 – 0.00268 in)

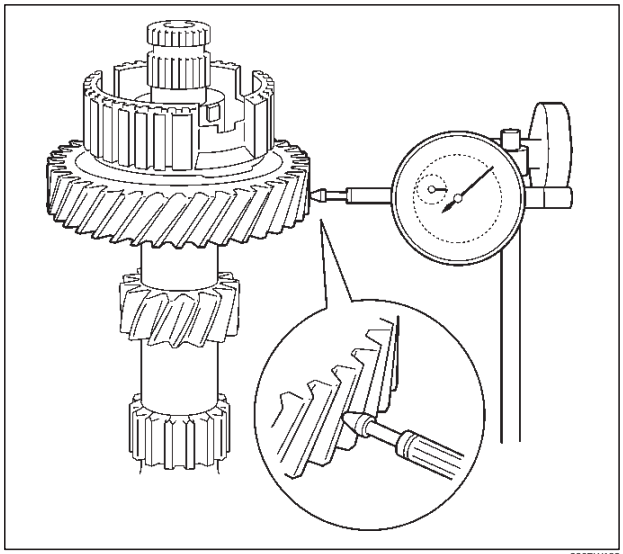

226RW183

   4. Using a inside dial indicator, measure the gear inside diameter.

Standard: 38.015 – 38.040 mm (1.49665 – 1.49763 in)

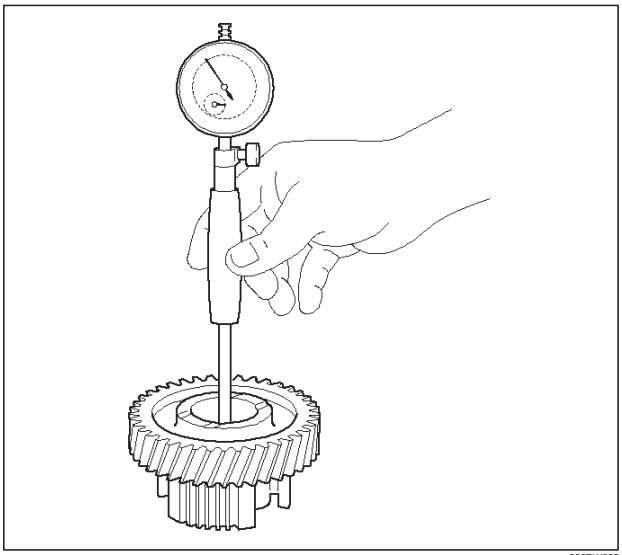

226RW085

2. 5th-reverse shift arm and hub sleeve No.3 clearance.
   1. Using a vernier caliper, measure the 5th-reverse shift arm thickness.

Reference: 10.2 mm (0.402 in)

   2. Using a vernier caliper, measure the center groove of hub sleeve No.3. Calculate the clearance between the hub sleeve No.3 and shift arm.

Standard: 0.26 – 0.84 mm (0.0102 – 0.0331 in)

Reference: Center groove dimension 10.5mm (0.413 in)

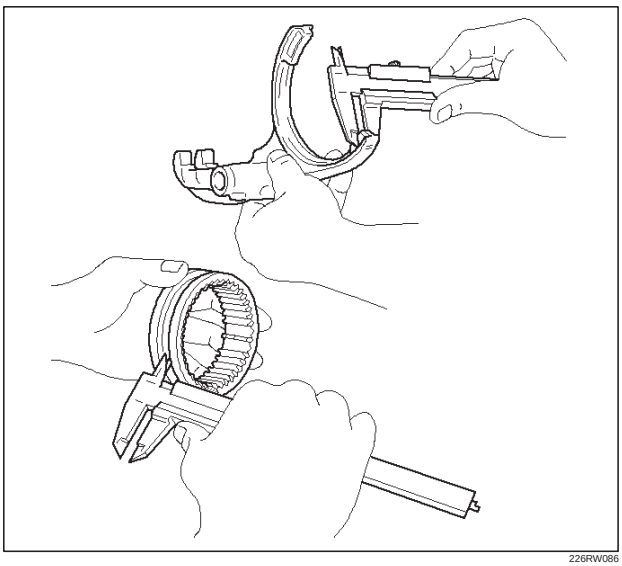

226RW086

Downloaded from www.Manualslib.com manuals search engine

3. Reverse block ring set.
   1. Using a thickness gauge, measure the clearance between the counter 5th gear spline piece and reverse block ring.

Standard: 0.7 – 1.7 mm (0.028 – 0.067 in)

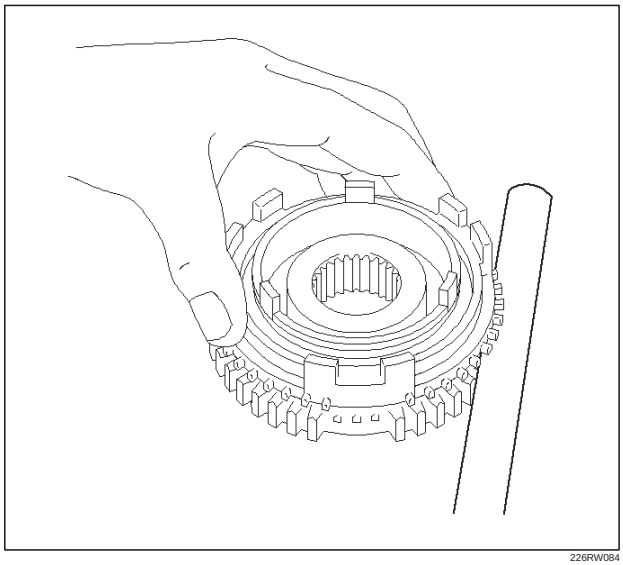

226RW084

4. Reverse idle gear and reverse idle gear shaft.
   1. Mount the reverse idle gear and reverse idle gear shaft in a vise.
   2. Using a dial indicator, measure the reverse idle gear radial clearance.

Standard: 0.040 – 0.082 mm (0.0016 – 0.0032 in)

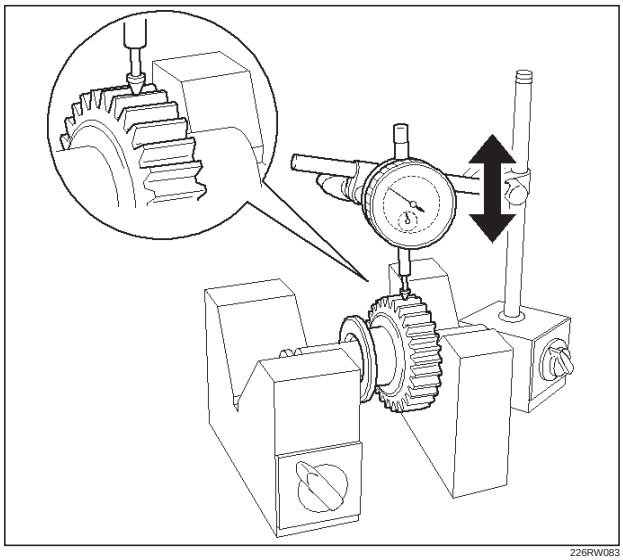

226RW083

   3. If the clearance exceeds the maximum, measure the gear inside diameter and shaft diameter.

Standard

Shaft Diameter: 23.979 – 24.000 mm (0.94405 – 0.94488 in)

Gear Diameter: 24.040 – 24.061 mm (0.94645 – 0.94728 in)

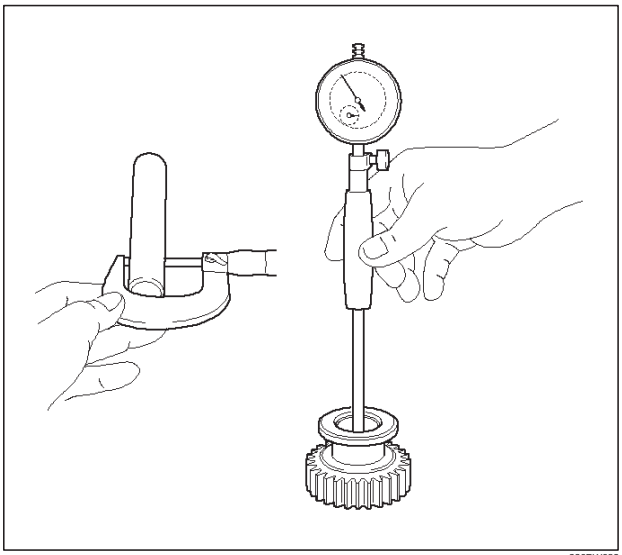

226RW082

5. Reverse shift arm No.2 thrust clearance.
   1. Using a thickness gauge, measure the clearance between the reverse idle gear and shift arm No.2.

Standard: 0.05 – 0.35 mm (0.002 – 0.014 in)

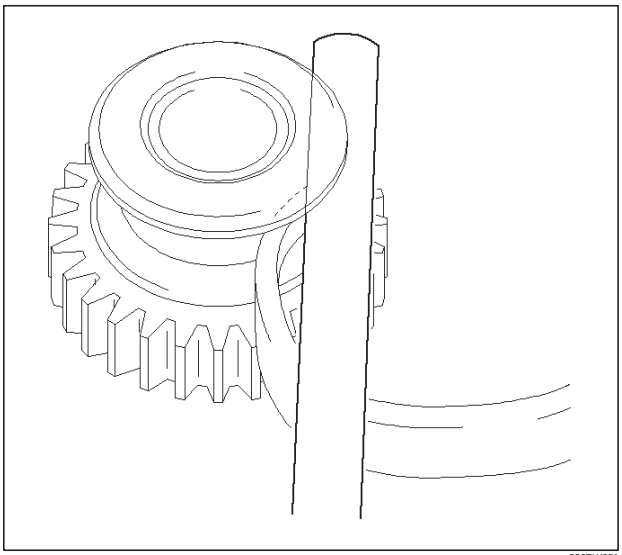

226RW081

Downloaded from www.Manualslib.com manuals search engine

Reassembly

1. Install the top gear shaft assembly.
   1. Using installer J–42904 and a press, install a new bearing.

NOTE: Outer race snap ring groove (1) toward front.

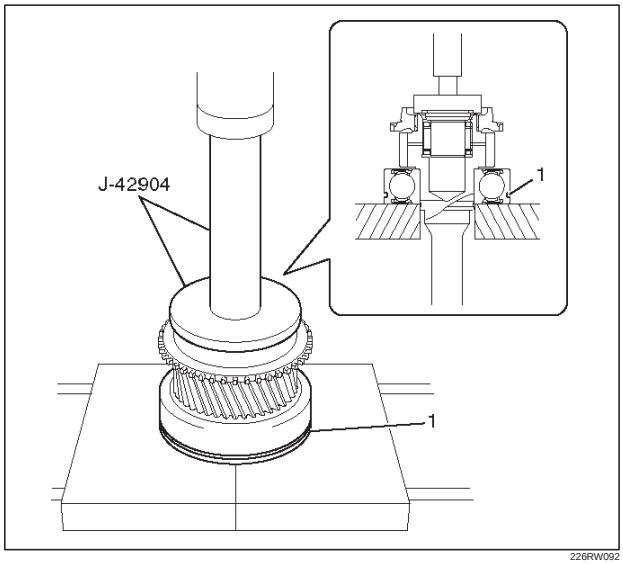

226RW092

   2. Select a snap ring that will allow minimum axial play.

Mark	Thickness
A	2.10 – 2.15 mm (0.083 – 0.085 in)
B	2.15 – 2.20 mm (0.085 – 0.087 in)
C	2.20 – 2.25 mm (0.087 – 0.089 in)
D	2.25 – 2.30 mm (0.089 – 0.091 in)
E	2.30 – 2.35 mm (0.091 – 0.093 in)
F	2.35 – 2.40 mm (0.093 – 0.095 in)
G	2.40 – 2.45 mm (0.095 – 0.097 in)

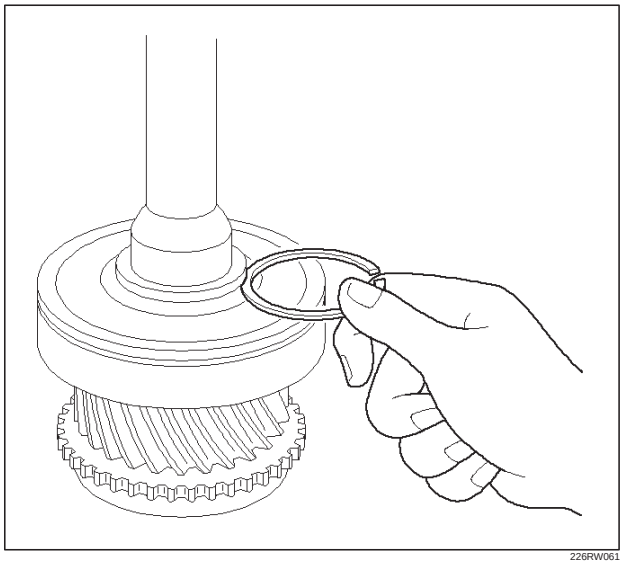

226RW061

   3. Using a snap ring expander, install the new snap ring.

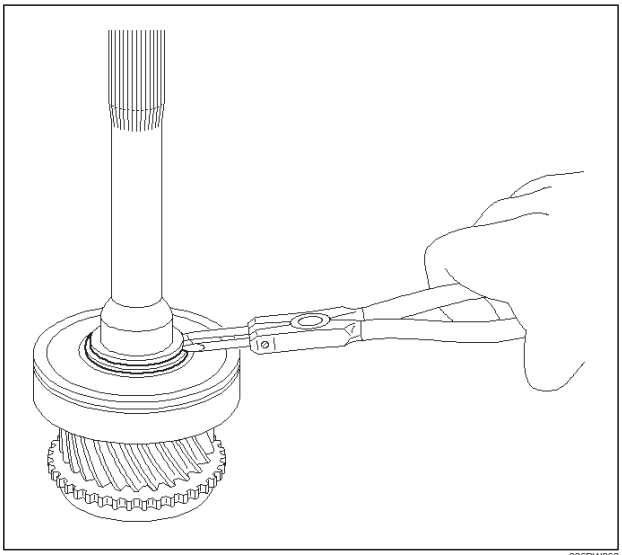

226RW062

   4. Install the 4th block ring.

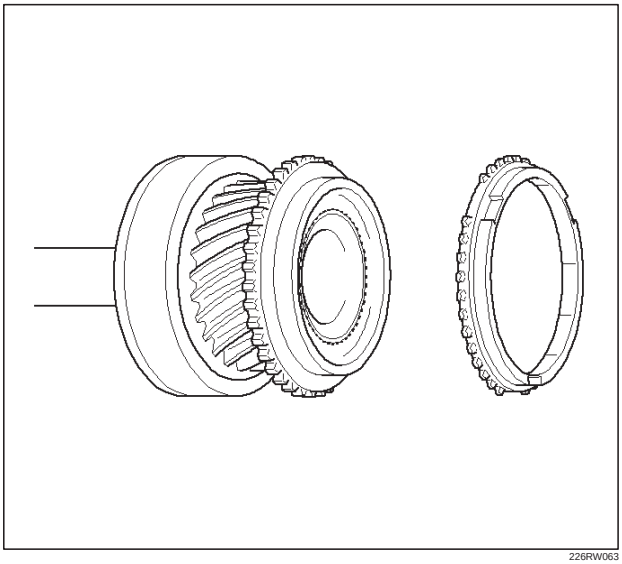

226RW063

Downloaded from www.Manualslib.com manuals search engine

5. Using a thickness gauge, measure the clearance between the 4th block ring back and gear spline end.

Standard: 0.75 – 1.65 mm (0.030 – 0.065 in)

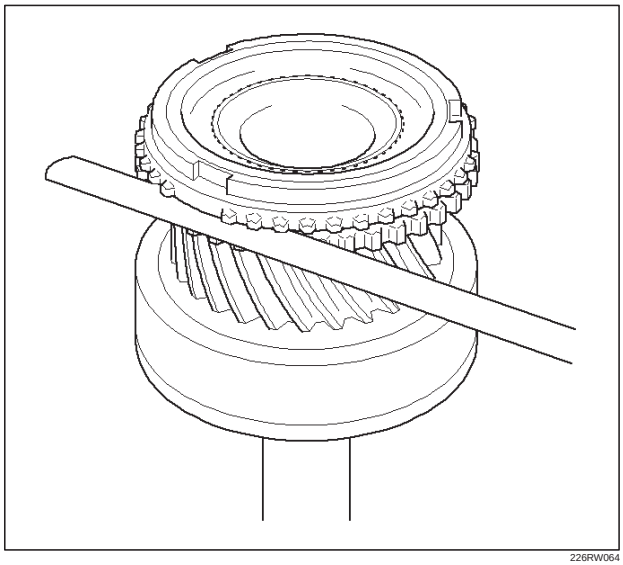

226RW064

6. Check the braking effect of the block ring. Turn the block ring in one direction while pushing it to the gear cone. Check that the ring locks. If it does not lock, replace the block ring.

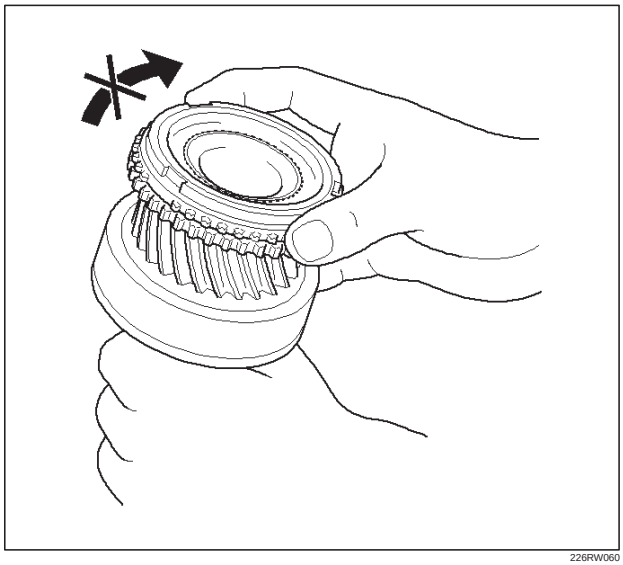

226RW060

7. Install the needle roller bearing.

2. Reassemble the mainshaft assembly.

NOTE: Apply all parts with gear oil before installing them.

3. Inspect block ring.

1. Using a thickness gauge, measure the clearance between the synchronizer ring back and gear spline end.

Gear	Standard Clearanse
1st	0.80 – 1.60 mm (0.032 – 0.063 in)
2nd	0.65 – 1.75 mm (0.026 – 0.069 in)
3rd	0.75 – 1.65 mm (0.030 – 0.065 in)

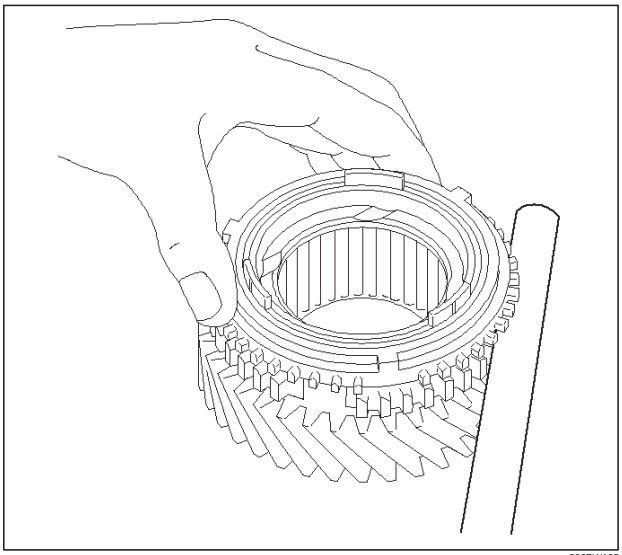

226RW105

2. Turn the synchronizer ring in one direction while pushing it to the gear cone. Check that the ring locks.

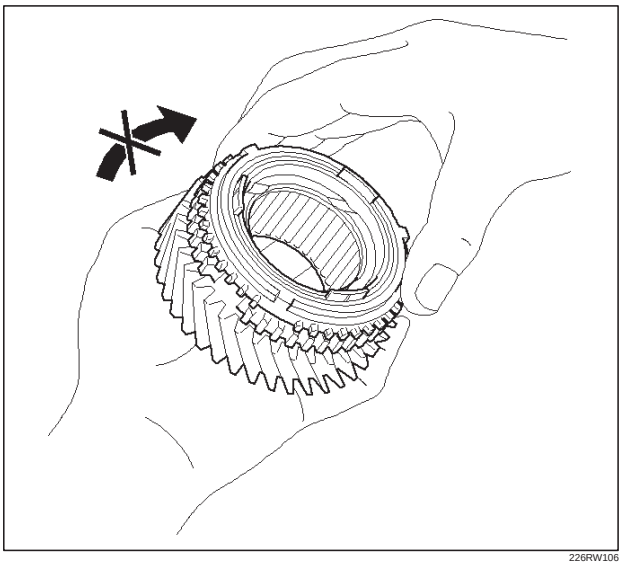

226RW106

Downloaded from www.Manualslib.com manuals search engine

4. Inspect hub sleeve and shift arm.

1st–2nd shift arm

1. Using a vernier caliper, measure center groove of the 1st–2nd shift arm.

Reference: 5.28 mm (0.208 in)

2. Using a vernier caliper, measure flange of the reverse gear. Calculate the clearance between the reverse gear and shift arm.

Reference: Reverse gear flange thickness 5.0 mm (0.197 in)

Standard: 0.15 – 0.41 mm (0.006 – 0.016 in)

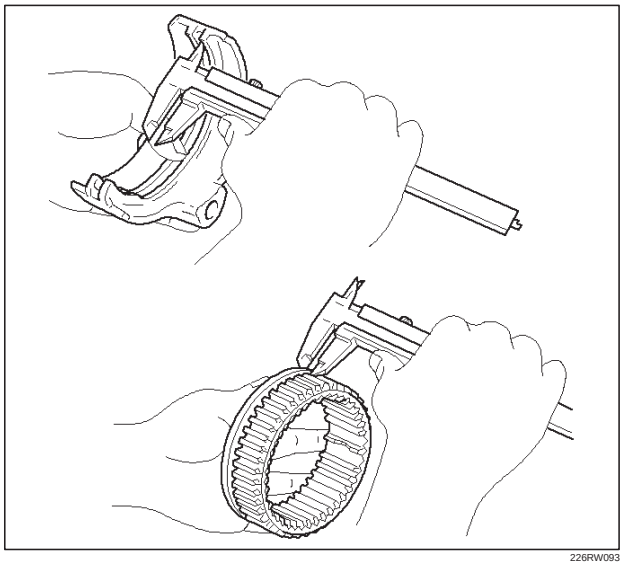

226RW093

3rd–4th shift arm

1. Using a vernier caliper, measure tip of the shift arm thickness.

Reference: 10.0mm (0.39 in)

2. Using a vernier caliper, measure center groove of the hub sleeve No.2. Calculate the clearance between the hub sleeve No.2 and shift arm.

Reference: Center groove dimension 10.2 mm (0.402 in)

Standard: 0.15 – 0.35 mm (0.006 – 0.014 in)

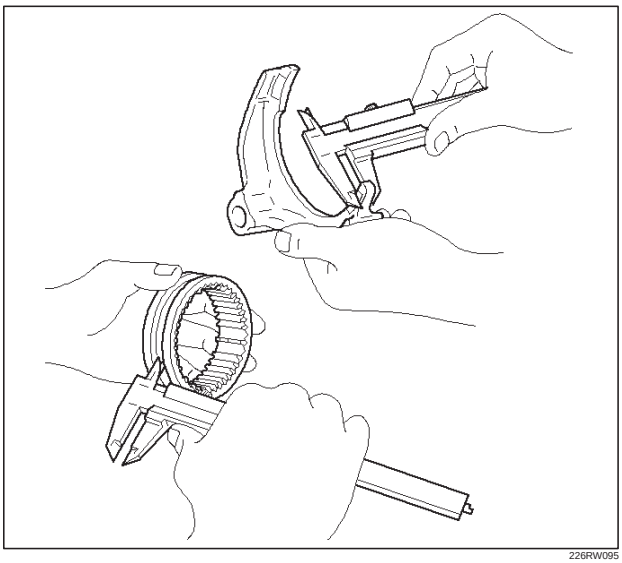

226RW095

5. Inspect clutch hub and hub sleeve.
   1. Check for wear or damage.
   2. Install the hub sleeve to the clutch hub, and check sliding smoothly.

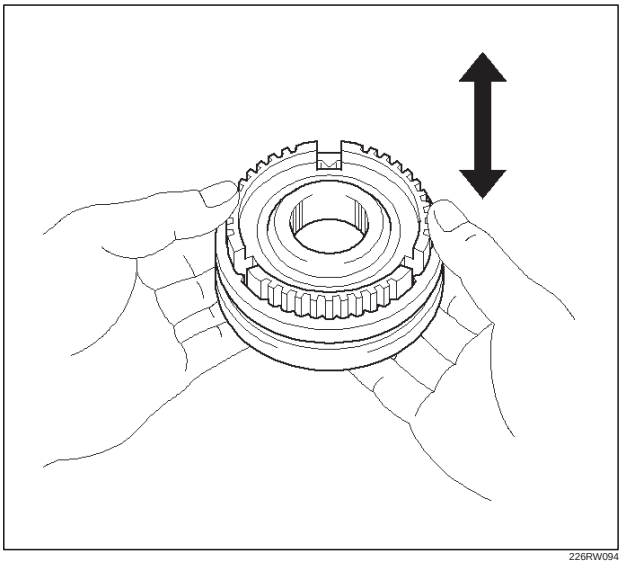

226RW094

6. Inspect gear inside diameter.
   1. Using a inside dial indicator, measure the gear inside diameter.

Gear	Standard Diameter
1st	46.015 – 46.040 mm (1.8116 – 1.8126 in)
2nd	53.015 – 53.040 mm (2.0872 – 2.0882 in)
3rd	44.015 – 44.040 mm (1.7329 – 1.7339 in)

Downloaded from www.Manualslib.com manuals search engine

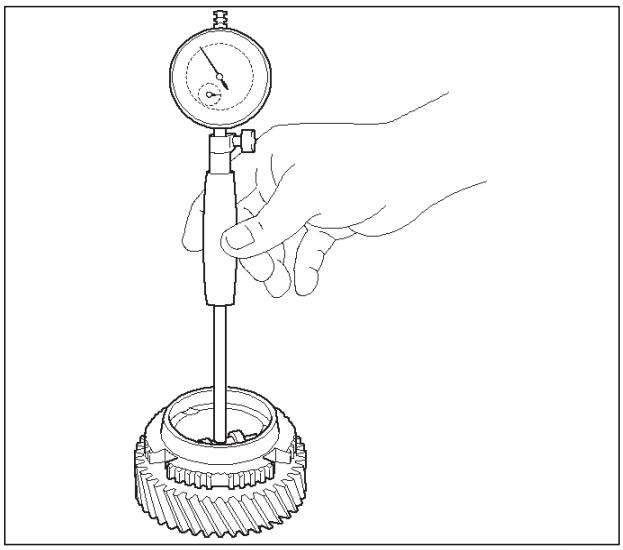

226RW096

7. Inspect mainshaft.
   1. Using a micrometer, measure the outer diameter of the mainshaft journal.

Measure Position	Standard
A	37.984 – 38.000 mm (1.4954 – 1.4961 in)
B	46.984 – 47.000 mm (1.8498 – 1.8504 in)
C	38.979 – 38.995 mm (1.5346 – 1.5352 in)

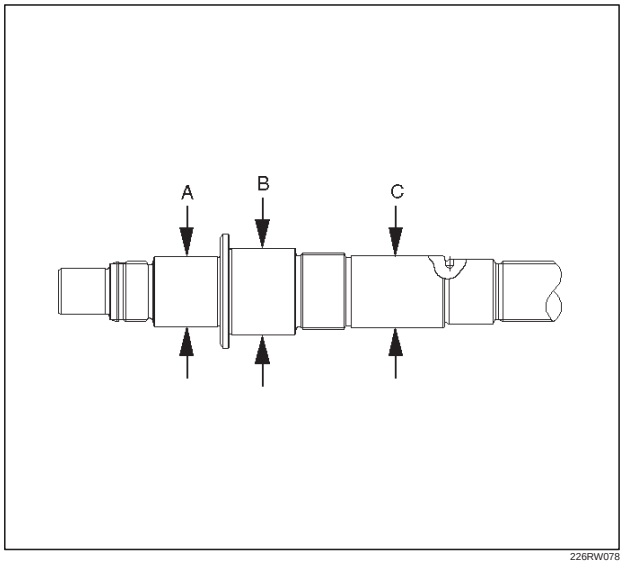

226RW078

   2. Using a micrometer, measure the mainshaft flange thickness.

Standard: 5.0 mm (0.197 in)

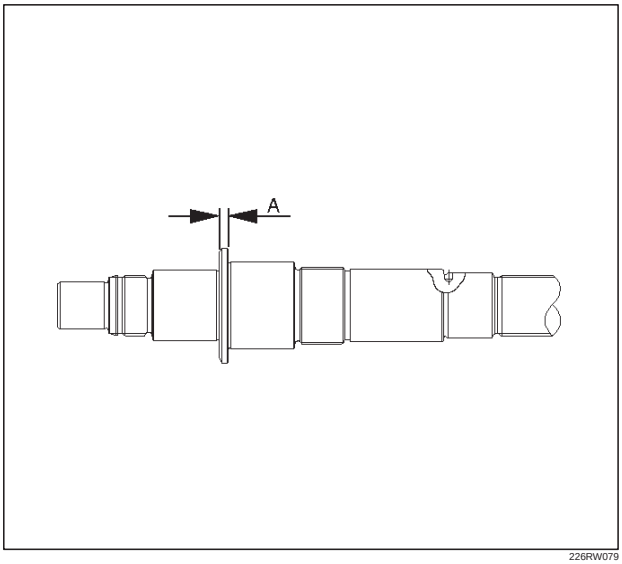

226RW079

   3. Install the mainshaft to V-blocks.
   4. Use a dial indicator to measure the mainshaft central portion run-out.

Standard: less than 0.015 mm (0.0006 in)

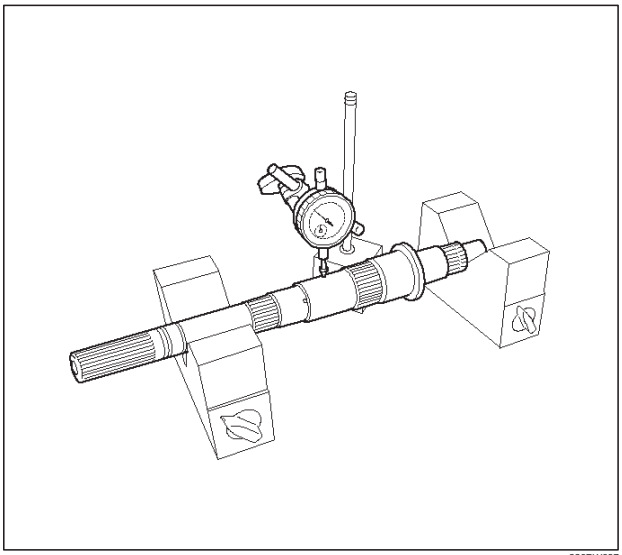

226RW097

Downloaded from www.Manualslib.com manuals search engine

8. Install 3rd gear.
   1. Install the 3rd gear needle bearing, 3rd gear and 3rd block ring to the mainshaft.

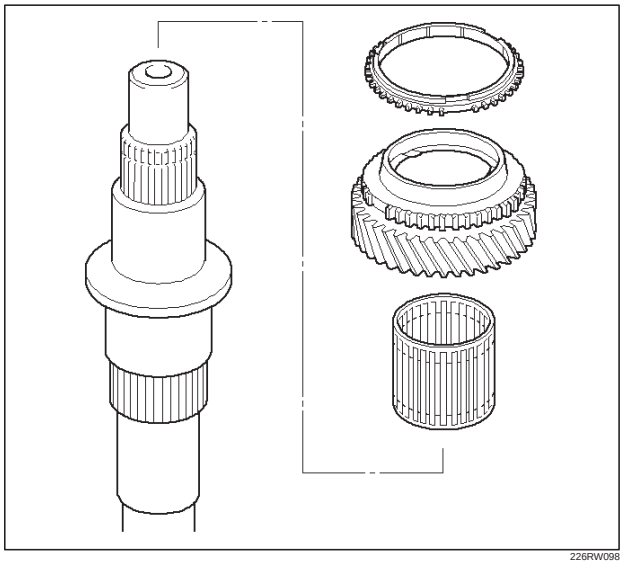

226RW098

9. Install the clutch hub No.2.
   1. Install the clutch hub No.2 and hub sleeve No.2.

NOTE: Be careful the direction of the clutch hub No.2, as shown.

   2. Using a screwdriver, install 3 inserts and 2 springs.

NOTE: Position the insert springs so that their end gaps are not in line.

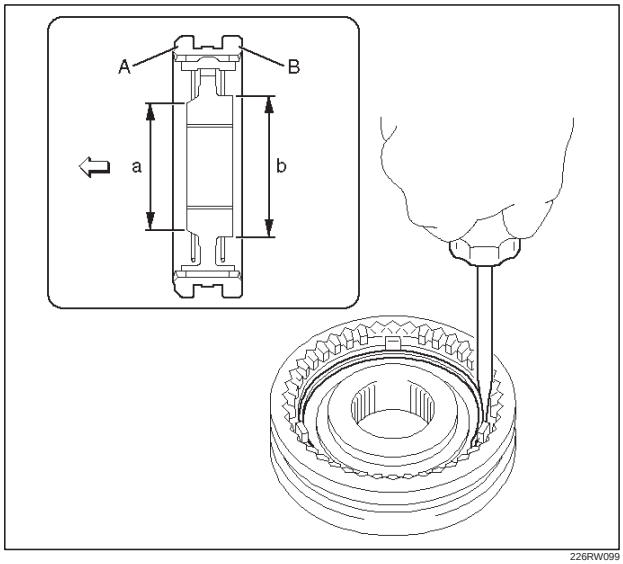

226RW099

   3. Using installer J–42797 and a press, install the clutch hub No.2 and hub sleeve No.2 to the mainshaft.

NOTE:

- Align the block ring slots with the inserts.
- Check that the gear rotates smoothly.

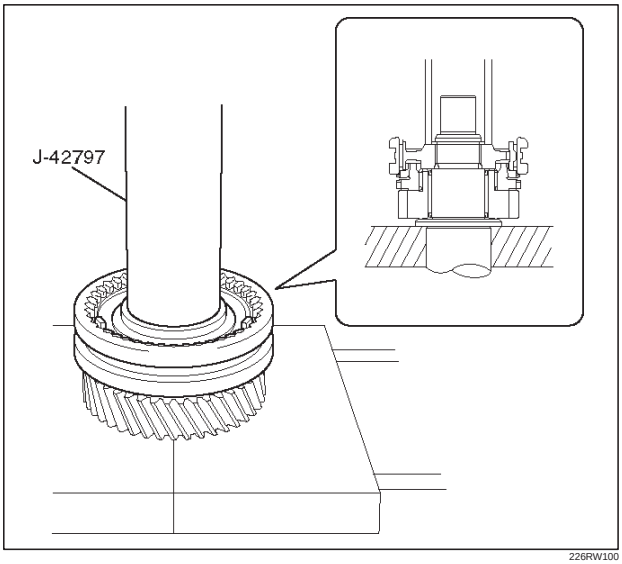

226RW100

   4. Select a snap ring that will allow minimum axial play.

Mark	Thickness
A	1.80 – 1.85 mm (0.071 – 0.073 in)
B	1.85 – 1.90 mm (0.073 – 0.075 in)
C	1.90 – 1.95 mm (0.075 – 0.077 in)
D	1.95 – 2.00 mm (0.077 – 0.079 in)
E	2.00 – 2.05 mm (0.079 – 0.081 in)
F	2.05 – 2.10 mm (0.081 – 0.083 in)
G	2.10 – 2.15 mm (0.083 – 0.085 in)

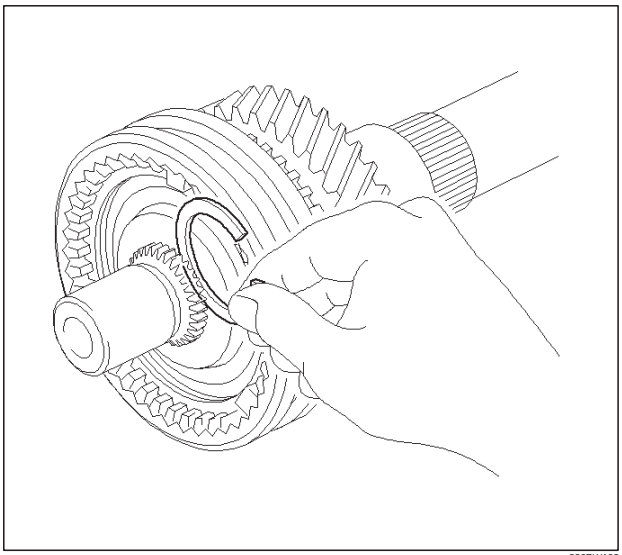

226RW102

Downloaded from www.Manualslib.com manuals search engine

5. Using a snap ring expander, install the new snap ring.

NOTE: Be careful not to damage the bearing surface.

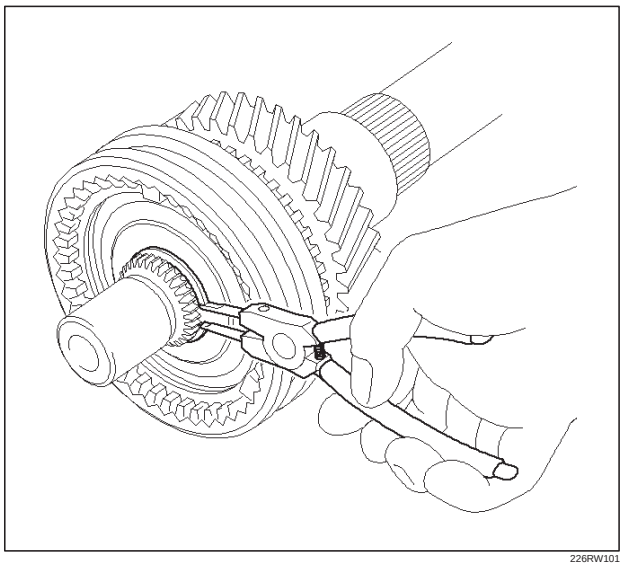

226RW101

6. Using a thickness gauge, inspect the 3rd gear thrust clearance.

Standard: 0.10 – 0.25mm (0.004 – 0.010 in)

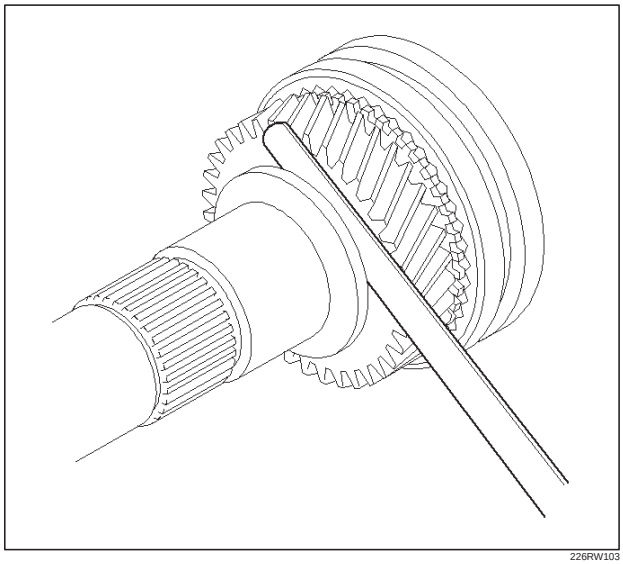

226RW103

10. Install the 2nd gear.
    1. Install the synchronizer ring set NO.1 to the 2nd gear.

NOTE: Align the nail of middle ring with gear spline slots.

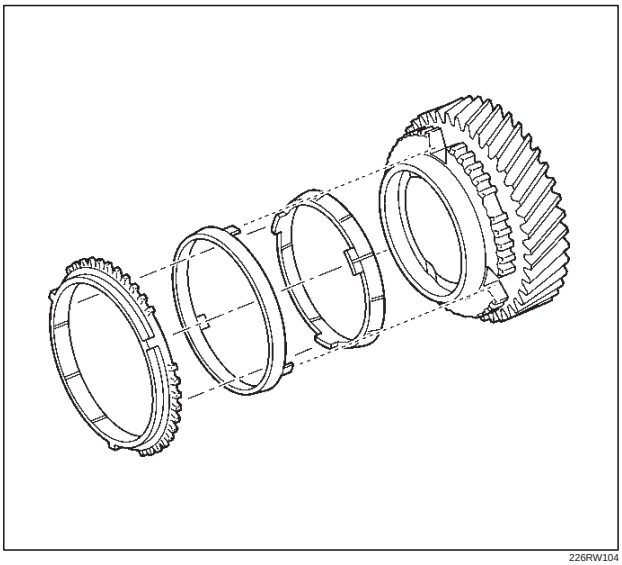

226RW104

2. Install the needle roller bearing, 2nd gear and 2nd gear block ring set to the mainshaft.

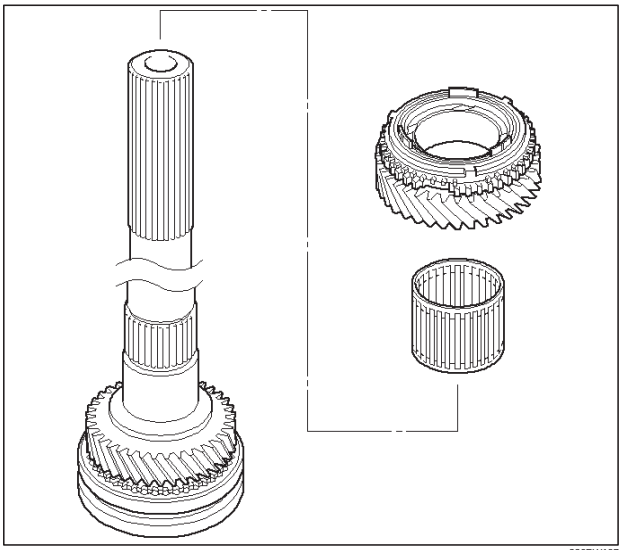

226RW107

Downloaded from www.Manualslib.com manuals search engine

11. Install the clutch hub No.1.
    1. Install the 3 inserts and 3 insert springs to the clutch hub No.1.
       Reference: While pushing the insert spring with a screwdriver, install the inserts.

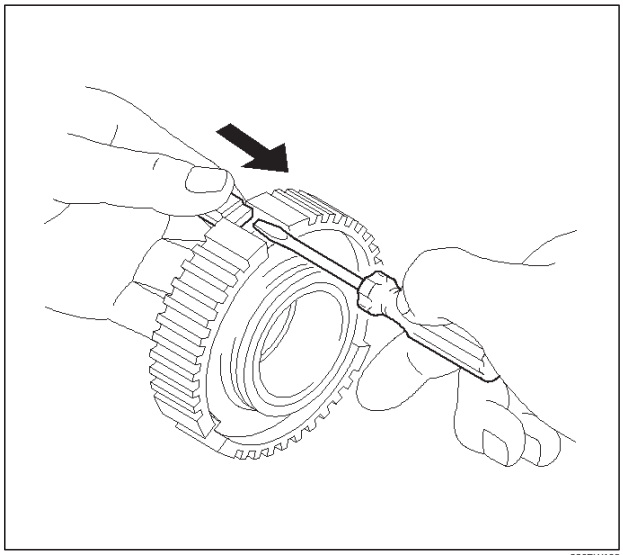

226RW108

    2. Install the clutch hub No.1 to the reverse gear.

NOTE: Check the clutch hub No.1 installing direction, as shown.

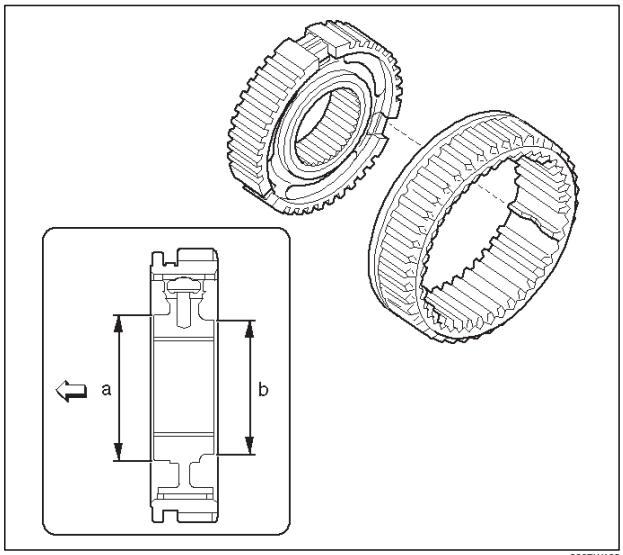

226RW109

    3. Using installer J–42798 and a press, install the hub No.1 by retaining the reverse gear.

NOTE:

- Align the projection of inner ring with hub No.1 slots.
- Check that the gear rotates smoothly.

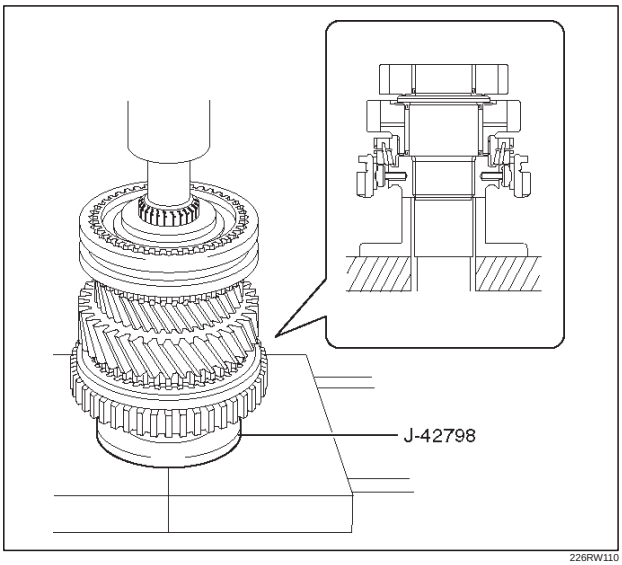

226RW110

    4. Select a snap ring that will allow minimum axial play.

Mark	Thickness
A	2.30 – 2.35 mm (0.091 – 0.093 in)
B	2.35 – 2.40 mm (0.093 – 0.095 in)
C	2.40 – 2.45 mm (0.095 – 0.097 in)
D	2.45 – 2.50 mm (0.097 – 0.098 in)
E	2.50 – 2.55 mm (0.098 – 0.100 in)
F	2.55 – 2.60 mm (0.100 – 0.102 in)
G	2.60 – 2.65 mm (0.102 – 0.104 in)

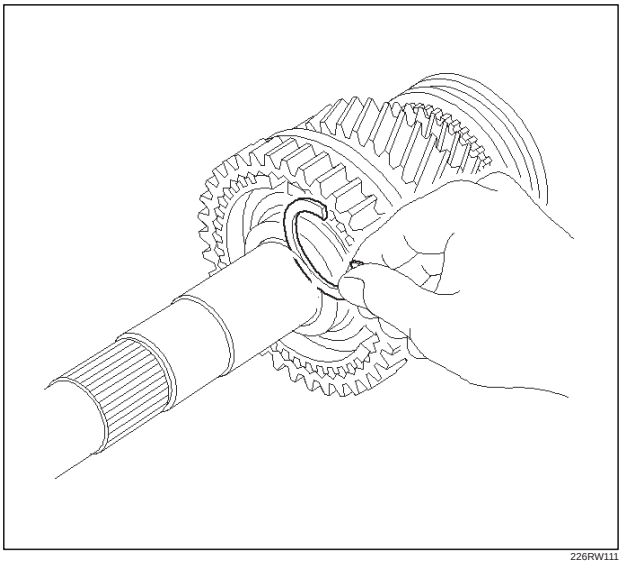

226RW111

Downloaded from www.Manualslib.com manuals search engine

5. Using a screwdriver and hammer, install the snap ring.

NOTE: Be careful not to damage the bearing surface.

6. Check that the gear rotates smoothly.

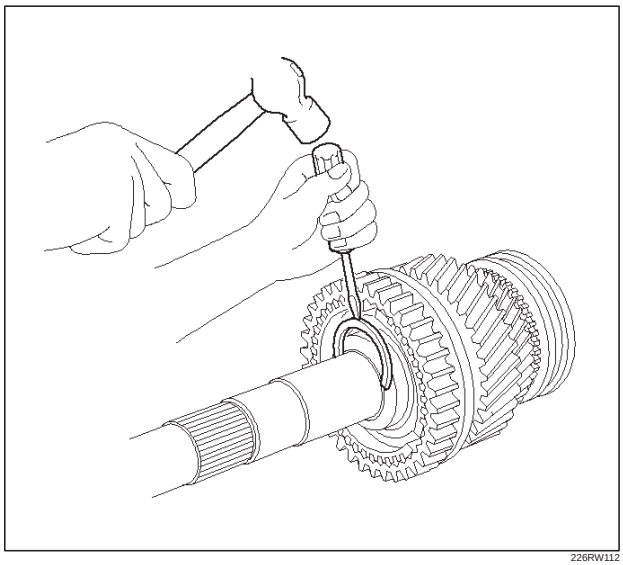

226RW112

7. Using a dial indicator, measure the 2nd gear thrust clearance.

Standard: 0.10 – 0.25mm (0.004 – 0.010 in)

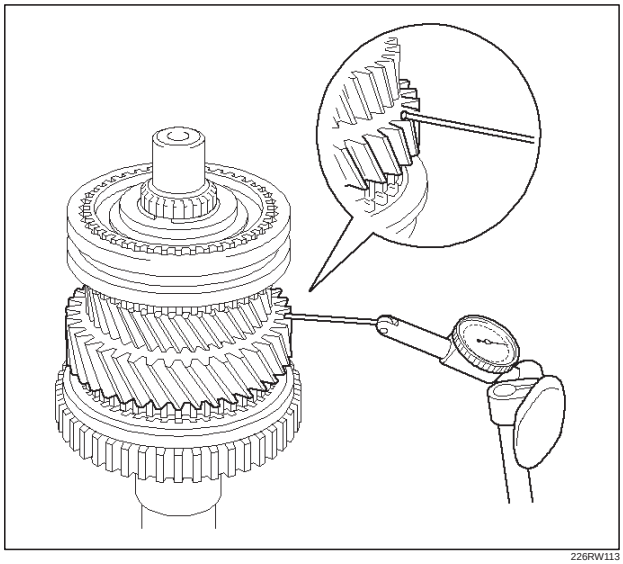

226RW113

12. Install the 1st gear.

1. Install the following parts:
   1. 1st gear bearing spacer (4).
   2. 1st gear needle roller bearing (3).
   3. Synchronizer assembly (2).
   4. 1st gear (1).

NOTE:

- Align the projection of inner ring with hub No.1 slots.
- Check that the gear rotates smoothly.

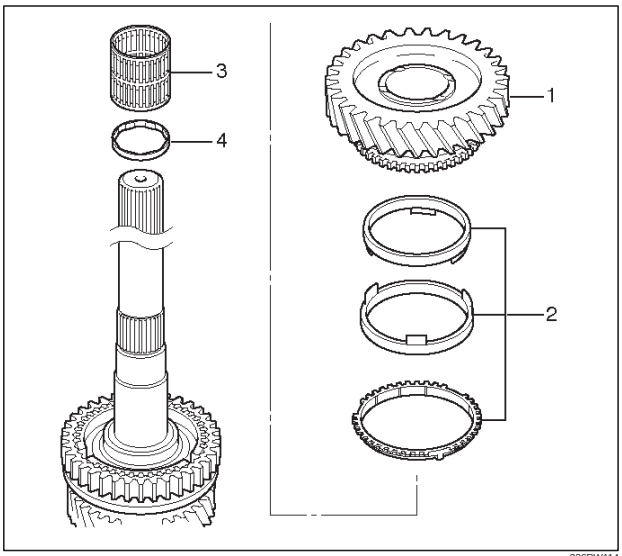

226RW114

2. Install the 1st gear thrust washer pin and 1st gear thrust washer to the mainshaft.

NOTE: Align the straight pin with the thrust washer slot.

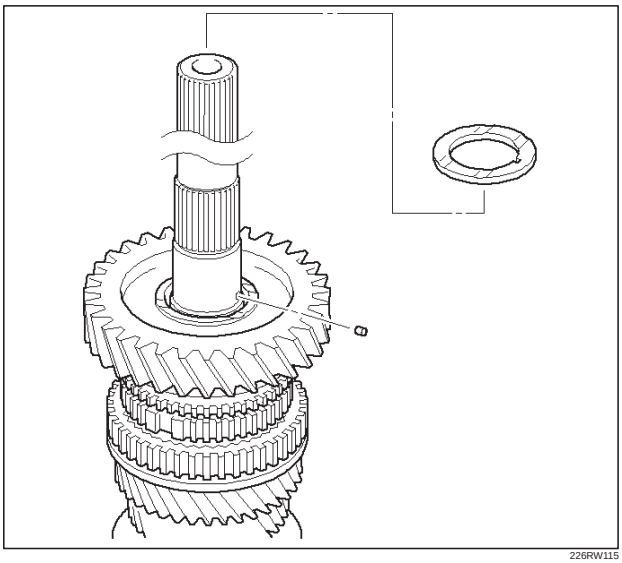

226RW115

Downloaded from www.Manualslib.com manuals search engine

13. Install the mainshaft center bearing.
    1. Using installer J–42799 and a press, install the mainshaft center bearing.

NOTE: Center bearing snap ring groove toward rear.

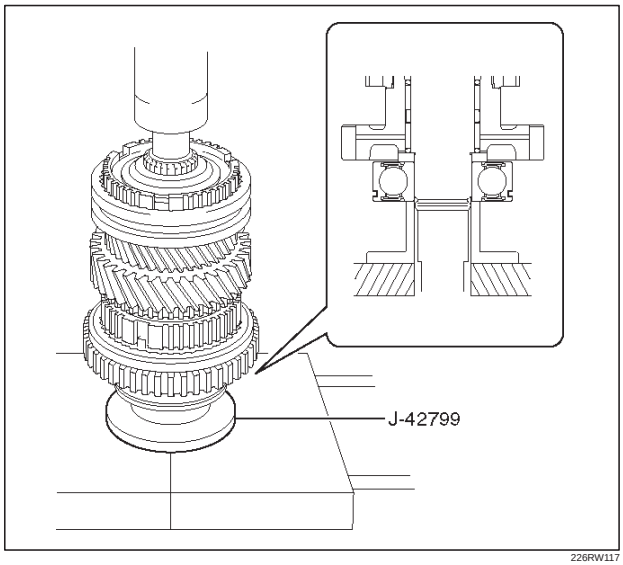

226RW117

    2. Using a thickness gauge, measure 1st gear thrust clearance.

Standard: 0.10 – 0.45mm (0.004 – 0.018 in)

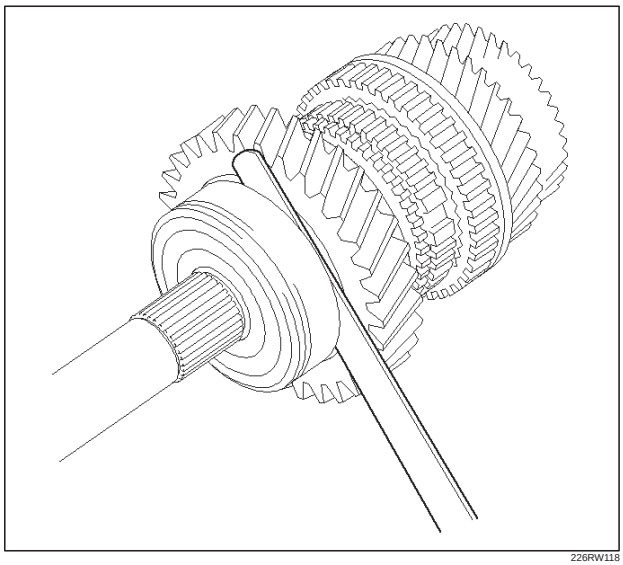

226RW118

14. Install the 5th gear.
    1. Using installer J–42799 and a press, install the 5th gear.
    2. Select a snap ring that will allow minimum axial play.

Mark	Thickness
C	2.75 – 2.80 mm (0.108 – 0.110 in)
D	2.80 – 2.85 mm (0.110 – 0.112 in)
E	2.85 – 2.90 mm (0.112 – 0.114 in)
F	2.90 – 2.95 mm (0.114 – 0.116 in)
G	2.95 – 3.00 mm (0.116 – 0.118 in)
H	3.00 – 3.05 mm (0.118 – 0.120 in)
J	3.05 – 3.10 mm (0.120 – 0.122 in)
K	3.10 – 3.15 mm (0.122 – 0.124 in)
L	3.15 – 3.20 mm (0.124 – 0.126 in)
M	3.20 – 3.25 mm (0.126 – 0.128 in)
N	3.25 – 3.30 mm (0.128 – 0.130 in)
P	3.30 – 3.35 mm (0.130 – 0.132 in)

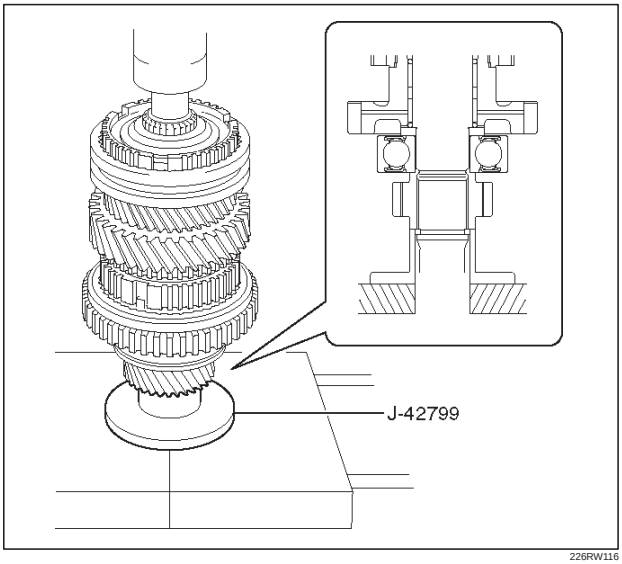

226RW116

    3. Using a screwdriver and hammer, install the new snap ring.

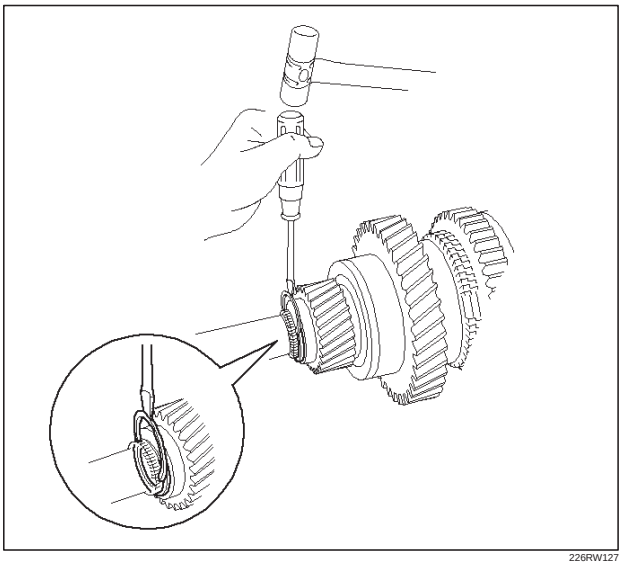

226RW127

Downloaded from www.Manualslib.com manuals search engine

15. Inspect each gear radial clearance.
    1. Mount the mainshaft through the aluminum plate in a vise.
    2. Using a dial indicator, measure the radial clearance of each gear.

Gear	Standard Clearanse
1st	0.020 – 0.073 mm (0.0008 – 0.0029 in)
2nd	0.015 – 0.068 mm (0.0006 – 0.0027 in)
3rd	0.015 – 0.068 mm (0.0006 – 0.0027 in)

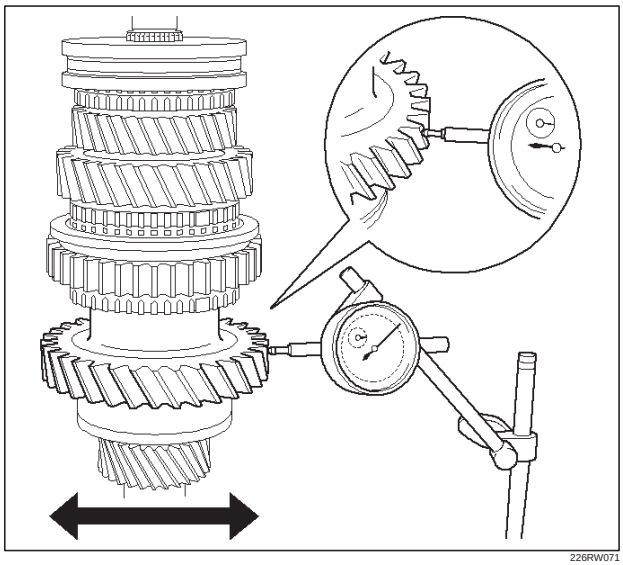
226RW071

16. Install the counter gear shaft.
    1. Check the new counter front bearing inner race and the side race, as shown.
    2. Using installer J–42800 and a press, install the counter gear shaft front bearing.

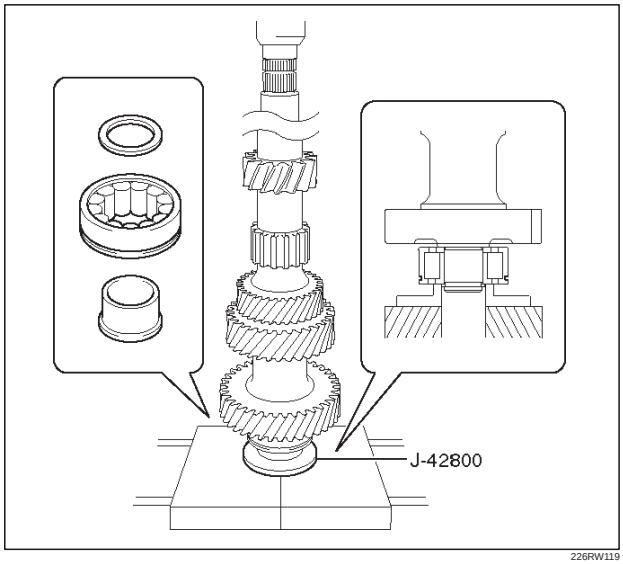

226RW119

    3. Select a snap ring that will allow minimum axial play.

Mark	Thickness
A	2.00 – 2.05 mm (0.079 – 0.081 in)
B	2.05 – 2.10 mm (0.081 – 0.083 in)
C	2.10 – 2.15 mm (0.083 – 0.085 in)
D	2.15 – 2.20 mm (0.085 – 0.087 in)
E	2.20 – 2.25 mm (0.087 – 0.089 in)
F	2.25 – 2.30 mm (0.089 – 0.091 in)

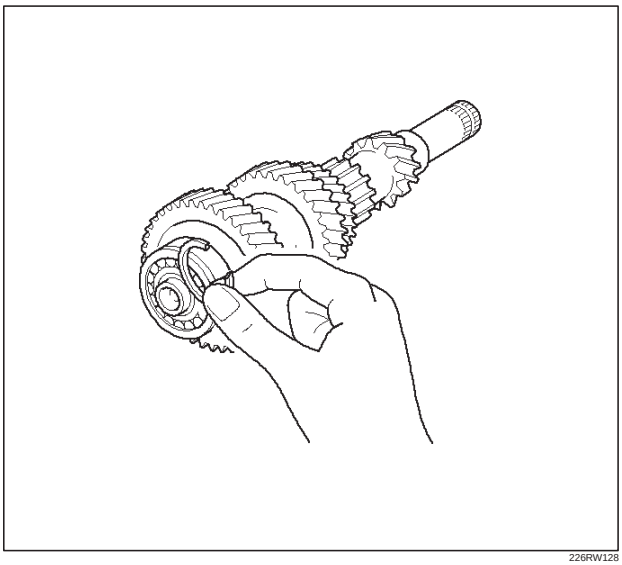
226RW128

    4. Using a snap ring expander, install the new snap ring.

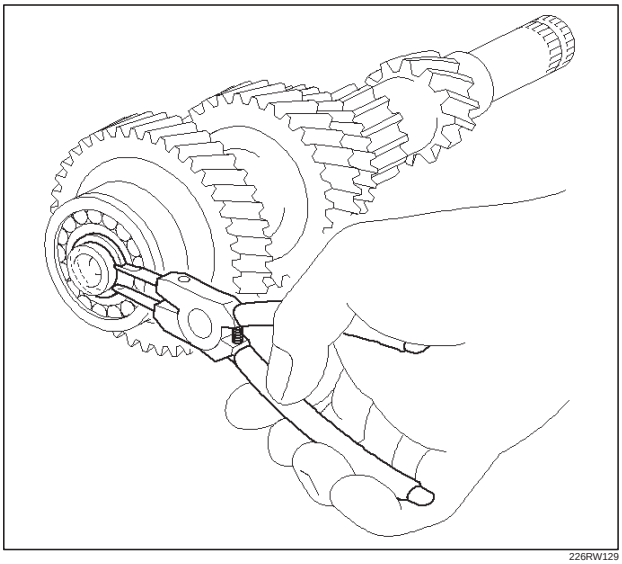
226RW129

Downloaded from www.Manualslib.com manuals search engine

17. Install the front cover.
    1. Using installer J–42801, grip J–8092 and a hammer, drive in a new oil seal.

    Drive in depth (from cover end): 11.7 ± 0.5 mm (0.46 ± 0.02 in)

    2. Apply grease to the seal lip.

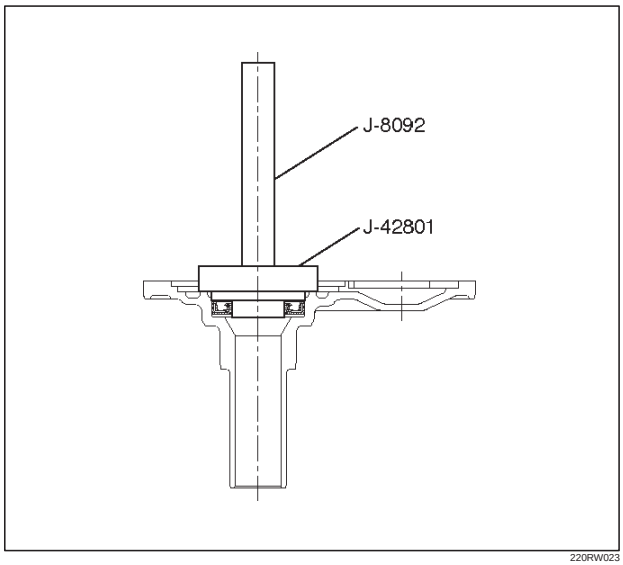

220RW023

18. Install the transfer adapter.
    1. Using installer J –42802, and a hammer drive in a new oil seal.

    Drive in depth (from transfer adapter): 10.95 ± 0.5 mm (0.431 ± 0.02 in)

    2. Apply grease to the oil seal lip.

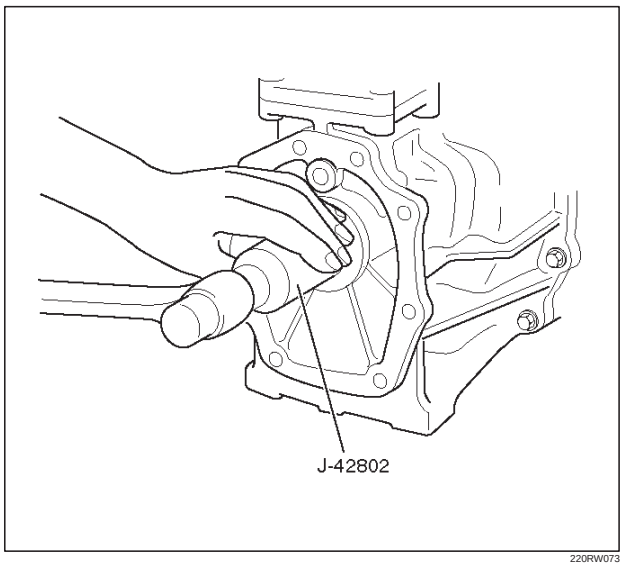

220RW073

    3. Install the oil receiver pipe.

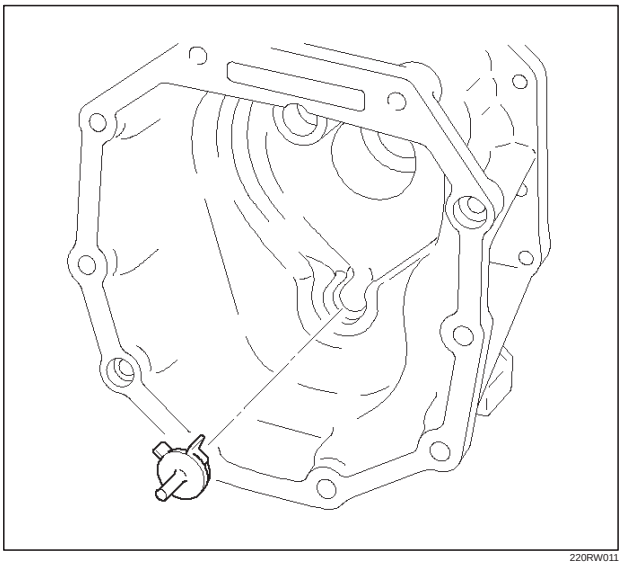

220RW011

    4. Install the reverse restrict to the transfer adapter.

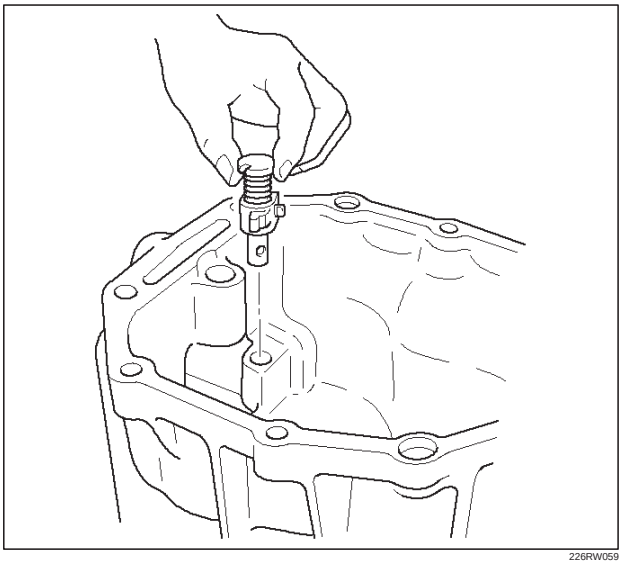

226RW059

Downloaded from www.Manualslib.com manuals search engine

5. Using a pin punch and hammer, drive in the slotted spring pin.

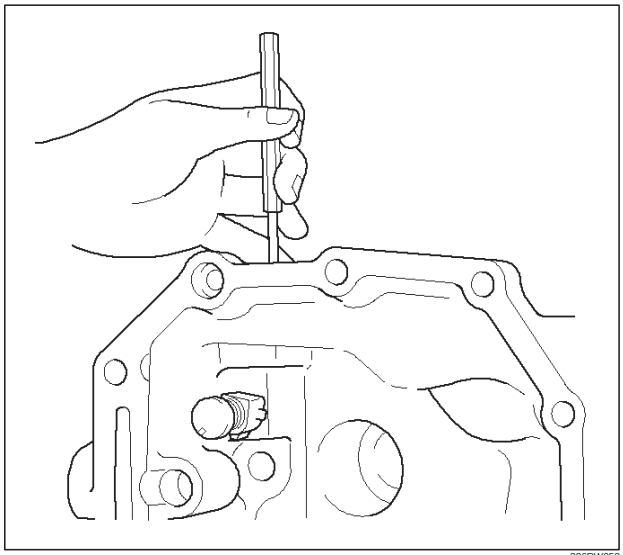

226RW058

6. Clean up the plug and plug hole.
7. Apply sealant to the plug threads. (THREE BOND 1344 or equivalent)
8. Using a torx socket wrench(T40), install and torque the plug.

Torque: 18.5 N·m (13.5 lb ft)

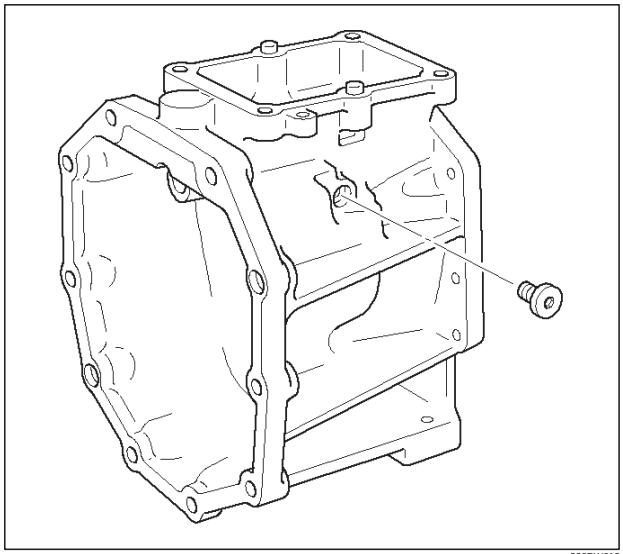

220RW013

9. Using hexagon wrench, install and torque the plug.

Torque: 37 N·m (27 lb ft)

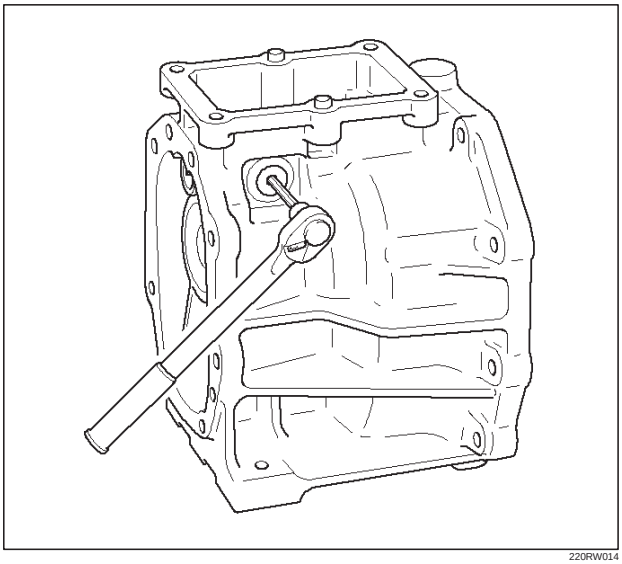

220RW014

19. Install the reverse shift arm No.1 and reverse shift arm No.2.
    1. Mount the intermediate plate through the aluminum plate in a vise.

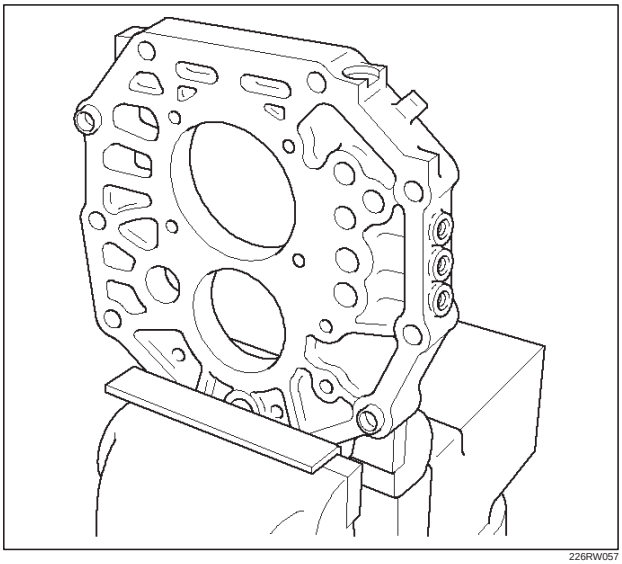

226RW057

Downloaded from www.Manualslib.com manuals search engine

2. Using 2 bolts, install reverse shift arm bracket.

Torque: 18 N·m (13 lb ft)

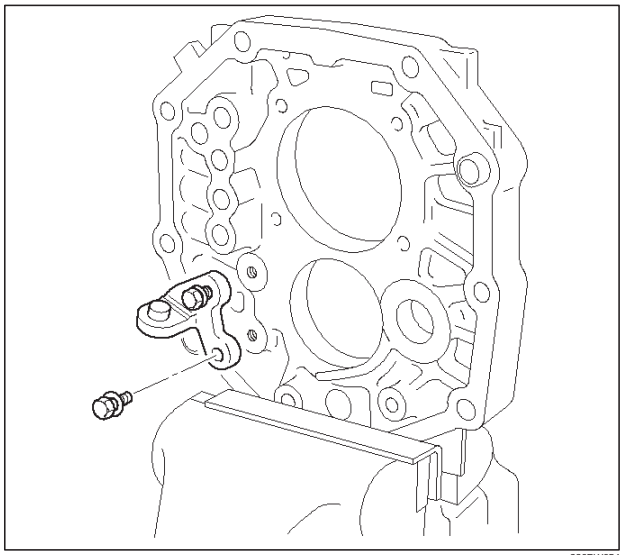

226RW054

3. Install reverse shift arm No.2 to the reverse shift arm No.1. Using screwdriver and a hammer, install the new E-ring.

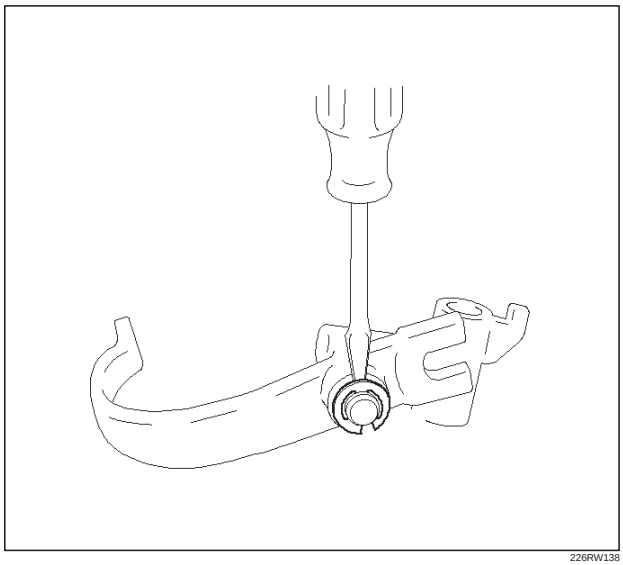

226RW138

4. Install reverse shift arm No.2 to the reverse shift arm bracket.

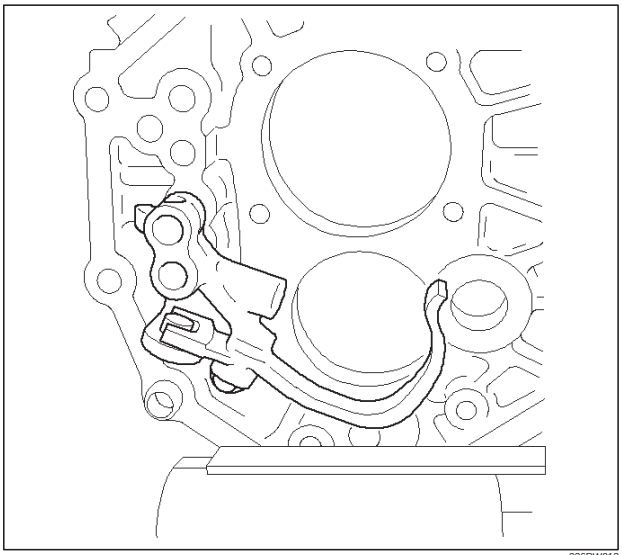

226RW012

20. Install the reverse shift rod.
    1. Install the reverse shift arm No.1 compression spring and ball to the reverse shift arm No.1.

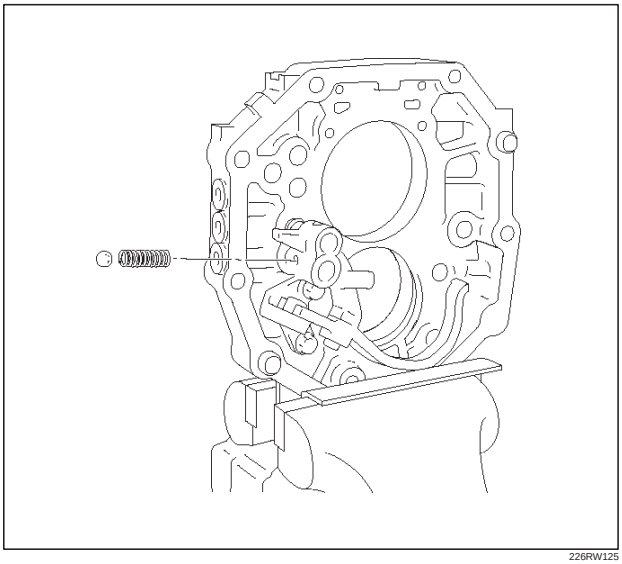

226RW125

Downloaded from www.Manualslib.com manuals search engine

2. Install the reverse shift rod from the rear side by pushing the ball on using a screwdriver.

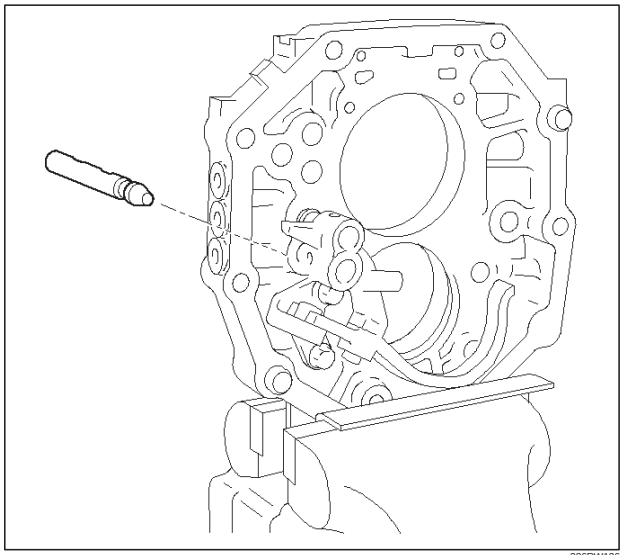

226RW126

21. Install the reverse-5th shift rod.
    1. Install the reverse shift arm No.1 lock ball to the reverse shift arm No.1.
    2. Install the interlock pin to the intermediate plate.

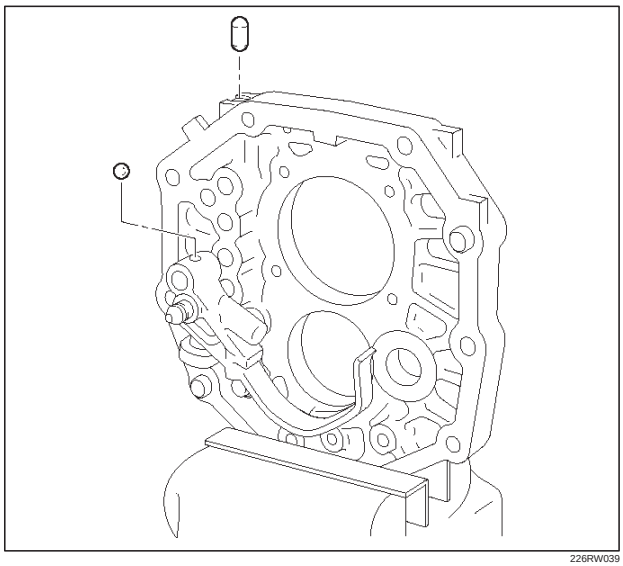

226RW039

3. Put in the reverse-5th shift rod from the front.

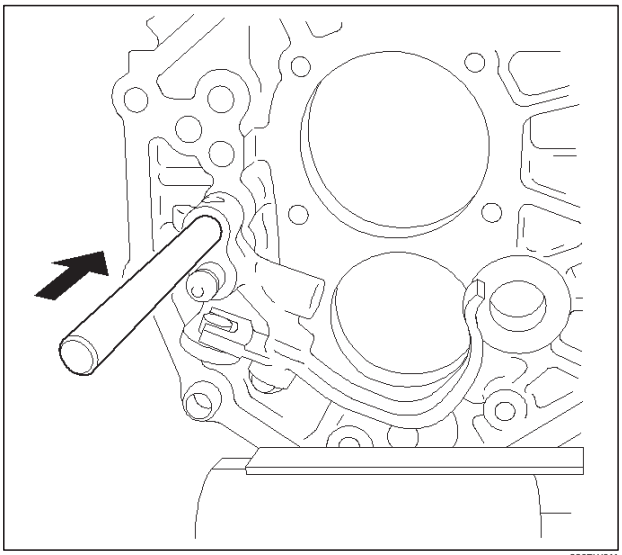

226RW011

4. Using a screwdriver and a hammer, install the 2 new shift rod snap rings to the 5th-reverse shift rod and reverse shift rod.

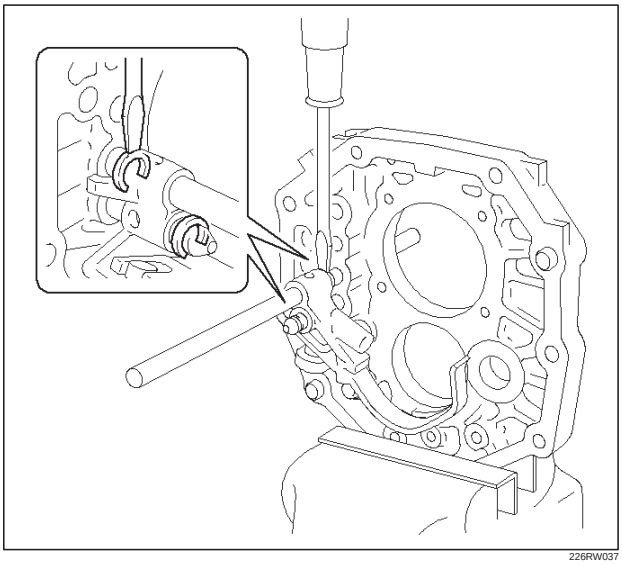

226RW037

Downloaded from www.Manualslib.com manuals search engine

22. Install 1st–2nd shift rod.
    1. Install the interlock pin to the intermediate plate.

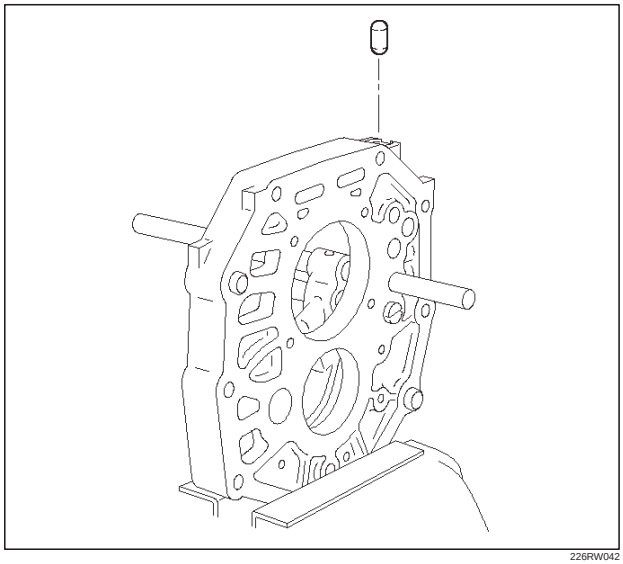

226RW042

    2. Put in the 1st–2nd shift rod from the rear.

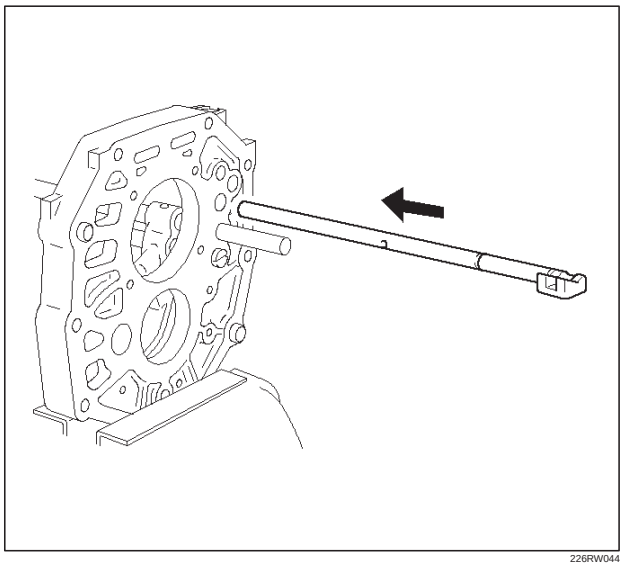

226RW044

23. Install 3rd–4th shift rod.
    1. Install the straight pin and interlock pin to the intermediate plate.

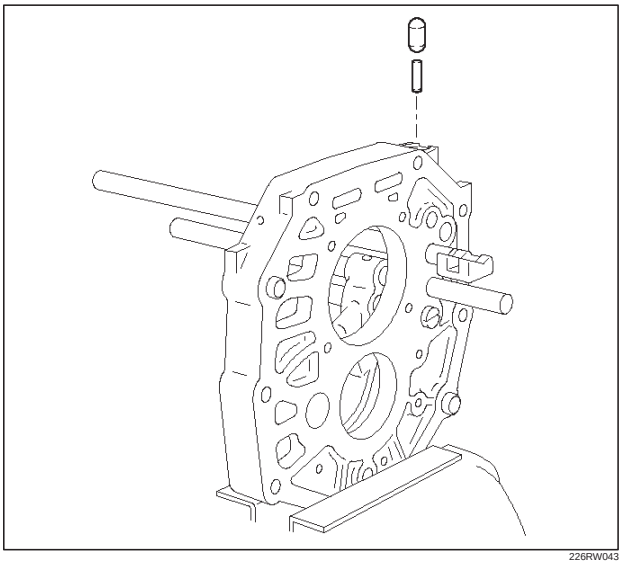

226RW043

    2. Put in the 3rd–4th shift rod from the rear.

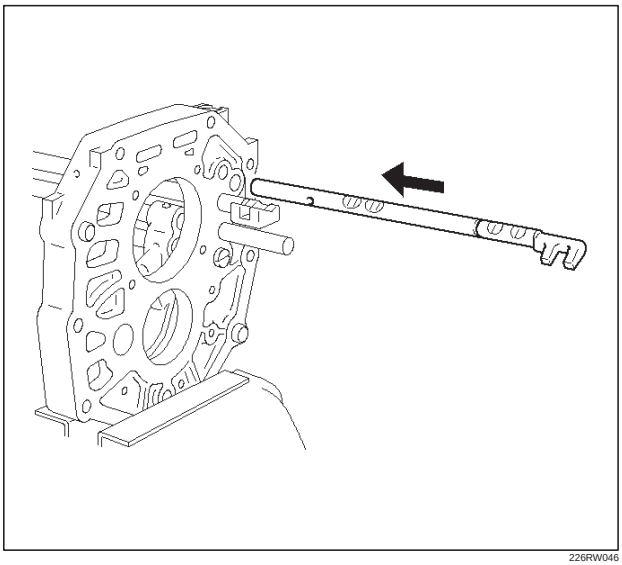

226RW046

Downloaded from www.Manualslib.com manuals search engine

24. Install the interlock parts.
    1. Using a screwdriver and hammer, 2 new shift rod snap rings to the 1st–2nd and 3rd–4th shift rod.

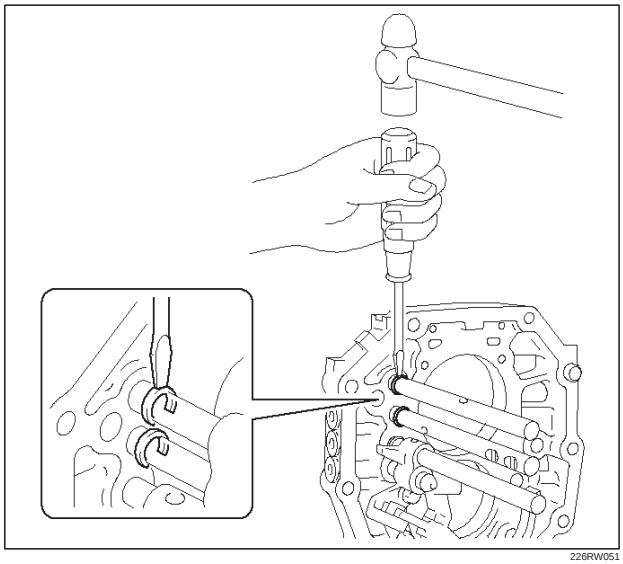

226RW051

    2. Install the 3 shift detent ball and springs to the intermediate plate.

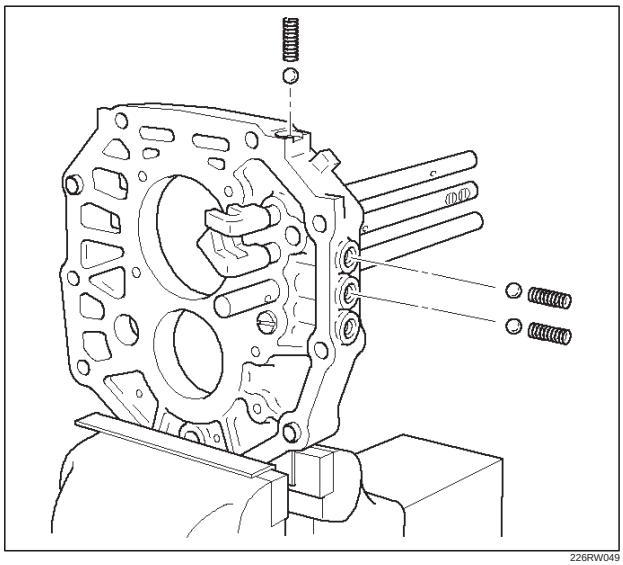

226RW049

    3. Clean up the plug hole.
    4. Apply sealant to the plug threads.
       sealant: three bond 1344 or equivalent
    5. Using a torx socket wrench(T40) install and torque the 4 plugs.

Torque: 18.5 N·m (13.5 lb ft)

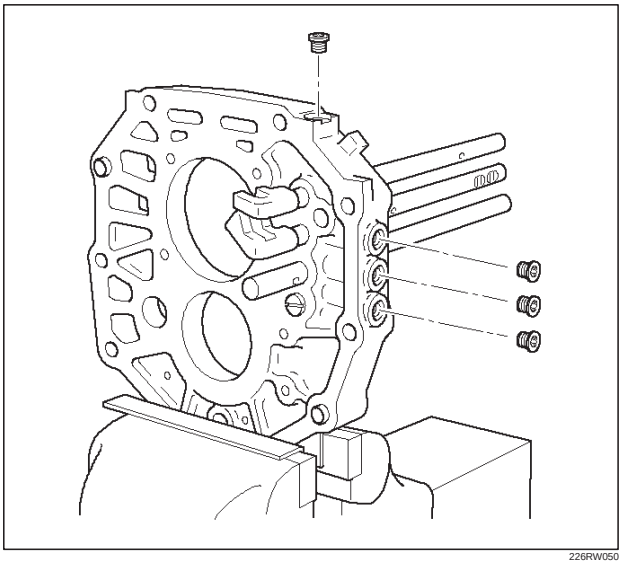

226RW050

25. Install mainshaft assembly.

NOTE: Coat all parts with gear oil before installing them.

    1. Using a plastic hammer, tap the 5th-reverse shift rod at the reverse shift.

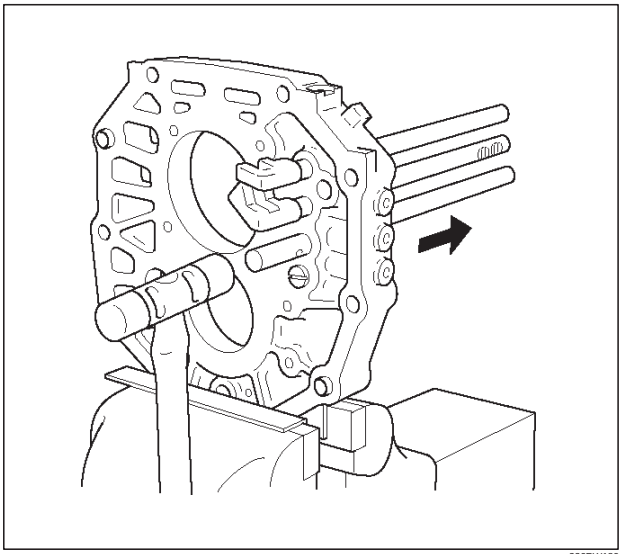

226RW180

Downloaded from www.Manualslib.com manuals search engine

2. Install the shift arm No.1 and No.2 to the mainshaft.

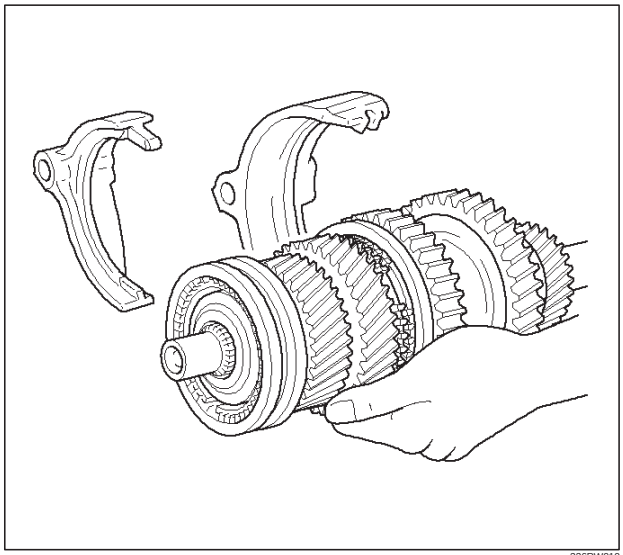

226RW010

3. Using a plastic hammer, tap the intermediate plate and install the mainshaft. Through the shift arm No.1 and No.2 to the shift rod.

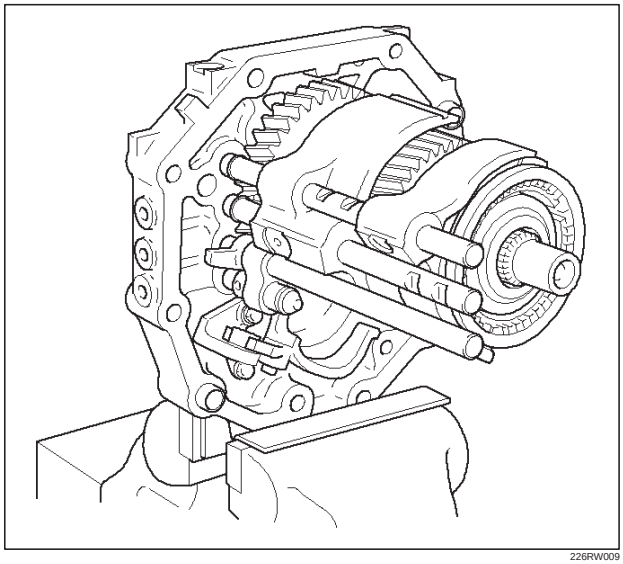

226RW009

4. Using a snap ring expander, install the snap ring.

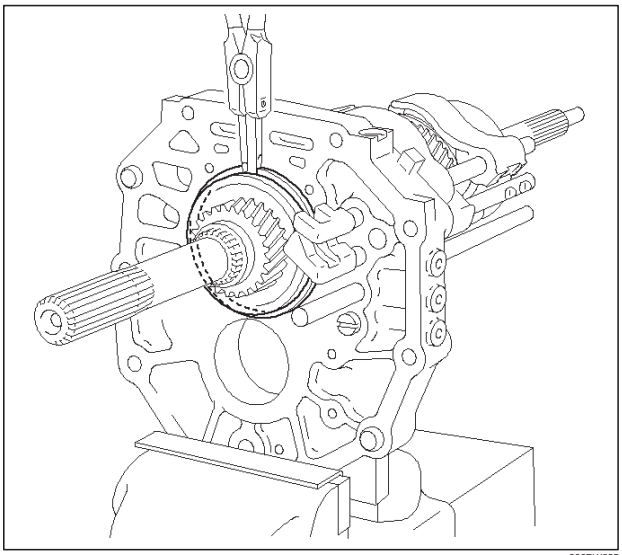

226RW035

5. Using a plastic hammer, tap the 5th-reverse shift rod at the neutral shift.

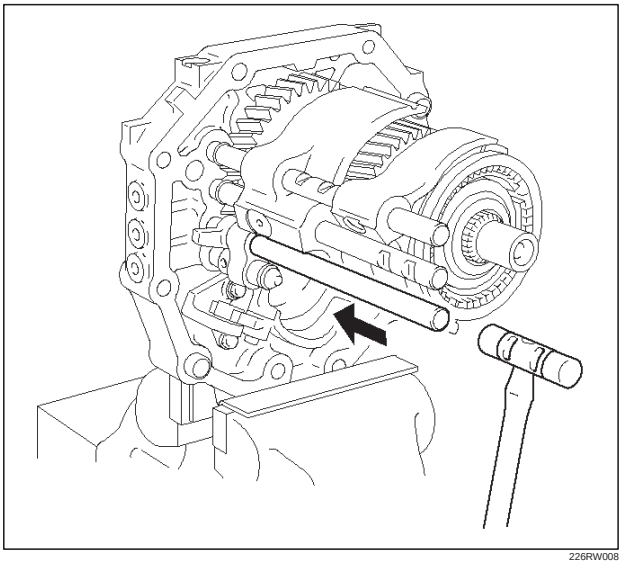

226RW008

Downloaded from www.Manualslib.com manuals search engine

26. Install the top gear shaft.
    1. Align the projection of the hub No.2 with the synchronizer ring slots, and install the top gear shaft assembly to the mainshaft.
    2. Check that the gear rotates smoothly.

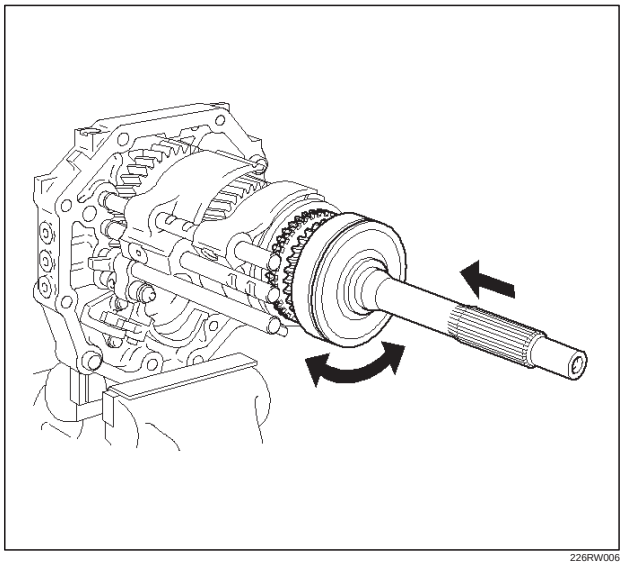

226RW006

27. Install the counter gear shaft.
    1. Temporarily install the counter gear shaft to the intermediate plate.

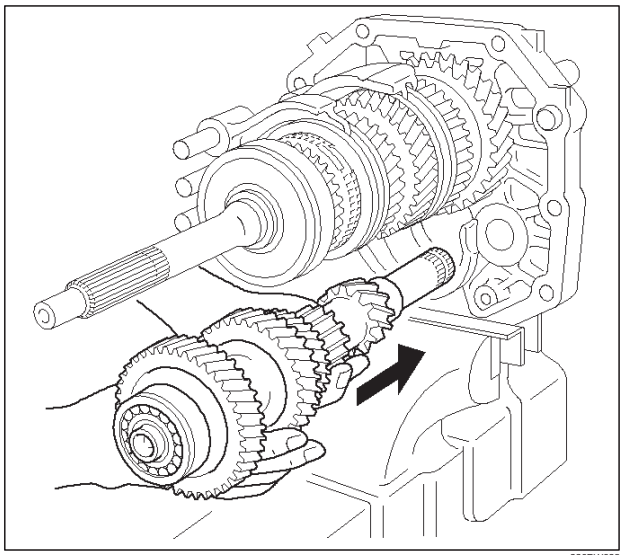

226RW028

    2. Using installer J–42796 and a hammer, drive in the center bearing as shown.

NOTE: Outer race snap ring groove toward rear.

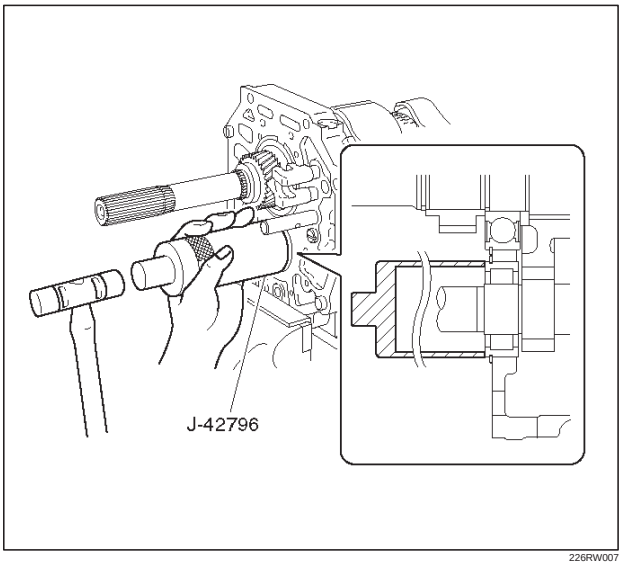

226RW007

Reference: Drive in the counter rear bearing by tapping on the front end of the counter shaft.

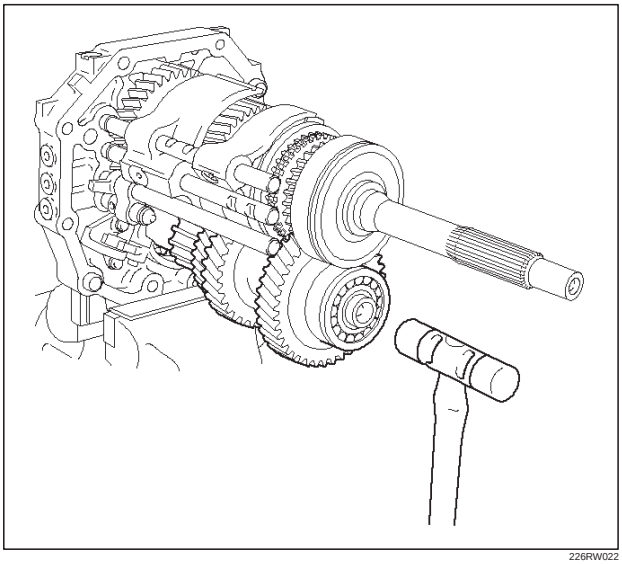

226RW022

Downloaded from www.Manualslib.com manuals search engine

28. Install the reverse idle gear.
    1. Install the reverse idle gear and reverse idle gear shaft.

NOTE:

- Insert the reverse idle gear shaft with the slot toward rear.
- Install the reverse idle gear with the reverse shift arm No.2.

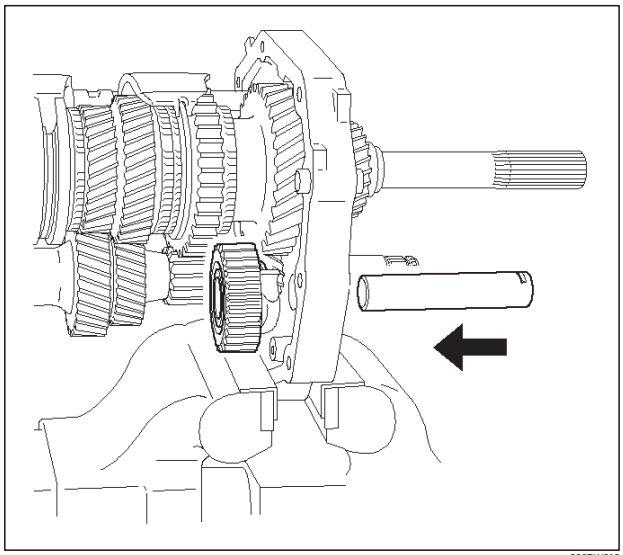

226RW019

29. Install the bearing plate.
    1. Align the bearing plate to groove of the reverse idle gear shaft.

    Torque: 12.5 N·m (109 lb in)

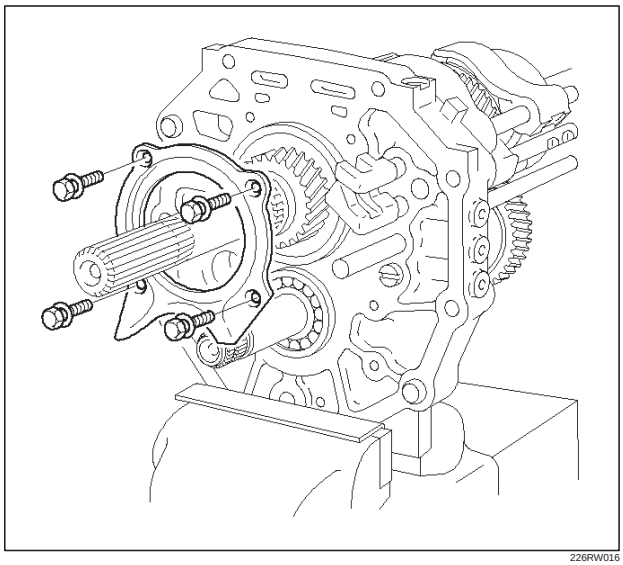

226RW016

30. Install the 5th gear thrust washer.
    1. Install the 5th gear thrust washer pin to the counter gear shaft.
    2. Install the 5th gear thrust washer to the counter gear shaft.

NOTE: Thrust washer must be assembled with the chamfered face of the washer toward the front.

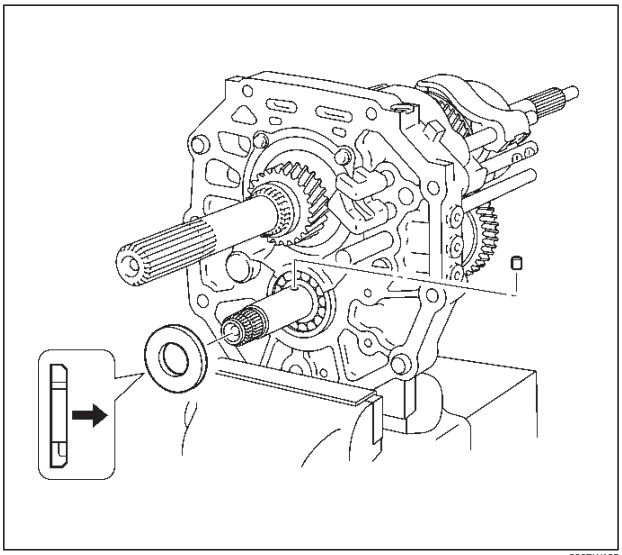

226RW185

31. Install the counter 5th gear.
    1. Install the 3 inserts and 3 compression springs to the reverse block ring.

    Reference: Push the 3 inserts with the 3 compression springs to the reverse synchronizer ring.

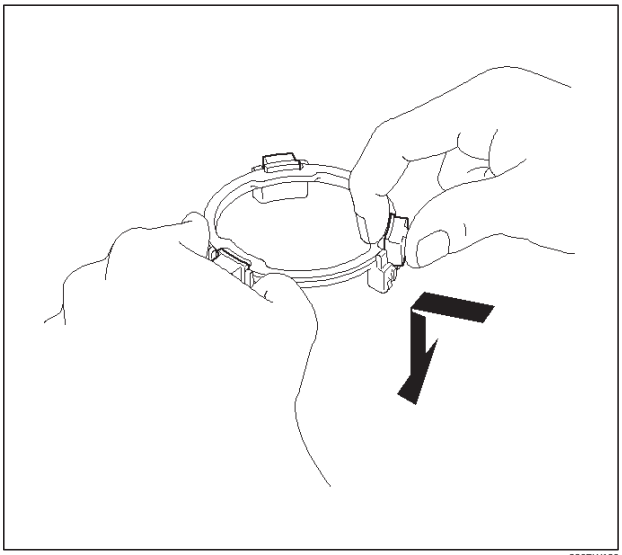

226RW120

Downloaded from www.Manualslib.com manuals search engine

2. Install the synchronizer outer ring, synchronizer cone ring, and synchronizer pull ring to the reverse block ring.

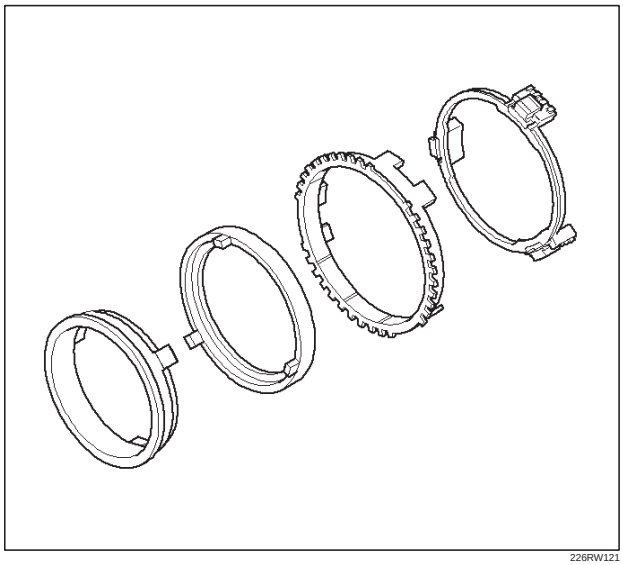

226RW121

3. Turn to 30 degree the reverse synchronizer pull ring.

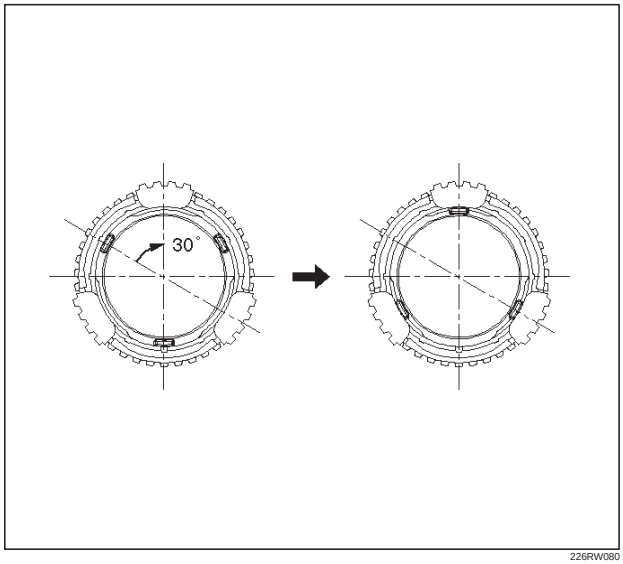

226RW080

4. Install the hub sleeve No.3 and reverse block ring set to the counter 5th gear.

NOTE: Check the hub sleeve No.3 direction, as shown.

Reference: While pushing the 3 inserts, install the synchronizer ring assembly to the hub sleeve No.3.

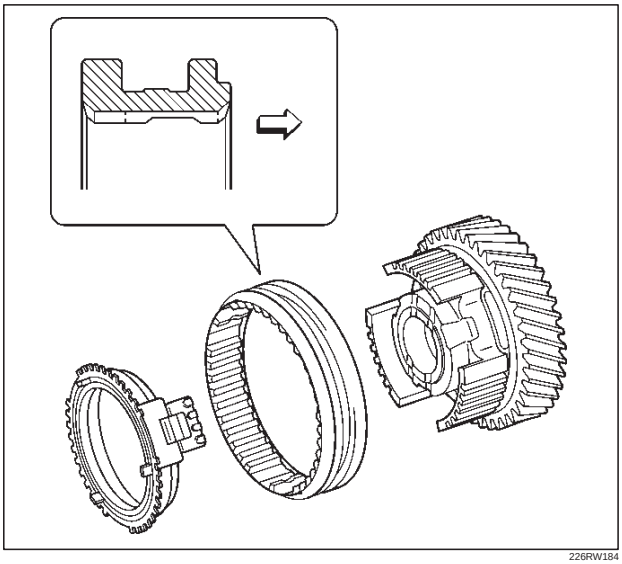

226RW184

5. Slide the hub sleeve No.3.

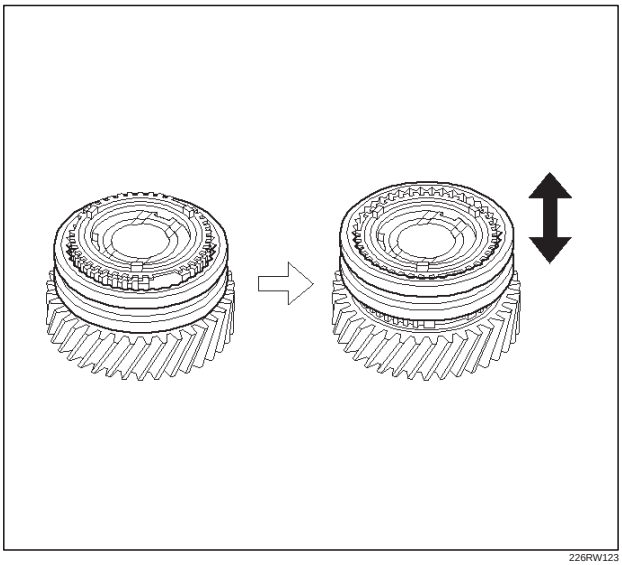

226RW123

Downloaded from www.Manualslib.com manuals search engine

6. Install the counter 5th gear bearing, counter 5th gear and reverse block ring set to the counter gear shaft, through the 5th reverse shift arm to the 5th reverse shift rod.

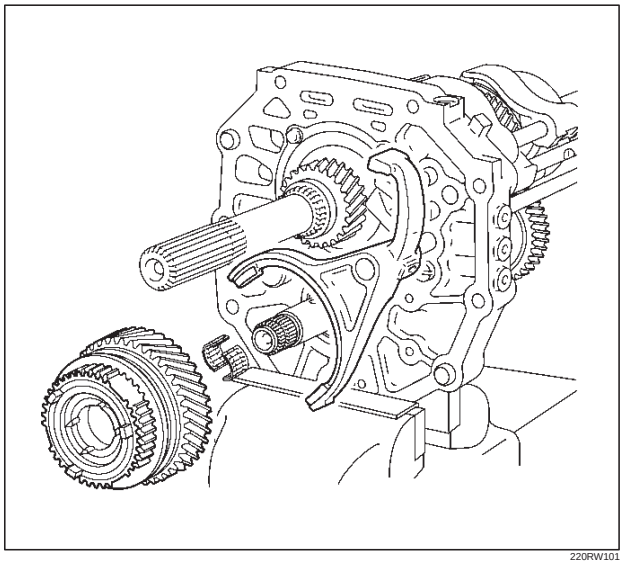

220RW101

7. Using installer J–42796 and a press, install counter 5th gear spline piece.

NOTE:

- Align the projection of the cone ring to the holes of the 5th gear spline piece.
- Check that the gear rotates smoothly.

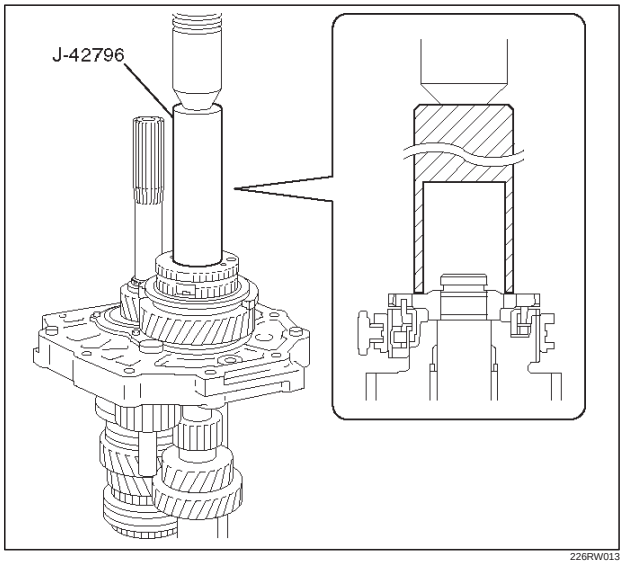

226RW013

8. Using thickness gauge, measure the counter 5th gear thrust clearance.

Standard: 0.10 – 0.35mm (0.004 – 0.014 in)

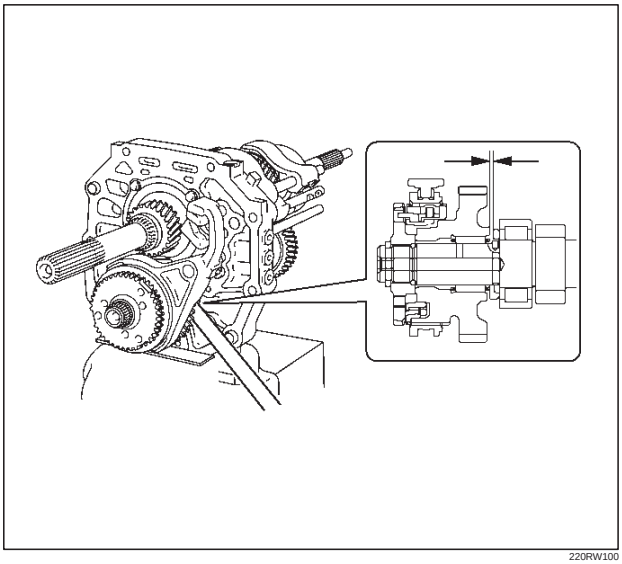

220RW100

9. Select a snap ring that will allow minimum axial play.

Mark	Thickness
A	2.80 – 2.85 (0.110 – 0.112 in)
B	2.85 – 2.90 (0.112 – 0.114 in)
C	2.90 – 2.95 (0.114 – 0.116 in)
D	2.95 – 3.00 (0.116 – 0.118 in)
E	3.00 – 3.05 (0.118 – 0.120 in)
F	3.05 – 3.10 (0.120 – 0.122 in)
G	3.10 – 3.15 (0.122 – 0.124 in)

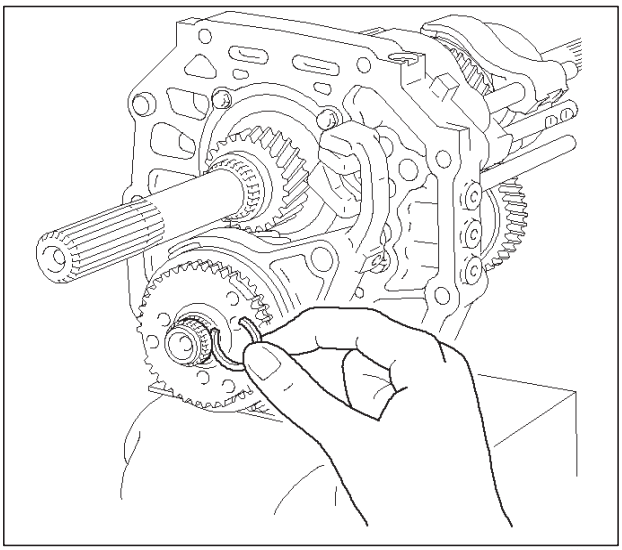

226RW027

Downloaded from www.Manualslib.com manuals search engine

10. Install the new snap ring.

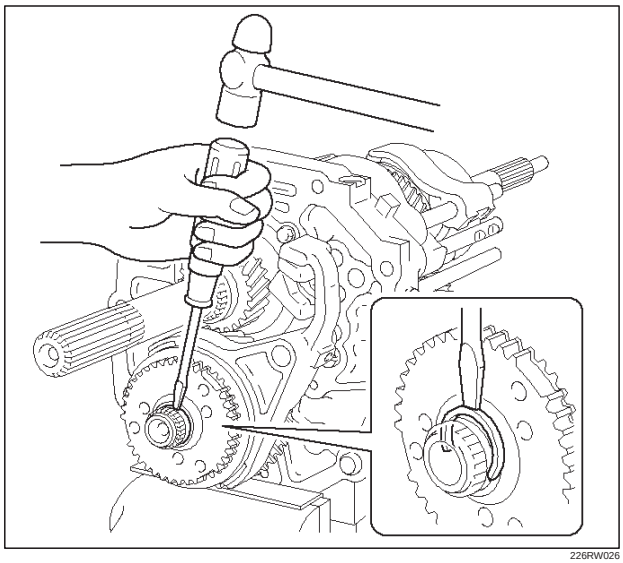

226RW026

32. Install the shift arm bolts.
    1. Install and torque the 2 shift arm bolts.

Torque: 19.5 N·m (14 lb ft)

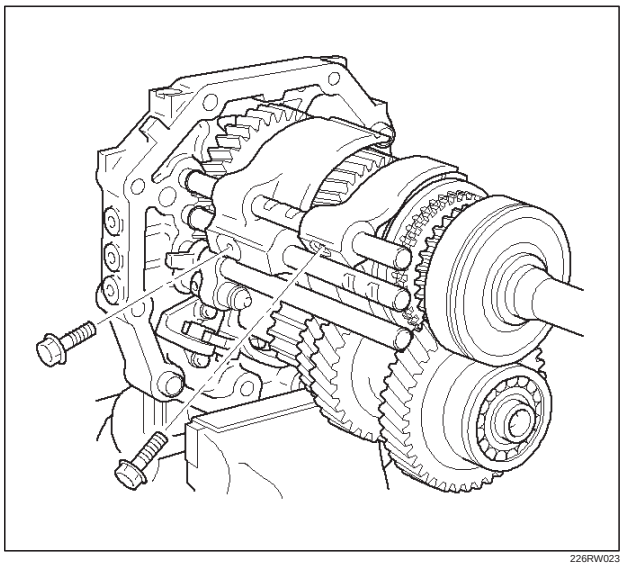

226RW023

33. Install the shift arm slotted pin.
    1. Using a pin punch and a hammer, drive in the slotted pin to the shift arm.

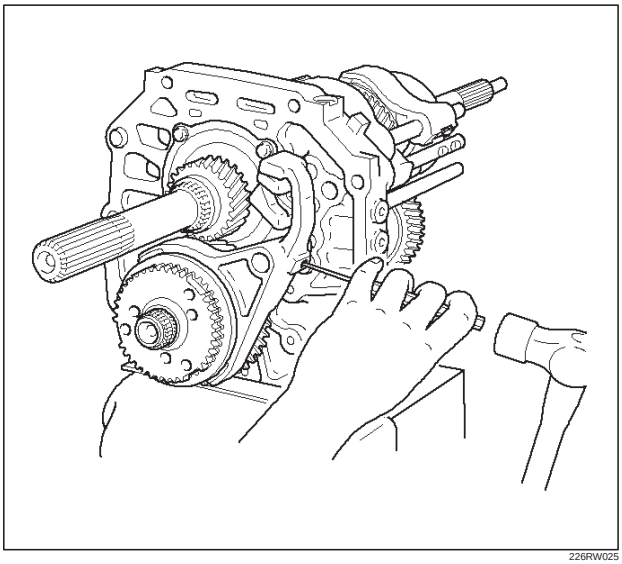

226RW025

34. Install the transmission case.
    1. Clean up the fitting surface.
    2. Apply recommended liquid gasket (THREE BOND 1281 or equivalent), as shown.

NOTE:

- Don’t dry the liquid gasket.

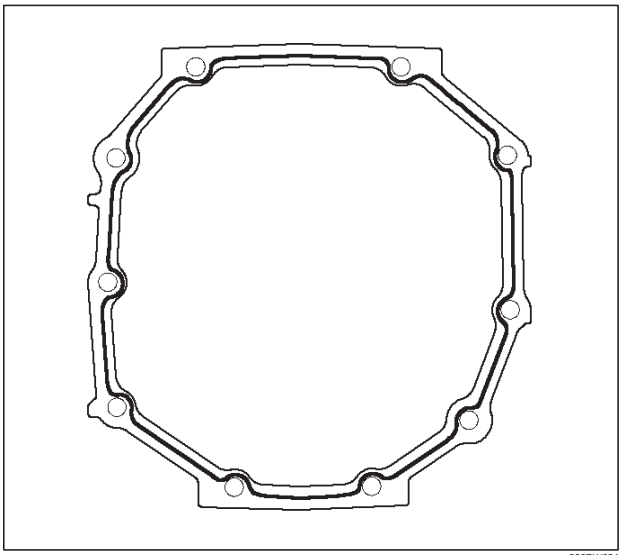

220RW024

Downloaded from www.Manualslib.com manuals search engine

3. Stand the transmission by the wood blocks.
4. Using a plastic hammer, tap the transmission case and attach it to the intermediate plate.

NOTE: Be careful not to add over force to bearing.

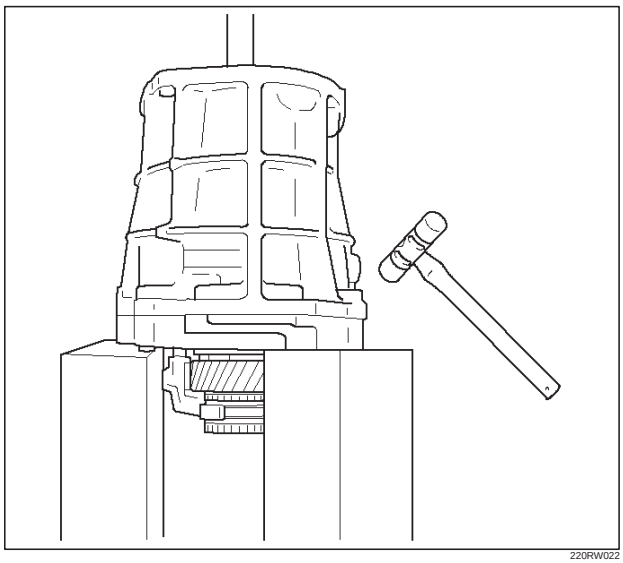

220RW022

5. Using a snap ring expander, install the front bearing shaft snap ring (1) and counter gear shaft bearing snap ring (2).

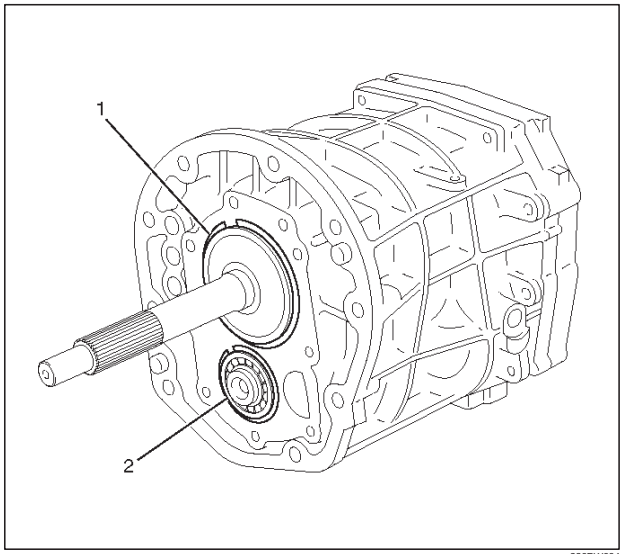

226RW004

6. Turn over the transmission.

35. Install the front cover.
1. Clean up the fitting surface.
2. Apply recommended liquid gasket (THREE BOND 1281 or equivalent), as shown.

NOTE:

- Don't dry the liquid gasket.

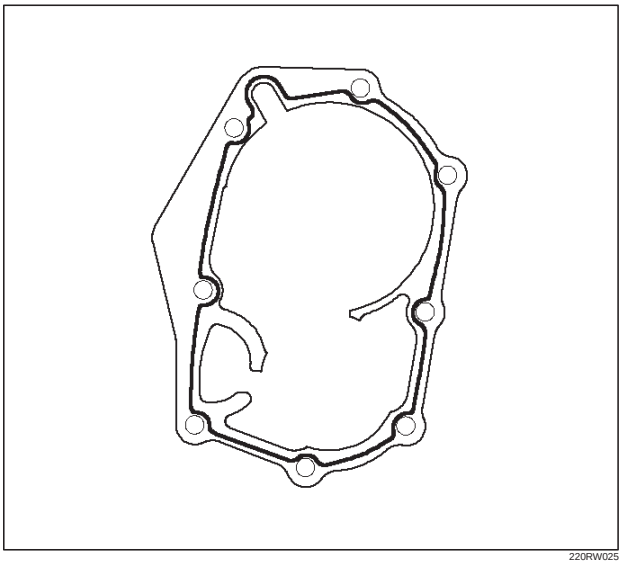

220RW025

3. Clean up and dry the bolts.
4. Apply thread sealant (THREE BOND 1344 or equivalent) to the 8 bolts.
5. Using 8 bolts, install the front cover to the transmission case.

Torque: 16.5 N·m (12 lb ft)

NOTE:

- Tighten the all bolts evenly.
- Be careful not to damage the oil seal.

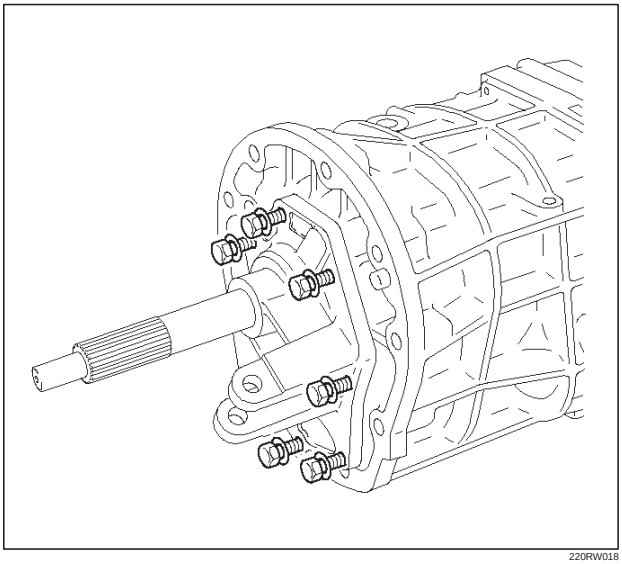

220RW018

Downloaded from www.Manualslib.com manuals search engine

6. Check that the top gear shaft and mainshaft rotate.

36. Install the transfer adapter.
    1. Clean up the fitting surface.
    2. Apply recommended liquid gasket (THREE BOND 1281 or equivalent), as shown.

NOTE:

- Don’t dry the liquid gasket.

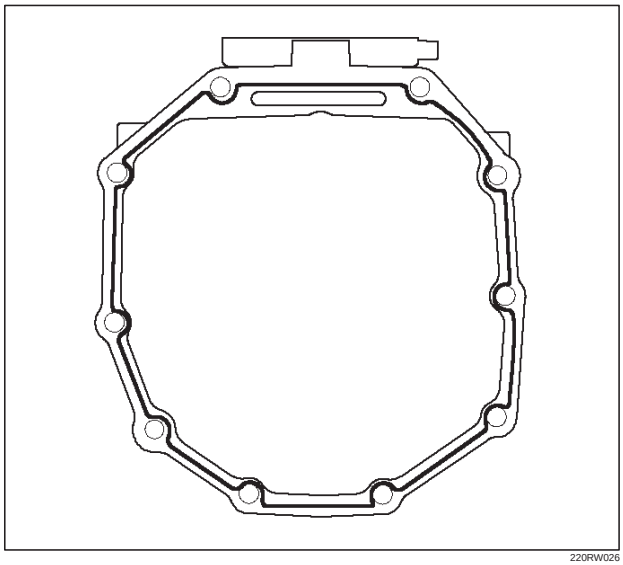

220RW026

3. Using a plastic hammer, tap the transfer adapter and attach it to the intermediate plate.

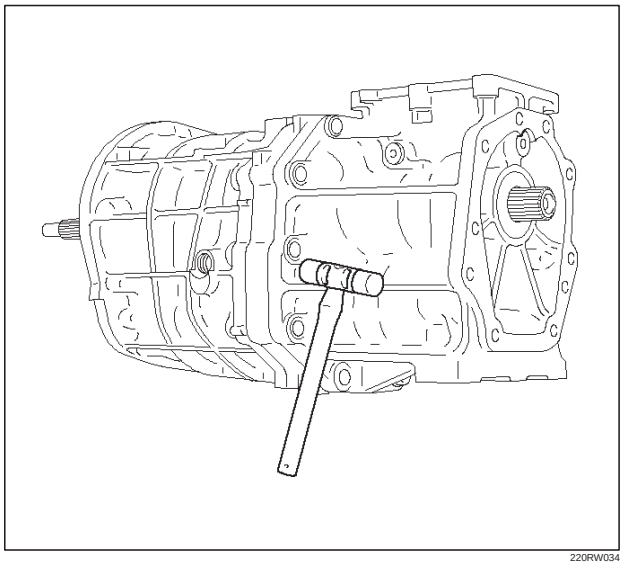

220RW034

4. Using 10 bolts, install the transfer adapter.

Torque: 37 N·m (27 lb ft)

NOTE:

- Tighten the all bolts evenly.
- Don’t damage the lip of the oil seal.
- Install the wire clamp (9) to the transfer adapter.

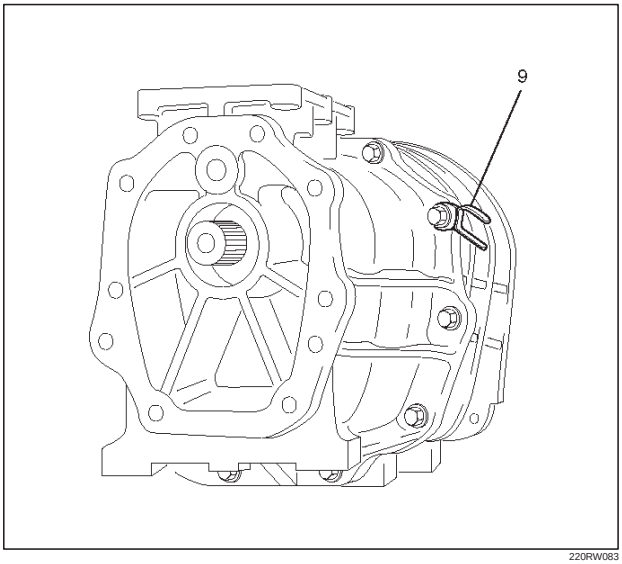

220RW083

37. Install the gear control box.
    1. Align the projection of the shift lever housing to the shift rod groove, and install the gear control rod.

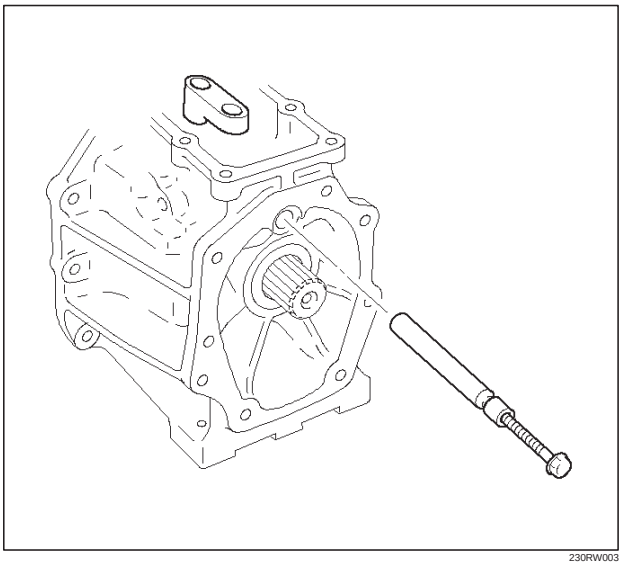

230RW003

Downloaded from www.Manualslib.com manuals search engine

2. Using a pin punch and hammer, drive in the slotted spring pin (2) to the shift lever housing.

NOTE: Be carefull not to drop the slotted spring pin.

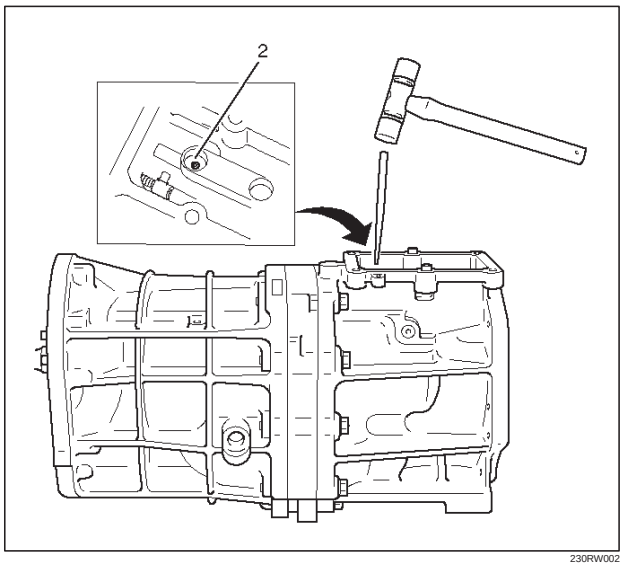

230RW002

3. Apply sealant (THREE BOND 1344 or equivalent) to the plug (1) thread.
4. Using hexagon wrench, install and torque the plug (1).

Torque: 18 N·m (13 lb ft)

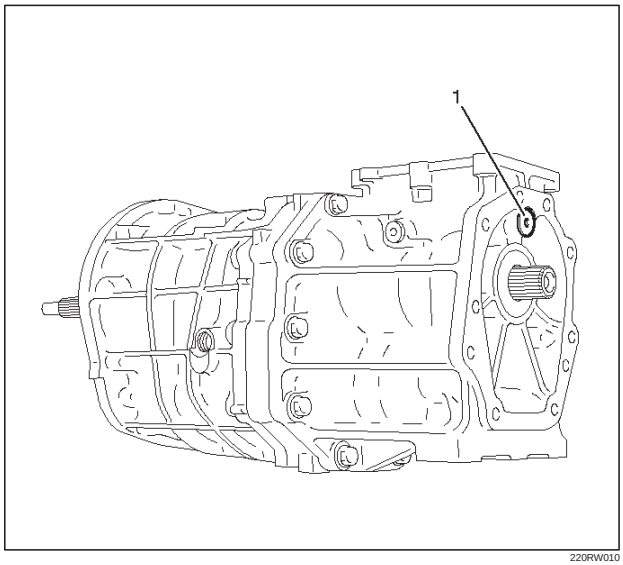

220RW010

5. Clean up the bolts and bolt hole.
6. Using 6 bolts, install the gear control box through the gasket.

Torque 18 N·m (13 lb ft)

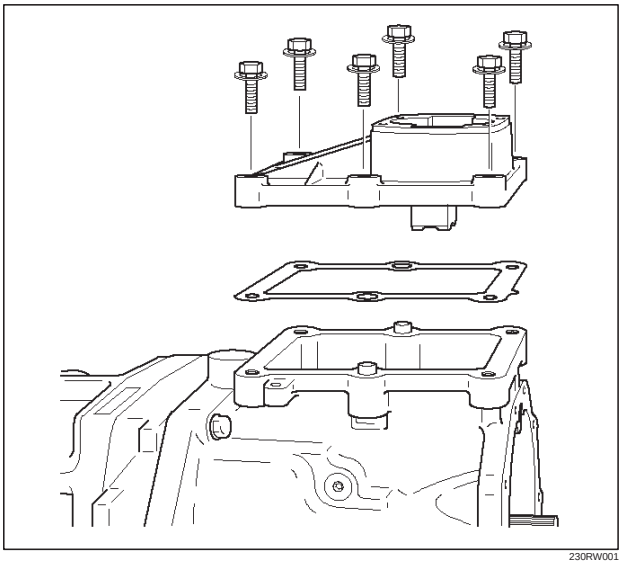

230RW001

38. Install clutch housing.
    1. Install the clutch housing to the transmission case.

Torque: 36 N·m (27 lb ft)

NOTE: Tighten the all bolts evenly.

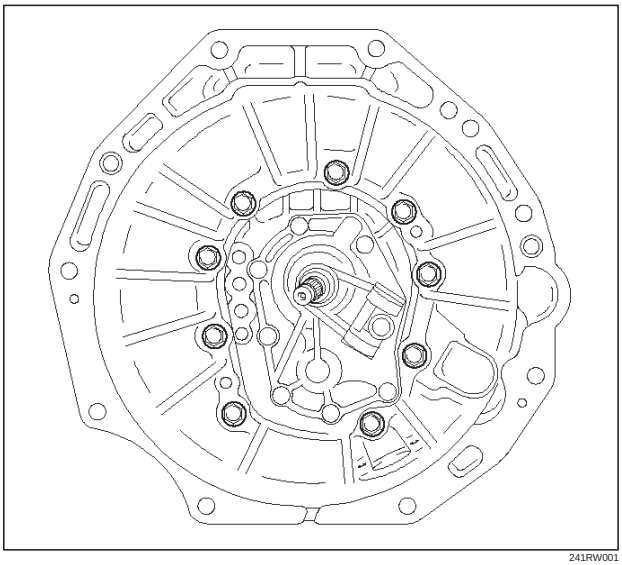

241RW001

Downloaded from www.Manualslib.com manuals search engine

39. Install the switches.
    1. Install the new gasket to the 1st and 2nd switch.
    2. Install the 1st and 2nd switch assembly (8).

    Torque: 39 N·m (29 lb ft)

    3. Install the new gasket to the backup light switch.
    4. Install the backup light switch assembly (6).

    Torque: 44 N·m (33 lb ft)

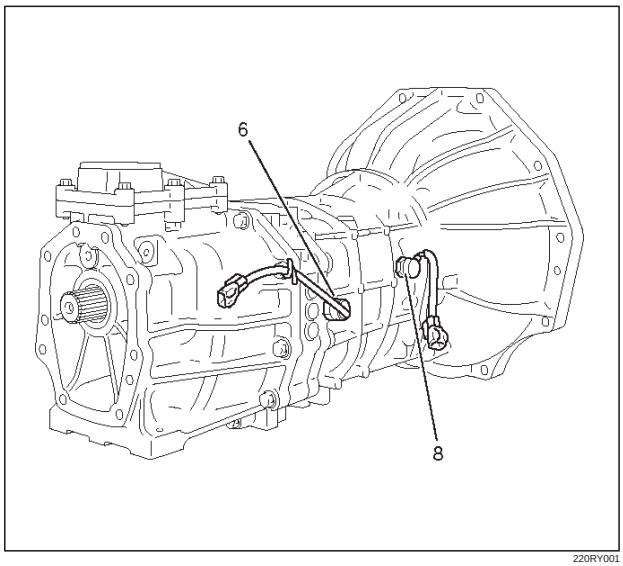

220RY001

40. Install the clutch release bearing (3) and clutch shift fork (5).
    1. Apply the clutch release grease.
        1. Fitting surface of the cylinder push rod.
        2. Fitting surface of the release bearing hub.
        3. The hole of the fork split pin (4).
    2. Apply the clutch release grease.
        1. The spline surface of the top gear shaft.
    3. Install the clutch shift fork (5).
    4. Install the snap pin.
    5. Install the clutch release bearing (3) to the clutch shift fork (5).

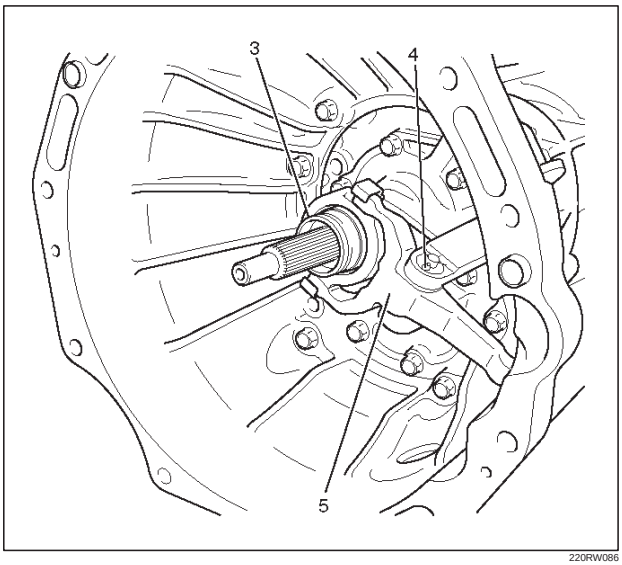

220RW086

41. Install the drain plug and filler plug.
    1. Install the drain plug (1) through the new gasket.

    Torque: 37 N·m (27 lb ft)

    2. Install the filler plug (2) through the new gasket.

    Reference: Plug after the gear oil fill in.

    Torque: 37 N·m (27 lb ft)

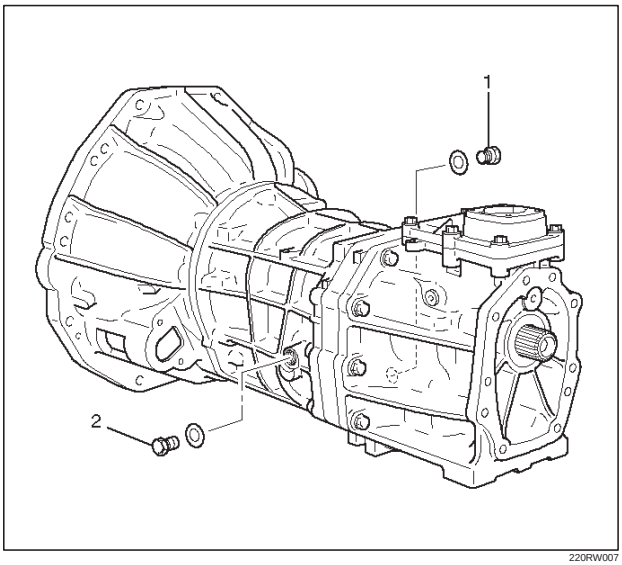

220RW007

Downloaded from www.Manualslib.com manuals search engine

Main Data and Specifications

General Specifications

Transmission type		Fully synchronized forward and reverse gears
Control method		Direct control with the gear shift lever on the floor
Gear ratio	1st	3.954
	2nd	2.330
	3rd	1.436
	4th	1.000
	5th	0.788
	Rev	3.918
Oil capacity lit (US qt)		2.7 (2.86)
Type of lubricant		Engine oil : Refer to the chart in “SECTION 0”

Torque Specifications

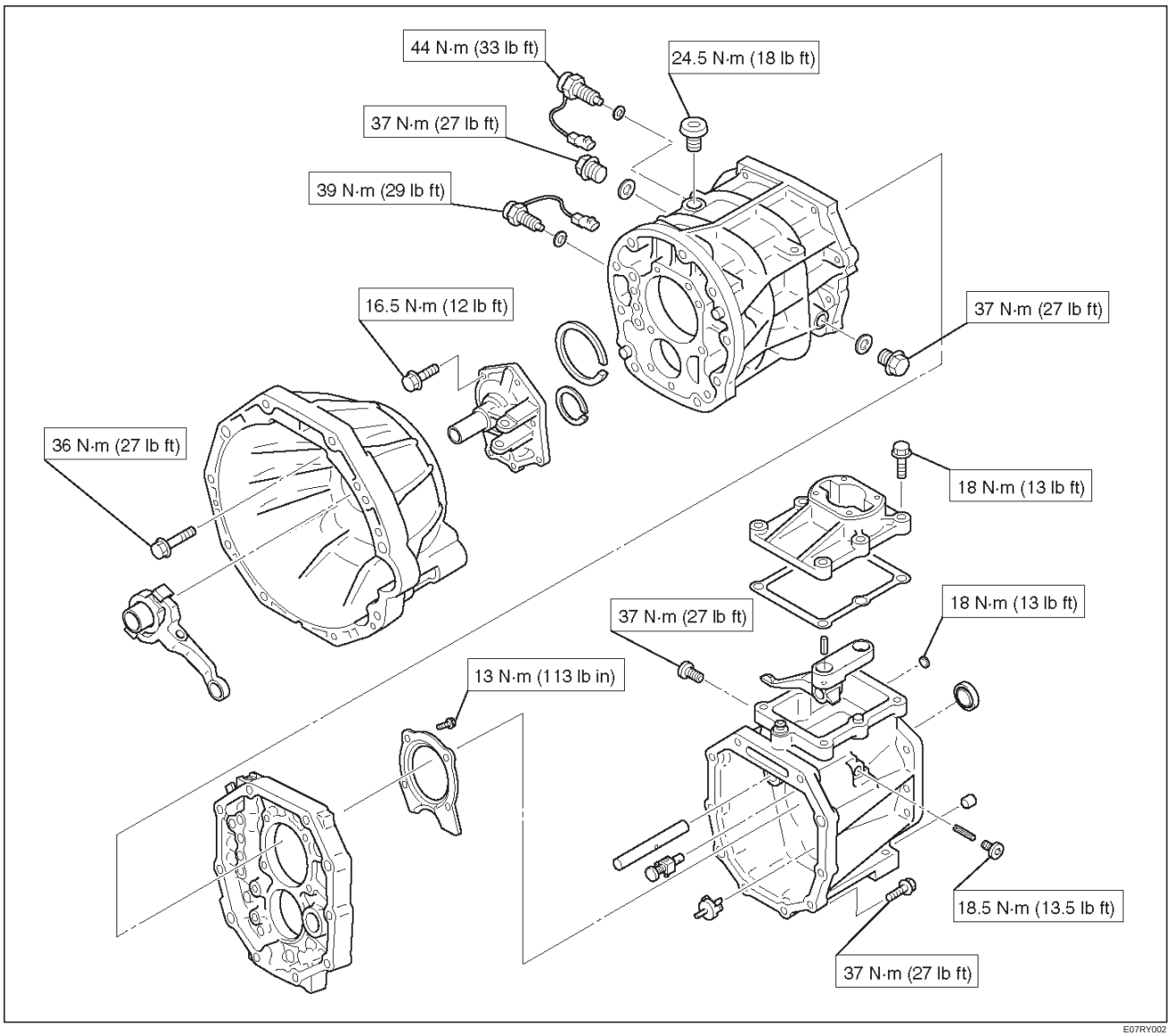

E07RY002

Downloaded from www.Manualslib.com manuals search engine

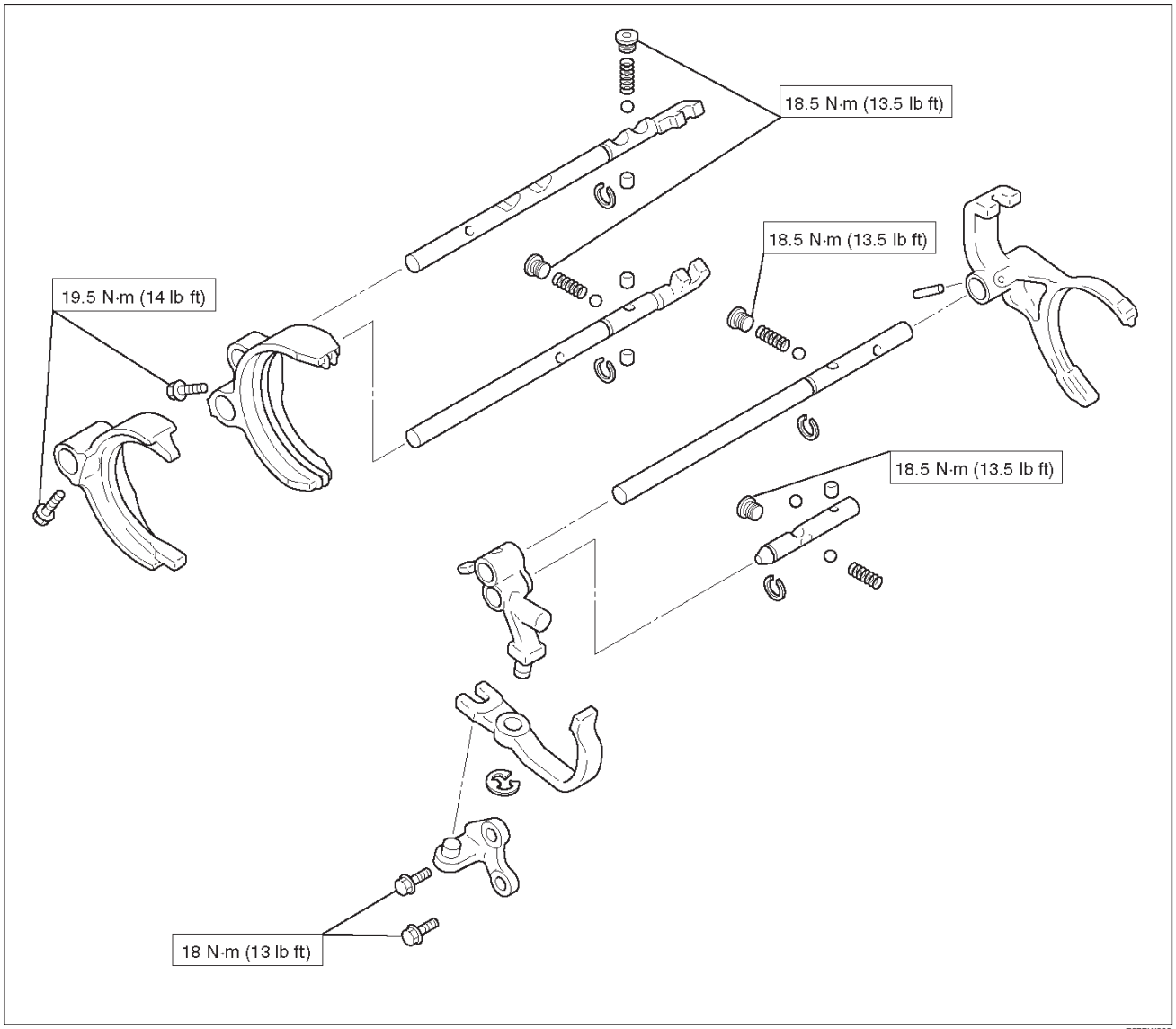

E07RW030

Downloaded from www.Manualslib.com manuals search engine

Special Tools

ILLUSTRATION	**TOOL NO.** TOOL NAME
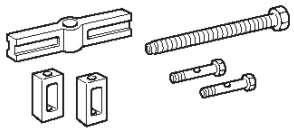 901RW201	**J–42794** Gear spline pieace remover
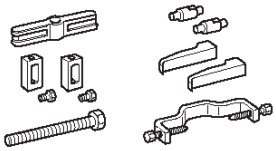 901RW202	**J–42795** Center bearing remover
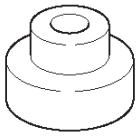 901RW203	**J–42988** Attachment
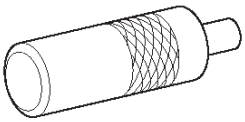 901RW204	**J–42796** Counter gear shaft center bearing installer
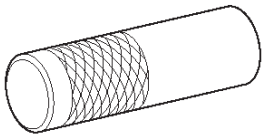 901RW205	**J–42797** Clutch hub (No.2) installer
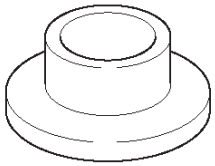 901RW206	**J–42798** Clutch hub (No.1) installer

ILLUSTRATION	**TOOL NO.** TOOL NAME
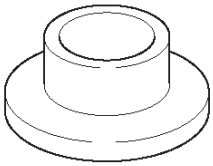 901RW206	**J–42799** Installer
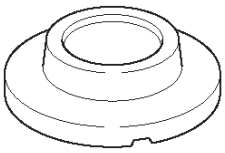 901RW207	**J–42800** Counter gear shaft front bearing installer
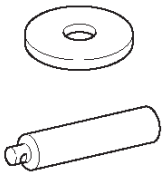 901RW208	**J–42904** Top gear shaft front bearing installer
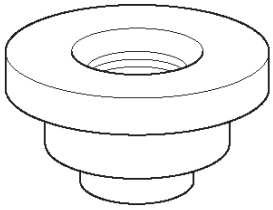 901RS296	**J–42801** Front rerainer oil seal installer
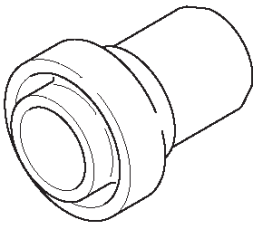 901RW095	**J–42802** Transfer adapter oil seal installer
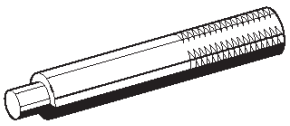 901RS218	**J–8092** Driver handle

Downloaded from www.Manualslib.com manuals search engine

ILLUSTRATION	**TOOL NO.** TOOL NAME
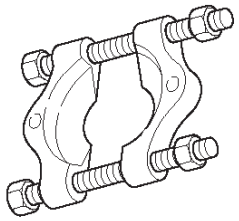	**J–22912–01** Bearing separator

Downloaded from www.Manualslib.com manuals search engine

TROOPER

TRANSMISSION

CLUTCH

CONTENTS

Service Precaution 7C–1
General Description 7C–2
Diagnosis 7C–6
Clutch Assembly 7C–7
Clutch Assembly and Associated Parts . . . 7C–7
Removal 7C–7
Inspection and Repair 7C–8
Installation 7C–12
Clutch Control 7C–15
Clutch Control Parts 7C–15
Removal 7C–15
Inspection and Repair 7C–15
Installation 7C–16
Adjustment 7C–16
Master Cylinder 7C–19
Inspection and Repair 7C–19
Slave Cylinder 7C–20
Disassembled View 7C–20
Disassembly 7C–20
Inspection and Repair 7C–20
Reassembly 7C–21
Main Data and Specifications 7C–22
Special Tools 7C–24

Service Precaution

WARNING: THIS VEHICLE HAS A SUPPLEMENTAL RESTRAINT SYSTEM(SRS). REFER TO THE SRS COMPONENT AND WIRING LOCATION VIEW IN ORDER TO DETERMINE WHETHER YOU ARE PERFORMING SERVICE ON OR NEAR THE SRS COMPONENTS OR THE SRS WIRING. WHEN YOU ARE PERFOMING SERVICE ON OR NEAR THE SRS COMPONENTS OR THE SRS WIRING, REFER TO THE SRS SERVICE INFORMATION. FAILURE TO FOLLOW WARNINGS COULD RESULT IN POSSIBLE AIR BAG DEPLOYMENT, PERSONAL INJURY, OR OTHERWISE UNNEEDED SRS SYSTEM REPAIRS.

CAUTION: Always use the correct fastner in the proper location. When you reolace a fastener, use ONLY the exact part number for that application. ISUZU will call out those fasteners that requir a replacement after removal. ISUZU will also call out the fasteners that requir thread lockers or thread sealant. UNLESS OTHERWISE SPECIFIED , do not use supplemental coatings (Paints, greases, or other corrosion inhibitors) on threaded fastners or fastner joint interfaces. Generally,such coatings adversely affect the fastner torque and the joint clamping force, and may damage the fastner. When you install fasteners, use the correct tightening sequence and specifications. Following these instructions can help you avoid damage to parts and systems.

Downloaded from www.Manualslib.com manuals search engine

General Description

Clutch

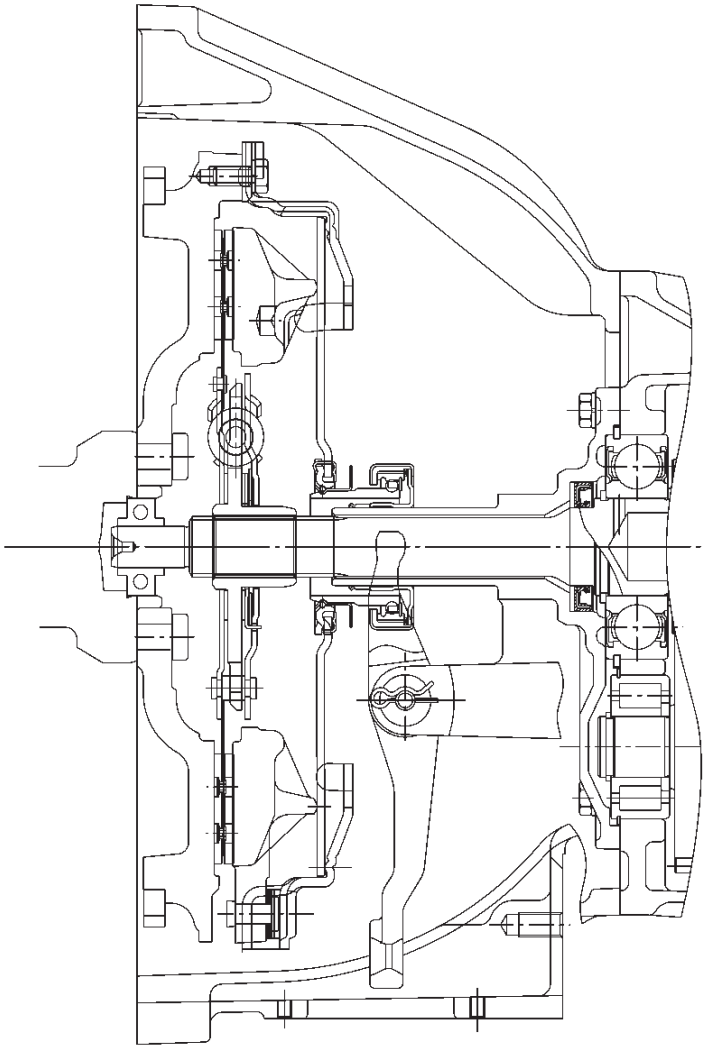

A07RW046

For 6VE1 (3.5L) engine model, the pull-type clutch is employed. The pull-type clutch is disengaged by pulling the release lever (release bearing) to disengage the pressure plate.

Downloaded from www.Manualslib.com manuals search engine

Master Cylinder

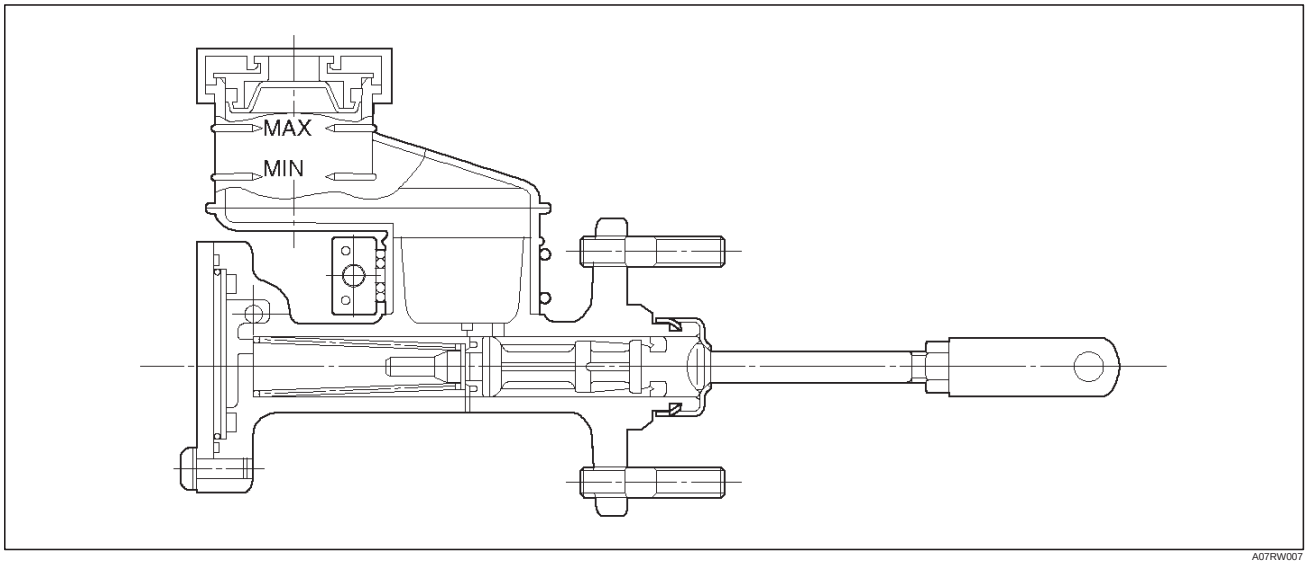

A07RW007

Slave Cylinder

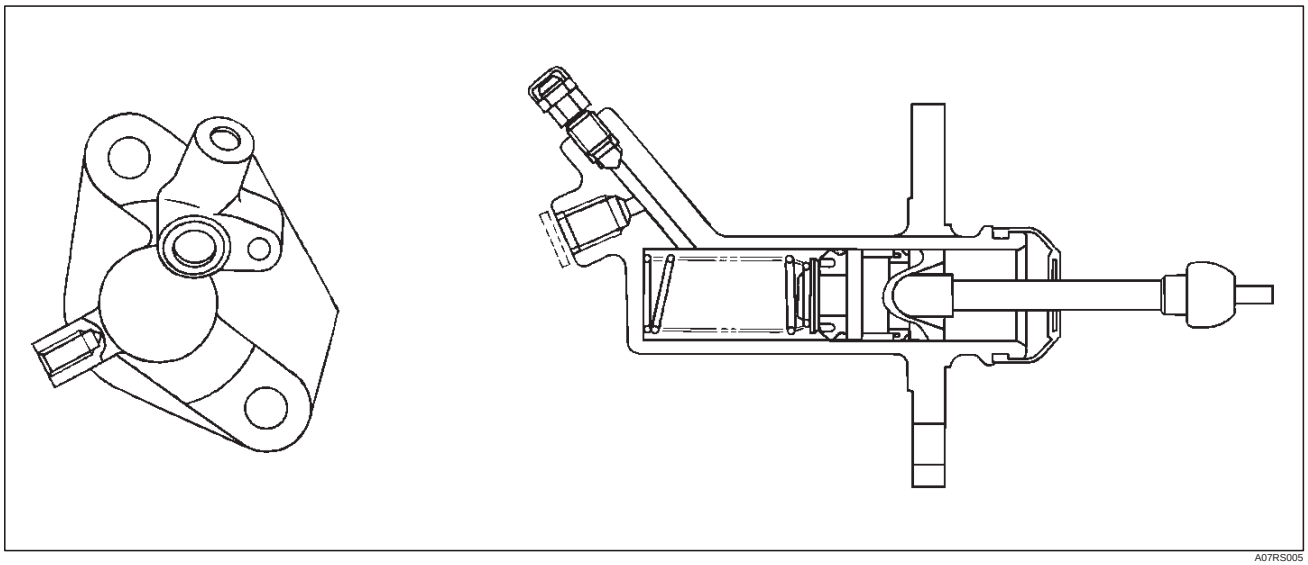

A07RS005

Downloaded from www.Manualslib.com manuals search engine

Pressure Plate Assembly

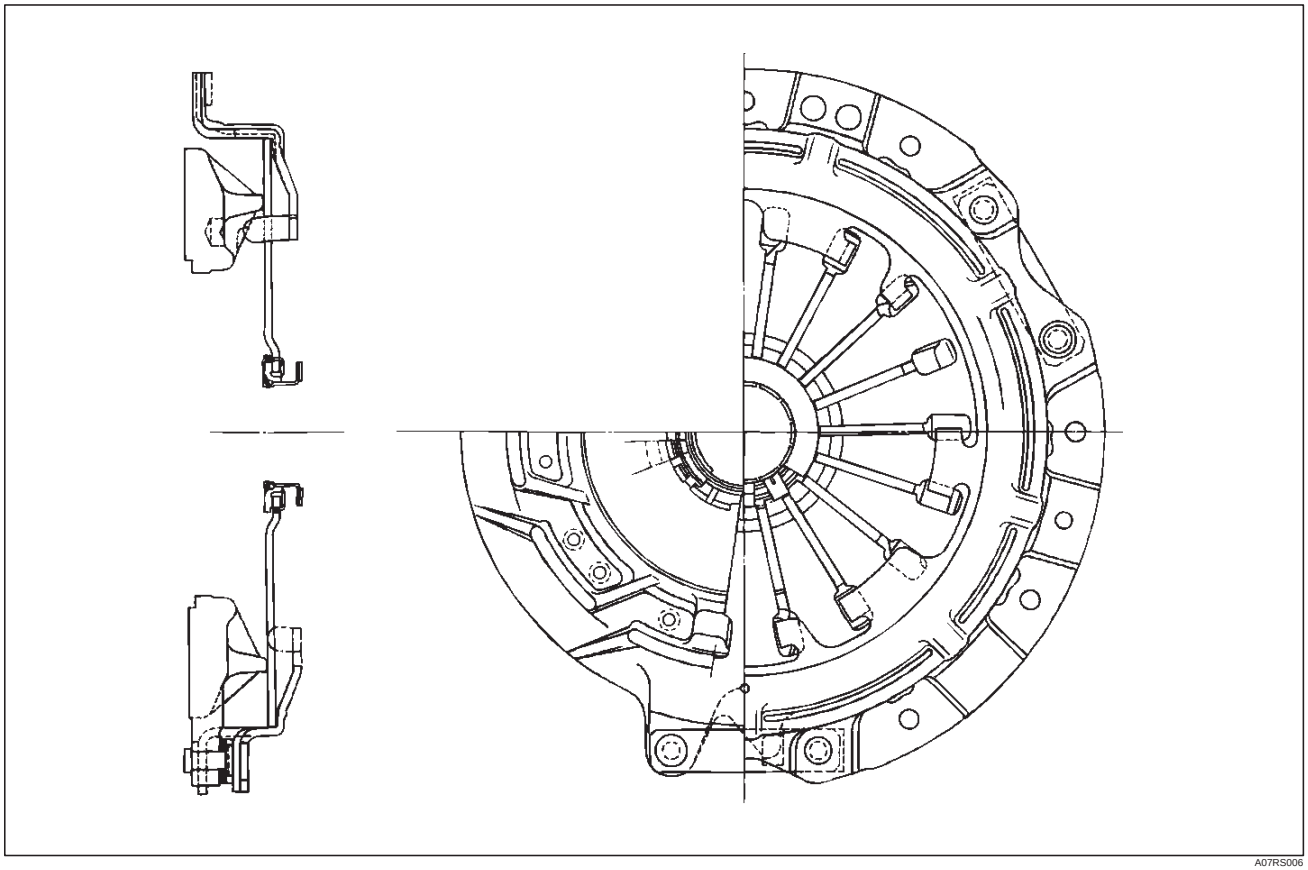

A07RS006

Downloaded from www.Manualslib.com manuals search engine

Driven Plate Assembly

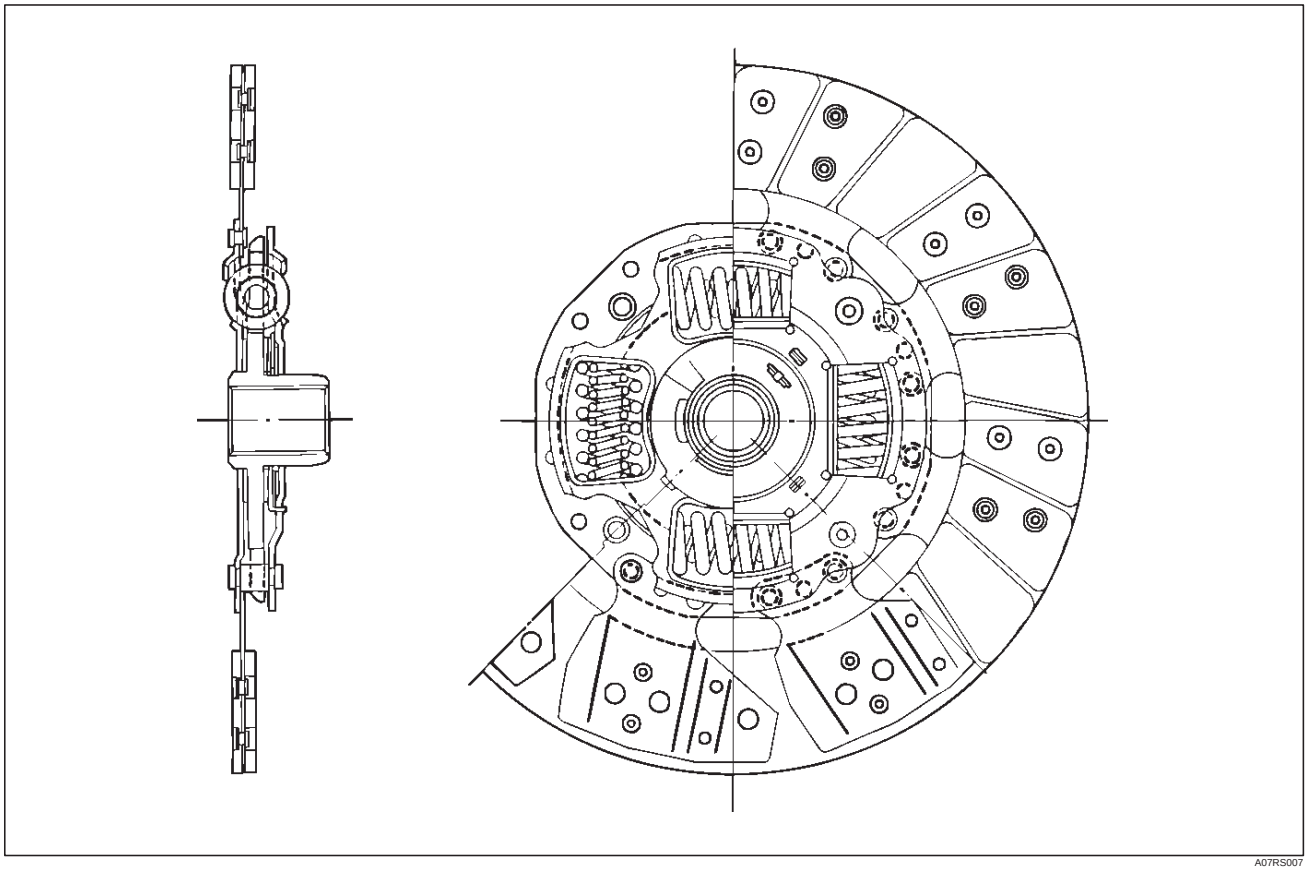

A07RS007

Downloaded from www.Manualslib.com manuals search engine

Diagnosis

Condition	Possible cause	Correction
Dragging	Fluid leakage.	Repair
	Air in hydraulic line.	Bleed
	Master cylinder and slave cylinder seals worn.	Replace seals.
	Driven plate warped.	Replace driven plate.
	Diaphragm spring weakened or tip of fingers worn.	Replace pressure plate
	Driven plate sticking on splines.	Lubricate with grease or replace.
	Clutch spline worn.	Repair
	Release bearing worn or damaged.	Replace release bearing.
Slipping	Driven plate facing worn or oil soaked.	Replace driven plate and check for leaks.
	Diaphragm spring weakened.	Replace pressure plate.
	Pressure plate or flywheel warped.	Correct or replace.
	Master cylinder and slave cylinder seals worn.	Replace seals.
Chattering	Engine mounts loose or damaged.	Tighten or replace.
	Driven plate facing warped.	Replace driven plate.
	Surface of facing hardened.	Replace driven plate
	Driven plate facing oil soaked.	Replace driven plate and check for leaks.
	Damper springs weakened or broken.	Replace.
	Pressure plate or flywheel warped.	Correct or replace.
Noisy	Replace bearing binding.	Correct, or replace if damaged, and lubricate.
	Replace bearing worn or damaged.	Replace release bearing.
	Release bearing poorly lubricated.	Lubricate.
	Pilot bearing worn.	Replace pilot bearing.
	Damper springs weakened or broken.	Replace driven plate.
	Rivets of driven plate exposed.	Replace driven plate.
Replace driven plate.	Hydraulic line blocked.	Clean out or replace.
	Master or slave cylinders binding.	Repair or replace as needed.

Downloaded from www.Manualslib.com manuals search engine

Clutch Assembly

Clutch Assembly and Associated Parts

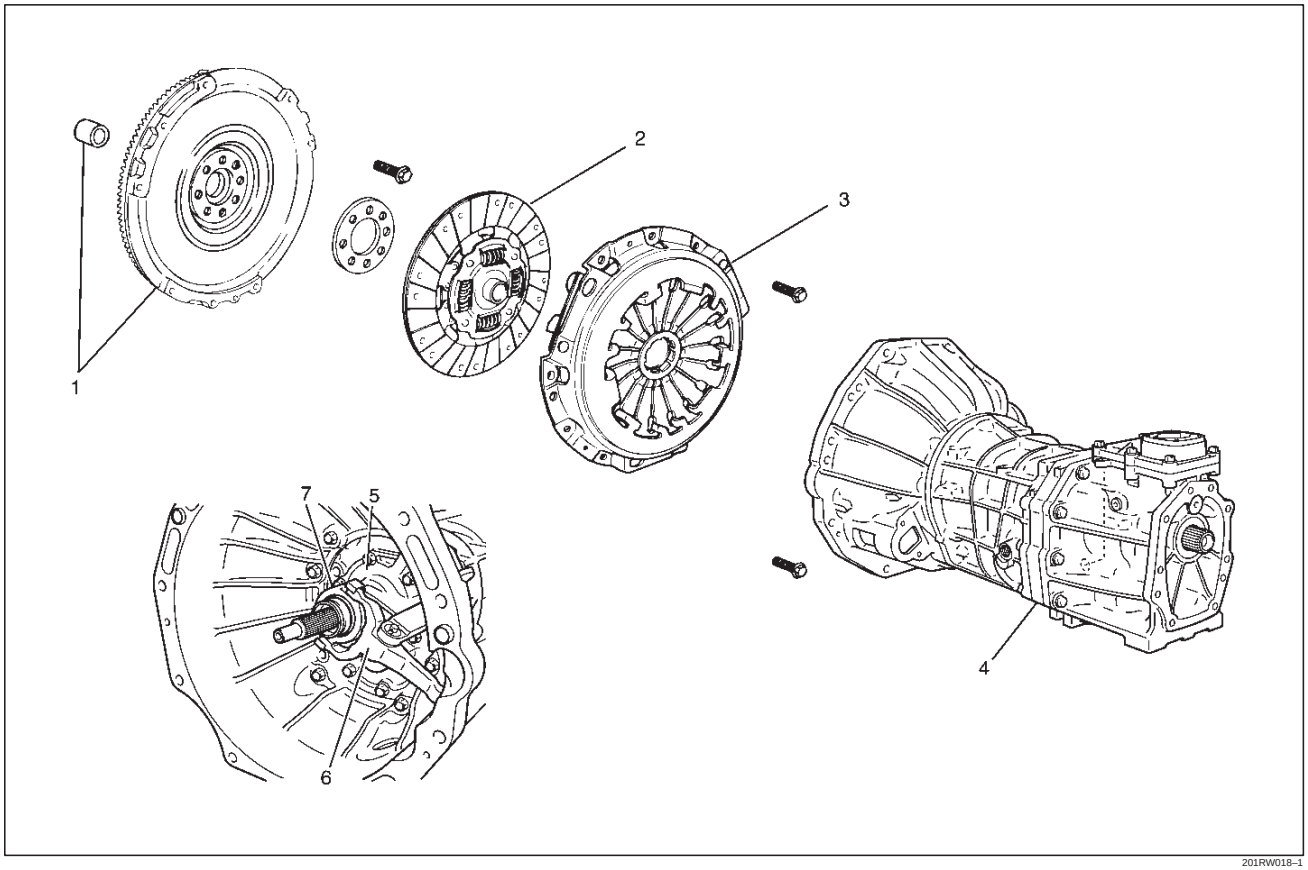

201RW018–1

Legend

(1) Flywheel Assembly and Crankshaft Bearing
(2) Driven Plate Assembly
(3) Pressure Plate Assembly
(4) Transmission Assembly
(5) Front Cover
(6) Shift Fork
(7) Release Bearing

Removal

1. Remove transmission assembly, refer to ”MANUAL TRANSMISSION” of Section 7B for ”Removal AND INSTALLATION” procedure.
2. Remove pressure plate assembly (2).
3. Remove driven plate assembly (1), use the pilot aligner J-24547 to prevent the driven plate assembly (1) from falling free.

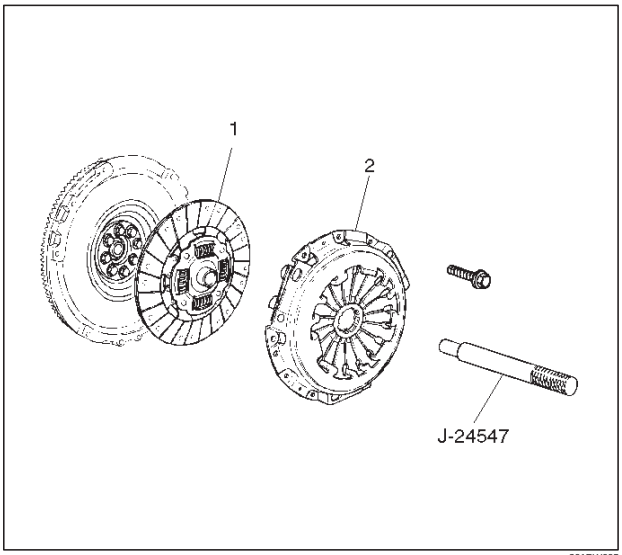

201RW005

Downloaded from www.Manualslib.com manuals search engine

4. Mark the flywheel, clutch cover and pressure plate lug for alignment when installing.
5. Remove the release bearing (3) from the transmission case .
6. Remove the shift fork snap pin.
7. Remove the shift fork pin and shift fork (4) from the front cover.
8. Remove the front cover bolts.
9. Remove the front cover (5) from the transmission case.

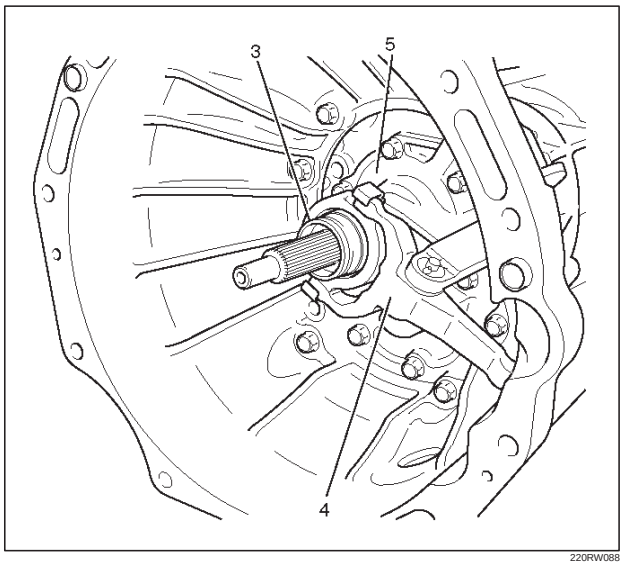

220RW088

10. Remove flywheel assembly and crankshaft bearing, do not remove except for replacement.
11. Use the remover J–5822 and sliding hammer J–23907 to remove the crankshaft bearing.

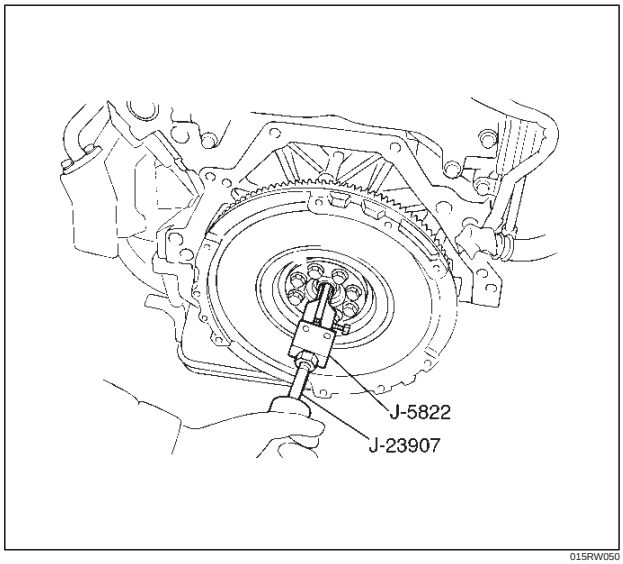

015RW050

Inspection and Repair

Make necessary correction or parts replacement if wear, damage, or any other abnormal condition are found through inspection.

Pressure Plate Assembly

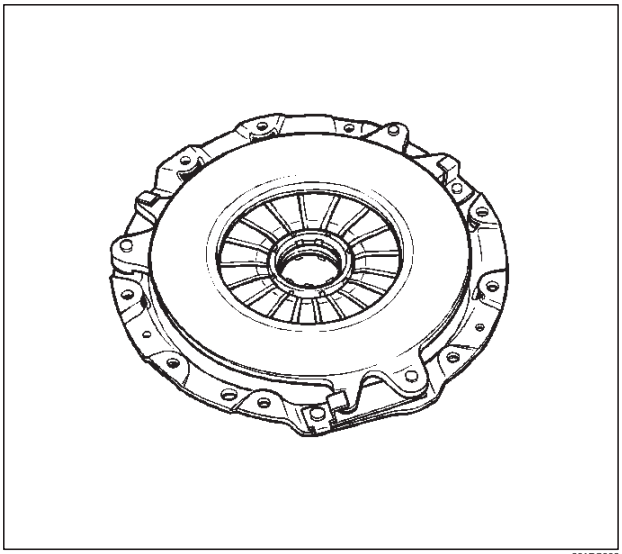
201RS002

1. Visually check the pressure plate friction surface for excessive wear and heat cracks.
2. If excessive wear or deep heat cracks are present, the pressure plate must be replaced.

Pressure Plate Warpage

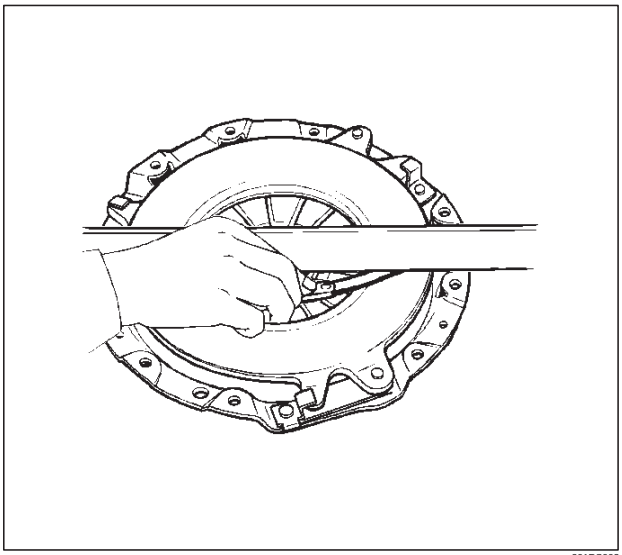
201RS003

Downloaded from www.Manualslib.com manuals search engine

1. Use a straight edge and a feeler gauge to measure the pressure plate friction surface flatness in four directions.
2. If any of the measured values exceeds the specified limit, the pressure plate must be replaced.

Pressure Plate Warpage

Limit: 0.3 mm (0.012 in)

Clutch Cover

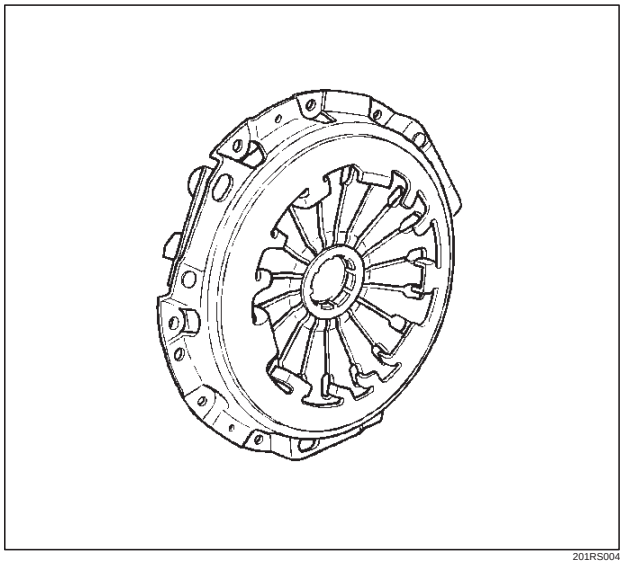

201RS004

1. Visually check the entire clutch cover for excessive wear, cracking, and other damage.
2. The clutch cover must be replaced if any of these conditions are present.

Clutch Set Force

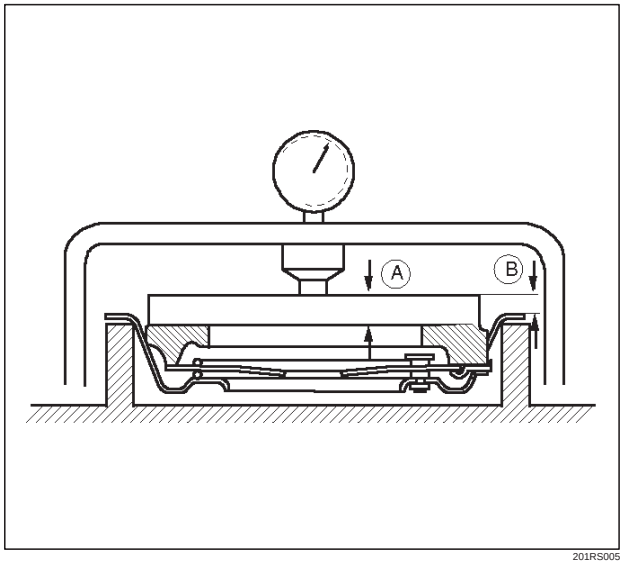

201RS005

1. Invert the pressure plate assembly.
2. Place a new driven plate over the pressure plate. A metal sheet with A thickness of 8.3 mm (0.327 in) may be used in place of the driven plate.
3. Compress the pressure plate assembly until the distance B becomes 12 mm (0.472 in).
4. Note the pressure gauge reading.
5. If the measured value is less than the specified limit, the pressure plate assembly must be replaced.

Clutch Set Force

Standard: 7208 N (1621 lb)

Limit: 6468 N (1454 lb)

Diaphragm Spring Finger Height

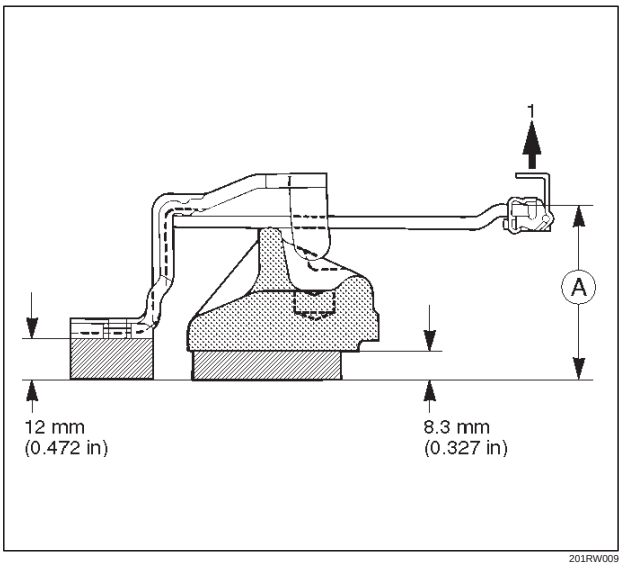

201RW009

Legend

(1) Release Side

1. Place a new driven plate or a 8.3 mm (0.327 in) spacer beneath the pressure plate.
2. Fully compress the pressure plate and diaphragm spring.
3. There are two ways to do this.
4. Use a bench press to press down on the assembly from the top.
5. Tighten the fixing bolts.

NOTE: Preload on diaphragm spring finger must be 49 – 98 N (11 – 22 lb) in direction of release, when clutch cover assembly is bolted to the flywheel.

6. Measure the spring height from base to spring tip A. If the measured value exceeds the specified limit, the pressure plate assembly must be replaced.

Spring Finger Height

Standard: 49.9 mm – 51.9 mm (1.965 in – 2.043 in)

Downloaded from www.Manualslib.com manuals search engine

Driven Plate Assembly

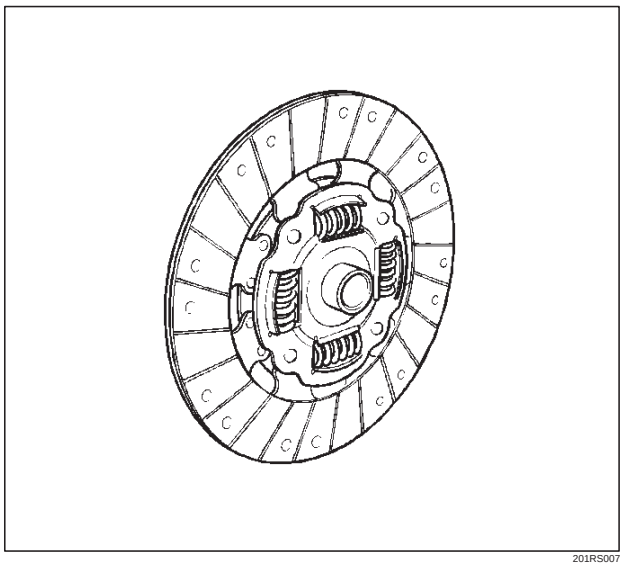

201RS007

1. Visually check the torsion spring for looseness, breakage, and weakening.
2. If any of these conditions are discovered, the driven plate assembly must be replaced.
3. Visually check the facing surfaces for cracking and excessive scorching.
4. Visually inspect the facing surfaces for the presence of oil or grease.
5. If any of these conditions are discovered, the facing must be cleaned or replaced.
6. Check that the driven plate moves smoothly on the transmission top gear shaft spline.
7. Minor ridges on the top gear shaft spline may be removed with an oil stone.

Driven Plate Warpage

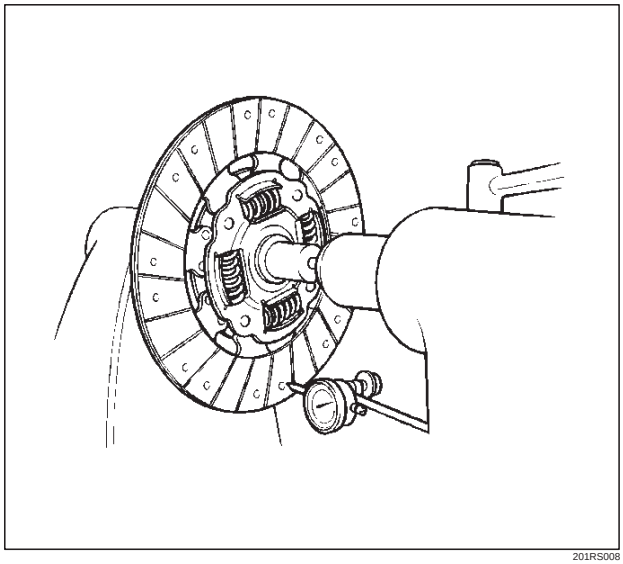

201RS008

1. Insert the clutch pilot aligner into the driven plate splined hub.
2. The clutch pilot aligner J-24547 must be held perfectly horizontal.
3. Set a dial indicator to the driven plate outside circumference.
4. Slowly turn the driven plate.
5. Read the dial indicator as you turn the driven plate.
6. If the measured value exceeds the specified limit, the driven plate assembly must be replaced.

Driven Plate Warpage

Standard: 0.7 mm (0.028 in)

Limit: 1.0 mm (0.039 in)

Driven Plate Splined Hub Spline Wear

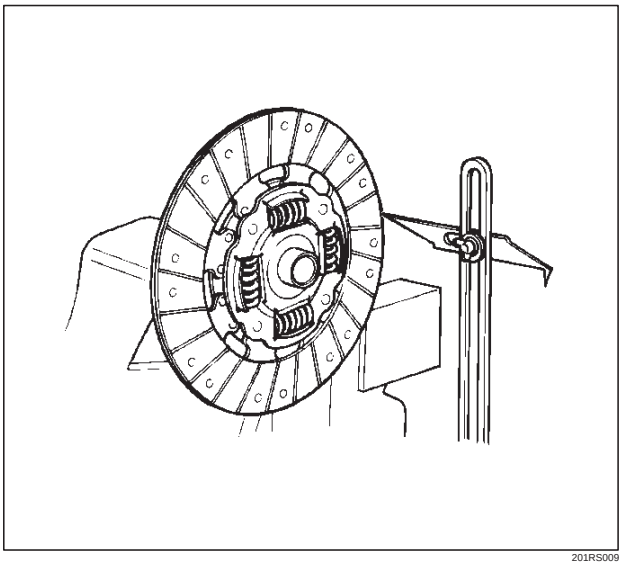

201RS009

1. Clean the driven plate splined hub.
2. Install the driven plate to the transmission top gear shaft spline.
3. Set a surface gauge to the driven plate outside circumference.
4. Slowly turn the driven plate counterclockwise.
5. Measure the spline rotation play as you turn the driven plate.
6. If the measured value exceeds the specified limit, the driven plate assembly must be replaced.

Driven Plate Splined Hub Spline Wear

Standard: 0.5 mm (0.020 in)

Limit: 1.0 mm (0.039 in)

Downloaded from www.Manualslib.com manuals search engine

Rivet Head Depression

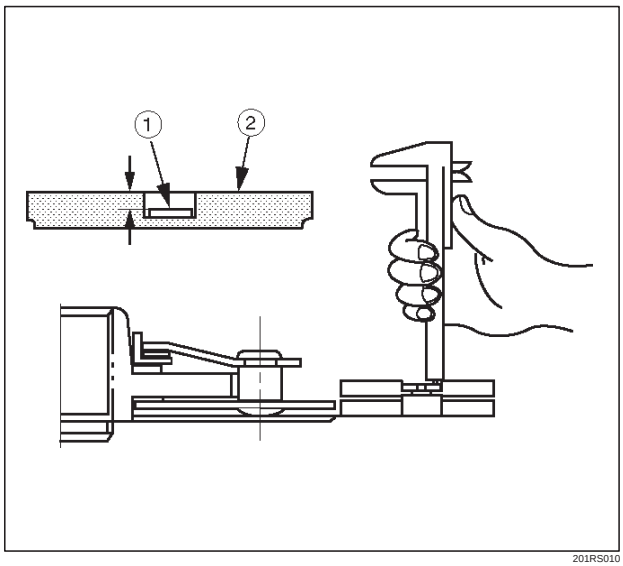

201RS010

1. Use a depth gauge or a straight edge with steel rule to measure the rivet head depression 1 from the facing surface 2.
2. Be sure to measure the rivet head depression on both sides of the driven plate.
3. If the measured value is less than the specified limit, the driven plate assembly must be replaced.

Rivet Head Depression

Standard: 1.95 mm (0.077 in)

Limit: 0.2 mm (0.008 in)

Release Bearing

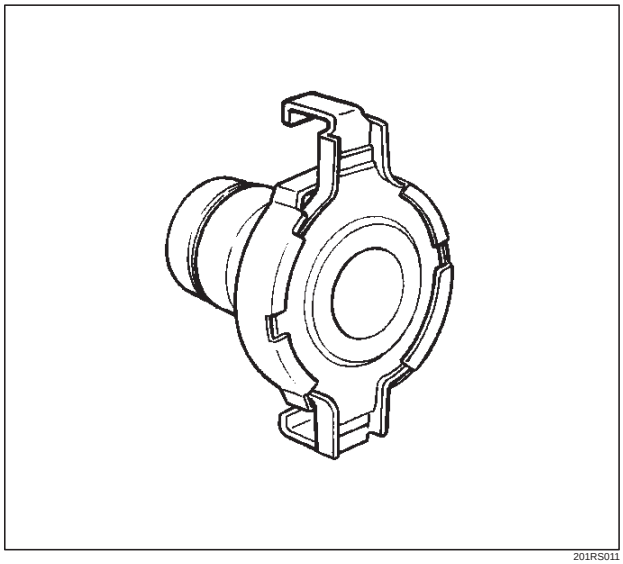

201RS011

1. Visually check the release bearing for excessive play, noise and breakage.
2. If any of these conditions are discovered, the release bearing must be replaced.
3. When replacing the release bearing, replace both the wedge collar and wire ring at the same time.

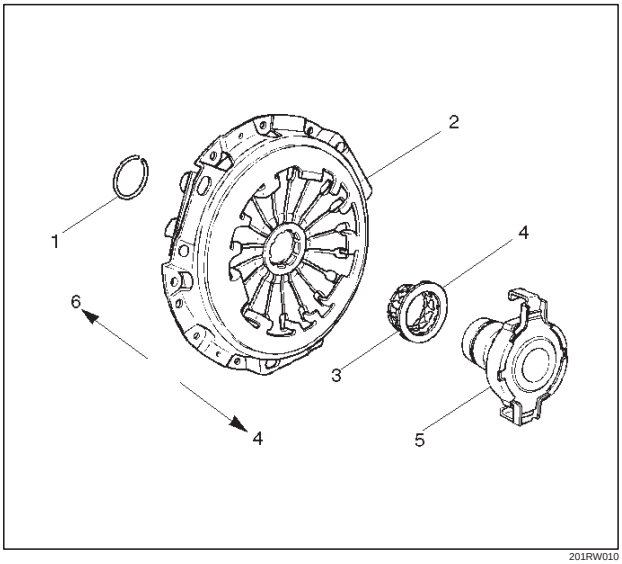

201RW010

Legend

(1) Wire Ring
(2) Pressure Plate Assembly
(3) Wedge Collar
(4) T/M Side
(5) Release Bearing
(6) Engine Side

Wedge Collar

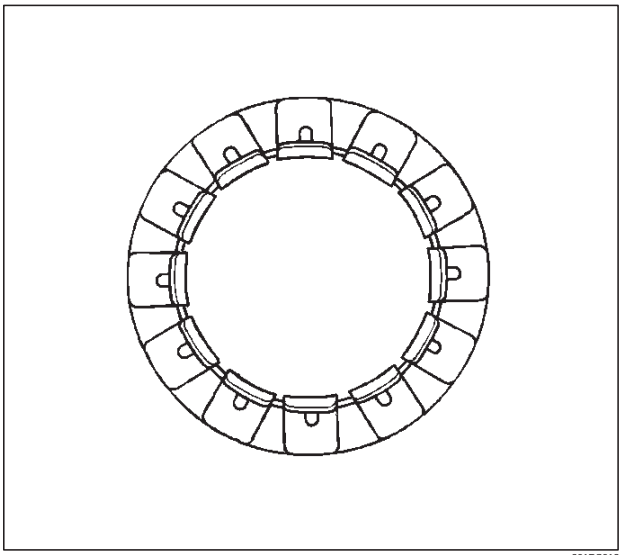

201RS013

1. Visually check the surfaces of the wedge collar making contact with the release bearing for excessive wear and damage.
2. Replace any exhibiting excessive wear or damage.

Downloaded from www.Manualslib.com manuals search engine

Shift Fork

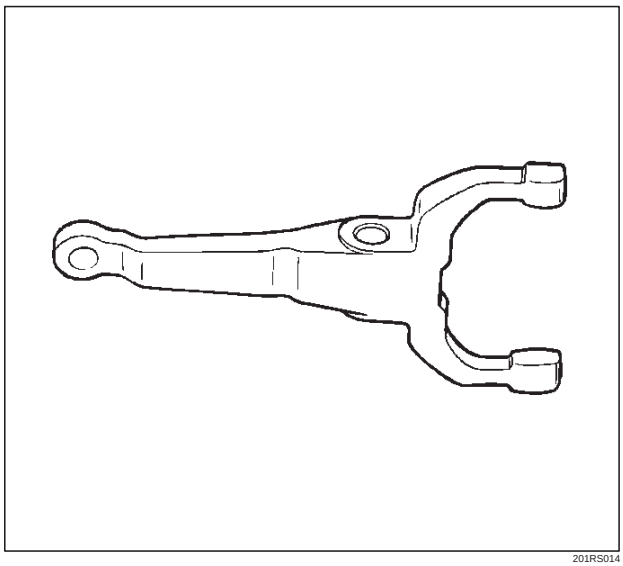

201RS014

1. Visually check the surfaces of the shift fork making contact with the release bearing for excessive wear and damage.
2. Remove any minor stepping or abrasion from shift fork with an oil stone.
3. Replace any exhibiting excessive wear or damage.

Installation

To install, follow the removal steps in the reverse order, noting the following points:

1. Install flywheel assembly and crankshaft bearing, use the installer J-26516-A and driver handle J-8092 to install the crankshaft bearing then clean and lubricate with grease.

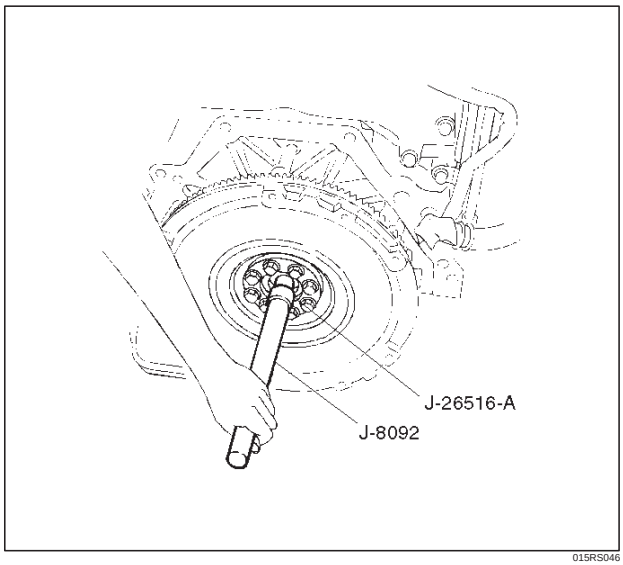

015RS046

2. Install new flywheel fixing bolts in the order illustrated and tighten them to the specified torque.

   Torque: 54 N·m (40 lb ft)

NOTE: Do not reuse the bolt and do not apply oil or thread lock to the bolt.

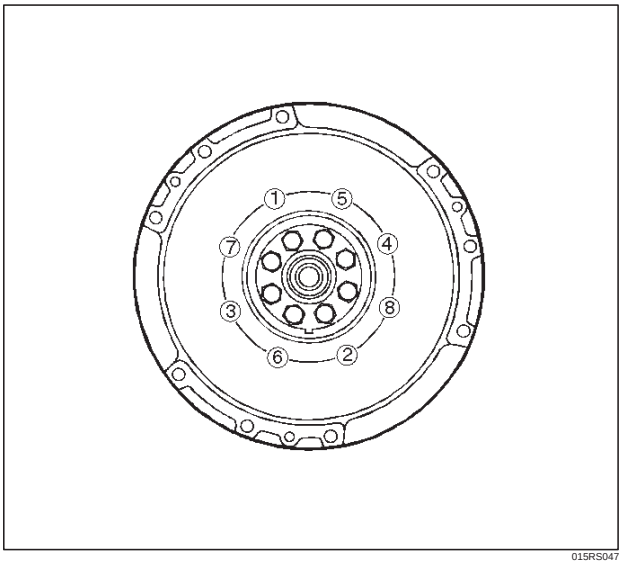

015RS047

3. Install the front cover (5) to the transmission case.
4. Tighten three fulcrum bridge bolts to the specified torque.

   Torque: 16.5 N·m (12 lb ft)

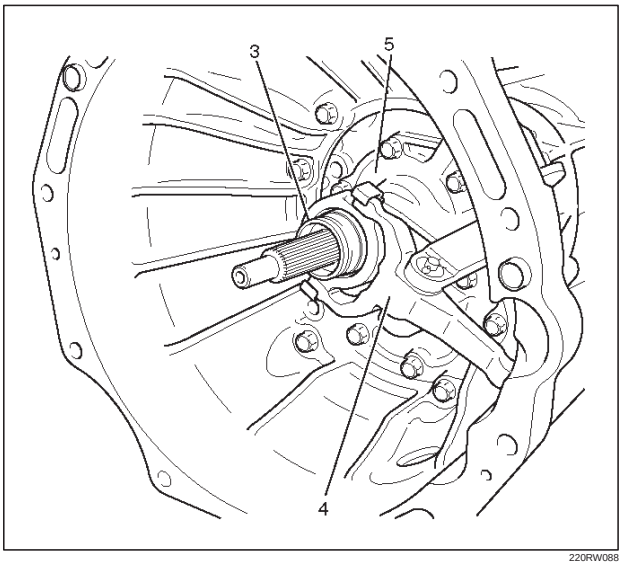

220RW088

5. Apply molybednum disulfide type grease to the pin hole inner circumferences and thrust surfaces.
6. Attach the shift fork to the front cover and insert the pin from below of the front cover.

Downloaded from www.Manualslib.com manuals search engine

7. Install the washer and snap pin.

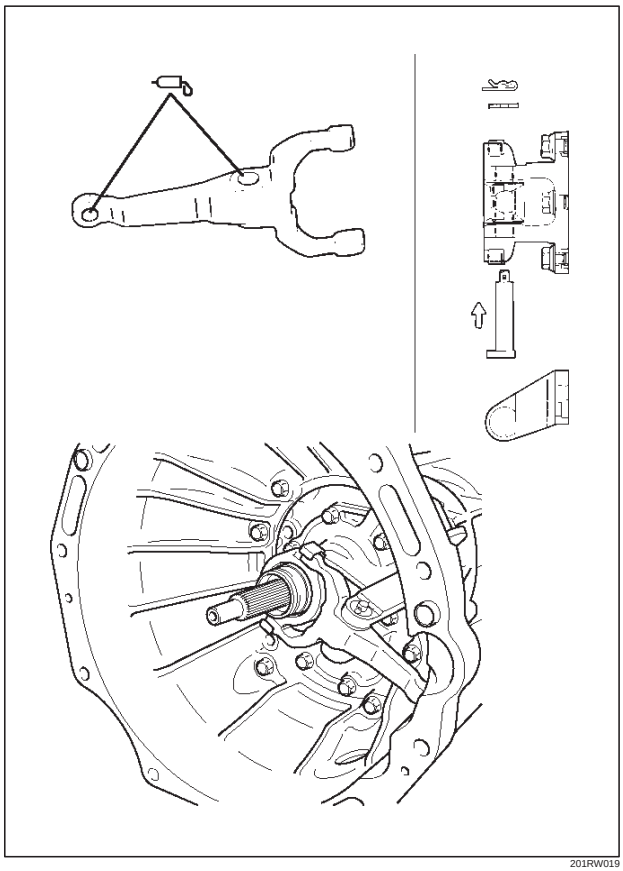

201RW019

8. Apply molybdenum disulfide type grease to the areas shown in illustration.

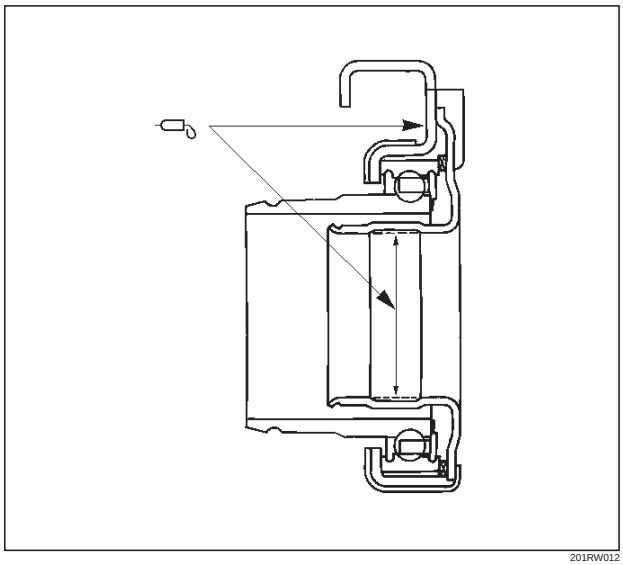

201RW012

9. Install the release bearing in the proper direction.

NOTE: Ensure release bearing is properly positioned during installation, as shown in illustration.

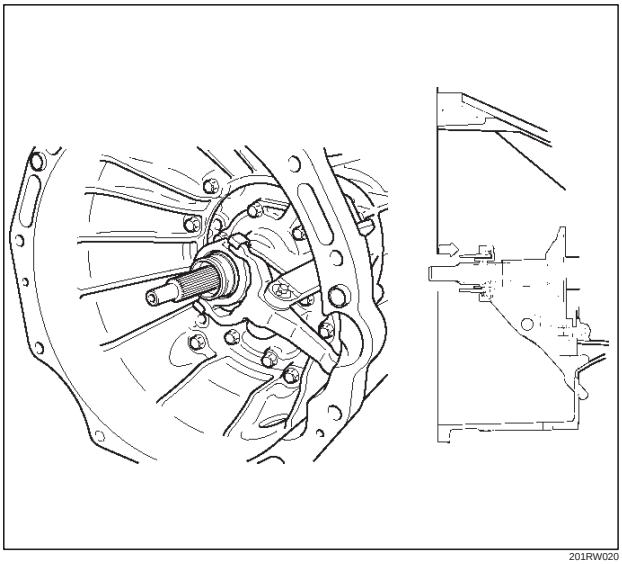

201RW020

10. Install driven plate assembly, use the pilot aligner J-24547 to install the driven plate assembly.

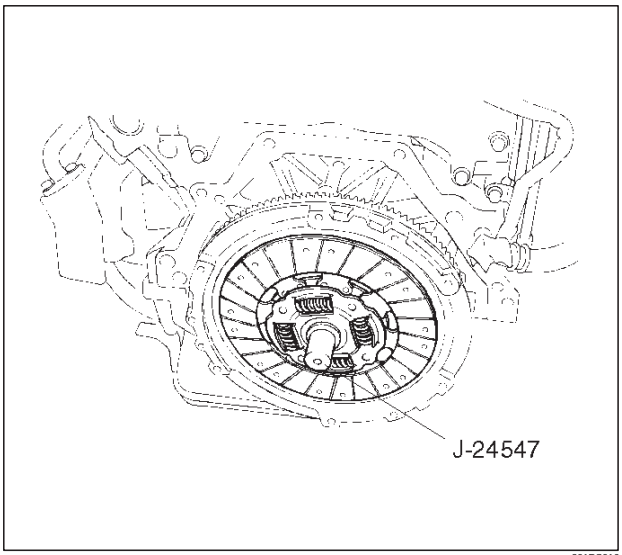

201RS016

Downloaded from www.Manualslib.com manuals search engine

11. Install pressure plate assembly and tighten the bolts holding the pressure plate assembly in the order shown in illustration.

Torque: 18 N·m (13 lb ft)

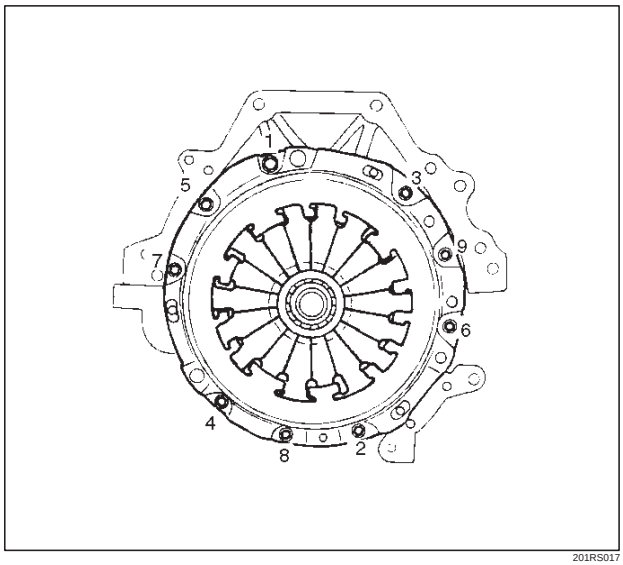

201RS017

12. Remove the aligner.

NOTE: Do not strike the aligner with a hammer to remove it.

13. Install transmission assembly.

Downloaded from www.Manualslib.com manuals search engine

Clutch Control

Clutch Control Parts

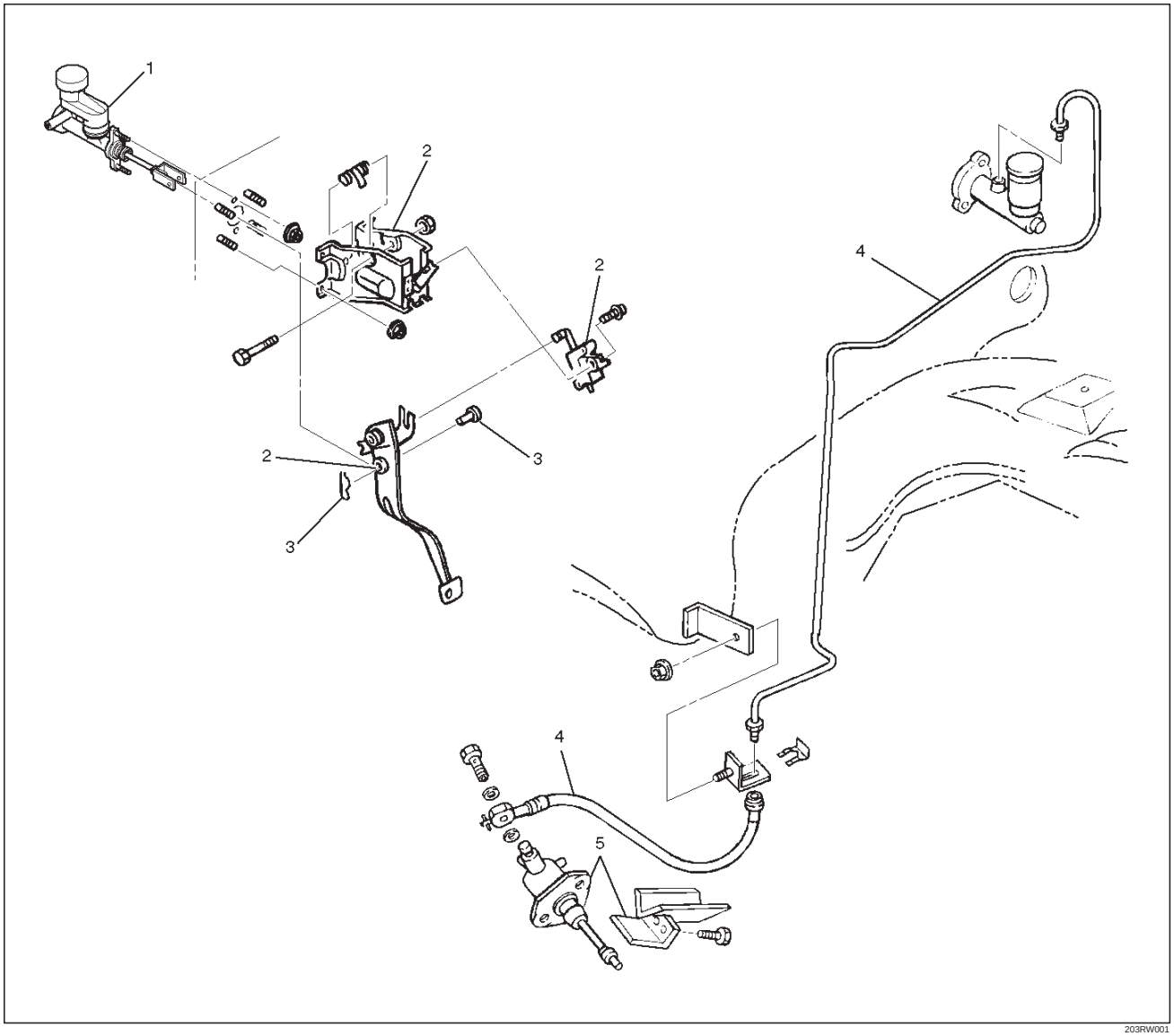

203RW001

Legend

(1) Master Cylinder Assembly
(2) Pedal Assembly and Switch
(3) Pin and Jaw Joint Pin
(4) Oil Line Pipe
(5) Slave Cylinder Assembly and Heat Protector

Removal

1. Remove pin and jaw joint pin.
2. Remove pedal assembly and switch.
3. Remove oil line pipe.
4. Remove slave cylinder assembly and heat protector.
5. Remove master cylinder assembly.
6. Remove damper cylinder assembly.

Inspection and Repair

Make necessary adjustments, repairs, and part replacement if wear, damage or other problems are discovered during inspection.

Downloaded from www.Manualslib.com manuals search engine

Installation

1. Install damper cylinder assembly.
2. Install master cylinder assembly.
3. Install slave cylinder assembly and heat protector.
4. Install oil line pipe.
5. Install pedal assembly and switch.
6. Install pin and jaw joint pin.

Adjustment

Clutch Pedal Adjustment

1. With clutch switch
   1. Disconnect clutch switch (2) connector.
   2. Loosen lock nut, then turn switch out until there is a gap between the switch plunger and clutch pedal.

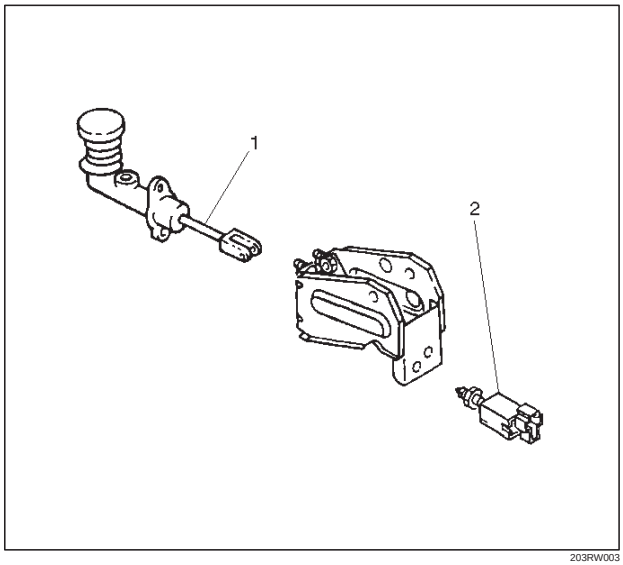

203RW003

Legend
(1) Push Rod
(2) Clutch Switch

2. Loosen clutch master cylinder push rod lock nut. Turn push rod by hand to set clutch pedal height (5) to within specification.

   Clutch pedal height (5): 217 mm – 227 mm (8.543 in – 8.937 in)

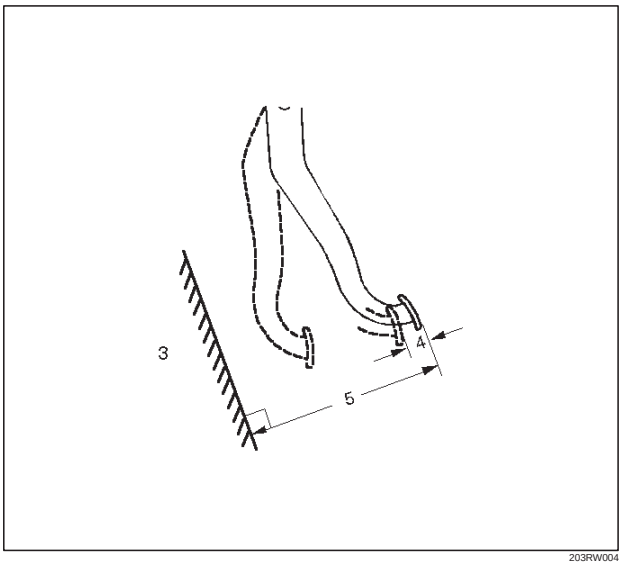

203RW004

Legend
(3) Floor Panel
(4) Pedal Free Play
(5) Clutch Pedal Height

3. Tighten push rod lock nut.
4. With clutch switch
   1. Turn the clutch switch until the switch bolt just touches the clutch pedal arm.

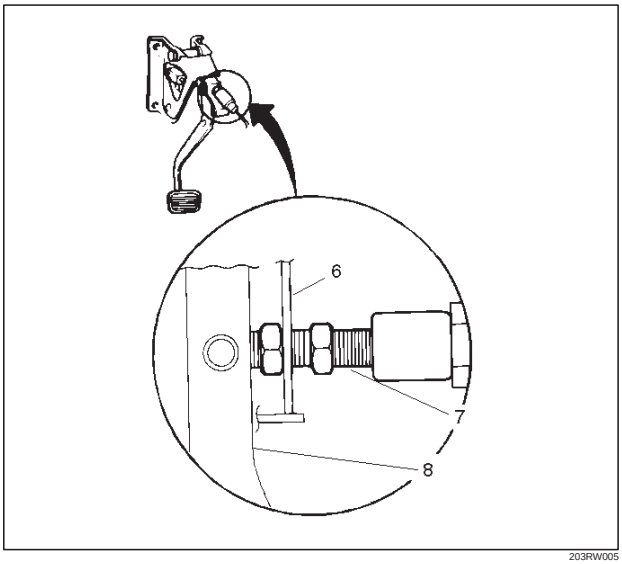

203RW005

Legend
(6) Blacket
(7) Clutch Switch Bolt
(8) Clutch Pedal Arm

Downloaded from www.Manualslib.com manuals search engine

2. Adjust clutch switch by backing it out half a turn, and measure the clearance (E) between the clutch pedal arm and the clutch switch.

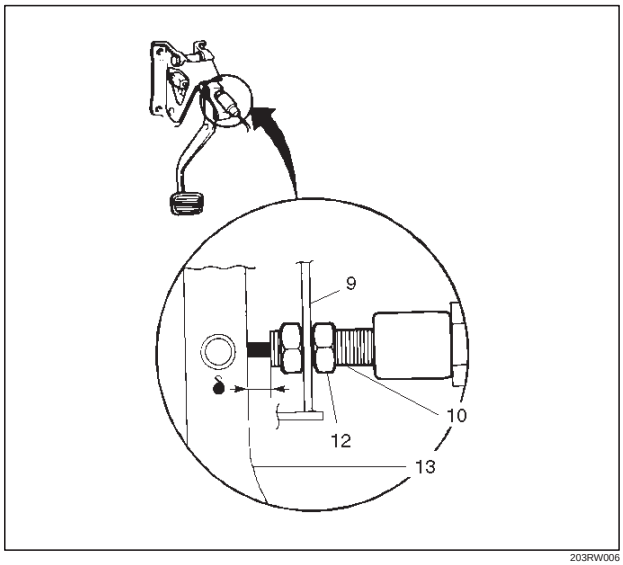

203RW006

Legend

(9) Back out Switch 1/2 turn
(10) Bracket
(11) Clutch Switch Bolt
(12) Lock Nut
(13) Clutch Pedal Arm

3. Lock the lock nut.
4. Connect clutch switch connector.

Clutch Switch and Clutch Pedal Clearance (E)

0.5 mm – 1.5 mm (0.020 in – 0.059 in)

5. After adjusting the clutch pedal height, push the clutch pedal by hand rightly to check the clutch pedal free play (4) to within specification.

Pedal Free Play (4)

5 mm – 15 mm (0.20 in – 0.59 in)

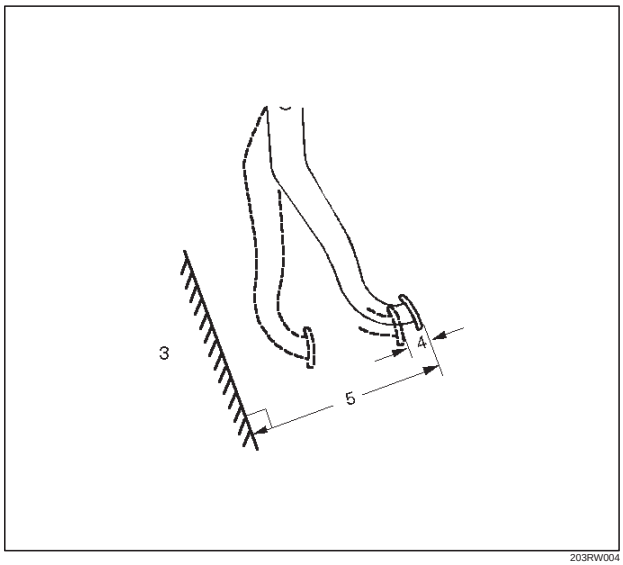

203RW004

6. Clutch pedal engagement height inspection:
   1. Operate the parking brake lever and block the wheels.
   2. Start the engine, fully step on the clutch pedal, and move the shift lever to 1st position.
   3. With the engine idling, release the clutch pedal slowly and measure its stroke just prior to its clutching position.

Clutch Pedal Engagement Height (14)

MIN. 30 mm (1.18 in)

7. If the measured value exceeds the specified limit, check the following points. Repair if necessary:
   - Hydraulic circuit for fluid leakage or air in circuit.
   - Clutch disc warped.
   - Diaphragm spring weakened or tip of fingers worn.
   - Driven plate sticking on sprines.
   - Release bearing worn or damaged.
   - Master cylinder and slave cylinder worn.

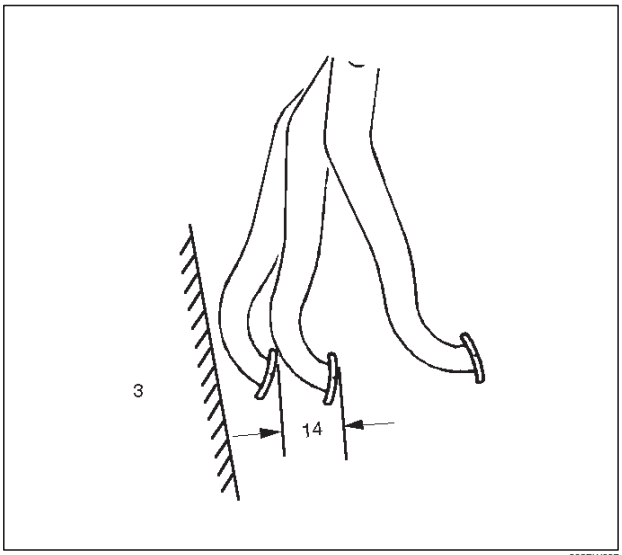

203RW007

Legend

(3) Floor Panel
(14) Clutch Pedal Engagement Height

Downloaded from www.Manualslib.com manuals search engine

Torque Specifications

- **Master cylinder to dash panel**
  Torque: 16 N·m (12 lb ft)
- **Clutch pedal to dash panel**
  Torque: 21 N·m (15 lb ft)
- **Master cylinder push rod to yoke**
  Torque: 17 N·m (12 lb ft)
- **Clutch pipe to master cylinder**
  Torque: 12 N·m (9 lb ft)
- **Clutch pipe to flexible hose**
  Torque: 16 N·m (12 lb ft)
- **Slave cylinder to case**
  Torque: 43 N·m (32 lb ft)
- **Slave cylinder bleeder screw**
  Torque: 8 N·m(69 lb in)
- **Flexible hose to slave cylinder**
  Torque: 20 N·m (14 lb ft)

Bleeding

1. Check the level of clutch fluid in the reservoir and replenish if necessary
2. Bleeding the slave cylinder.
   1. Remove the rubber cap from the bleeder screw and wipe clean the bleeder screw. Connect a vinyl tube to the bleeder screw and insert the other end of the vinyl tube into a transparent container.
   2. Pump the clutch pedal repeatedly and hold it depressed.

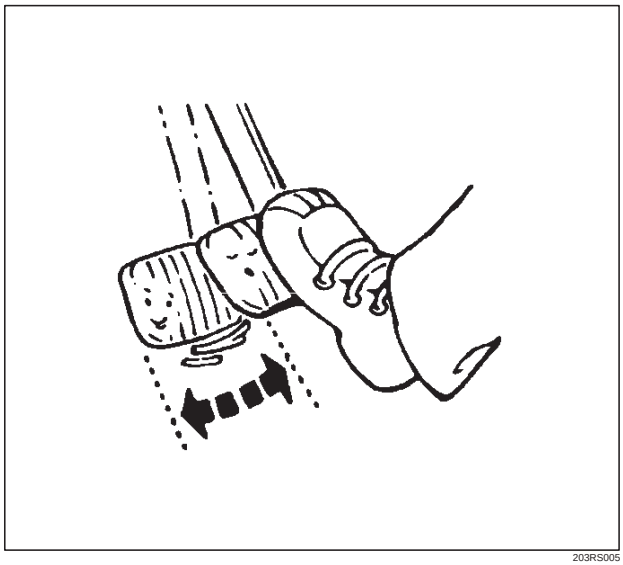

203RS005

   3. Loosen the bleeder screw to release clutch fluid with air bubbles into the container, then tighten the bleeder screw immediately.
   4. Release the clutch pedal carefully. Repeat the above operation until air bubbles disappear from the clutch fluid being pumped out into the container. During the bleeding operation, keep the clutch fluid reservoir filled to the specified level. Reinstall the rubber cap.

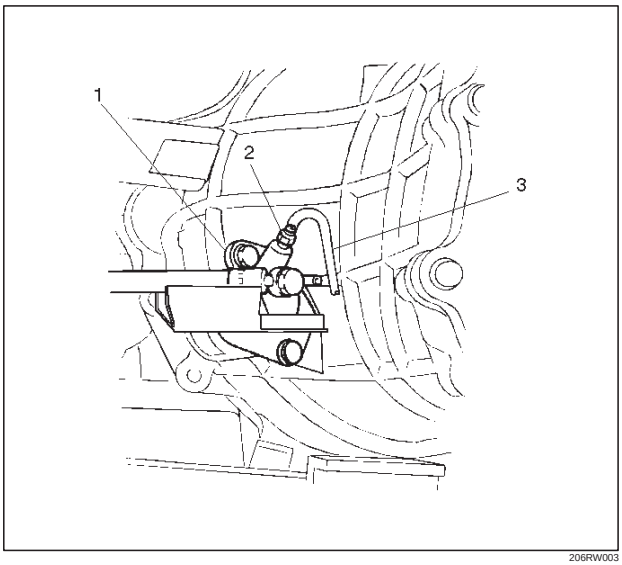

206RW003

Legend

(1) Slave Cylinder
(2) Bleeder Screw
(3) Vinyl Tube

Downloaded from www.Manualslib.com manuals search engine

Master Cylinder

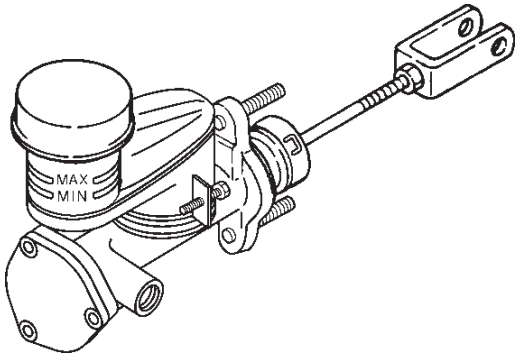

208RW017

Inspection and Repair

Inspect the removed parts. If there are abnormalities such as wear, oil leak or other damage, replace the master cylinder assembly.

NOTE: The master cylinder assembly cannot be disassembled because of point–staked rod stopper.

Downloaded from www.Manualslib.com manuals search engine

Slave Cylinder

Disassembled View

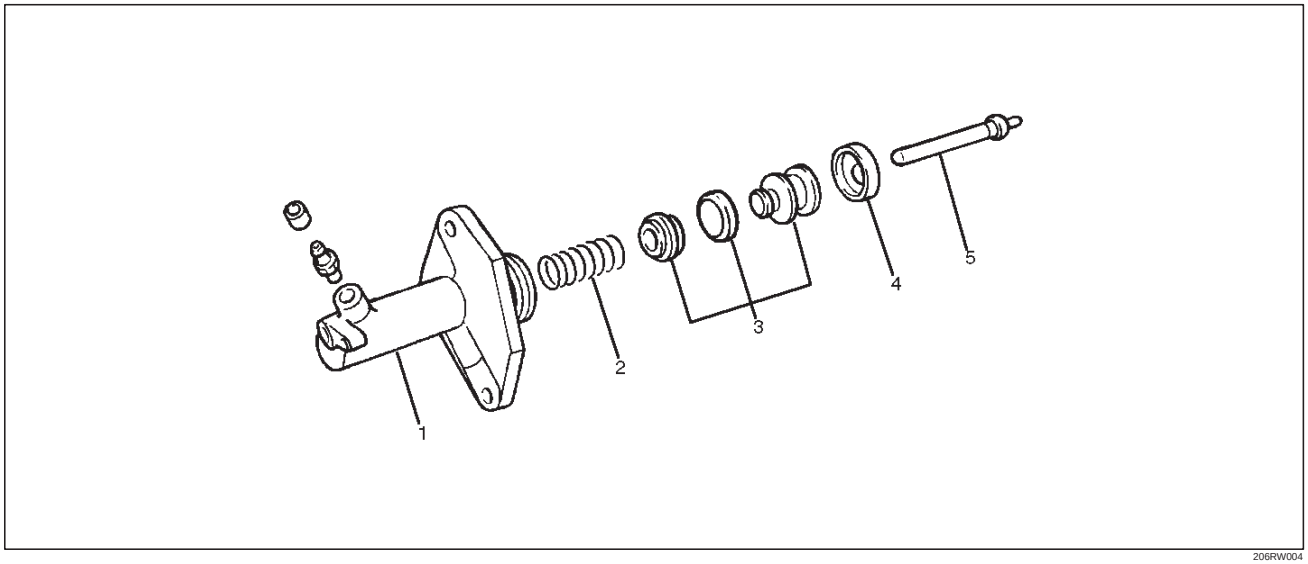

206RW004

Legend

(1) Cylinder Body
(2) Spring
(3) Piston and Piston Cup
(4) Boot
(5) Push Rod

Disassembly

1. Remove boot.
2. Remove push rod.
3. Remove piston and piston cup.
4. Remove spring.
5. Remove cylinder body.

Inspection and Repair

Make the necessary adjustments, repairs, and part replacements if excessive wear or damage is discovered during inspection.

Cylinder Body

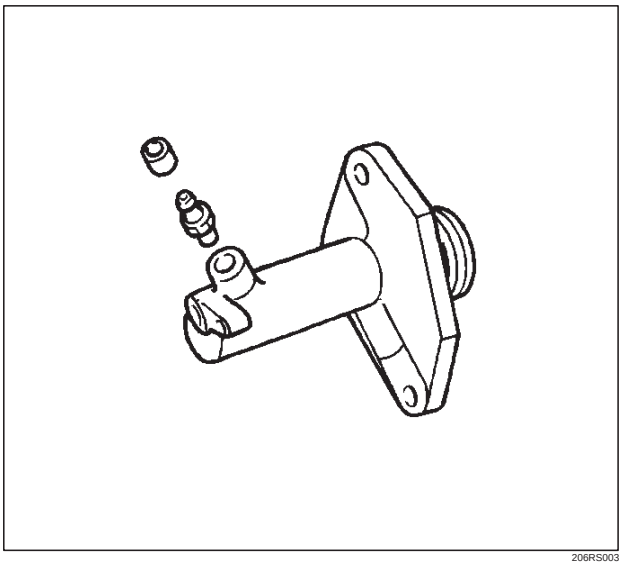

206RS003

1. Clean the cylinder body.
2. Check the fluid return port for restrictions and clean it if necessary.

Downloaded from www.Manualslib.com manuals search engine

Piston and Piston Cup

1. Visually inspect the disassembled piston and piston cup for excessive wear and damage.
2. Replace the inner parts with new parts shown in the illustration.

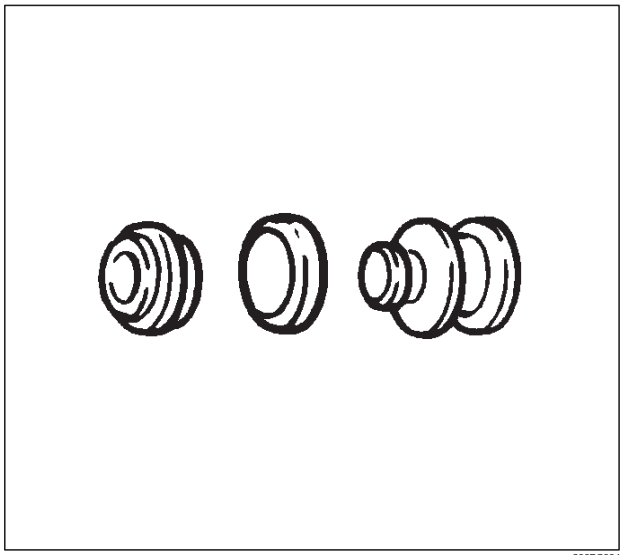

206RS004

3. Measure the clearance between slave cylinder wall and piston.
4. If the measured value exceeds the specified limit, the slave cylinder assembly must be replaced.

   Standard: 0.07 mm (0.0028 in)

   Limit: 0.15 mm (0.0059 in)

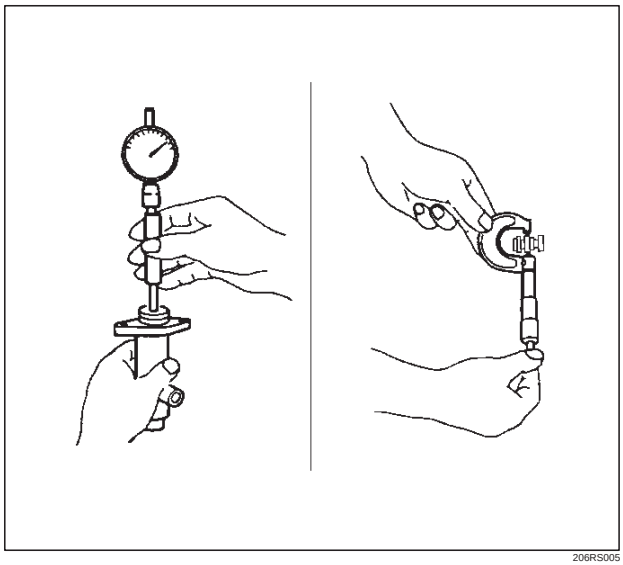

206RS005

Reassembly

To reassemble, follow the disassembly steps in the reverse order, noting the following points:

1. Before installing the parts, apply a thin coat of rubber grease.
2. Install cup in groove in piston with the lip turned to the front of cylinder. Use care so as not to scratch the cylinder.

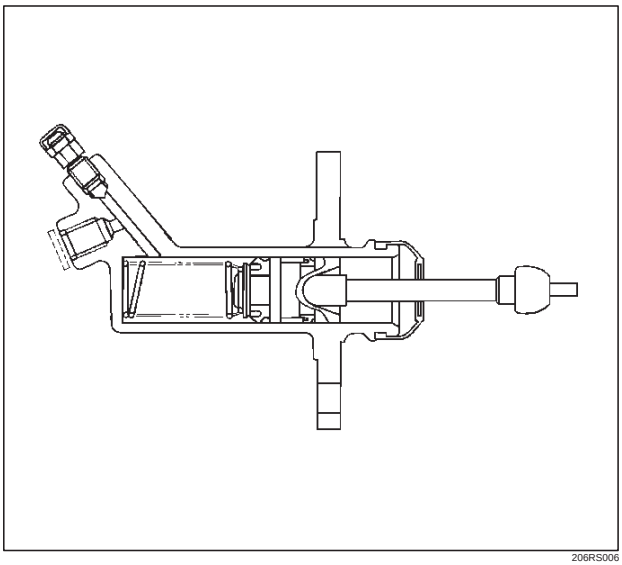

206RS006

Downloaded from www.Manualslib.com manuals search engine

Main Data and Specifications

General Specifications

Type	Dry single plate type with diaphragm spring
Size	275 mm (10.83 in)
Pressure plate Outside diameter	332 mm (13.07 in)
Pressure plate Clamping force	7208 N (1621 lb)
Pressure plate Spring finger height	49.9 – 51.9 mm (1.965 – 2.043 in)
Driven plate Outside diameter x inside diameter	275 × 180 mm (10.83 × 6.69 in)
Thickness Clutch disengaged	8.8 mm (0.346 in)
Thickness Clutch engaged	8.3 mm (0.327 in)
Total friction area	339 ×2 cm^2 (52 ×2 in^2)
Clutch control type	Hydraulic
Clutch pedal free play	5 – 15 mm (0.20 –0.59 in)
Clutch pedal height	217 –227 mm (8.543 –8.937 in)
Clutch pedal stroke	152.5 –162.5 mm (6.004 –6.398 in)

Torque Specifications

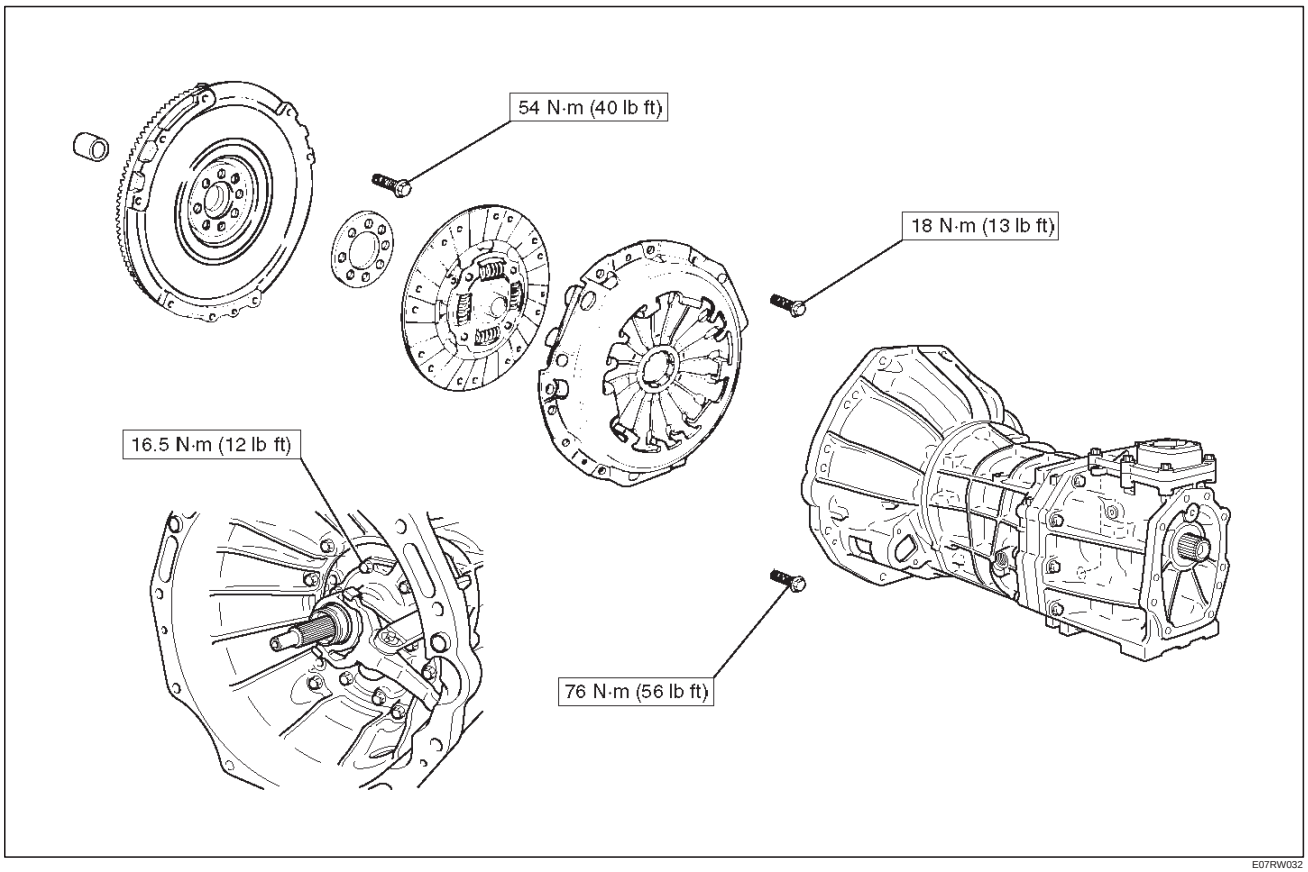

E07RW032

Downloaded from www.Manualslib.com manuals search engine

Torque Specifications (Cont'd)

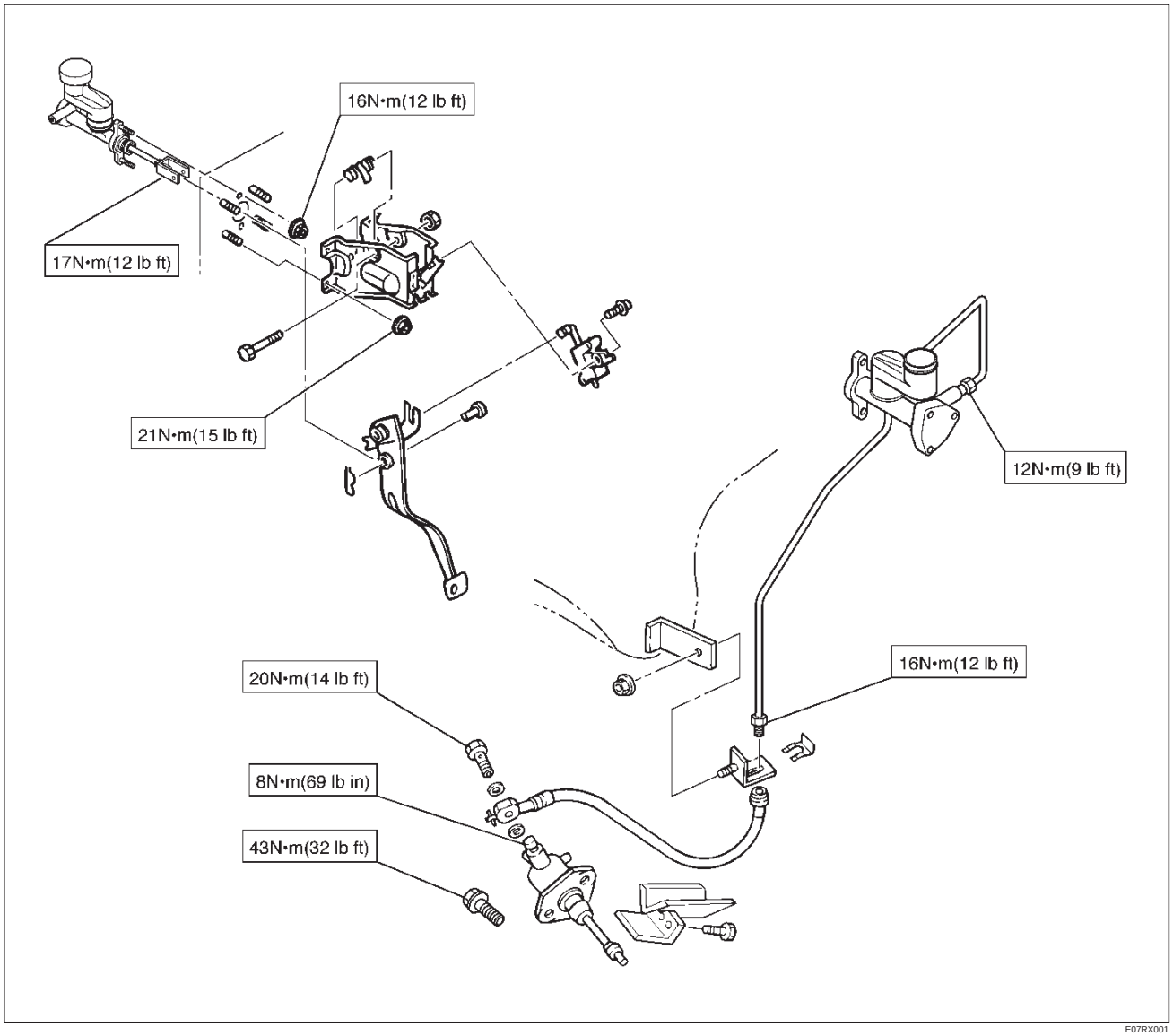

E07RX001

Downloaded from www.Manualslib.com manuals search engine

Special Tools

ILLUSTRATION	**TOOL NO.** TOOL NAME
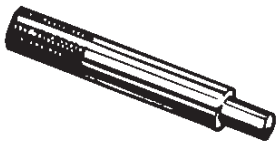 901RS265	**J-24547** Driven plate aligner
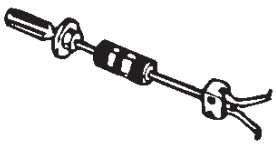 901RS266	**J-5822 and J-23907** Pilot bearing remover and Sliding hammer
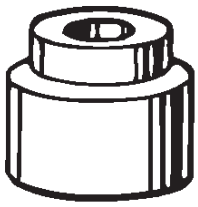 901RS267	**J-26516-A** Crankshaft pilot bearing installer
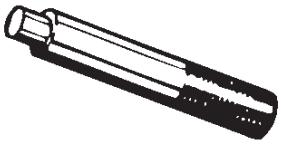 901RS268	**J-8092** Driver handle

Downloaded from www.Manualslib.com manuals search engine

TROOPER

BODY AND ACCESSORIES

LIGHTING SYSTEM

CONTENTS

Service Precaution 8A–2
Headlight Bulb 8A–2
Removal 8A–2
Installation 8A–2
Headlight 8A–3
Headlight and Associated Parts 8A–3
Removal 8A–3
Installation 8A–3
Headlight Adjustment 8A–3
Fog Light Bulb 8A–4
Removal 8A–4
Installation 8A–4
Fog Light Assembly 8A–5
Removal 8A–5
Installation 8A–5
Fog Light Adjustment 8A–5
Front Side Marker Light Bulb 8A–5
Removal 8A–5
Installation 8A–5
Parking Light Bulb 8A–6
Removal and Installation 8A–6
Taillight Bulb 8A–6
Removal 8A–6
Installation 8A–6
License Plate Light Bulb 8A–7
Removal 8A–7
Installation 8A–7
Stoplight Bulb 8A–7
Removal and Installation 8A–7
High Mount Stoplight 8A–7
Removal 8A–7
Installation 8A–8
Front Turn Signal Light Bulb 8A–8
Removal 8A–8
Installation 8A–8
Rear Turn Signal Light Bulb 8A–9
Removal 8A–9
Installation 8A–9
Cornering Light Bulb 8A–9
Removal 8A–9
Installation 8A–9
Backup Light Bulb 8A–10
Removal 8A–10
Installation 8A–10
Dome Light Bulb 8A–10
Removal 8A–10
Installation 8A–10
Luggage Room Light Bulb 8A–11
Removal 8A–11
Installation 8A–11
Courtesy Light Bulb 8A–11
Removal 8A–11
Installation 8A–11
Map Light Switch/Bulb 8A–12
Removal 8A–12
Installation 8A–12
Cigarette Lighter Illumination Bulb 8A–12
Removal 8A–12
Installation 8A–12
Ashtray Illumination Bulb 8A–13
Removal 8A–13
Installation 8A–13
Glove Box Illumination Bulb 8A–13
Removal 8A–13
Installation 8A–13
Vanity Mirror Illumination Bulb 8A–14
Removal 8A–14
Installation 8A–14
Starter Switch 8A–14
Removal 8A–14
Installation 8A–15
Lighting Switch (Combination Switch) 8A–15
Removal 8A–15
Installation 8A–16
Fog Light Switch 8A–16
Removal 8A–16
Installation 8A–17
Stoplight Switch (W/O Cruise Control) 8A–17
Removal 8A–17
Installation 8A–17
Brake Switch (W/Cruise Control) 8A–18
Removal 8A–18
Installation 8A–18
Turn Signal Switch/Cornering Light Switch (Combination Switch) 8A–18
Removal and Installation 8A–18
Hazard Warning Switch 8A–18
Removal 8A–18

Downloaded from www.Manualslib.com manuals search engine

Installation 8A–19
Tailgate Switch 8A–19
Removal 8A–19
Installation 8A–19
Door Switch 8A–20
Removal 8A–20
Installation 8A–20
Rear Defogger Switch 8A–20
Removal 8A–20
Installation 8A–21
Seat Heater Switch 8A–21
Removal 8A–21
Installation 8A–21
Key Remind Switch (Starter Switch) 8A–21
Removal and Installation 8A–21
Illumination Controller 8A–22
Removal 8A–22
Installation 8A–22
Main Data and Specifications 8A–23

Service Precaution

WARNING: THIS VEHICLE HAS A SUPPLEMENTAL RESTRAINT SYSTEM (SRS). REFER TO THE SRS COMPONENT AND WIRING LOCATION VIEW IN ORDER TO DETERMINE WHETHER YOU ARE PERFORMING SERVICE ON OR NEAR THE SRS COMPONENTS OR THE SRS WIRING. WHEN YOU ARE PERFORMING SERVICE ON OR NEAR THE SRS COMPONENTS OR THE SRS WIRING, REFER TO THE SRS SERVICE INFORMATION. FAILURE TO FOLLOW WARNINGS COULD RESULT IN POSSIBLE AIR BAG DEPLOYMENT, PERSONAL INJURY, OR OTHERWISE UNNEEDED SRS SYSTEM REPAIRS.

CAUTION: Always use the correct fastener in the proper location. When you replace a fastener, use ONLY the exact part number for that application. ISUZU will call out those fasteners that require a replacement after removal. ISUZU will also call out the fasteners that require thread lockers or thread sealant. UNLESS OTHERWISE SPECIFIED, do not use supplemental coatings (Paints, greases, or other corrosion inhibitors) on threaded fasteners or fastener joint interfaces. Generally, such coatings adversely affect the fastener torque and the joint clamping force, and may damage the fastener. When you install fasteners, use the correct tightening sequence and specifications. Following these instructions can help you avoid damage to parts and systems.

Headlight Bulb

Removal

1. Disconnect the battery ground cable.
2. Disconnect the connector.
3. Remove the cap(1) while turning it counter clockwise.
4. Pull the bulb(2) out from the headlight body.

CAUTION: The halogen bulb develops a very high temperature. Do not touch the glass portion. If any stain is on the glass surface, It will scorch and the glass will be damaged.

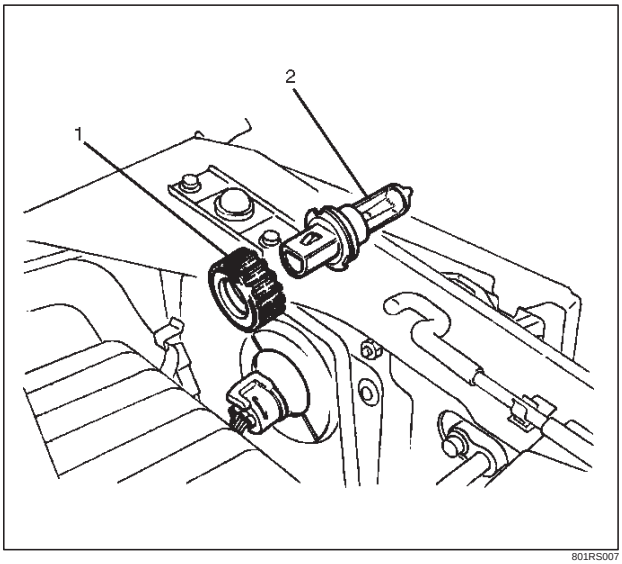

801RS007

Installation

To install, follow the removal steps in the reverse order.

Downloaded from www.Manualslib.com manuals search engine

Headlight

Headlight and Associated Parts

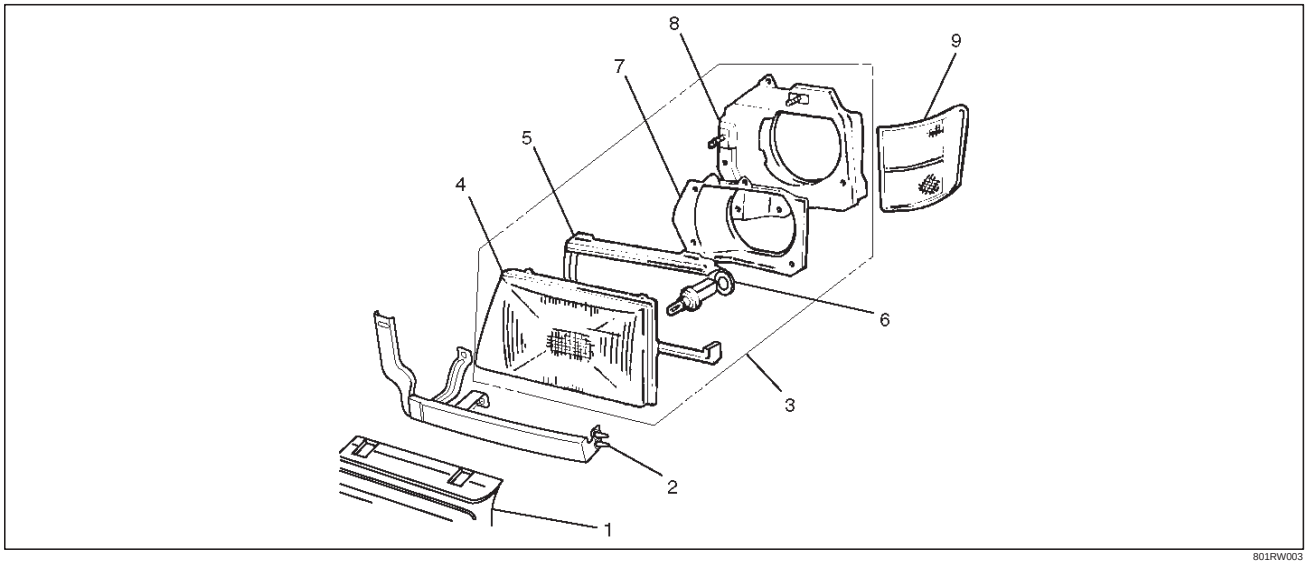

801RW003

Legend

(1) Radiator Grille
(2) Front End Lower Panel
(3) Headlight Assembly
(4) Headlight
(5) Headlight Rim
(6) Headlight Bulb
(7) Rear Cover
(8) Bracket
(9) Front Combination Light

Removal

1. Disconnect the battery ground cable.
2. Remove the screw and pull out the two projecting portions on the fender to remove the front combination light.
3. Remove five clips and two screws to remove the radiator grille.
4. Remove two screws to remove the front end lower panel(2).
5. Remove two bolts and two nuts to remove the headlight assembly (with bracket).
6. Remove the headlight bulb.
7. Remove two screws, two nuts and the spring for the headlight aim adjustment to remove the bracket.
8. Remove four screws to remove the rear cover.
9. Remove the headlight rim.
10. Remove the headlight.

Installation

To install, follow the removal steps in the reverse order.

CAUTION: After installing the headlight, be sure to adjust the headlight aim.

Headlight Adjustment

Preparation

Place the unloaded vehicle on a level surface and check to see if the inflation pressure of the tires is correct, the lenses are clean, and the battery is sufficiently charged. Adjust the aim with the headlight tester, if necessary. When adjusting, follow the procedure of the tester manufacturer's.

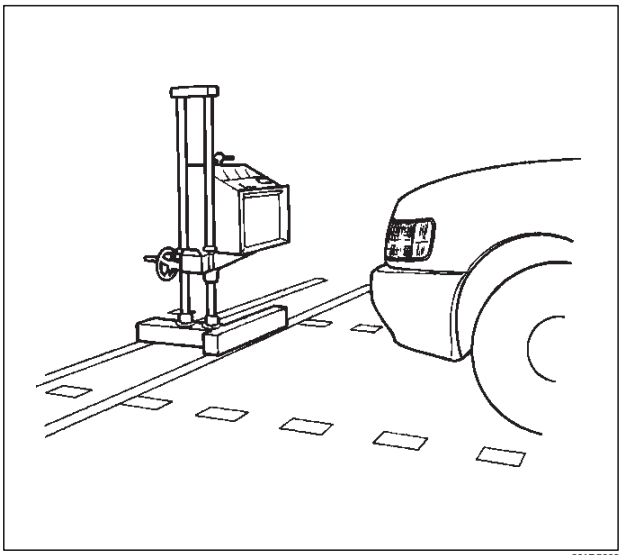

801RS009

Downloaded from www.Manualslib.com manuals search engine

Vertical adjustment

Use a screwdriver for vertical adjustment.

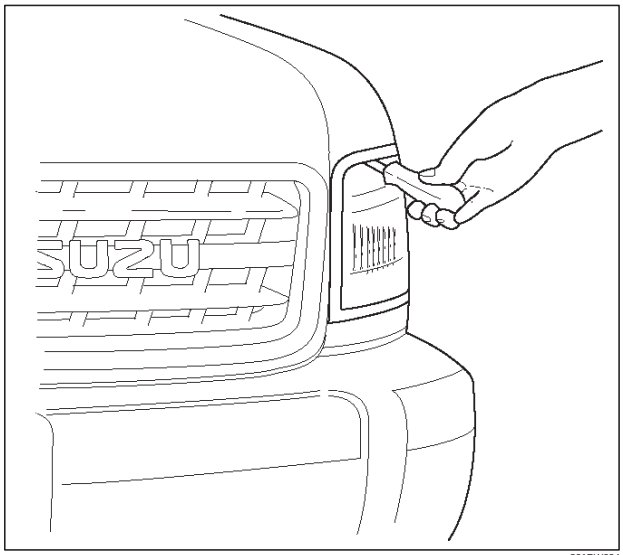

801RW004

Horizontal adjustment

Use a screwdriver for horizontal adjustment.

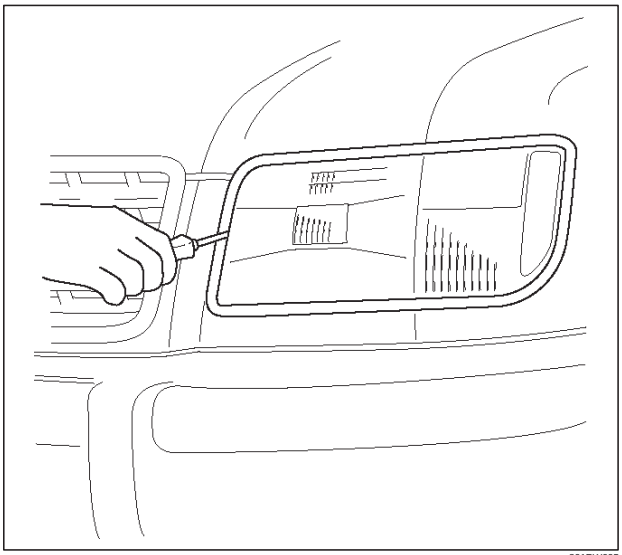

801RW005

Fog Light Bulb

Removal

1. Disconnect the battery ground cable.
2. Open the rear cover(1) of the case.
3. Remove the dust cover.
4. Disconnect the bulb connector.
5. Remove the clip(3).
6. Remove the fog light bulb(2).

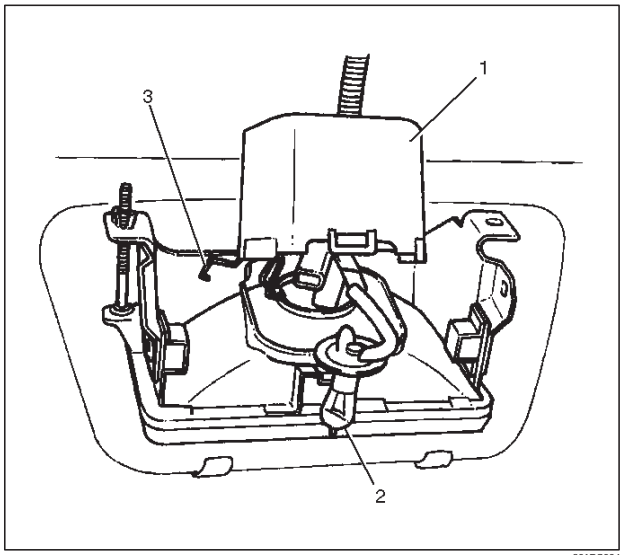

801RS004

Installation

1. Install the fog light bulb(2).
2. Install the clip(3).
3. Connect the bulb connector.
4. Install the dust cover.
5. Close the rear cover(1) of the case.

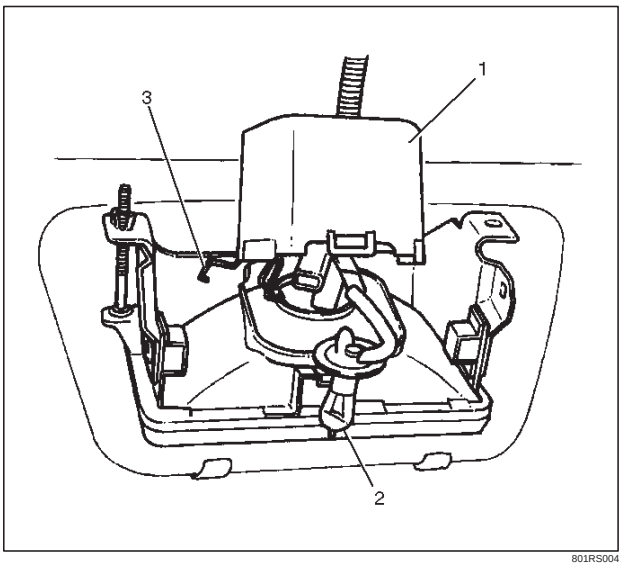

801RS004

6. Connect the battery ground cable.

Downloaded from www.Manualslib.com manuals search engine

Fog Light Assembly

Removal

1. Disconnect the battery ground cable.
2. Remove two nuts from the bracket.
3. Disconnect the connector.
4. Remove the fog light assembly(1).

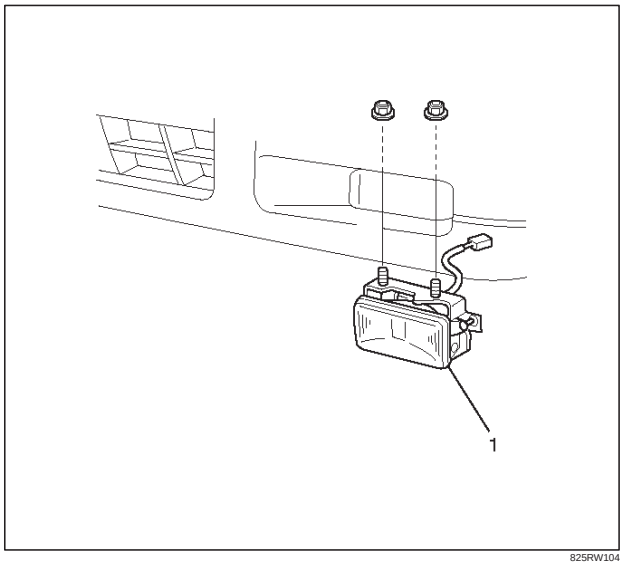

825RW104

CAUTION: After installing the fog light, be sure to adjust the fog light aim.

Fog Light Adjustment

Turn the adjusting screw with a screwdriver to adjust the aim of the fog light vertically.

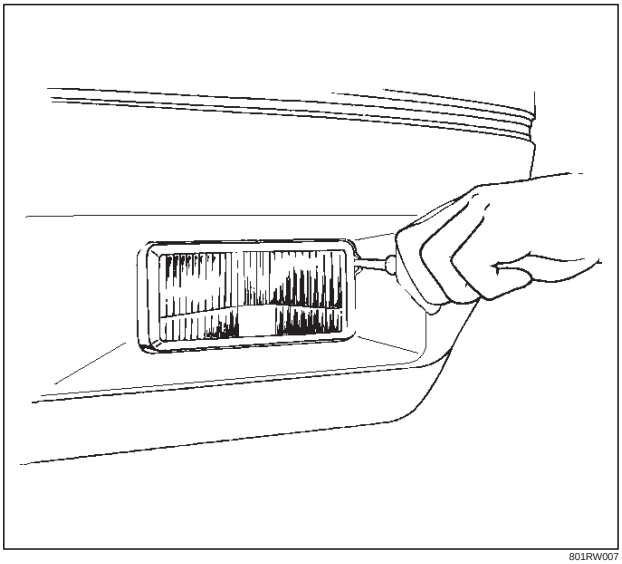

801RW007

Installation

To install, follow the removal steps in the reverse order.

Front Side Marker Light Bulb

Removal

1. Disconnect the battery ground cable.
2. Remove the screw at the upper portion of the light bracket and then remove the bracket from the fender.
3. Remove the front combination light assembly(1).
4. Remove the front side marker light socket(2) by turning it counterclockwise.
5. Pull out the bulb(3) from the socket.

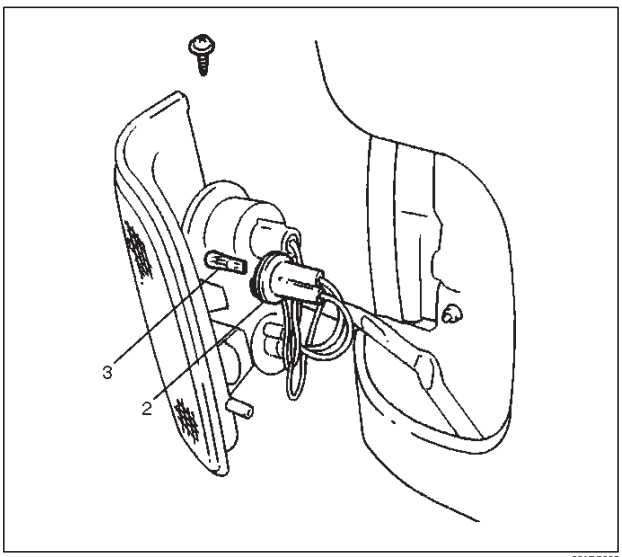

801RS003

Installation

To install, follow the removal steps in the reverse order.

Downloaded from www.Manualslib.com manuals search engine

Parking Light Bulb

Removal and Installation

Refer to the Front Turn Signal Light Bulb in this section.

Taillight Bulb

Removal

1. Disconnect the battery ground cable.
2. Remove three screws and release locks at two locations to remove the rear combination light assembly(2).
3. Remove the socket(3) by turning it counterclockwise.
4. Turn the bulb(1) counterclockwise while pushing it to remove it from the socket.

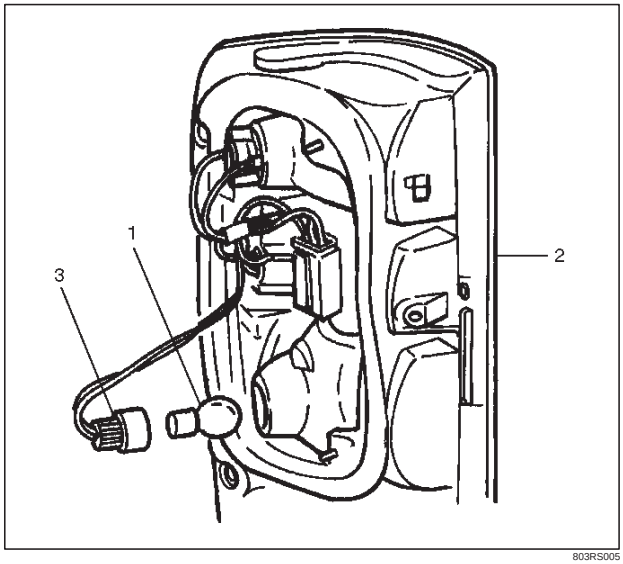

803RS005

Installation

To install, follow the removal steps in the reverse order.

Downloaded from www.Manualslib.com manuals search engine

License Plate Light Bulb

Removal

1. Disconnect the battery ground cable.
2. Remove two screws to remove the lens(2).
3. Pull out the bulb(1) from the socket.

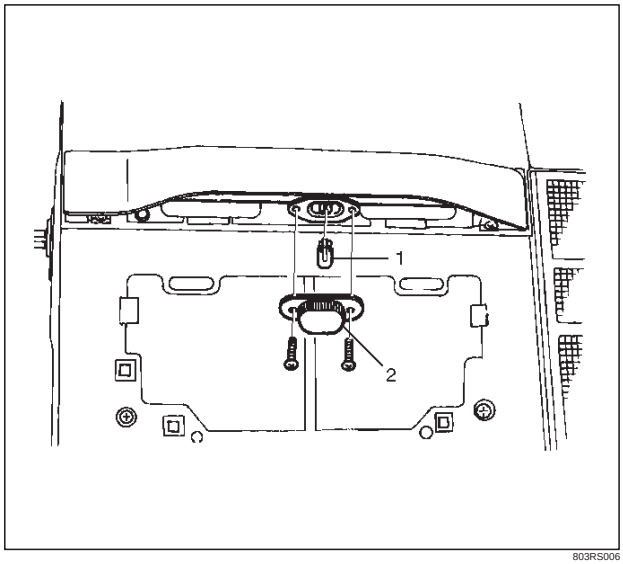

803RS006

Installation

To install, follow the removal steps in the reverse order.

Stoplight Bulb

Removal and Installation

Refer to the Taillight Bulb in this section.

High Mount Stoplight

Removal

1. Disconnect the battery ground cable.
2. Remove the clips(2).
3. Pull out the high mount stoplight(1).
4. Remove the connector.
5. Remove the high mount stoplight.

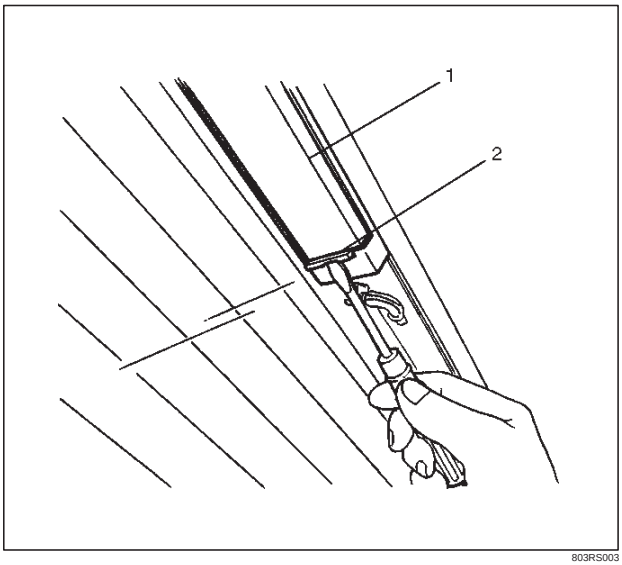

803RS003

Downloaded from www.Manualslib.com manuals search engine

Installation

1. Insert the clips(1)(3) into the high mount stoplight(2).
2. Reconnect the connector.
3. Install the high mount stoplight.

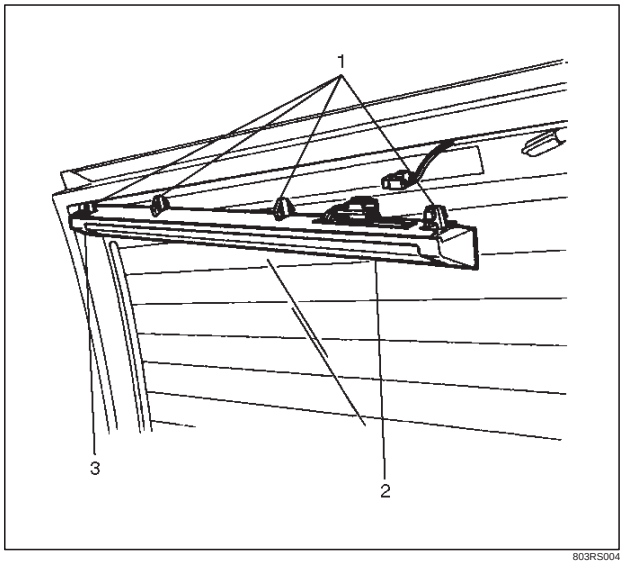

803RS004

Front Turn Signal Light Bulb

Removal

1. Disconnect the battery ground cable.
2. Remove the screw at the upper portion of the light bracket, and remove the bracket from the fender.
3. Remove the front combination light(1).
4. Remove the turn signal light socket(3) by turning it counterclockwise.
5. Remove the bulb(2) by turning it counterclockwise while pushing it at the same time.

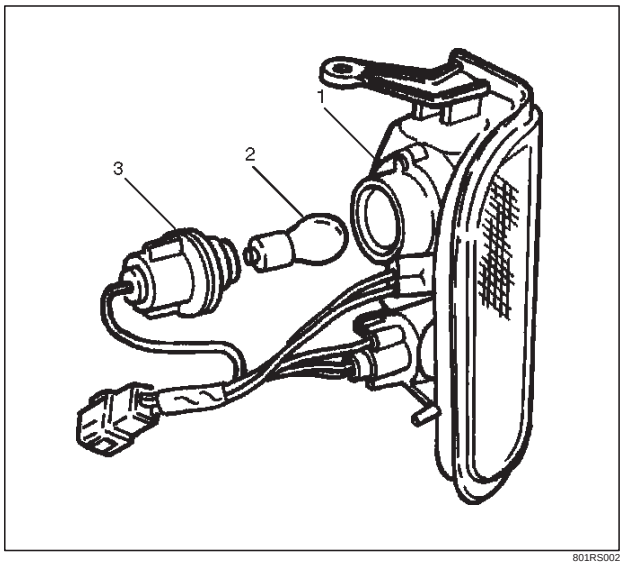

801RS002

Installation

To install, follow the removal steps in the reverse order.

Downloaded from www.Manualslib.com manuals search engine

Rear Turn Signal Light Bulb

Removal

1. Disconnect the battery ground cable.
2. Remove the three screws and release the lock at two positions.
3. Remove the rear combination light(3).
4. Remove the turn signal light socket/bulb(1) by turning it counterclockwise.
5. Remove the bulb(2) by turning it counterclockwise while pushing it at the same time.

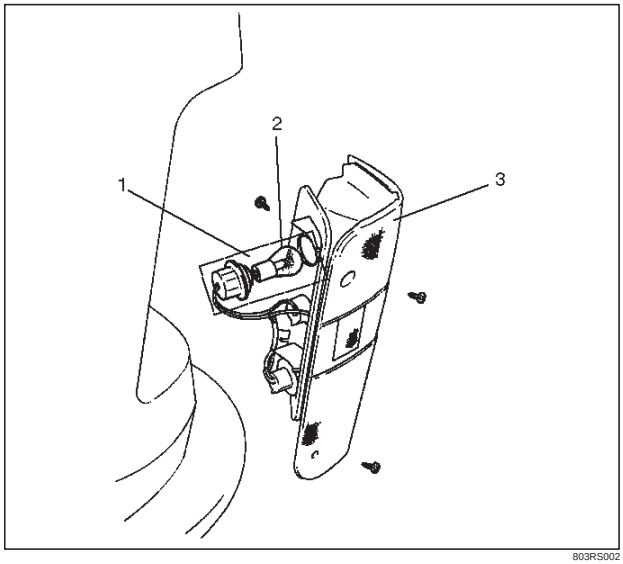

803RS002

Installation

To install, follow the removal steps in the reverse order.

Cornering Light Bulb

Removal

1. Disconnect the battery ground cable.
2. Remove the screws at the upper portion of the light bracket, and remove the bracket from the fender.
3. Remove the front combination light(1).
4. Remove the cornering light bulb socket(3) by turning it counterclockwise.
5. Remove the bulb(2) by turning it counterclockwise while pushing it at the same time.

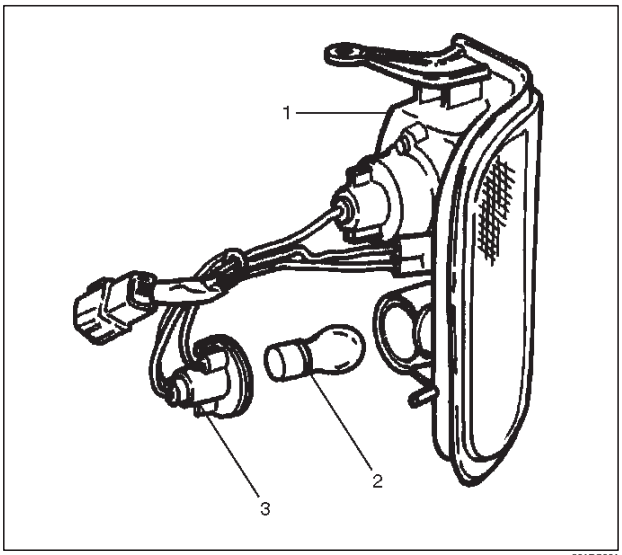

801RS001

Installation

To install, follow the removal steps in the reverse order.

Downloaded from www.Manualslib.com manuals search engine

Backup Light Bulb

Removal

1. Disconnect the battery ground cable.
2. Remove three screws and release the lock at two positions.
3. Remove the rear combination light(3).
4. Remove the backup light socket/bulb(1) by turning it counterclockwise.
5. Remove the bulb(2) by turning it counterclockwise while pushing it at the same time.

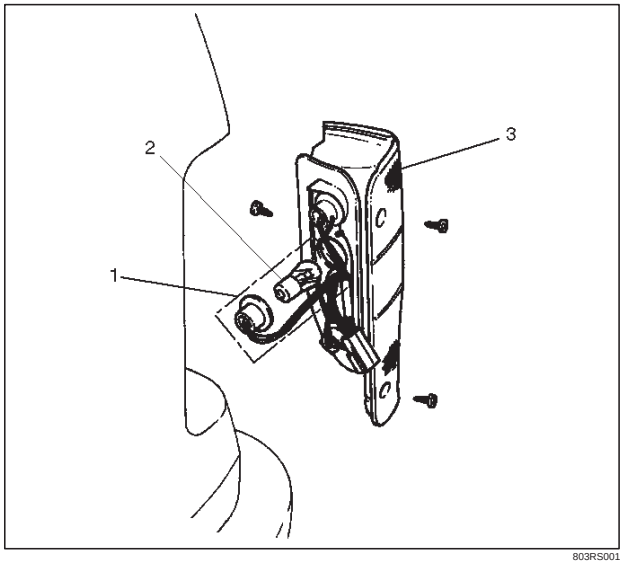

803RS001

Installation

To install, follow the removal steps in the reverse order.

Dome Light Bulb

Removal

1. Disconnect the battery ground cable.
2. Remove the lens(2) by releasing the locks at three locations.
3. Remove the bulb(1).

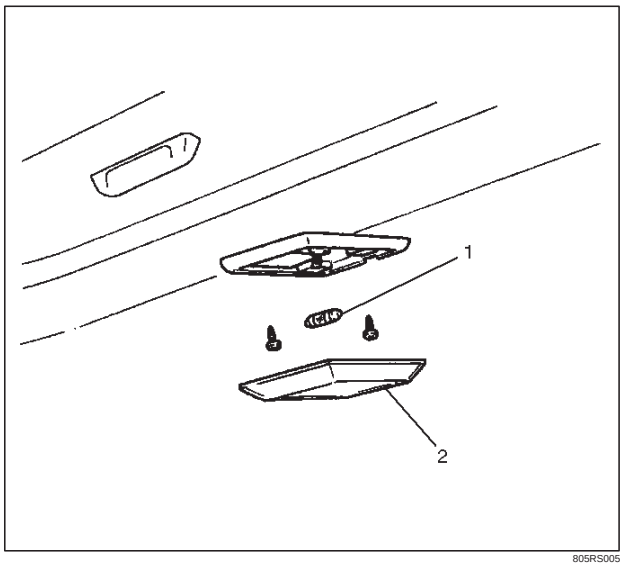

805RS005

Installation

To install, follow the removal steps in the reverse order.

Downloaded from www.Manualslib.com manuals search engine

Luggage Room Light Bulb

Removal

1. Disconnect the battery ground cable.
2. Remove the lens(2) by releasing the locks at four locations.
3. Remove the bulb(1).

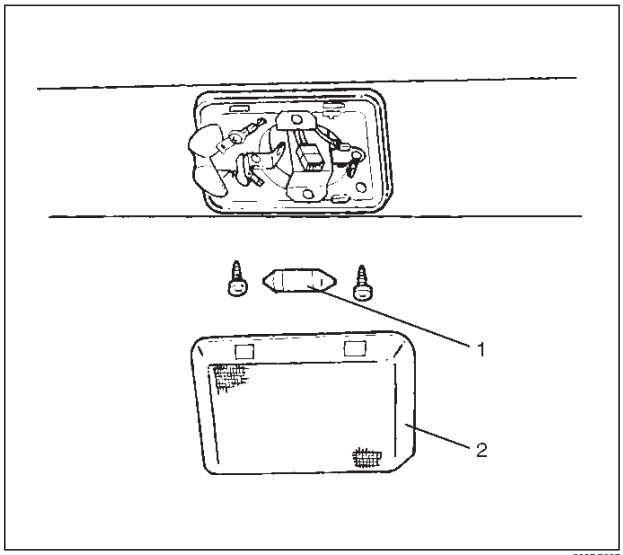

803RS007

Installation

To install, follow the removal steps in the reverse order.

Courtesy Light Bulb

Removal

1. Disconnect the battery ground cable.
2. Remove two screws to remove the lens(1).
3. Pull out the bulb(2) from the socket.

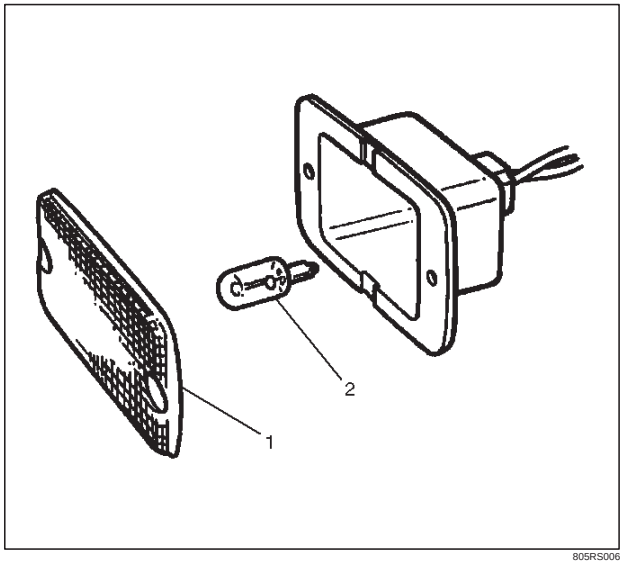

805RS006

Installation

To install, follow the removal steps in the reverse order.

Downloaded from www.Manualslib.com manuals search engine

Map Light Switch/Bulb

Removal

1. Disconnect the battery ground cable.
2. Pull the map light body downward to release the lock.
3. Disconnect the connectors of the map light and the sun roof switch.
4. Remove the map light switch.
5. Turn the socket counterclockwise to remove it.
6. Pull out the bulb from the socket.

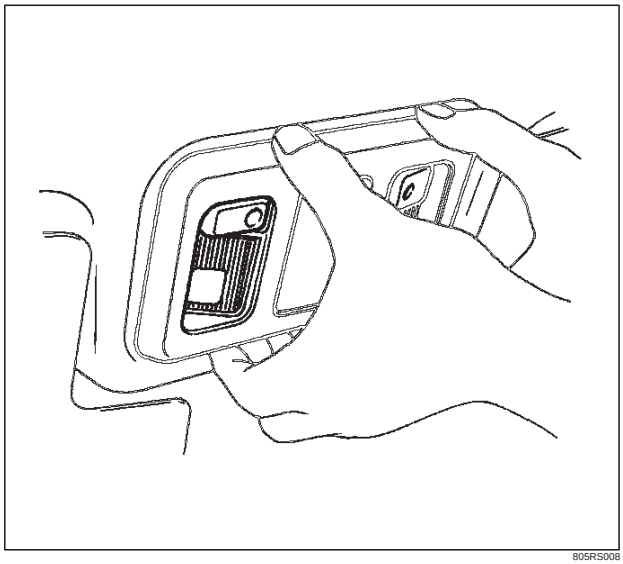

805RS008

Installation

To install, follow the removal steps in the reverse order.

Cigarette Lighter Illumination Bulb

Removal

1. Disconnect the battery ground cable.
2. Remove eight screws to remove the instrument cluster panel(2).
3. Turn the socket counterclockwise to remove it then pull out the bulb(1).

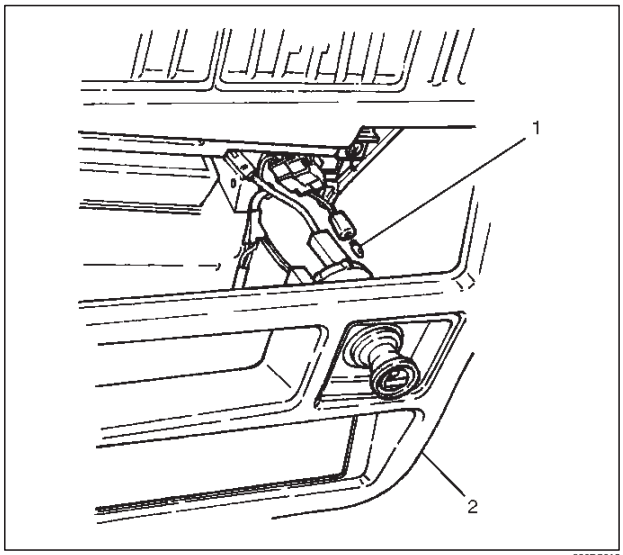

826RS013

Installation

To install, follow the removal steps in the reverse order.

Downloaded from www.Manualslib.com manuals search engine

Ashtray Illumination Bulb

Removal

1. Disconnect the battery ground cable.
2. Removal eight screws to remove the instrument cluster panel(1).
3. Remove the ashtray(5).
4. Remove four screws to remove the audio box(4).
5. Remove two screws to remove the ashtray guide(2).
6. Turn the socket counterclockwise to remove it then pull out the bulb(3).

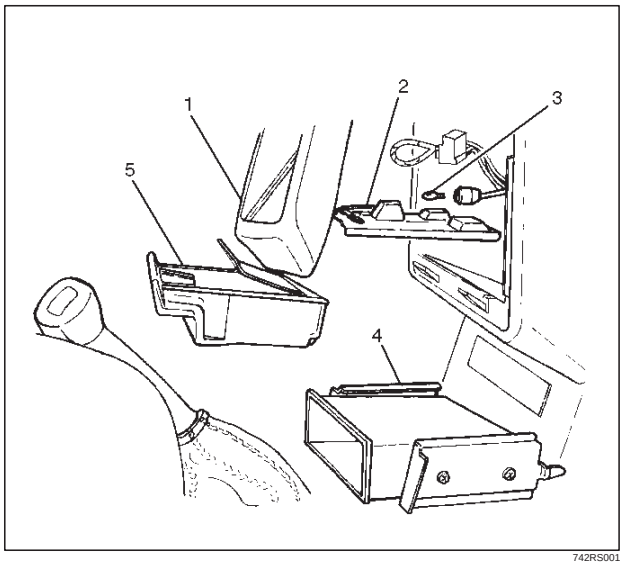

742RS001

Installation

To install, follow the removal steps in the reverse order.

Glove Box Illumination Bulb

Removal

1. Disconnect the battery ground cable.
2. Open the glove box lid, and then pull out the bulb(1).

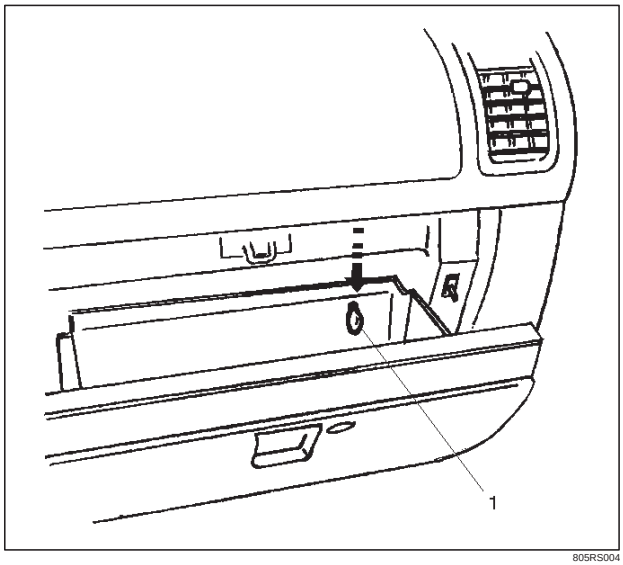

805RS004

Installation

To install, follow the removal steps in the reverse order.

Downloaded from www.Manualslib.com manuals search engine

Vanity Mirror Illumination Bulb

Removal

1. Disconnect the battery ground cable.
2. Remove the lens(2).
3. Remove the bulb(1).

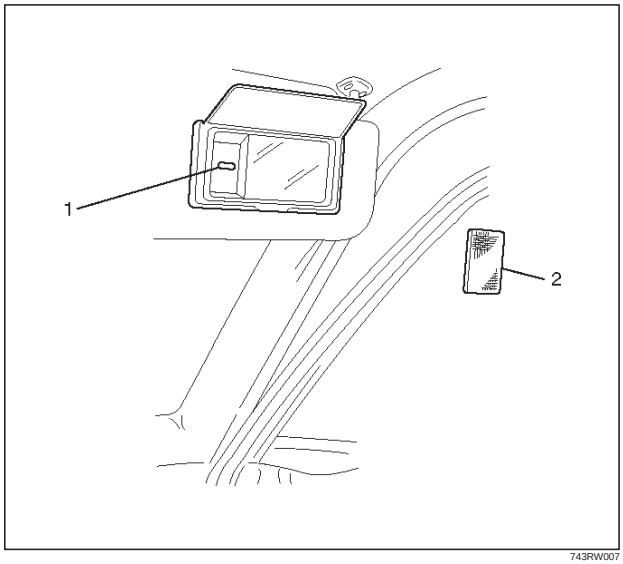

743RW007

Installation

To install, follow the removal steps in the reverse order.

Starter Switch

Removal

1. Disconnect the battery ground cable.
2. Remove the front console assembly(1).
   Refer to Instrument Panel Assembly in Body Structure section.
3. Remove the lower cluster assembly(2).
   Refer to the Instrument Panel Assembly in Body Structure section.
4. Remove the instrument panel driver lower cover assembly(3).
   Refer to the Instrument Panel Assembly in Body Structure section.

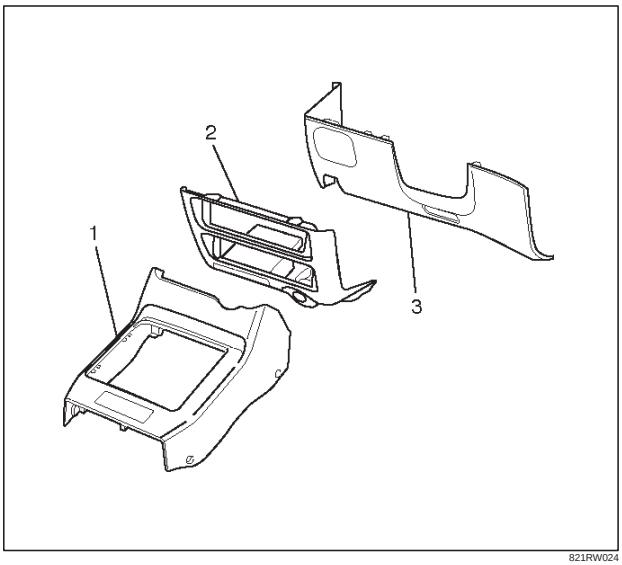

821RW024

5. Remove seven screws to remove the steering cowl(6).
6. Disconnect the connector, remove the screw(4) and then remove the starter switch(5).

Downloaded from www.Manualslib.com manuals search engine

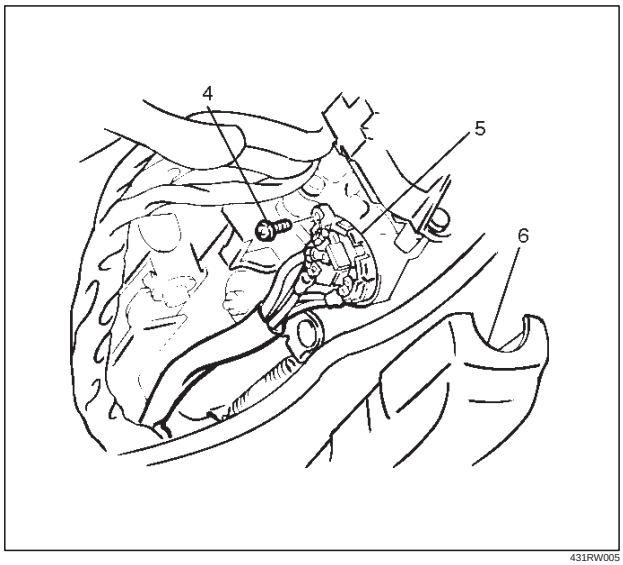

431RW005

Installation

To install, follow the removal steps in the reverse order noting the following point.

1. When installing the steering cowl(10), be sure to pass the harnesses through the route as shown in the figure so that the starter switch harness(7), the combination switch harness(8) and the inflator module harness(9) will not get caught.

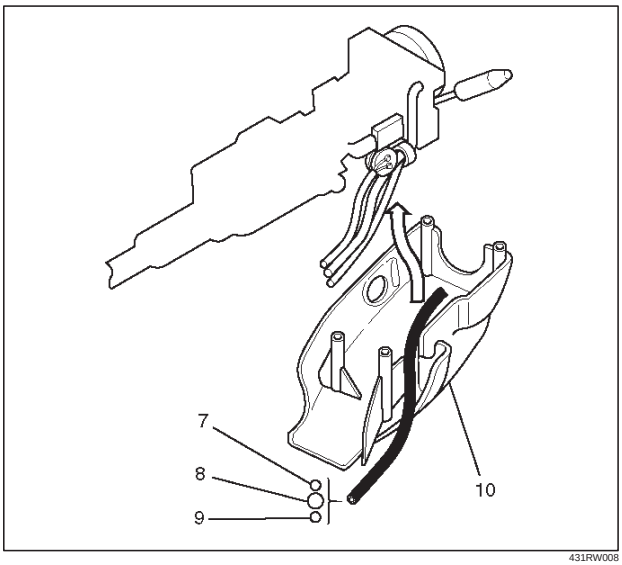

431RW008

Lighting Switch (Combination Switch)

Removal

1. Disconnect the battery ground cable.
2. Remove the instrument panel driver lower cover(5).
   Refer to the Instrument Panel Assembly in Body Structure section.
3. Remove seven screws to remove the steering cowl(4).
4. Disconnect the SDM (air bag controller) connector located at lower of the instrument panel driver lower cover.
5. Remove four fixing screws and disconnect the driver inflator module connector to remove the driver inflator module(3).

CAUTION: When carrying a live inflator module, make sure the bag opening is pointed away from you. In case of an accidental deployment, the bag will then deploy with minimal chance of injury. Never carry the inflator module by the wires or connector on the underside of the module.

When placing a live inflator module on a bench or other surface, always face the bag and trim cover up, away from the surface. This is necessary so that a free space is provided to allow the air bag to expand in the unlikely event of accidental deployment.

6. Remove the steering wheel(2).
   Refer to the Steering Wheel in Steering section.
7. Disconnect the SRS coil assembly connector,remove four fixing screws to remove the SRS coil assembly(1).
8. Disconnect the lighting switch connector, remove four fixing screws to remove the lighting switch(6).

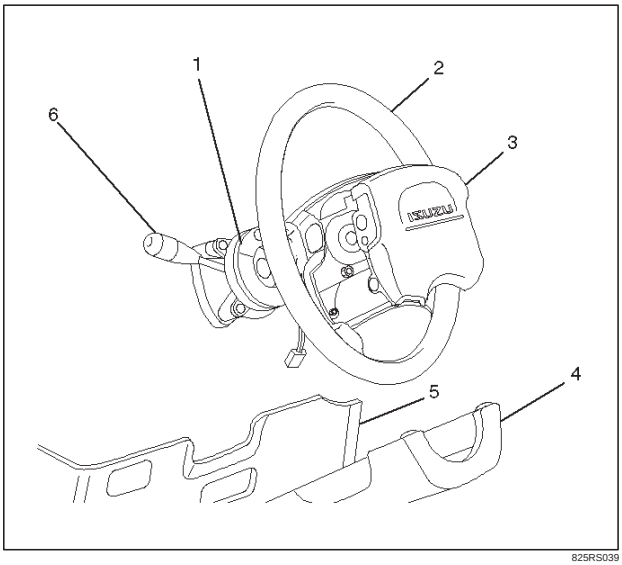

825RS039

Downloaded from www.Manualslib.com manuals search engine

Installation

To install, follow the removal steps in the reverse order, noting the following points.

1. Check to see if the vehicle is in the straight driving condition and turn the rotary section of the SRS coil assembly provided to the upper surface of the lighting switch (combination switch) counterclockwise fully until it stops.
   Then from where it stops, turn it back about 3 rotations to set the alignment marks(7) together before installing the steering wheel.

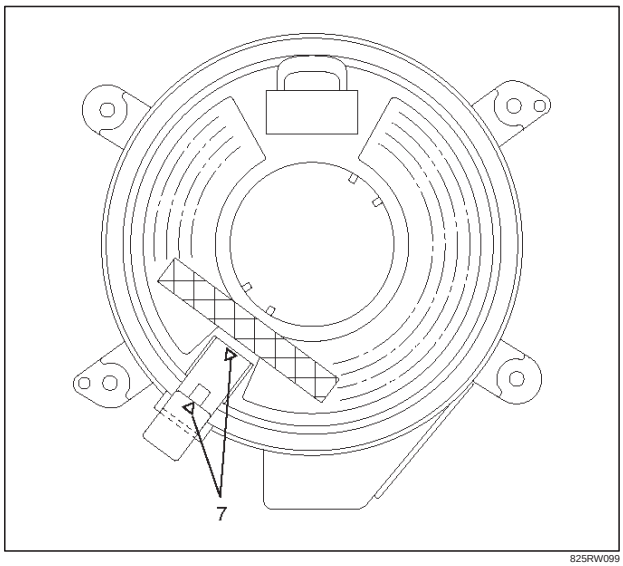

825RW099

2. Tighten the steering shaft nut to the specified torque.
   Torque: 34 N·m (25 lb ft)
3. When connect the double lock type of inflator module connector, insert the connector completely and lock at outside.
   Imperfect locking may cause malfunction of SRS system circuit.
4. When installing the steering cowl(11),be sure to pass the harnesses through the route as shown in the figure so that the starter switch harness(8), the combination switch harness(9) and inflator module harness(10) will not get caught.

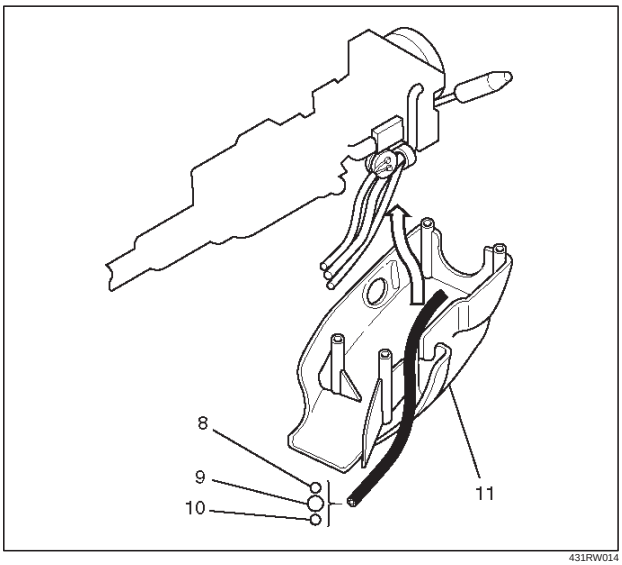

431RW014

Fog Light Switch

Removal

1. Disconnect the battery ground cable.
2. Remove the front console assembly(1).
   Refer to the Instrument Panel Assembly in Body Structure section.
3. Remove the lower cluster assembly(2).
   Refer to the Instrument Panel Assembly in Body Structure section.
4. Remove the instrument panel driver lower cover assembly(3).
   Refer to the Instrument Panel Assembly in Body Structure section.

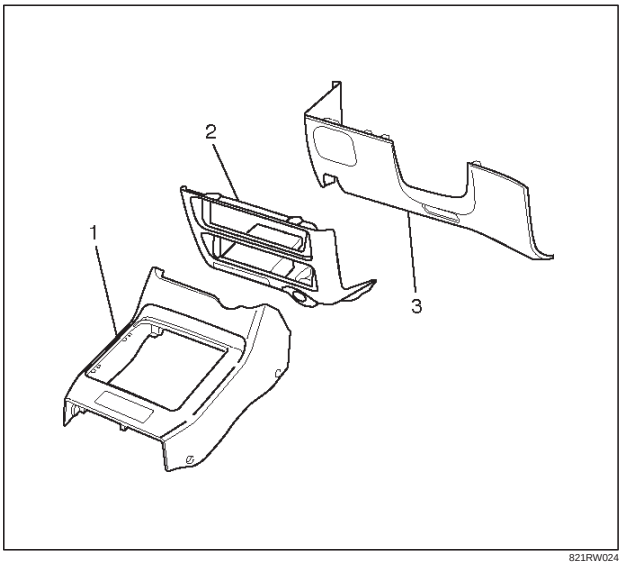

821RW024

Downloaded from www.Manualslib.com manuals search engine

5. Remove the instrument panel cluster assembly(4). Refer to the Instrument Panel Assembly in Body Structure section.
6. Disconnect the connector and push the lock from the back side of the instrument panel cluster assembly to remove the fog light switch(5).

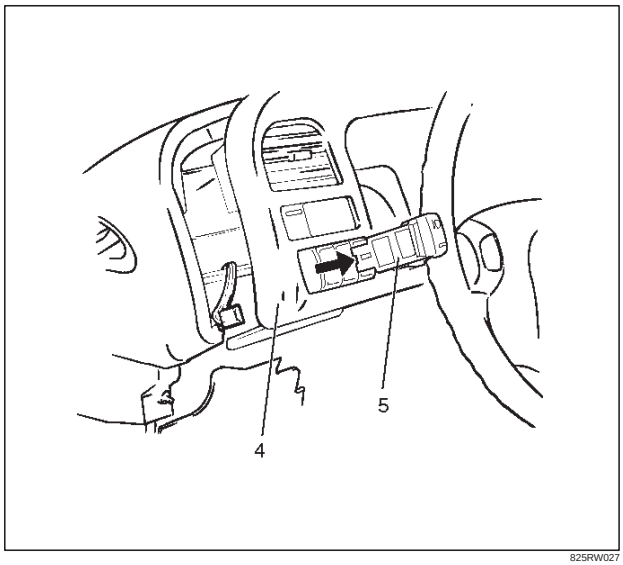

825RW027

Installation

To install, follow the removal steps in the reverse order, noting the following point:

1. Push in the switch with your fingers until the switch is locked securely.

Stoplight Switch (W/O Cruise Control)

Removal

1. Disconnect the battery ground cable.
2. Disconnect the connector(3), loosen the lock nut(1) and then remove the stoplight switch(2) by turning it.

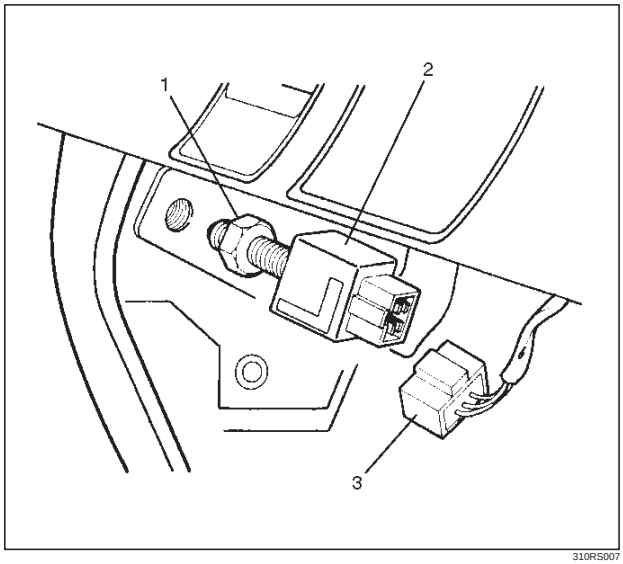

310RS007

Installation

To install, follow the removal steps in the reverse order, noting the following points.

1. Check to see if the brake pedal has been returned by the return spring to the specified position.
2. Turn the stoplight switch(1) clockwise until the tip of the threaded portion of the switch contacts the pedal arm(2).
3. Turn the switch counterclockwise until the space between the tip of the threaded portion and the pedal arm is 0.5 to 1.0 mm (0.02 – 0.04 in.).

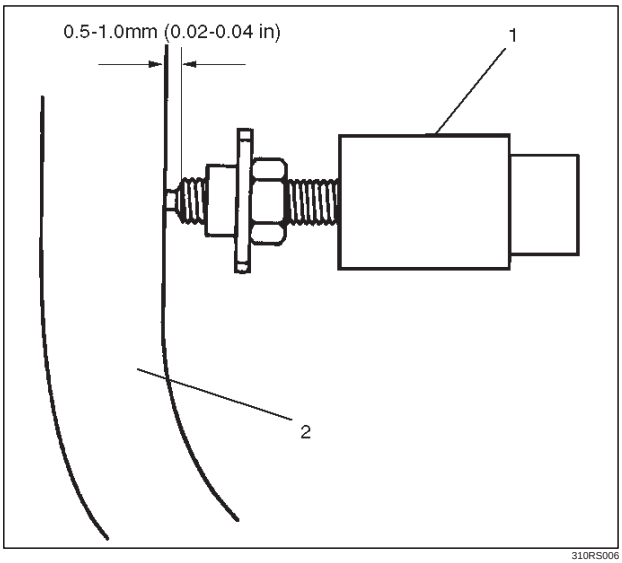

310RS006

Downloaded from www.Manualslib.com manuals search engine

Brake Switch (W/Cruise Control)

Removal

1. Disconnect the battery ground cable.
2. Disconnect the connector(1), loosen the lock nut(3) and then remove the brake switch(2) by turning it.

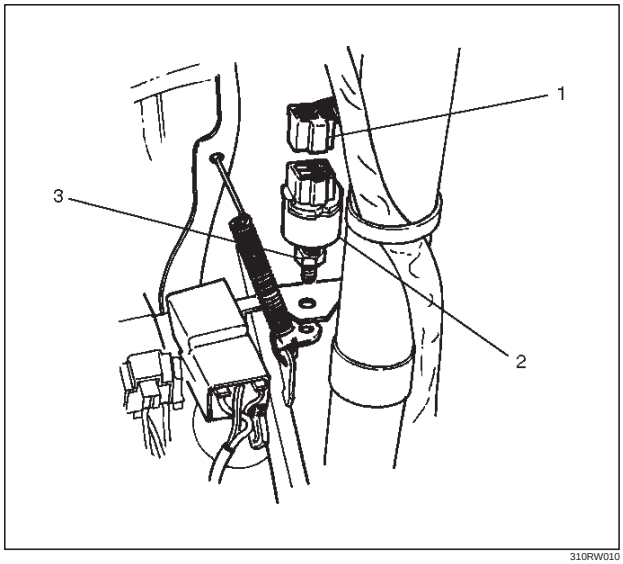

310RW010

Installation

To install, follow the removal steps in the reverse order, noting the following points.

1. Check to see if the brake pedal has been returned by the return spring to the specified position.
2. Turn the switch clockwise until the tip of the threaded portion of the brake switch contacts the pedal arm.
3. Turn the switch counterclockwise until the space between the tip of the threaded portion and the pedal arm is 0.5 to 1.0 mm (0.02 – 0.04 in.).

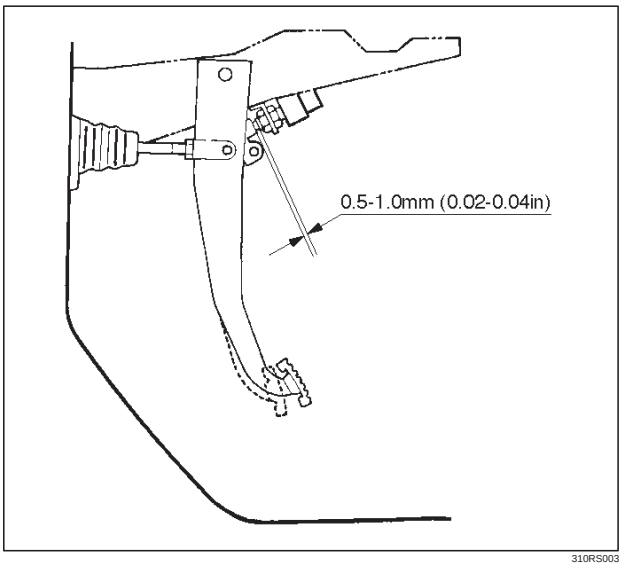

310RS003

Turn Signal Switch/Cornering Light Switch (Combination Switch)

Removal and Installation

Refer to the removal and installation steps of the Lighting Switch (Combination Switch) in this section.

Hazard Warning Switch

Removal

1. Disconnect the battery ground cable.
2. Remove the front console assembly(1).
   Refer to the Instrument Panel Assembly in Body Structure section.
3. Remove the lower cluster assembly(2).
   Refer to the Instrument Panel Assembly in Body Structure section.
4. Remove the instrument panel driver lower cover assembly(3).
   Refer to the Instrument Panel Assembly in Body Structure section.

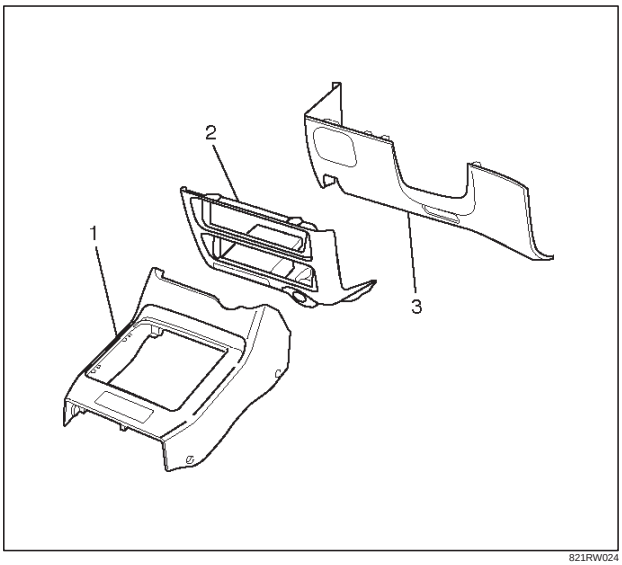

821RW024

Downloaded from www.Manualslib.com manuals search engine

5. Remove the instrument panel cluster assembly(4). Refer to the Instrument Panel Assembly in Body Structure section.
6. Disconnect the connector and push the lock from the back side of the instrument panel cluster assembly to remove the hazard warning switch(5).

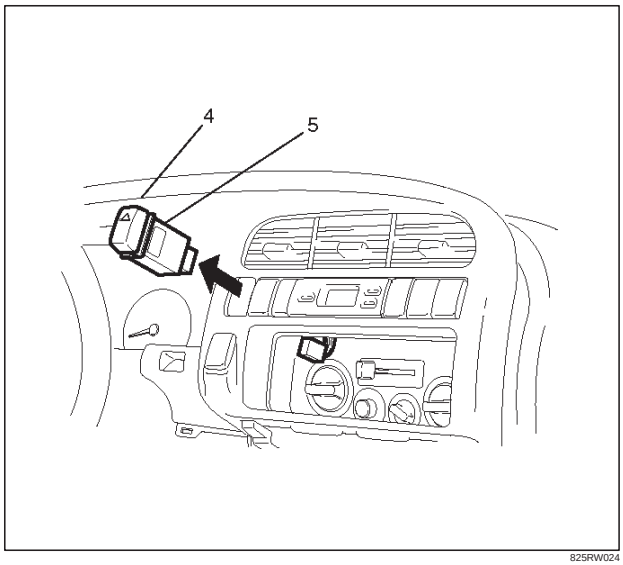

825RW024

Installation

To install, follow the removal steps in the reverse order, noting the following point.

1. Push in the switch with your fingers until it locks securely.

Tailgate Switch

Removal

1. Disconnect the battery ground cable.
2. Remove the screw and disconnect the connector(1) to remove the tailgate switch(2).

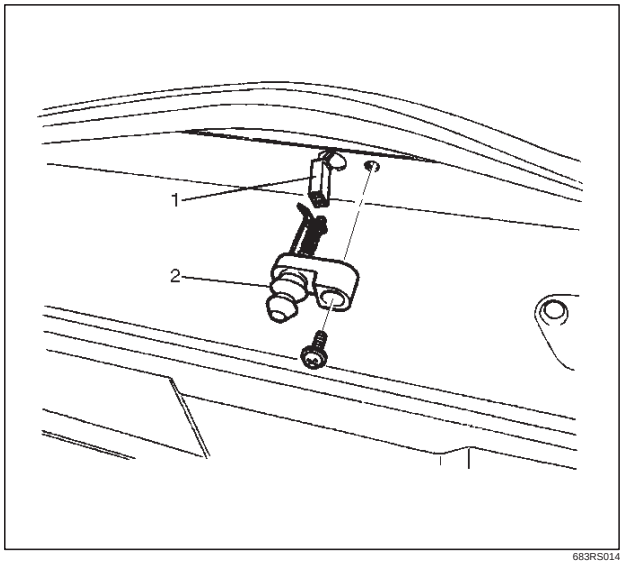

683RS014

Installation

To install, follow the removal steps in the reverse order.

Downloaded from www.Manualslib.com manuals search engine

Door Switch

Removal

1. Disconnect the battery ground cable.
2. Remove the screw and disconnect the connector to remove the door switch(1).

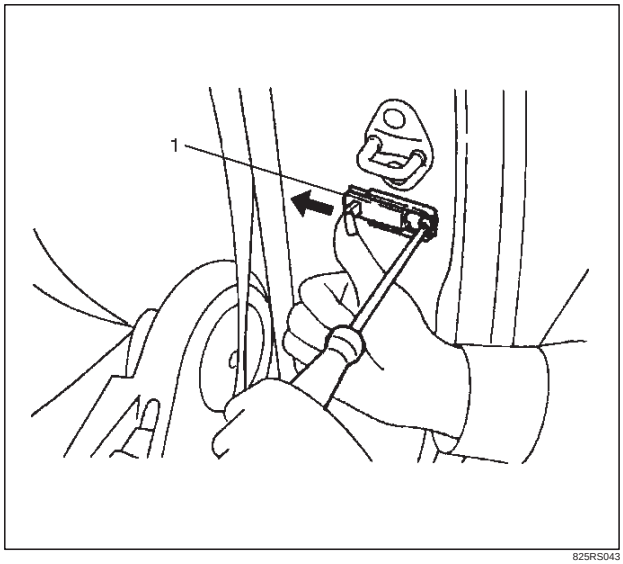

825RS043

Installation

To install, follow the removal steps in the reverse order.

Rear Defogger Switch

Removal

1. Disconnect the battery ground cable.
2. Remove the front console assembly(1).
   Refer to the Instrument Panel Assembly in Body Structure section.
3. Remove the lower cluster assembly(2).
   Refer to the Instrument Panel Assembly in Body Structure section.
4. Remove the instrument panel driver lower cover assembly(3).
   Refer to the Instrument Panel Assembly in Body Structure section.

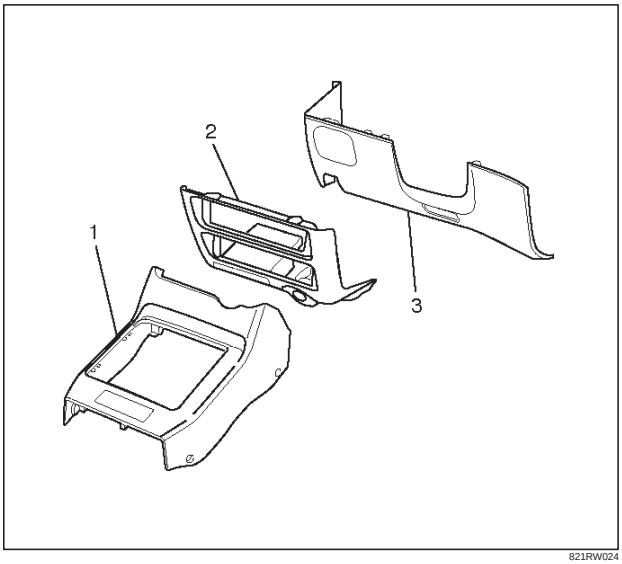

821RW024

5. Remove the instrument panel cluster assembly(4).
   Refer to the Instrument Panel Assembly in Body Structure section.
6. Disconnect the connector and push the lock from the back side of the instrument panel cluster assembly to remove the rear defogger switch(5).

Downloaded from www.Manualslib.com manuals search engine

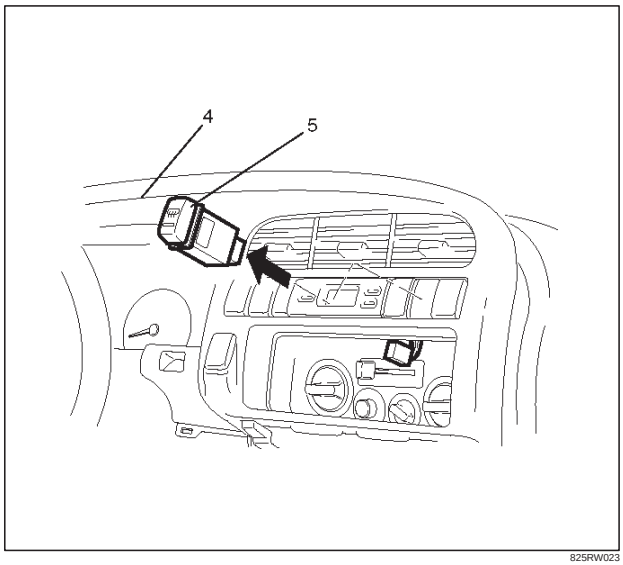

825RW023

Installation

To install, follow the removal steps in the reverse order, noting the following point.

1. Push in the switch with your fingers until it locks securely.

Seat Heater Switch

Removal

1. Disconnect the battery ground cable.
2. Remove four fixing screws and disconnect the switch connectors to remove the front console assembly(4).
3. Push the lock from the back side of the front console assembly to remove the seat heater switch(5).

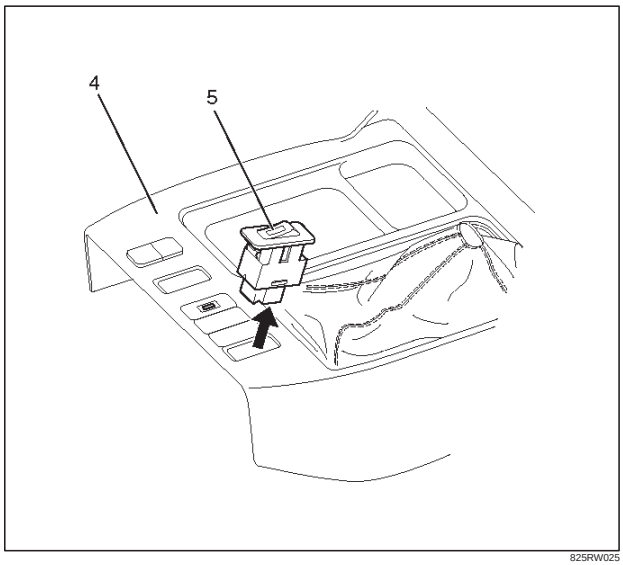

825RW025

Installation

To install, follow the removal steps in the reverse order, noting the following point.

1. Push the switch with your fingers until it locks securely.

Key Remind Switch (Starter Switch)

Removal and Installation

Refer to the removal and installation on steps of the Starter Switch in this section.

Downloaded from www.Manualslib.com manuals search engine

Illumination Controller

Removal

1. Disconnect the battery ground cable.
2. Remove the front console assembly(1).
   Refer to the Instrument Panel Assembly in Body Structure section.
3. Remove the lower cluster assembly(2).
   Refer to the Instrument Panel Assembly in Body Structure section.
4. Remove the instrument panel driver lower cover assembly(3).
   Refer to the Instrument Panel Assembly in Body Structure section.

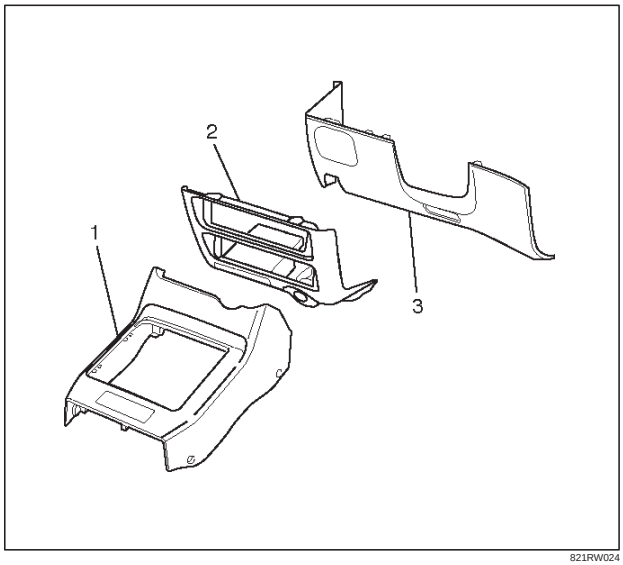

821RW024

5. Remove the instrument panel cluster assembly(4).
   Refer to the Instrument Panel Assembly in Body Structure section.
6. Disconnect the connector and push the lock from the back side of the instrument panel cluster assembly to remove the illumination controller(5).

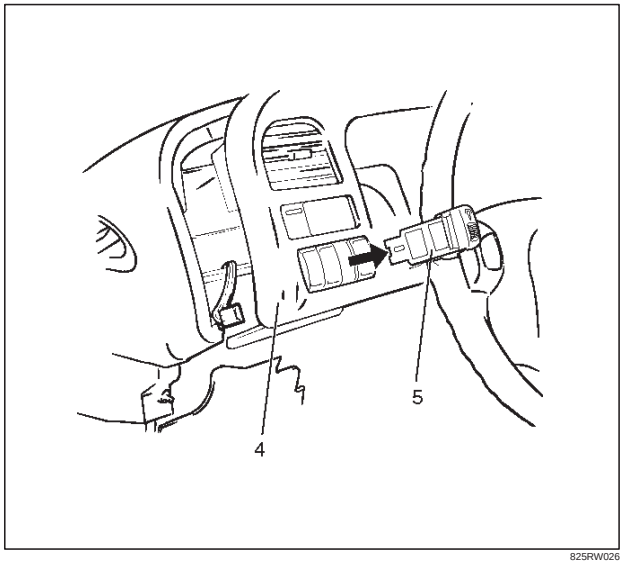

825RW026

Installation

To install, follow the removal steps in the reverse order, noting the following point.

1. Push in the switch with your fingers until the switch is locked securely.

Downloaded from www.Manualslib.com manuals search engine

Main Data and Specifications

Light and Bulb Specifications

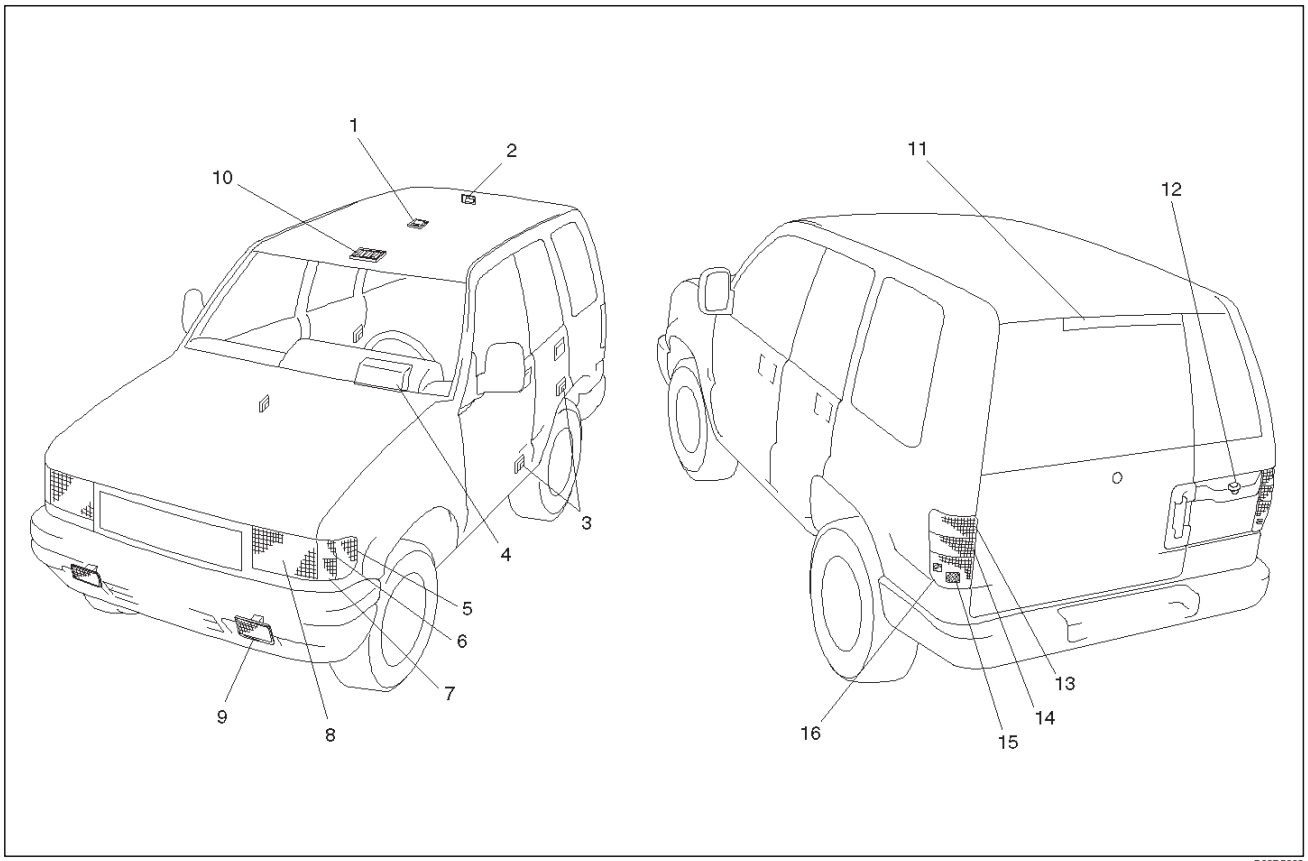

Legend

(1) Dome Light
(2) Luggage Room Light
(3) Courtesy Light
(4) Meter
(5) Side Marker Light
(6) Turn Signal Light/Parking Light
(7) Cornering Light
(8) Headlight
(9) Fog Light
(10) Map Light
(11) High Mount Stoplight
(12) License Plate Light
(13) Turn Signal Light
(14) Backup Light
(15) Taillight/Stoplight
(16) Rear Combination Light

Light Name		Bulb No.	Rated Power	Number of Bulbs	Lens Color	Remarks
Headlight		9004	65W/45W	2	White	Halogen
Front Combination Light	Turn Signal Light/Parking Light	1157	27W/8W	2	White	
	Side Marker Light	194	3.8W	2	Amber	
	Cornering Light	1156	27W	2	White	
Fog Light		—	55W	2	White	Halogen
Rear Combination Light	Taillight/Stoplight	1157	8W/27W	2	Red	
	Turn Signal Light	1156	27W	2	Amber	
	Backup Light	1156	27W	2	White	
High Mount Stoplight		—	—	50	Red	LED

Downloaded from www.Manualslib.com manuals search engine

License Plate Light			—	5W	1	White	
Map Light			—	5W	2	White	
Dome Light			—	10W	1	White	
Luggage Room Light			—	8W	1	White	
Courtesy Light			194	3.8W	4	White	
Indicator / Warning light	Air Conditioning Sw		—	60mA	1		
	RR Defogger Sw		—	60mA	1		w/o Timer
			—	80mA	1		w/Timer
	Anti–Theft		—	20mA	1		Warning box
	Check Trans		74	1.4W	1	Red	Meter
	A/T Oil Temp		74	1.4W	1	Red	Meter
	Seat Heater SW		—	50mA	2		
	Mirror Defogger Sw		—	0.84W	1		
	Fog Light SW		—	0.7W	1		
	Cruise Set		74	1.4W	1	Green	Meter
	Cruise Main		74	1.4W	1	Green	Meter
	Power Drive		74	1.4W	1	Amben	Meter
	Winter Driver		74	1.4W	1	Green	Meter
	Turn Signal		74	1.4W	2	Green	Meter
	Upshift		74	1.4W	1	Amben	Meter
	High Beam		74	1.4W	1	Blue	Meter
	ABS		74	1.4W	1	Amben	Meter
	Seat Belt		80	2W	1	Red	Meter
	Malfunction Indicator (Check Engine)		74	1.4W	1	Amben	Meter
	Low Fuel		74	1.4W	1	Amben	Meter
	4WD		74	1.4W	1	Green	Meter
	Oil Pressure		74	1.4W	1	Red	Meter
	Brake System		74	1.4W	1	Red	Meter
	Charge		74	1.4W	1	Red	Meter
	A/T Shift Position		74	1.4W	7	P,N,D,3,2, L : Green R : Amben	Meter
	Air Bag		80	2W	1	Red	Meter
	TOD	Front–1	74	1.4W	1	Green	
		Front–2	74	1.4W	1	Green	
		Front–3	74	1.4W	1	Green	
		Rear	74	1.4W	1	Green	
		Auto	74	1.4W	1	Green	
		Check	74	1.4W	1	Red	

Torque Specifications

Application	N·m	Lb Ft	Lb In
Steering Shaft Nut	34	25	—

Downloaded from www.Manualslib.com manuals search engine

TROOPER

BODY AND ACCESSORIES

WIPER / WASHER SYSTEM

CONTENTS

Service Precaution 8B–1
Windshield Wiper/Washer System 8B–2
General Description 8B–2
Windshield Wiper And Washer Switch 8B–2
Removal and Installation 8B–2
Windshield Wiper Motor 8B–2
Removal 8B–2
Installation 8B–2
Windshield Washer Motor 8B–3
Removal 8B–3
Installation 8B–3
Windshield Wiper Linkage 8B–4
Windshield Wiper Linkage and Associated Parts 8B–4
Removal 8B–4
Installation 8B–4
Windshield Wiper Arm/Blade 8B–5
Removal 8B–5
Installation 8B–5
Windshield Wiper Blade Rubber 8B–6
Removal 8B–6
Installation 8B–6
Rear Wiper/Washer System 8B–7
General Description 8B–7
Rear Wiper and Washer Switch 8B–7
Removal 8B–7
Installation 8B–7
Rear Wiper Motor 8B–8
Removal 8B–8
Installation 8B–8
Alarm & Relay Control Unit 8B–9
Removal 8B–9
Installation 8B–9
Rear Washer Motor 8B–9
Removal 8B–9
Installation 8B–9
Rear Wiper Arm/Blade 8B–10
Removal 8B–10
Installation 8B–10
Rear Washer Nozzle 8B–10
Removal 8B–10
Installation 8B–10
Rear Washer Nozzle Angle Adjustment . . . 8B–10
Rear Wiper Blade Rubber 8B–11
Removal and Installation 8B–11
Main Data and Specifications 8B–11

Service Precaution

WARNING: THIS VEHICLE HAS A SUPPLEMENTAL RESTRAINT SYSTEM (SRS). REFER TO THE SRS COMPONENT AND WIRING LOCATION VIEW IN ORDER TO DETERMINE WHETHER YOU ARE PERFORMING SERVICE ON OR NEAR THE SRS COMPONENTS OR THE SRS WIRING. WHEN YOU ARE PERFORMING SERVICE ON OR NEAR THE SRS COMPONENTS OR THE SRS WIRING, REFER TO THE SRS SERVICE INFORMATION. FAILURE TO FOLLOW WARNINGS COULD RESULT IN POSSIBLE AIR BAG DEPLOYMENT, PERSONAL INJURY, OR OTHERWISE UNNEEDED SRS SYSTEM REPAIRS.

CAUTION: Always use the correct fastener in the proper location. When you replace a fastener, use ONLY the exact part number for that application. ISUZU will call out those fasteners that require a replacement after removal. ISUZU will also call out the fasteners that require thread lockers or thread sealant. UNLESS OTHERWISE SPECIFIED, do not use supplemental coatings (Paints, greases, or other corrosion inhibitors) on threaded fasteners or fastener joint interfaces. Generally, such coatings adversely affect the fastener torque and the joint clamping force, and may damage the fastener. When you install fasteners, use the correct tightening sequence and specifications. Following these instructions can help you avoid damage to parts and systems.

Downloaded from www.Manualslib.com manuals search engine

Windshield Wiper/Washer System

General Description

The circuit consists of the starter switch, windshield wiper & washer switch, windshield wiper motor, windshield washer motor and windshield intermittent relay.

When the wiper & washer switch is turned on with the starter switch on, the battery voltage is applied to the wiper motor to activate the wiper.
The washer motor squirts glass cleaning fluid while the washer switch is being pushed. The intermittent relay is used to control motion of the wiper.

Windshield Wiper And Washer Switch

Removal and Installation

Refer to the Lighting Switch (Combination Switch) in Lighting System section.

Windshield Wiper Motor

Removal

1. Disconnect the battery ground cable.
2. Disconnect the connector.
3. Remove 4 mounting bolts.
4. Remove the windshield wiper motor(1).

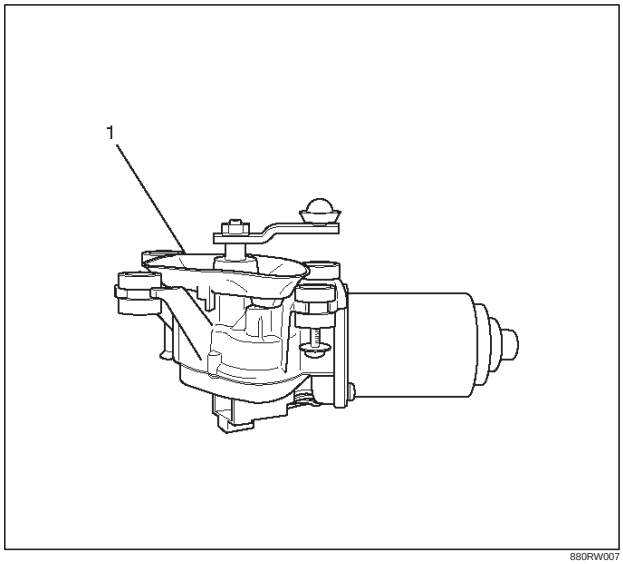

880RW007

Installation

To install, follow the removal steps in the reverse order.

Downloaded from www.Manualslib.com manuals search engine

Windshield Washer Motor

Removal

1. Disconnect the battery ground cable.
2. Remove the fender inner liner (right side) (1).
3. Remove the screws and then remove the front combination light(2).
4. Remove 2 screws, the filler neck and the hose.
5. Disconnect the windshield washer motor connector and remove the washer tank (4).
6. Pull the windshield washer motor(3) from the washer tank(4).

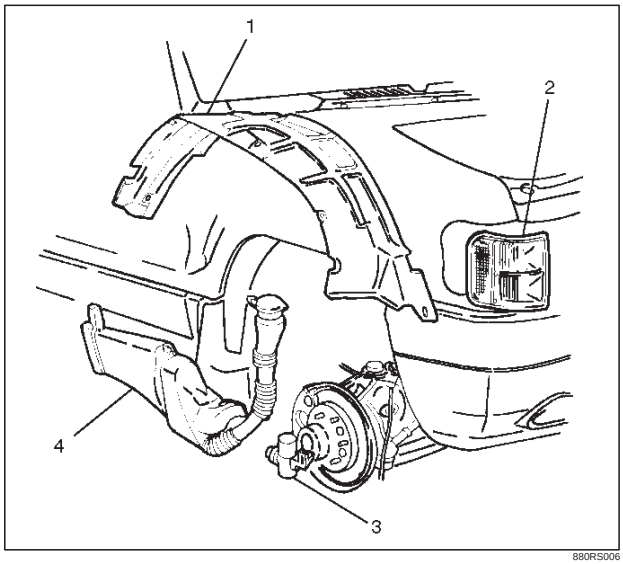

880RS006

Installation

To install, follow the removal steps in the reverse order.

Downloaded from www.Manualslib.com manuals search engine

Windshield Wiper Linkage

Windshield Wiper Linkage and Associated Parts

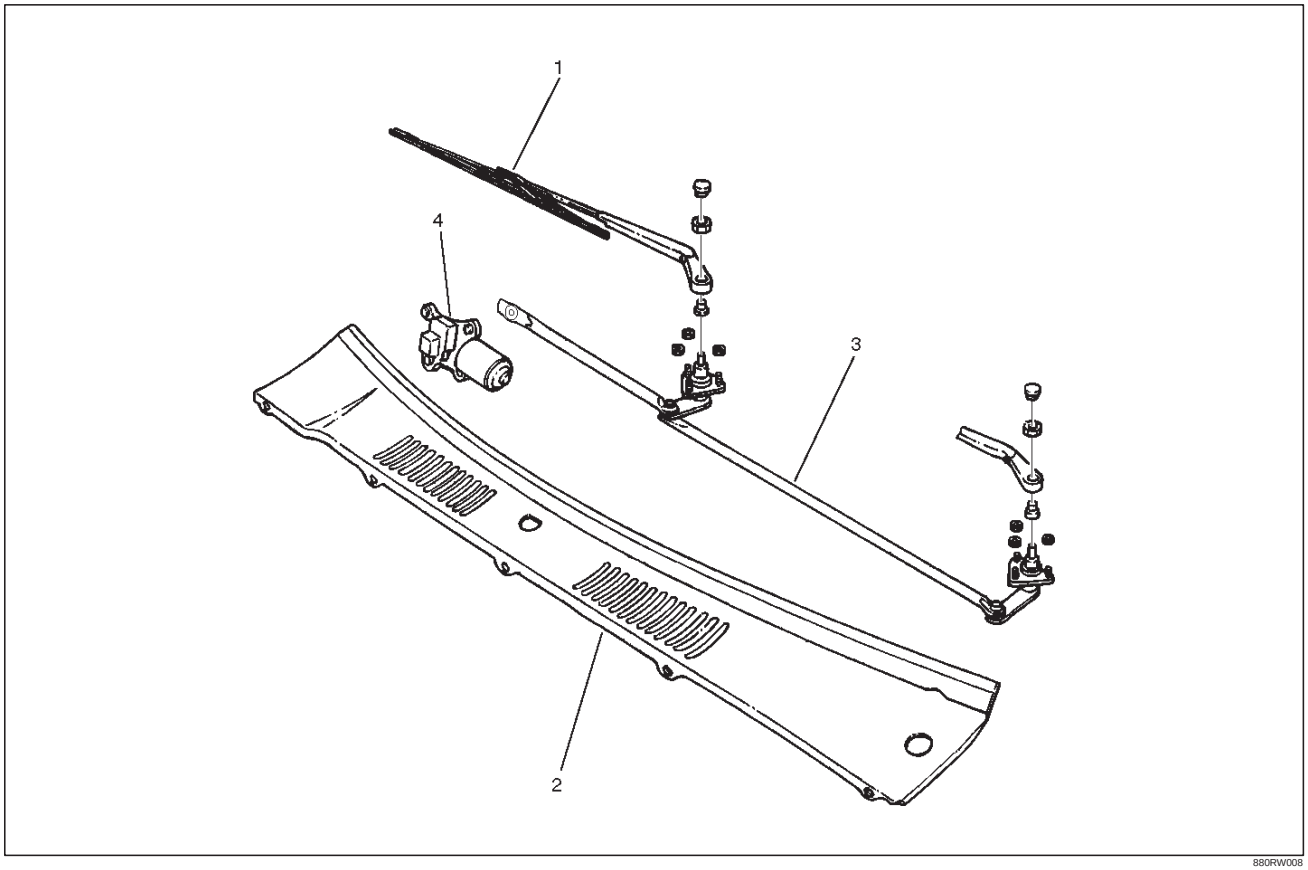

Legend

(1) Windshield Wiper Arm/Blade
(2) Vent Cowl Cover
(3) Windshield Wiper Linkage Assembly
(4) Windshield Wiper Motor

Removal

1. Disconnect the battery ground cable.
2. Remove the windshield wiper arm/blade.
3. Remove the windshield wiper motor.
4. Remove the pivot assembly mounting nuts, fixing screws and then remove the vent cowl cover.
5. Take out the windshield wiper linkage assembly from the opening of the cowl.

Installation

To install, follow the removal steps in the reverse order.

Downloaded from www.Manualslib.com manuals search engine

Windshield Wiper Arm/Blade

Removal

1. Pry the cap(2) off with the tip of a screwdriver.
2. Remove the nut(3).
3. Remove the wiper/blade(1).

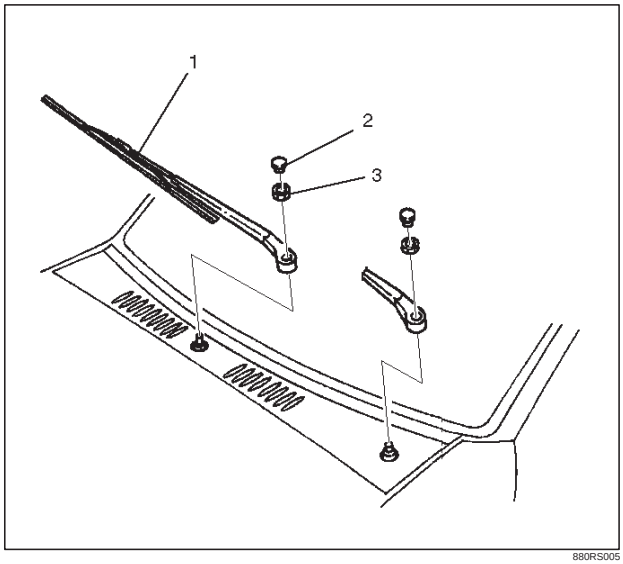

880RS005

Installation

To install, follow the removal steps in the reverse order, noting the following points.

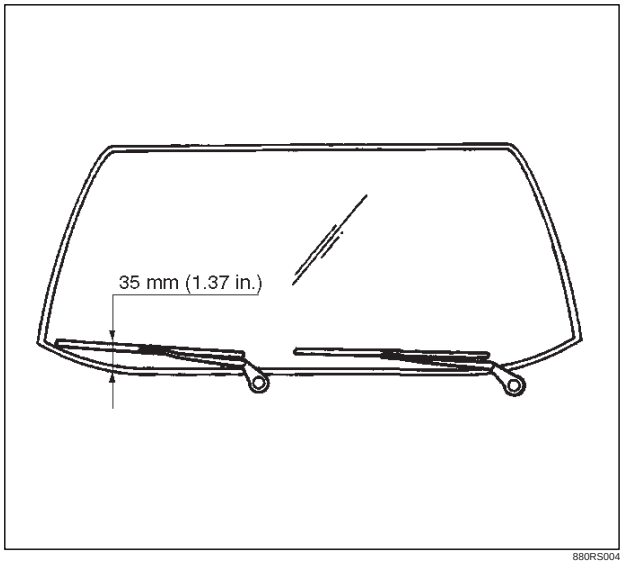

880RS004

1. Wiper arm/blade
   - Before installing the wiper arm/blade to the shaft, confirm that the motor stops at the auto-stop position.
   - Set the wiper arm/blade so that the tips of both blades are positioned about 35 mm (1.37 in) from the upper edge of the cowl cover as shown in the figure.
   - Tighten the nuts to the specified torque.

Torque: 31 N·m (23 lb ft)

Downloaded from www.Manualslib.com manuals search engine

Windshield Wiper Blade Rubber

Removal

1. Push the wiper blade lock(1) while pulling the wiper blade in the arrow direction as shown in the figure.

CAUTION: When the wiper blade has been removed, wrap the tip of the wiper arm with cloth, to avoid damaging the glass.

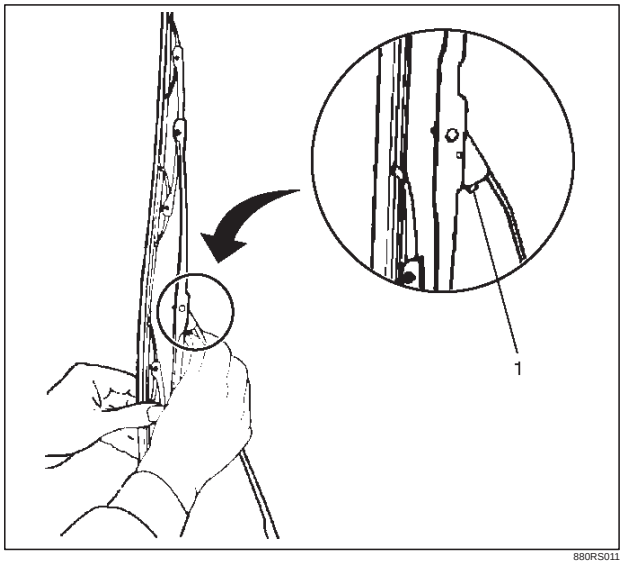

880RS011

2. Pull the end of rubber and remove the projection(3) from the click of the blade stay (2).

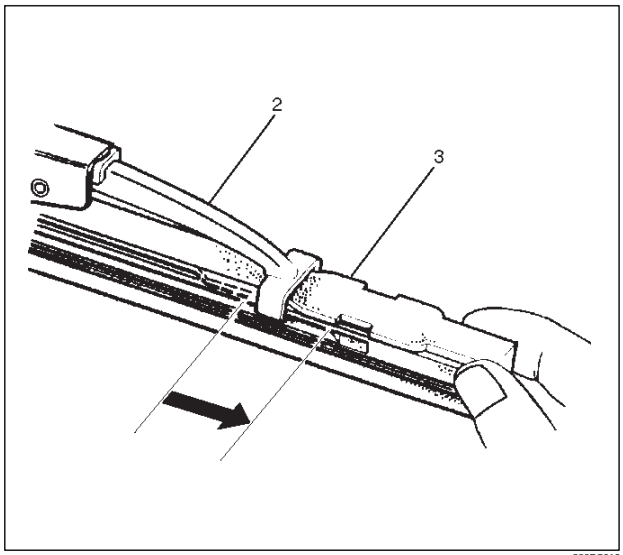

880RS010

3. Pull the rubber out in the same direction.

Installation

To install, follow the removal steps in the reverse order, noting the following points.

1. Install the click of the blade stay in the groove of the new rubber and slide it in. Complete wiper blade installation by pushing the click.

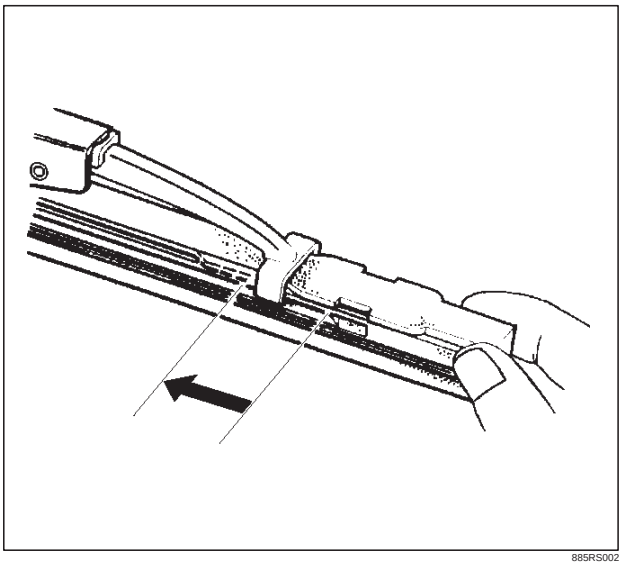

885RS002

2. Finally, check that the click of the stay has caught in the hole of the rubber.

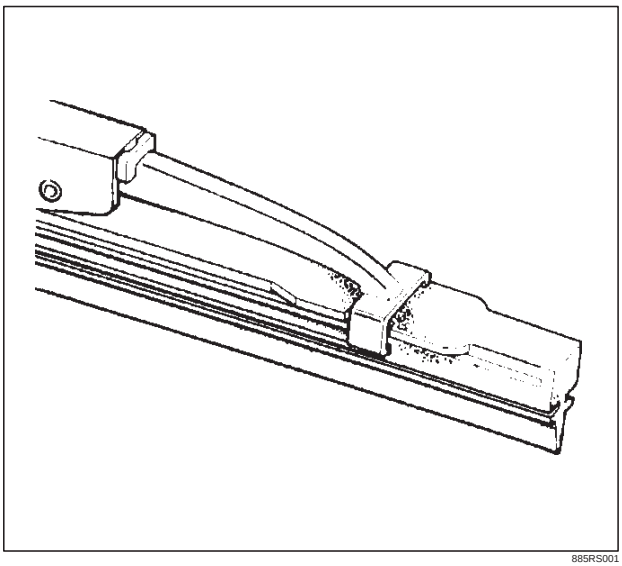

885RS001

Downloaded from www.Manualslib.com manuals search engine

Rear Wiper/Washer System

General Description

The circuit consists of the starter switch, rear wiper & washer switch, rear wiper motor, rear washer motor and rear intermittent relay.

When the wiper & washer switch is turned on with the starter switch on, the battery voltage is applied to the wiper motor to activate the wiper.
The washer motor squirts glass cleaning fluid while the washer switch is being pushed. The intermittent relay is used to control motion of the wiper.

Rear Wiper and Washer Switch

Removal

1. Disconnect the battery ground cable.
2. Remove the front console assembly(1).
   Refer to the Instrument Panel Assembly in Body Structure section.
3. Remove the lower cluster assembly(2).
   Refer to the Instrument Panel Assembly in Body Structure section.
4. Remove the instrument panel driver lower cover(3).
   Refer to the Instrument Panel Assembly in Body Structure section.

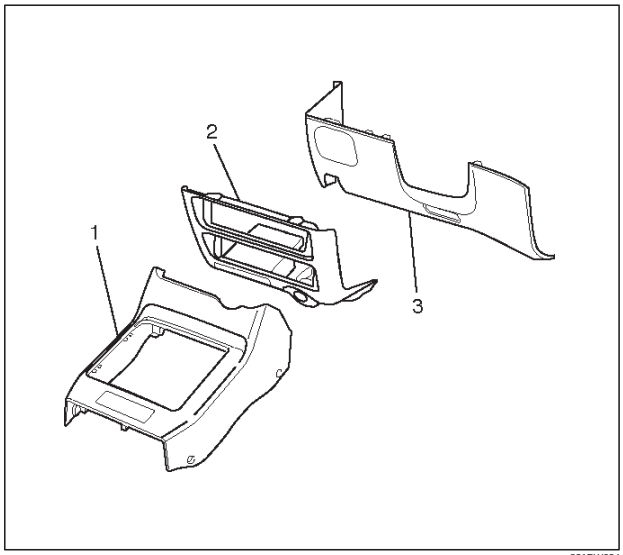

821RW024

5. Remove the instrument panel cluster assembly(4).
   Refer to the Instrument Panel Assembly in Body Structure section.
6. Disconnect the connector and push the lock from the back side of the instrument panel cluster assembly to remove the rear wiper & washer switch(5).

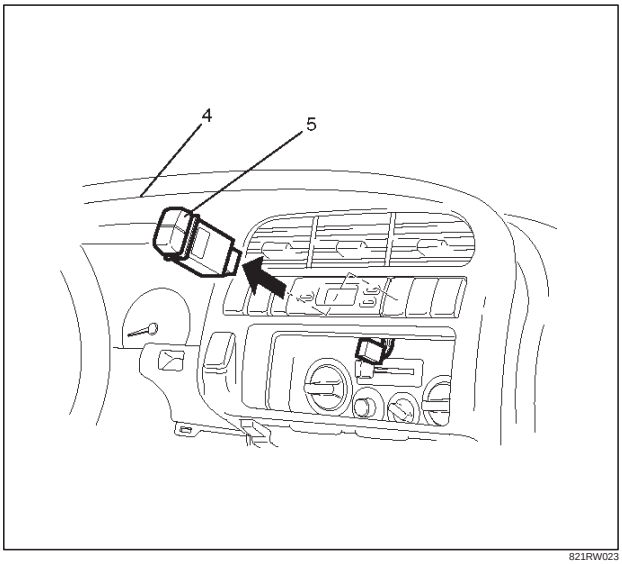

821RW023

Installation

To install, follow the removal steps in the reverse order, noting the following point:

1. Push the switch with your fingers until it locks securely.

Downloaded from www.Manualslib.com manuals search engine

Rear Wiper Motor

Removal

1. Disconnect the battery ground cable.
2. Remove the tailgate trim pad.
3. Remove the wiper arm/blade.
   Refer to the removal steps of the Rear Wiper Arm/Blade in this section.
4. Disconnect the connector remove the wiper shaft nut, remove the fixing screws and then remove the rear wiper motor(1).

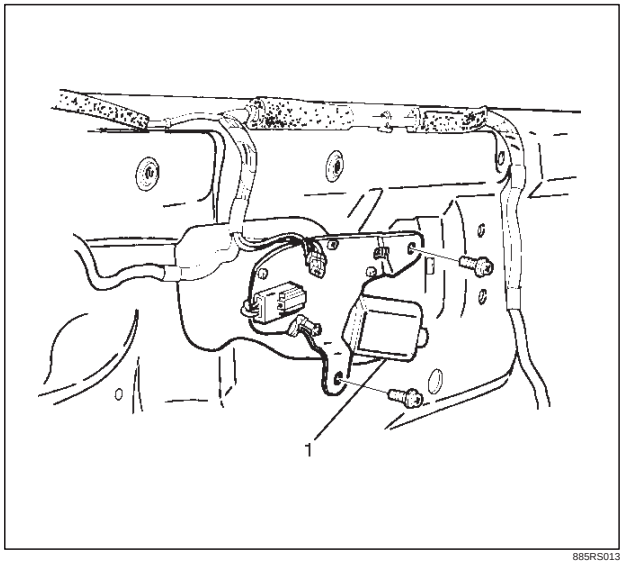

885RS013

Installation

To install, follow the removal steps in the reverse order, noting the following points.

1. Before installing the wiper arm/blade to the motor shaft, confirm that the motor stops at the auto-stop position.
2. Install the wiper arm so that the blade gets parallel to the lowermost heat wire(2) of the rear defogger (w/rear defogger), or position the blade 20 mm (0.79 in) from edge of tailgate glass (W/O rear defogger).

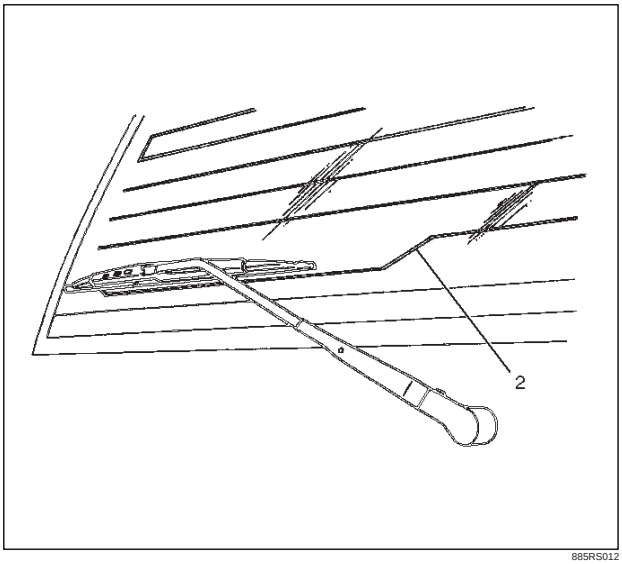

885RS012

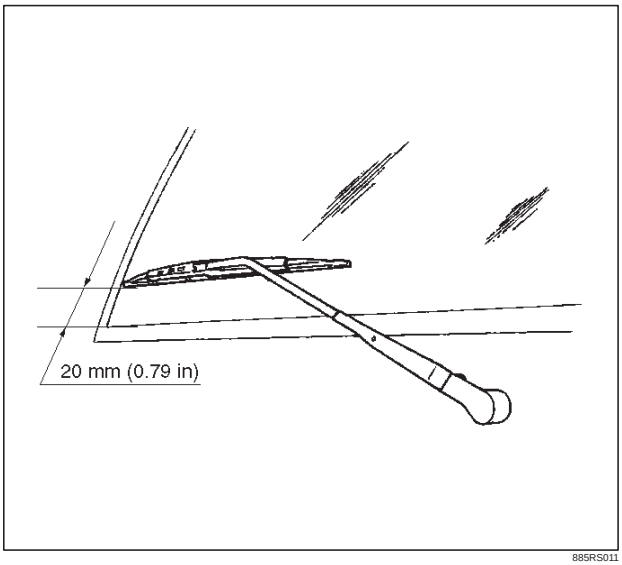

885RS011

3. Tighten the motor shaft nut to the specified torque.
   Torque: 6 N·m (52 lb in)
4. Tighten the wiper arm nut to the specified torque.
   Torque: 9 N·m (78 lb in)

Downloaded from www.Manualslib.com manuals search engine

Alarm & Relay Control Unit

Removal

1. Disconnect the battery ground cable.
2. Remove the glove box.
3. Remove the instrument panel passenger lower cover assembly.
4. Remove the passenger Knee bolster reinforcement assembly.
5. Remove the fixing bolts, disconnect the connectors and then remove the alarm & relay control unit (1).

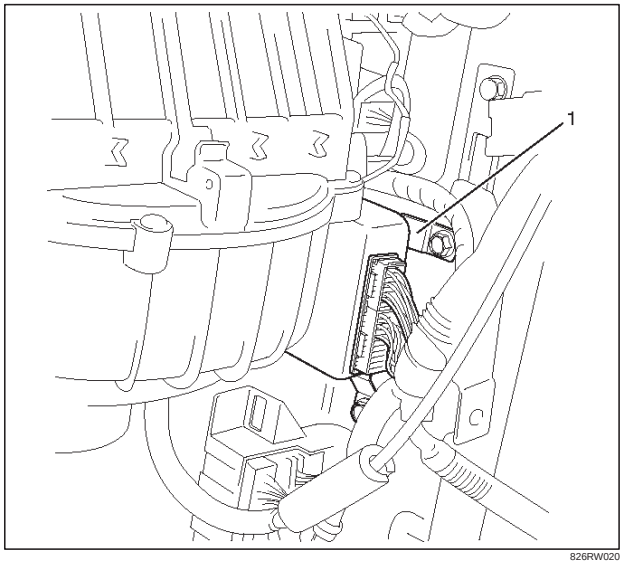

826RW020

Installation

To install, follow the removal steps in the reverse order.

Rear Washer Motor

Removal

1. Disconnect the battery ground cable.
2. Remove the tailgate trim pad(2).
3. Remove two screws, disconnect the connector, remove the washer hose and then remove the rear washer tank(3).
4. Pull out the rear washer motor(1) from the washer tank.

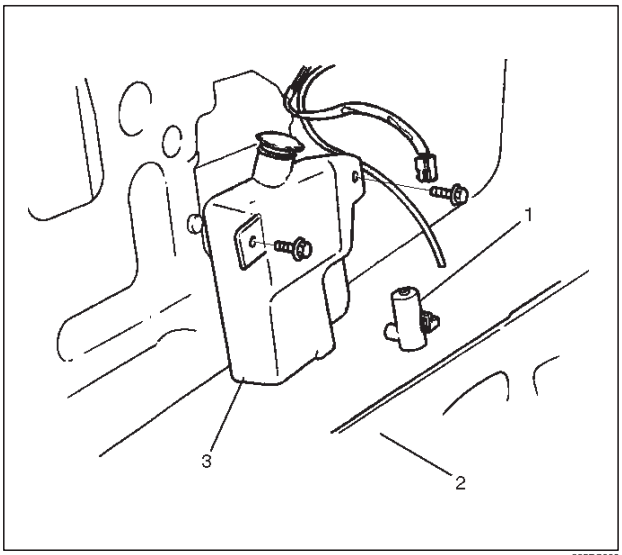

885RS009

Installation

To install, follow the removal steps in the reverse order.

Downloaded from www.Manualslib.com manuals search engine

Rear Wiper Arm/Blade

Removal

1. Remove the arm nut(2).
2. Remove the wiper arm/blade(1).

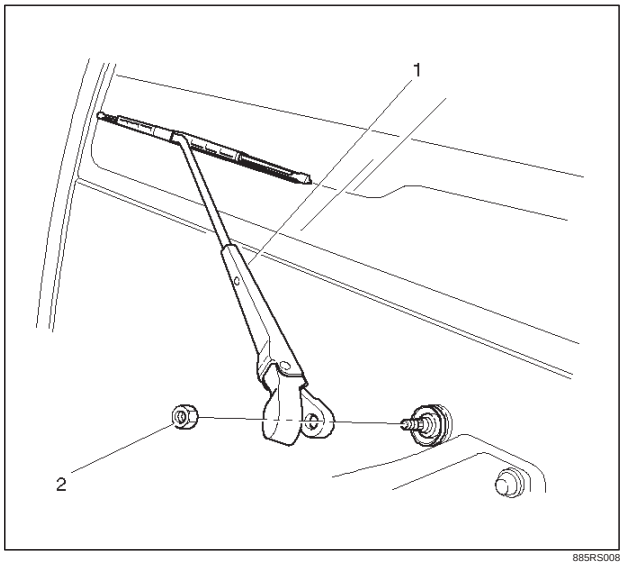

885RS008

Installation

Refer to the installation steps of the Rear Wiper Motor in Wiper/Washer System section.

Rear Washer Nozzle

Removal

1. Disconnect the hose(3).
2. Remove the lock nut(2), and then remove the washer nozzle(1).

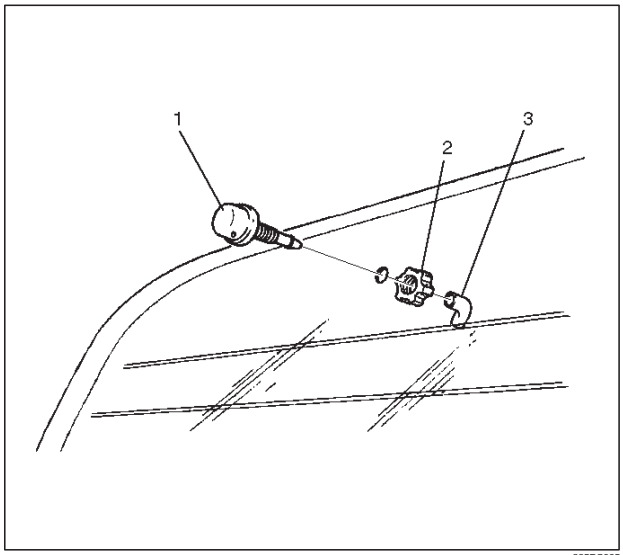

885RS005

Installation

To install, follow the removal steps in the reverse order.

Rear Washer Nozzle Angle Adjustment

Loosen the lock nut(2) of the washer nozzle(1) to adjust the injection angle of the cleaning fluid, and then retighten the lock nut(2).

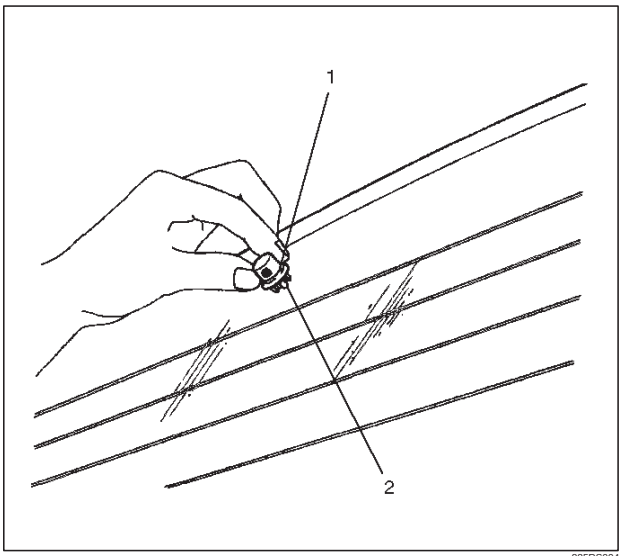

885RS004

Downloaded from www.Manualslib.com manuals search engine

Rear Washer Spray Pattern

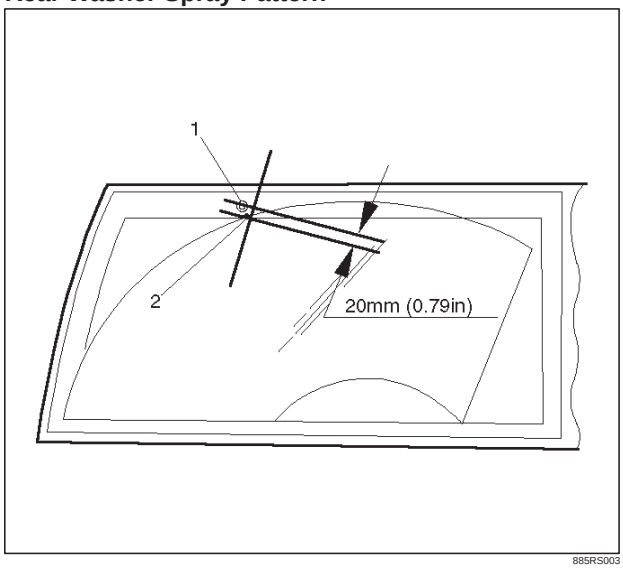

Legend
(1) Washer Nozzle
(2) Spray Target

Rear Wiper Blade Rubber

Removal and Installation

Refer to the Windshield Wiper Blade Rubber in this section.

Main Data and Specifications

Torque Specifications

Application	N·m	Lb Ft	Lb In
Windshield Wiper Motor Shaft Nut	14	—	122
Windshield Wiper Arm Nuts	31	23	—
Rear Wiper Motor Shaft Nut	6	—	52
Rear Wiper Arm Nut	9	—	78

Downloaded from www.Manualslib.com manuals search engine

TROOPER

BODY AND ACCESSORIES

ENTERTAINMENT

CONTENTS

Service Precaution 8C–1
Cigarette Lighter 8C–2
General Description 8C–2
Removal 8C–2
Installation 8C–2
Digital Clock 8C–2
Removal 8C–2
Installation 8C–3
Rod Type Antenna 8C–3
Removal 8C–3
Installation 8C–3
Diversity Glass Antenna 8C–4
Glass Antenna System Parts Location 8C–4
Glass Antenna Pattern 8C–5
Glass Antenna Amplifier Removal 8C–5
Glass Antenna Amplifier Installation 8C–5
Radio 8C–6
Removal 8C–6
Installation 8C–6
Front Speaker 8C–7
Removal 8C–7
Installation 8C–7
Tweeter Assembly 8C–7
Removal 8C–7
Installation 8C–7
Rear Speaker 8C–8
Removal 8C–8
Installation 8C–8

Service Precaution

WARNING: THIS VEHICLE HAS A SUPPLEMENTAL RESTRAINT SYSTEM (SRS). REFER TO THE SRS COMPONENT AND WIRING LOCATION VIEW IN ORDER TO DETERMINE WHETHER YOU ARE PERFORMING SERVICE ON OR NEAR THE SRS COMPONENTS OR THE SRS WIRING. WHEN YOU ARE PERFORMING SERVICE ON OR NEAR THE SRS COMPONENTS OR THE SRS WIRING, REFER TO THE SRS SERVICE INFORMATION. FAILURE TO FOLLOW WARNINGS COULD RESULT IN POSSIBLE AIR BAG DEPLOYMENT, PERSONAL INJURY, OR OTHERWISE UNNEEDED SRS SYSTEM REPAIRS.

CAUTION: Always use the correct fastener in the proper location. When you replace a fastener, use ONLY the exact part number for that application. ISUZU will call out those fasteners that require a replacement after removal. ISUZU will also call out the fasteners that require thread lockers or thread sealant. UNLESS OTHERWISE SPECIFIED, do not use supplemental coatings (Paints, greases, or other corrosion inhibitors) on threaded fasteners or fastener joint interfaces. Generally, such coatings adversely affect the fastener torque and the joint clamping force, and may damage the fastener. When you install fasteners, use the correct tightening sequence and specifications. Following these instructions can help you avoid damage to parts and systems.

Downloaded from www.Manualslib.com manuals search engine

Cigarette Lighter

General Description

When the cigarette lighter is pushed in with the starter switch at either “ACC” or “ON” position, a circuit is formed in the cigarette lighter case to heat the lighter coil.
The cigarette lighter is sprung back to its original position after the lighter coil is heated.

Removal

1. Disconnect the battery ground cable.
2. Remove the lower cluster assembly(1).
   Refer to the Instrument Panel Assembly removal steps in Body Structure section.
3. Disconnect the connectors, remove the socket of the illumination light, the retaining ring(7), the outer case(6), the cigarette lighter(3) and socket(4), the bezel(5) and then remove the cigarette lighter assembly(2).

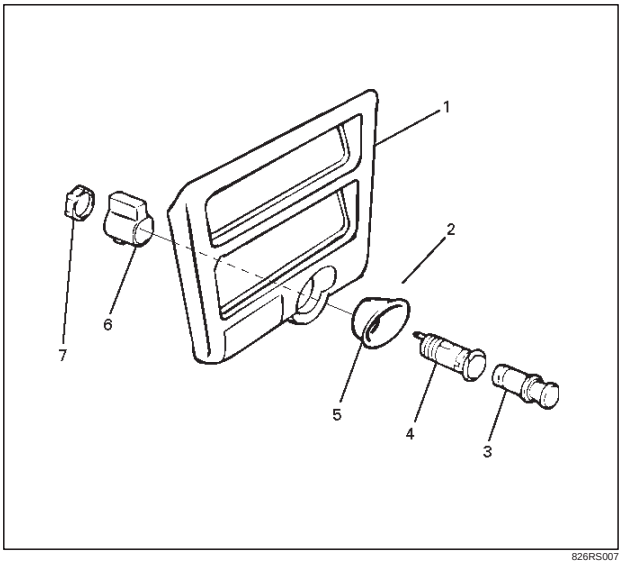

826RS007

Installation

To install, follow the removal steps in the reverse order, noting the following point.

1. When installing the bezel, align the projected portion of the socket with the notch of the bezel.

Digital Clock

Removal

1. Disconnect the battery ground cable.
2. Remove the front console assembly(1).
   Refer to the Instrument Panel Assembly in Body Structure section.
3. Remove the lower cluster assembly(2).
   Refer to the Instrument Panel Assembly in Body Structure section.
4. Remove the instrument panel driver lower cover assembly(3).
   Refer to the Instrument Panel Assembly in Body Structure section.

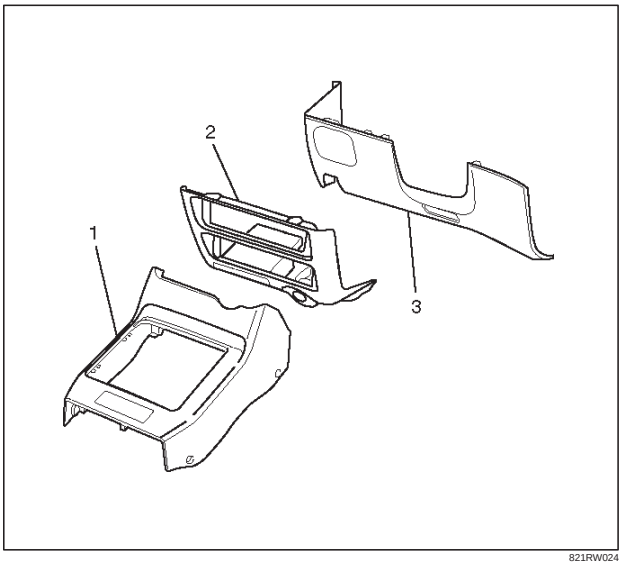

821RW024

5. Remove the instrument panel cluster assembly(4).
   Refer to the Instrument Panel Assembly in Body Structure section.

Downloaded from www.Manualslib.com manuals search engine

6. Disconnect the connector and push the lock from the back side of the instrument panel cluster assembly to remove the digital clock(5).

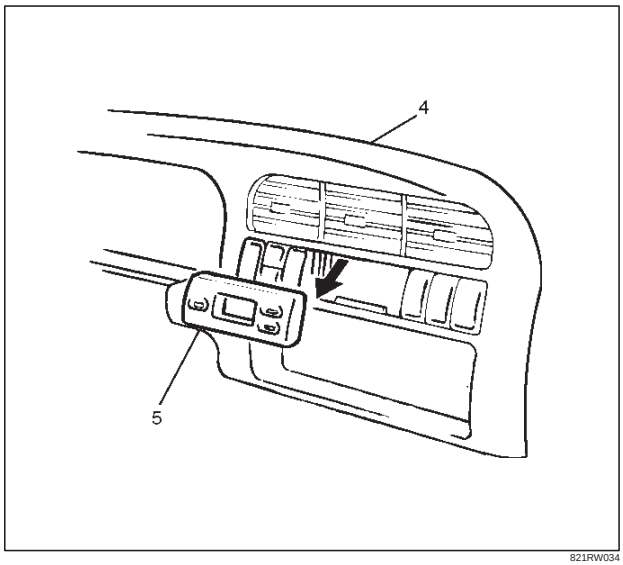

821RW034

Installation

To install, follow the removal steps in the reverse order, noting the following point.

1. Push in the switch with your fingers until it locks securely.

Rod Type Antenna

Removal

1. Disconnect the battery ground cable.
2. Turn the antenna rod(1) counterclockwise to remove it.
3. Remove three screws and nine clips to remove the fender inner liner(2).
4. Disconnect the feeder cable connector at the inside of the vehicle, remove the housing bracket screw, turn the lock nut counterclockwise to remove it together with the base mold and then remove the housing(3).

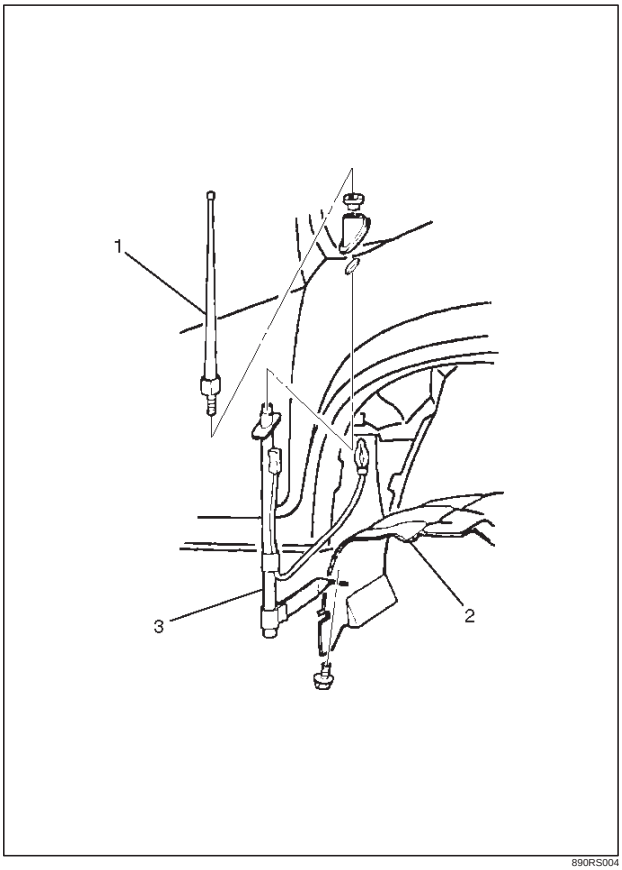

890RS004

Installation

To install, follow the removal steps in the reverse order.

Downloaded from www.Manualslib.com manuals search engine

Diversity Glass Antenna

Glass Antenna System Parts Location

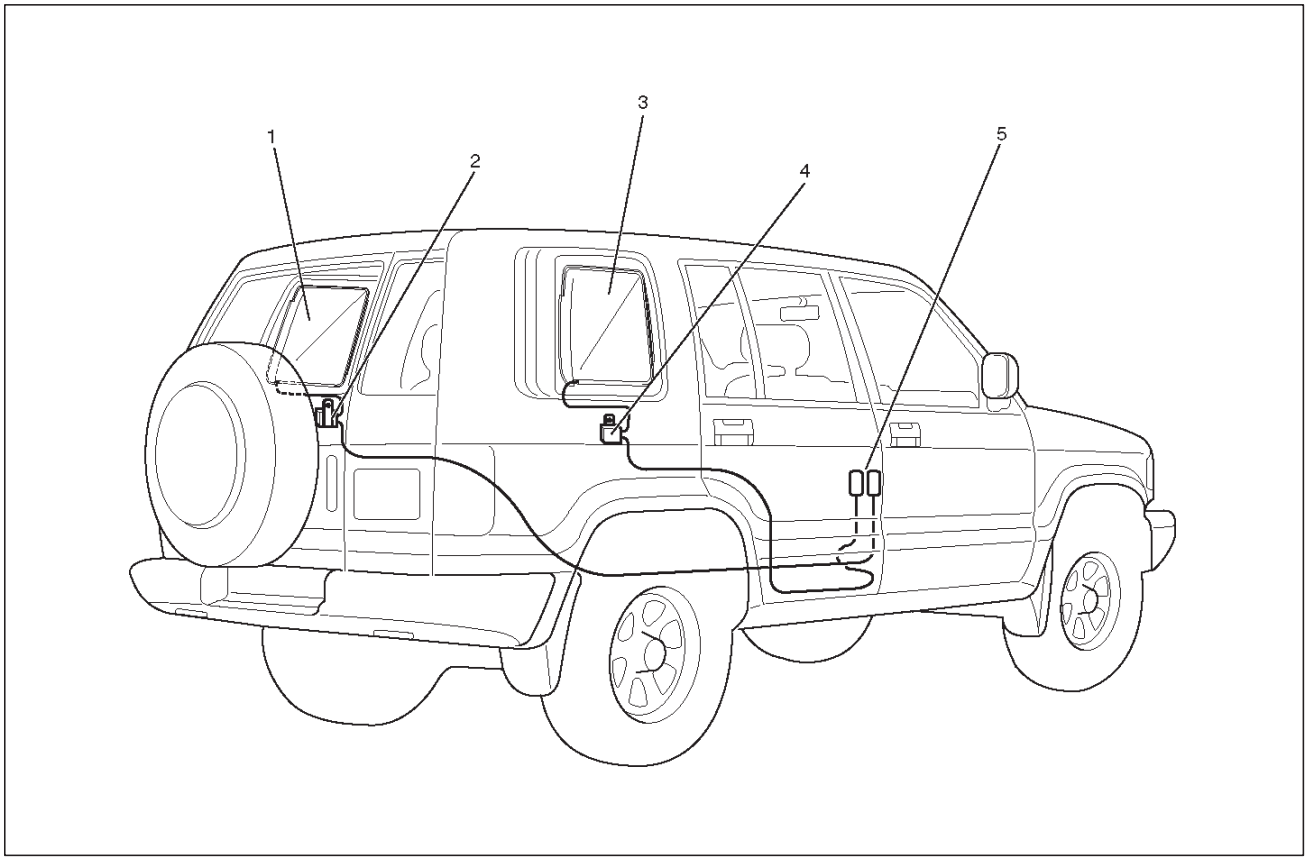

890RW014

Legend

(1) Glass Antenna (LH)
(2) Glass Antenna Amplifier
(3) Glass Antenna (RH)
(4) Glass Antenna Amplifier
(5) Connection with the audio side feeder cables at the dash side (RH)

Downloaded from www.Manualslib.com manuals search engine

Glass Antenna Pattern

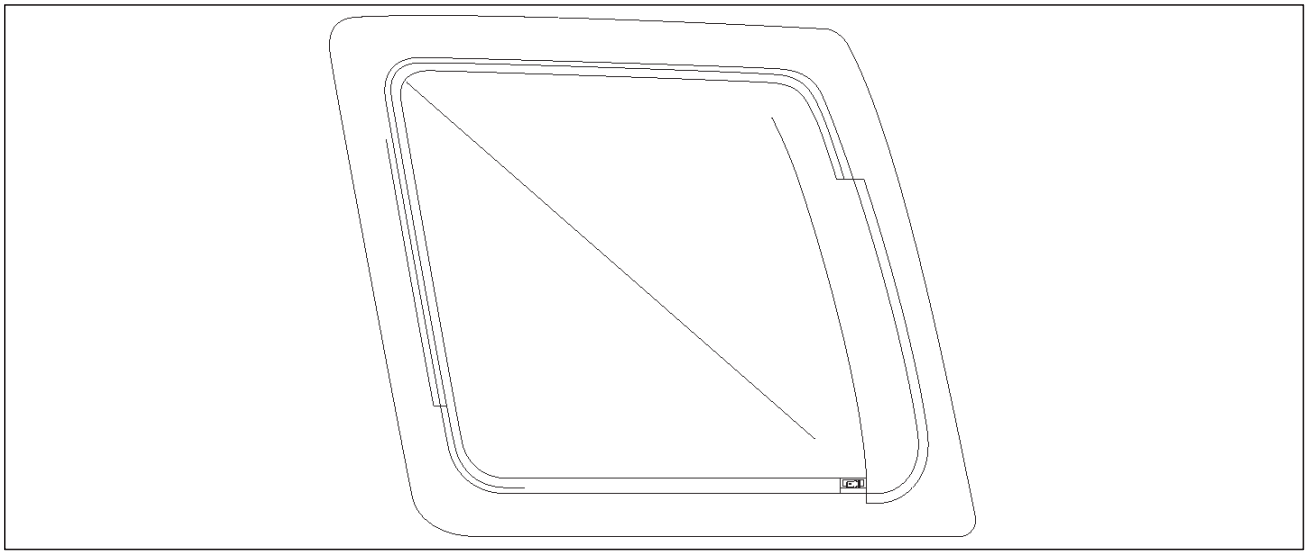

890RW016

Glass Antenna Amplifier Removal

1. Disconnect the battery ground cable.
2. Remove the luggage side trim cover.
   Refer to the Interior Trim Panels removal steps in Exterior/Interior Trim section.
3. Disconnect the connector(1)&(4), feeder cable(3) and remove two screws to remove the glass antenna amplifier(2).

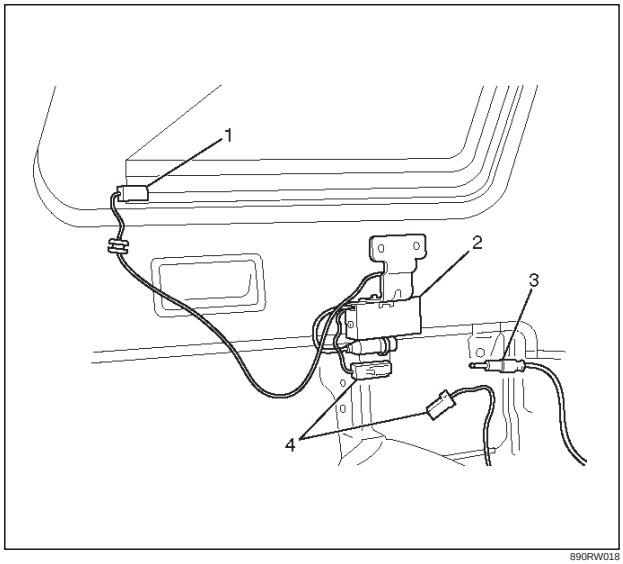

890RW018

Glass Antenna Amplifier Installation

To install, follow the removal steps in the reverse order.

Downloaded from www.Manualslib.com manuals search engine

Radio

Removal

1. Disconnect the battery ground cable.
2. Remove the front console assembly (1).
   Refer to the Instrument Panel Assembly in Body Structure section.
3. Remove the lower cluster assembly (2).
   Refer to the Instrument Panel Assembly in Body Structure section.
4. Remove the instrument panel driver lower cover assembly (3).
   Refer to the Instrument Panel Assembly in Body Structure section.

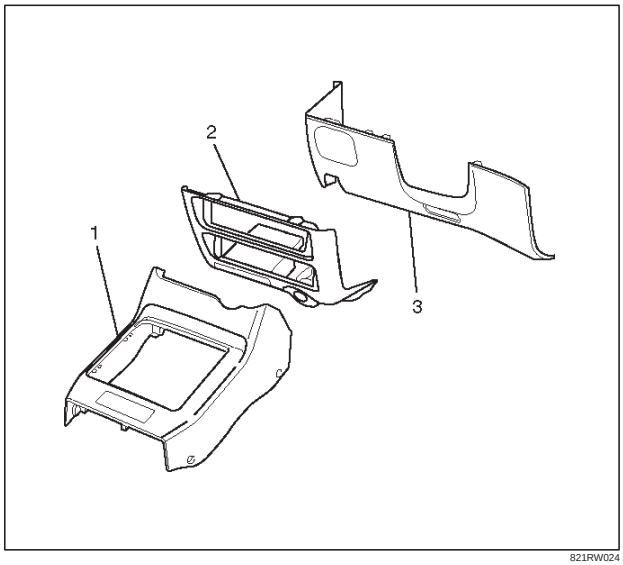

821RW024

5. Remove the instrument panel cluster assembly(4).
   Refer to the Instrument Panel Assembly in Body Structure section.
6. Remove two screws and disconnect the radio connector(5) and antenna feeder plug(6) to remove the radio(7).

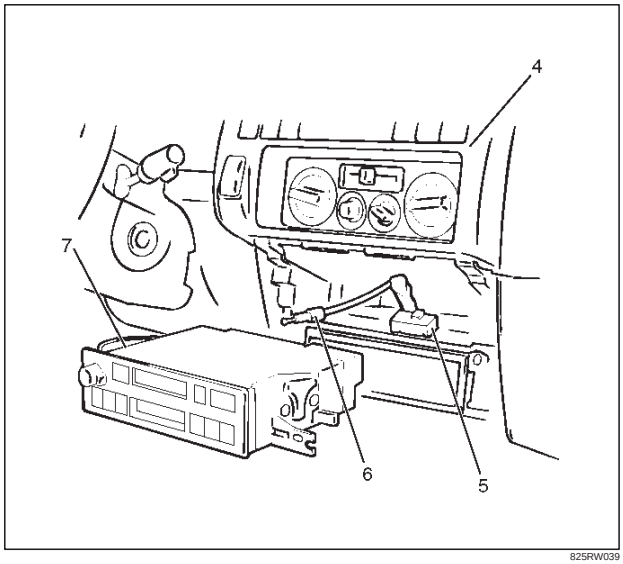

825RW039

Installation

To install, follow the removal steps in the revers order.

Downloaded from www.Manualslib.com manuals search engine

Front Speaker

Removal

1. Disconnect the battery ground cable.
2. Pull the grille(1) to release the locks and then remove it.
3. Remove four screws and disconnect the connector(3) to remove the speaker(2).

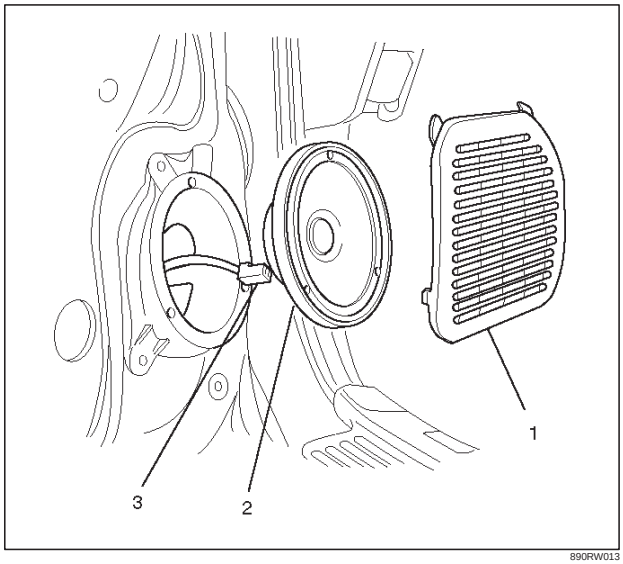

890RW013

Installation

To install, follow the removal steps in the reverse order.

Tweeter Assembly

Removal

1. Disconnect the battery ground cable.
2. Pull the tweeter, assembly(1) to release the clips(2) and disconnect the connector(3) to remove the tweeter assembly.

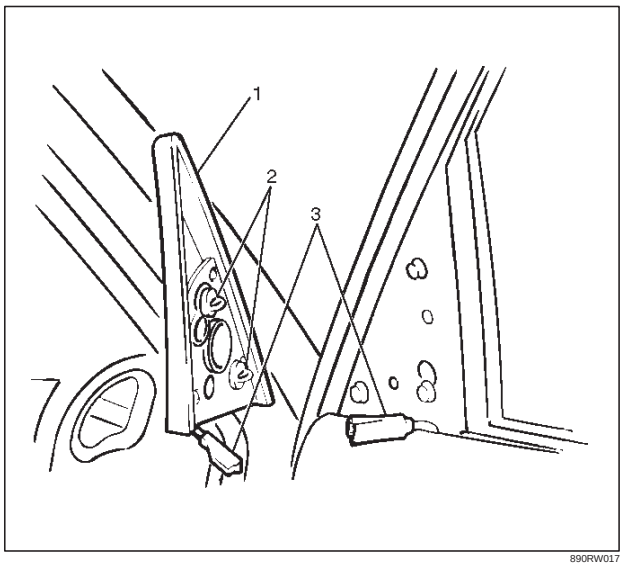

890RW017

Installation

To install, follow the removal steps in the reverse order.

Downloaded from www.Manualslib.com manuals search engine

Rear Speaker

Removal

1. Disconnect the battery ground cable.
2. Pull the grille(1) to release the locks and then remove it.
3. Remove four screws and disconnect the connector(3) to remove the speaker(2).

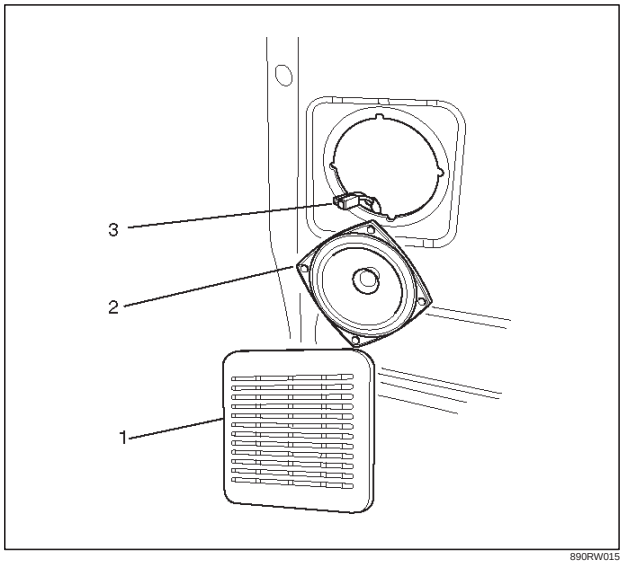

890RW015

Installation

To install, follow the removal steps in the reverse order.

Downloaded from www.Manualslib.com manuals search engine

TROOPER

BODY AND ACCESSORIES

WIRING SYSTEM

CONTENTS

Fuse, Relay and Diode 8D–2
Relay and Fuse Box / Fuse Box Location . 8D–2
Relay & Fuse Box 8D–3
Fuse Box 8D–4
Circuit Diagram 8D–5

Downloaded from www.Manualslib.com manuals search engine

Fuse, Relay and Diode

Relay and Fuse Box / Fuse Box Location

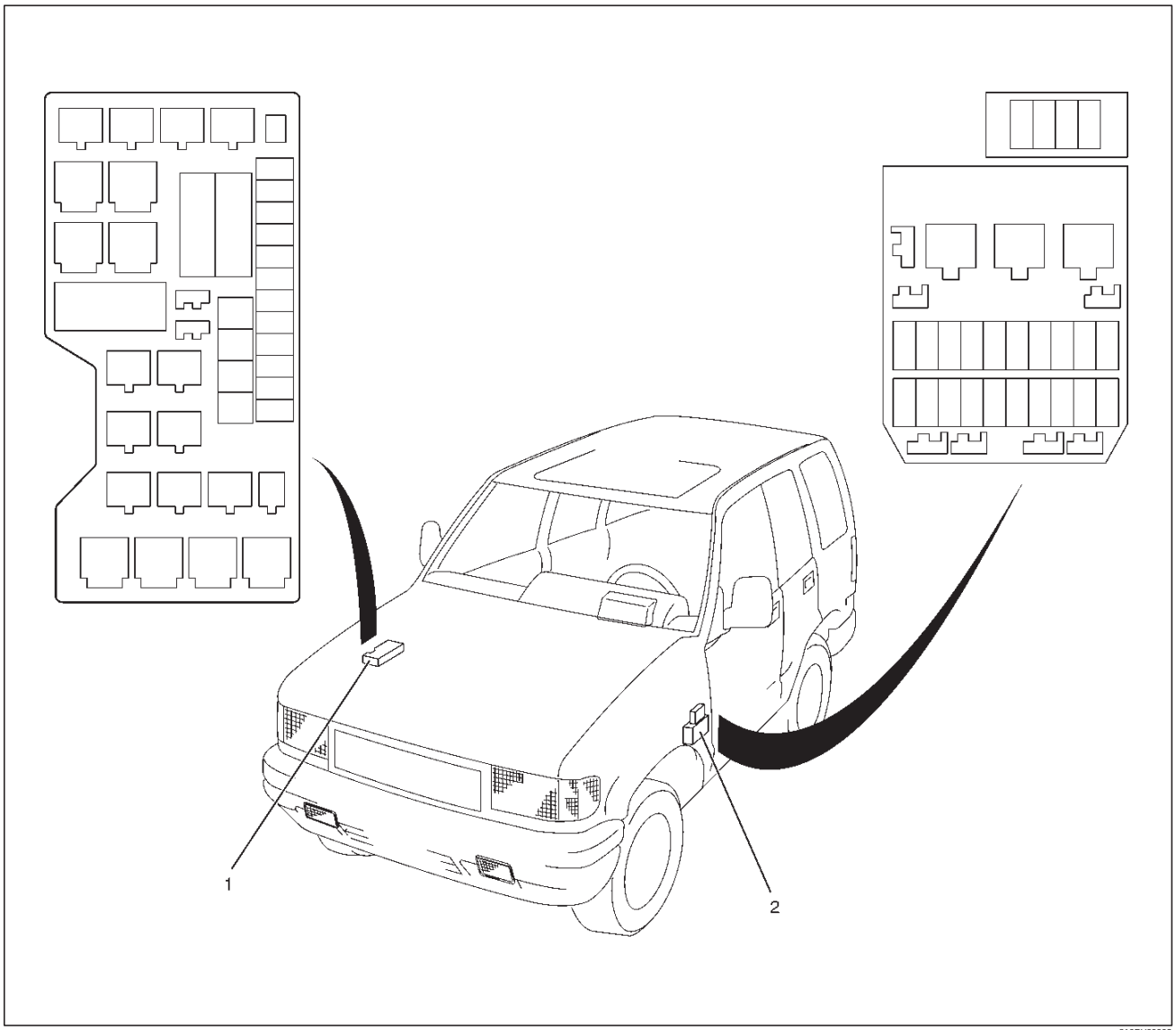

810RY00003

Legend

(1) Relay and Fuse Box
(2) Fuse Box

Downloaded from www.Manualslib.com manuals search engine

Relay & Fuse Box

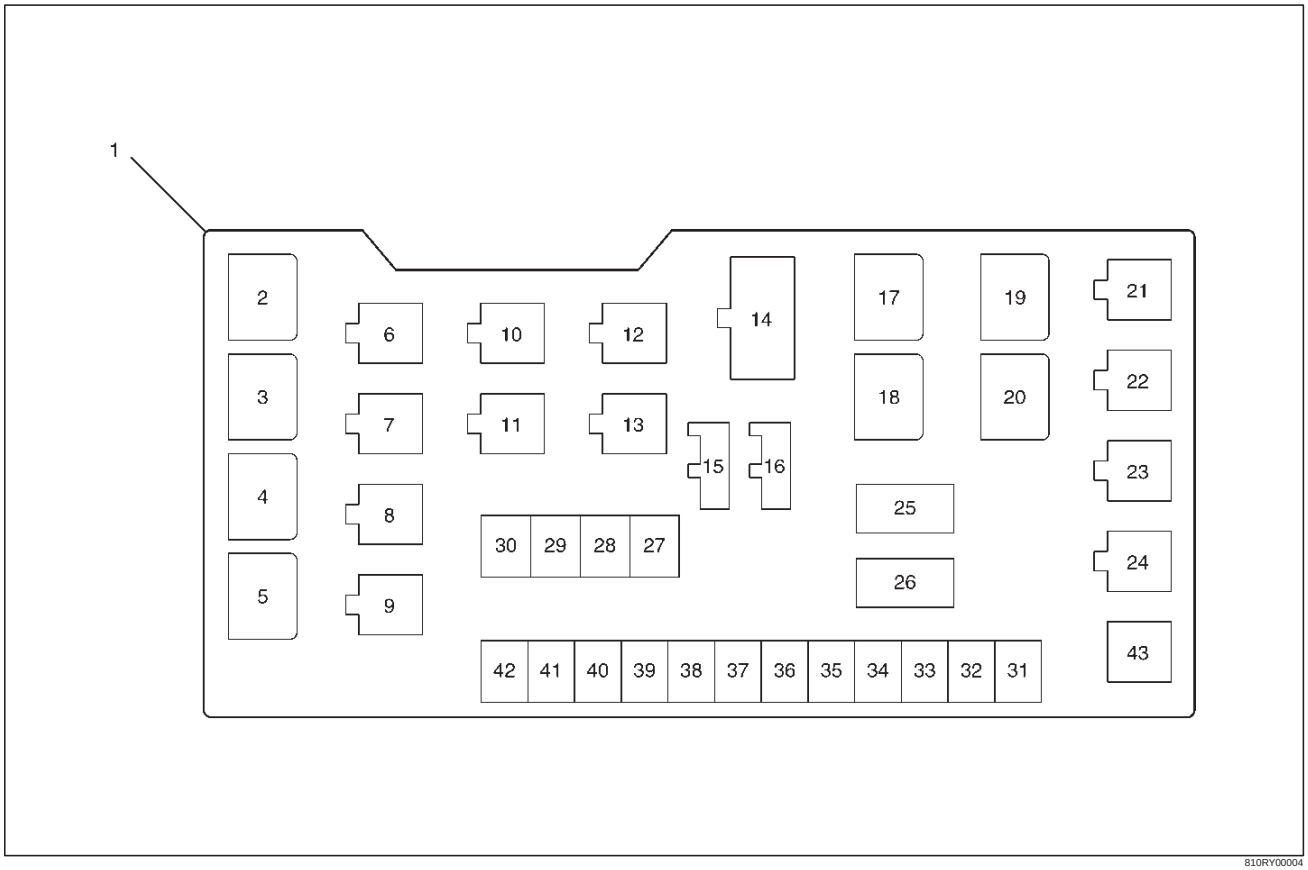

810RY00004

Legend

(1) Relay & Fuse Box
(2) Lighting Relay
(3) Not Used
(4) Not Used
(5) Not Used
(6) Thermo Relay
(7) Not Used
(8) Compressor Relay
(9) Horn Relay
(10) Tail Relay
(11) Not Used
(12) Fuel Pump Relay
(13) PCM Main Relay
(14) Not Used
(15) Not Used
(16) Diode
(17) Upshift Relay–1
(18) Starter Relay
(19) Not Used
(20) Not Used
(21) Not Used
(22) Not Used
(23) Cornering Relay
(24) Fog Light Relay
(25) Fusible Link (Main)
(26) Fusible Link (Key SW)
(27) Fusible Link (ECM)
(28) Fusible Link (Condenser Fan)
(29) Not Used
(30) Fusible Link (ABS)
(31) Fuse F–1 (Not Used)
(32) Fuse F–2 (20A)
(33) Fuse F–3 (15A)
(34) Fuse F–4 (15A)
(35) Fuse F–5 (15A)
(36) Fuse F–6 (10A)
(37) Fuse F–7 (Not Used)
(38) Fuse F–8 (15A)
(39) Fuse F–9 (20A)
(40) Fuse F–10 (15A)
(41) Fuse F–11 (Not Used)
(42) Fuse F–12 (15A)
(43) Upshift Resistor

Downloaded from www.Manualslib.com manuals search engine

Fuse Box

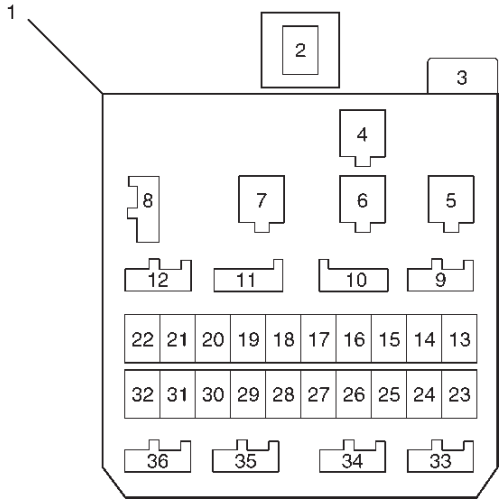

810RY00005

Legend

(1) Fuse Box
(2) Fuse C–21 (10A)
(3) Flasher Unit
(4) H–49
(5) Rear Defogger Relay
(6) Power Window Relay
(7) Heater & A/C Relay
(8) Diode (Not Used)
(9) Diode (Not Used)
(10) Circuit Breaker C/B–2
(11) Circuit Breaker C/B–1 (Not Used)
(12) Diode (Not Used)
(13) Fuse C–1 (10A)
(14) Fuse C–2 (15A)
(15) Fuse C–3 (15A)
(16) Fuse C–4 (15A)
(17) Fuse C–5 (15A)
(18) Fuse C–6 (10A)
(19) Fuse C–7 (Not Used)
(20) Fuse C–8 (15A)
(21) Fuse C–9 (15A)
(22) Fuse C–10 (10A)
(23) Fuse C–11 (10A)
(24) Fuse C–12 (20A)
(25) Fuse C–13 (10A)
(26) Fuse C–14 (15A)
(27) Fuse C–15 (20A)
(28) Fuse C–16 (10A)
(29) Fuse C–17 (25A)
(30) Fuse C–18 (20A)
(31) Fuse C–19 (25A)
(32) Fuse C–20 (10A)
(33) Diode (Not Used)
(34) Diode (Not Used)
(35) Diode (Not Used)
(36) Diode (Lighting)

Downloaded from www.Manualslib.com manuals search engine

Circuit Diagram

Downloaded from www.Manualslib.com manuals search engine

Fuse Block Circuit

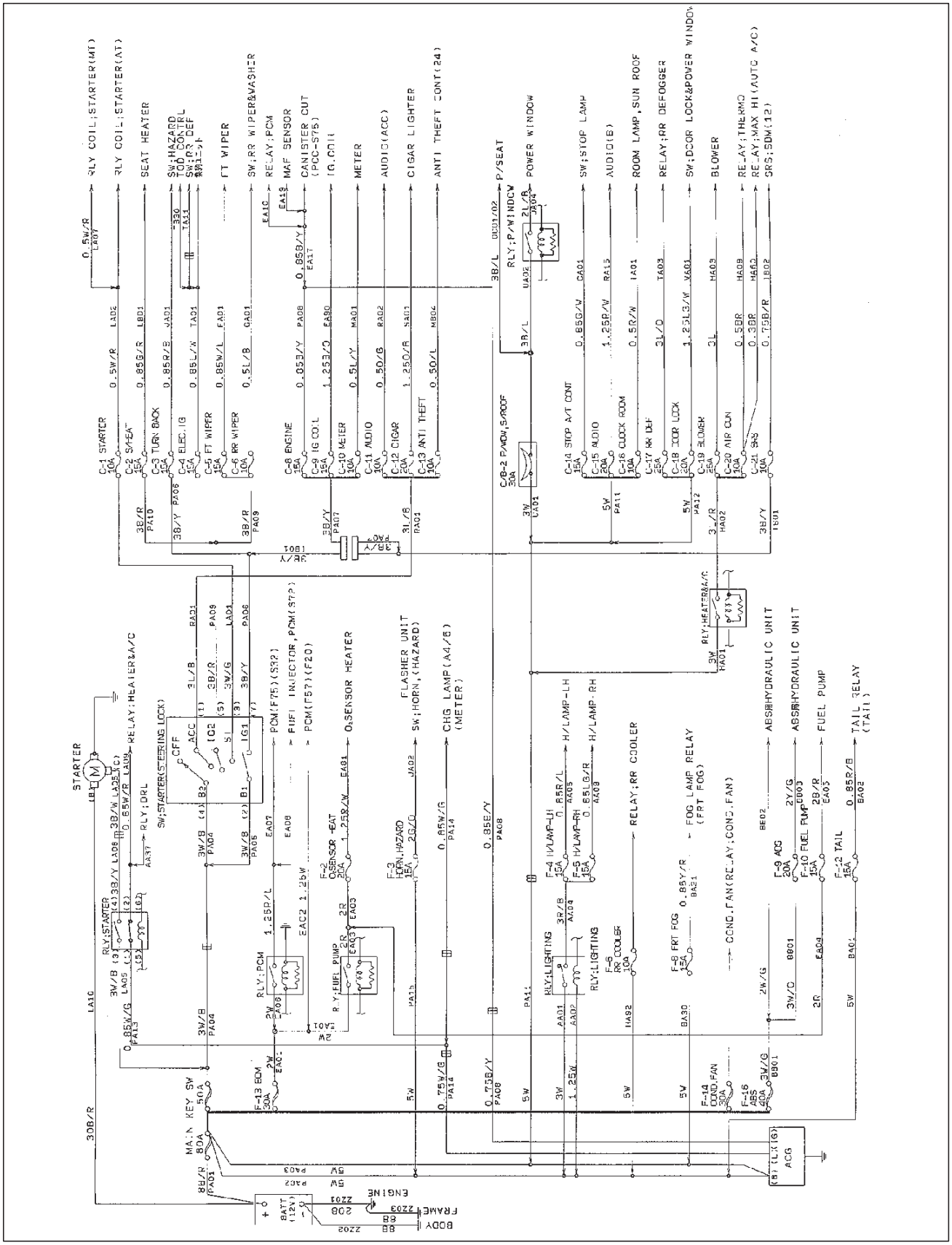

Downloaded from www.Manualslib.com manuals search engine

Starter and Generator

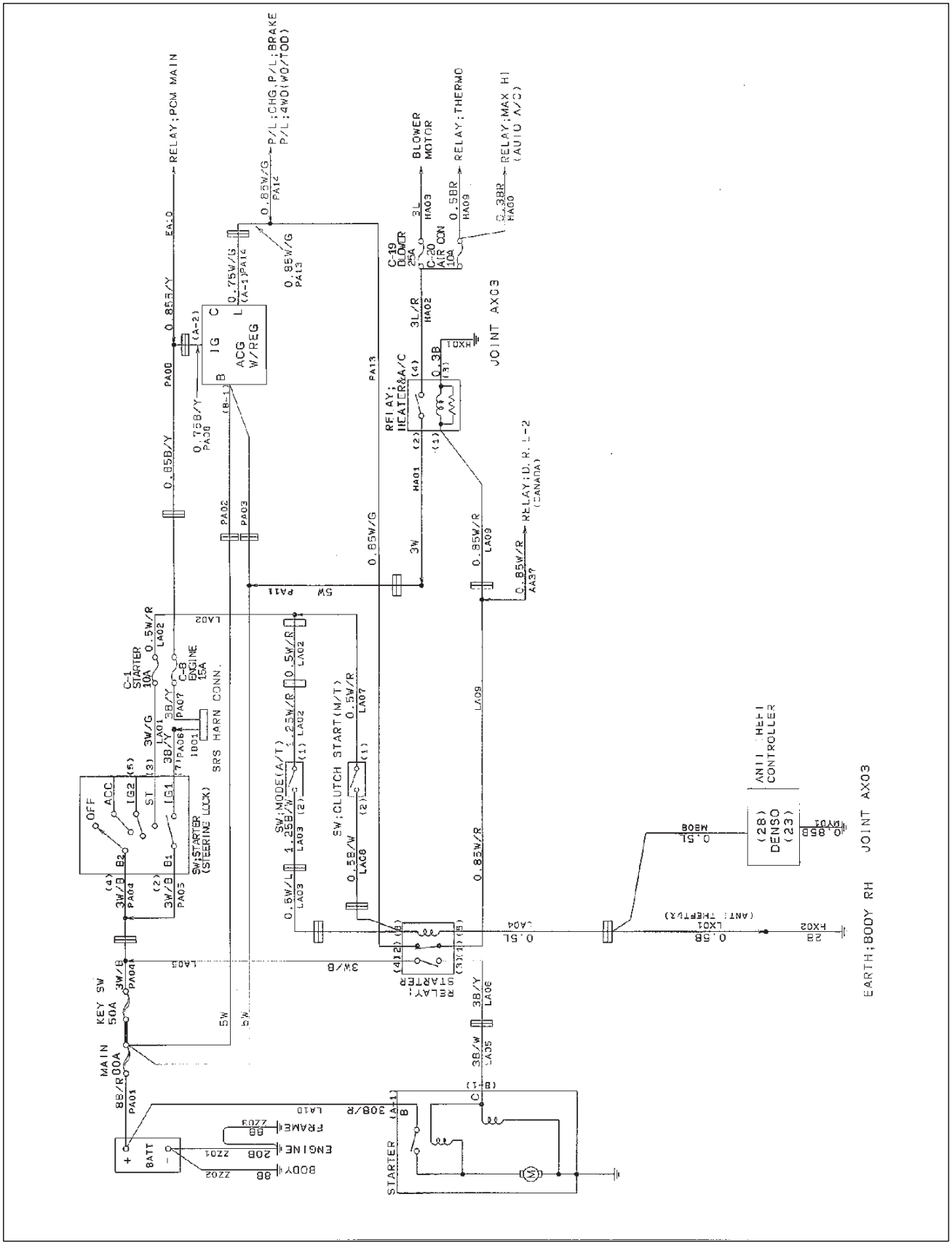

Downloaded from www.Manualslib.com manuals search engine

PCM–1

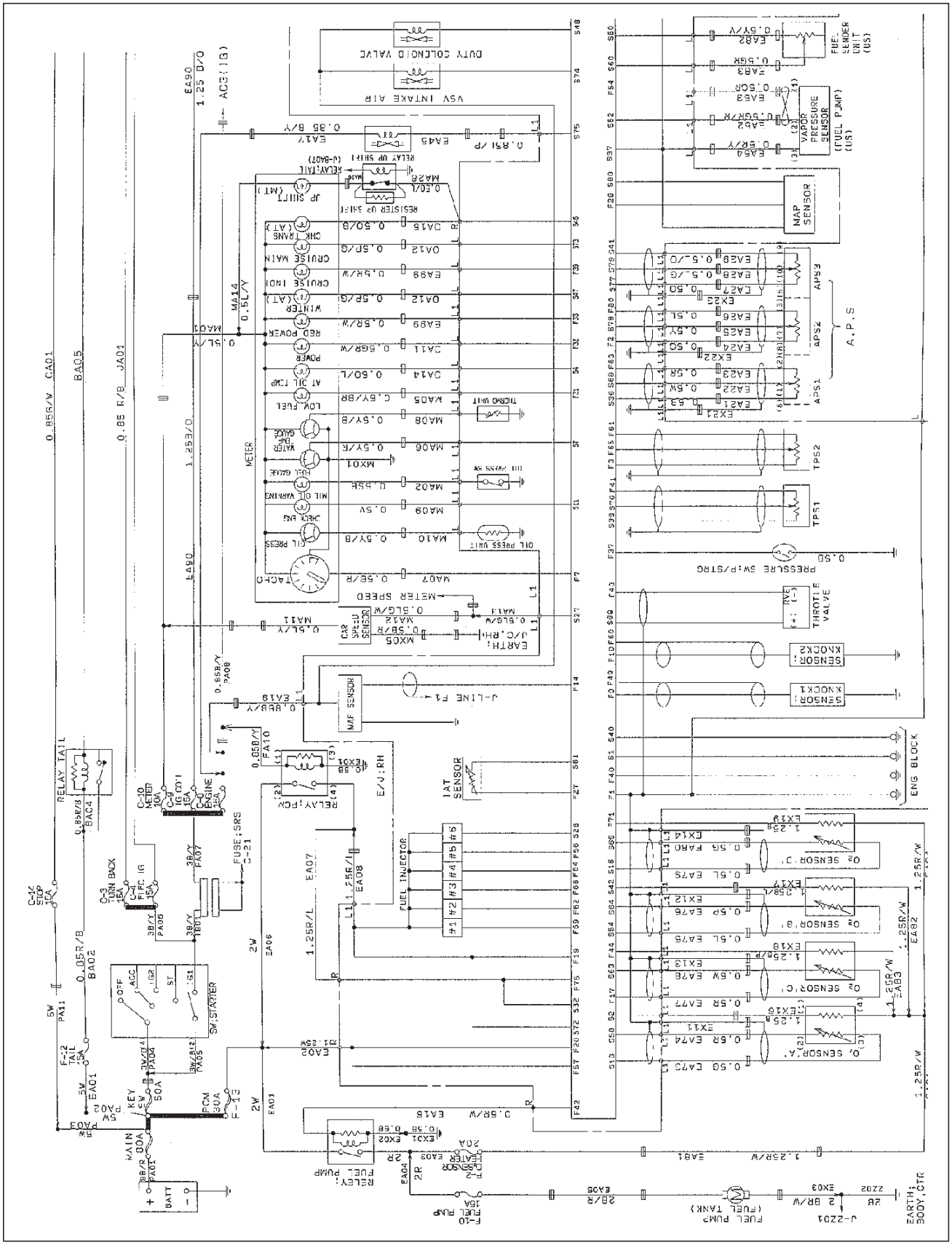
DUTY SOLENOID VALVE
VSV INTAKE AIR
RELAY UP SHIFT
RESISTOR UP SHIFT
UP SHIFT (MT)
CHK TRANS (AT)
CRUISE MAIN
CRUISE INDI
WINTER
RED POWER
POWER
AT OIL TEMP
LOW FUEL
WATER TEMP GAUGE
FUEL GAUGE
MIL OIL WARNING
CHECK ENG
OIL PRESS
TACHO
METER
TURBO UNIT
OIL PRESS SW
OIL PRESS UNIT
METER SPEED
CAR SPEED SENSOR
EARTH: U/C,RH
J-LINE F1
MAF SENSOR
JAT SENSOR
FUEL INJECTOR
#1 #2 #3 #4 #5 #6
E/J:RH
RELAY:PCM
FUSE:SRS C-21
RELAY TAIL
C-10 METER 10A
C-9 IG 15A
C-11 ECU-IG 15A
C-3 TURN BACK 15A
C-4 FLPC IG 15A
C-16 STOP 15A
F-2 TAIL 15A
SW:STARTER
OFF ACC IG2 ST IG1
KEY SW 50A
MAIN 80A
PCM 30A
F-1 B
SW 30A
BATT
RELAY: FUEL PUMP
F-2 HEATER SENSOR 20A
F-10 FUEL PUMP 15A
FUEL PUMP (FUEL TANK)
EARTH: BODY, CTR
J-2204
MAP SENSOR
VAPOR PRESSURE SENSOR (FUEL PUMP) (US)
FUEL SENDER UNIT (US)
A.P.S
APS1
APS2
APS3
TPS1
TPS2
PRESSURE SW:P/STRG
THROTTLE VALVE
SENSOR: KNOCK1
SENSOR: KNOCK2
ENG BLOCK
O2 SENSOR:A'
O2 SENSOR:B'
O2 SENSOR:C'
O2 SENSOR:D'
0.85R/W CA01
0.85 R/B JA01
0.85R/B BA02
0.85R/B BA04
1.25B/O
0.5L/Y
0.5R/W EA15
1.25R/W EA01
1.25R/W EA02
1.25R/W EA03
1.25R/W EA82
1.25R/W EA83
1.25R/W EA91
2W EA06
2W EA07
2W EA08
2R EA04
2B/R EA05
2B BR/W
2 BR/W
2B EX03
2202
2W PA11
5W PA03
5W PA01
3W/R PA04
3W/R PA05
3B/Y PA06
3B/Y PA07
3B/Y TB01
0.85B/Y EA19
0.85B/Y FA10
0.85R/Y EA10
0.5L/Y MA11
0.5L/Y MA01
0.5L/Y MA14
0.5R/W EA45
0.35 B/Y EA17
1.25 B/O EA90
ACG(IG)
EA90
EA80
EA81
EA82
EA83
EA84
EA21
EA22
EA23
EA24
EA25
EA26
EA27
EA28
EA29
EX21
EX22
EX23
EX24
EX25
EX26
EX27
EX28
EX29
EX30
EX31
EX32
EX33
EX34
EX35
EX36
EX37
EX38
EX39
EX40
EX41
EX42
EX43
EX44
EX45
EX46
EX47
EX48
EX49
EX50
EX51
EX52
EX53
EX54
EX55
EX56
EX57
EX58
EX59
EX60

PCM–2

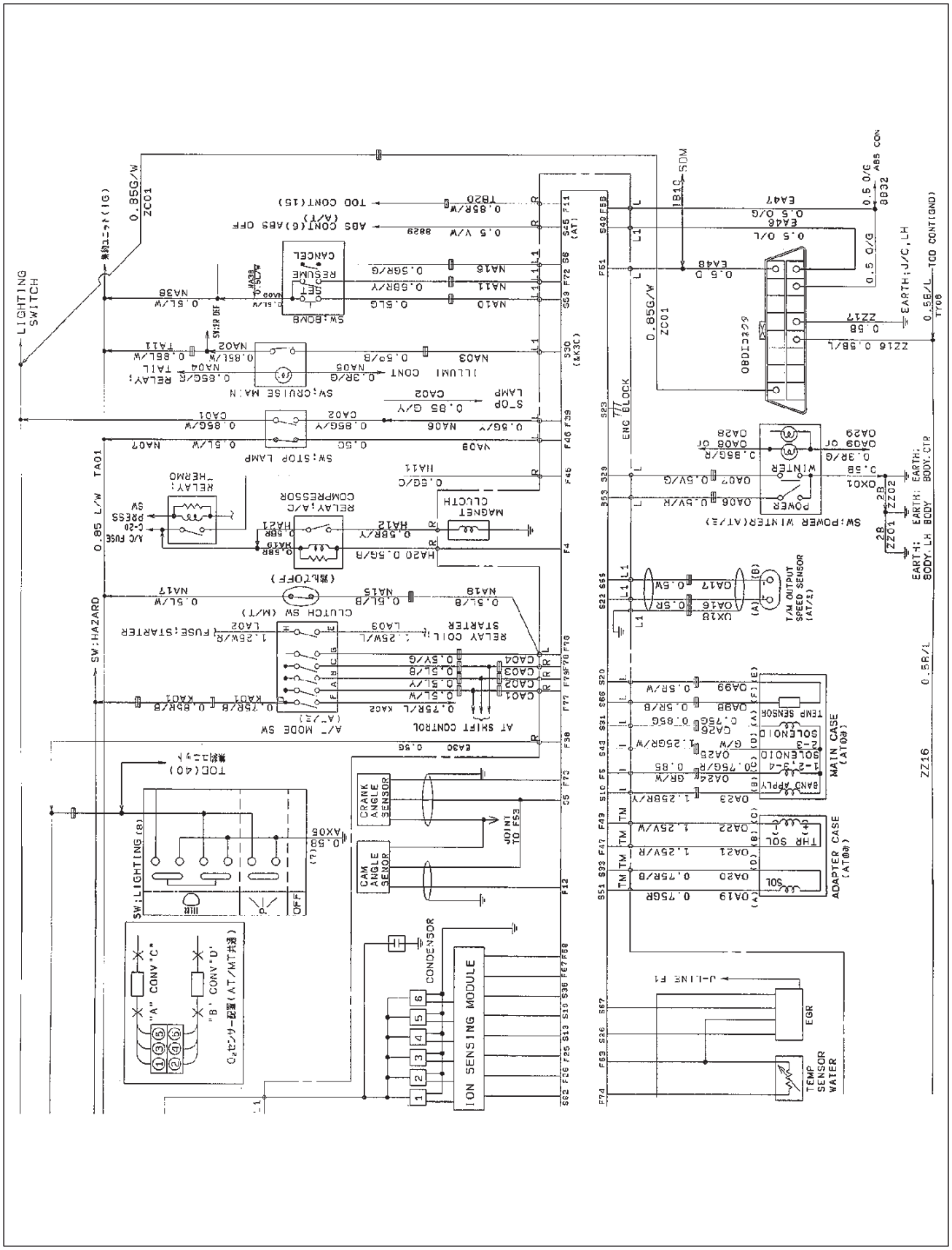

Downloaded from www.Manualslib.com manuals search engine

Headlight and Fog Light

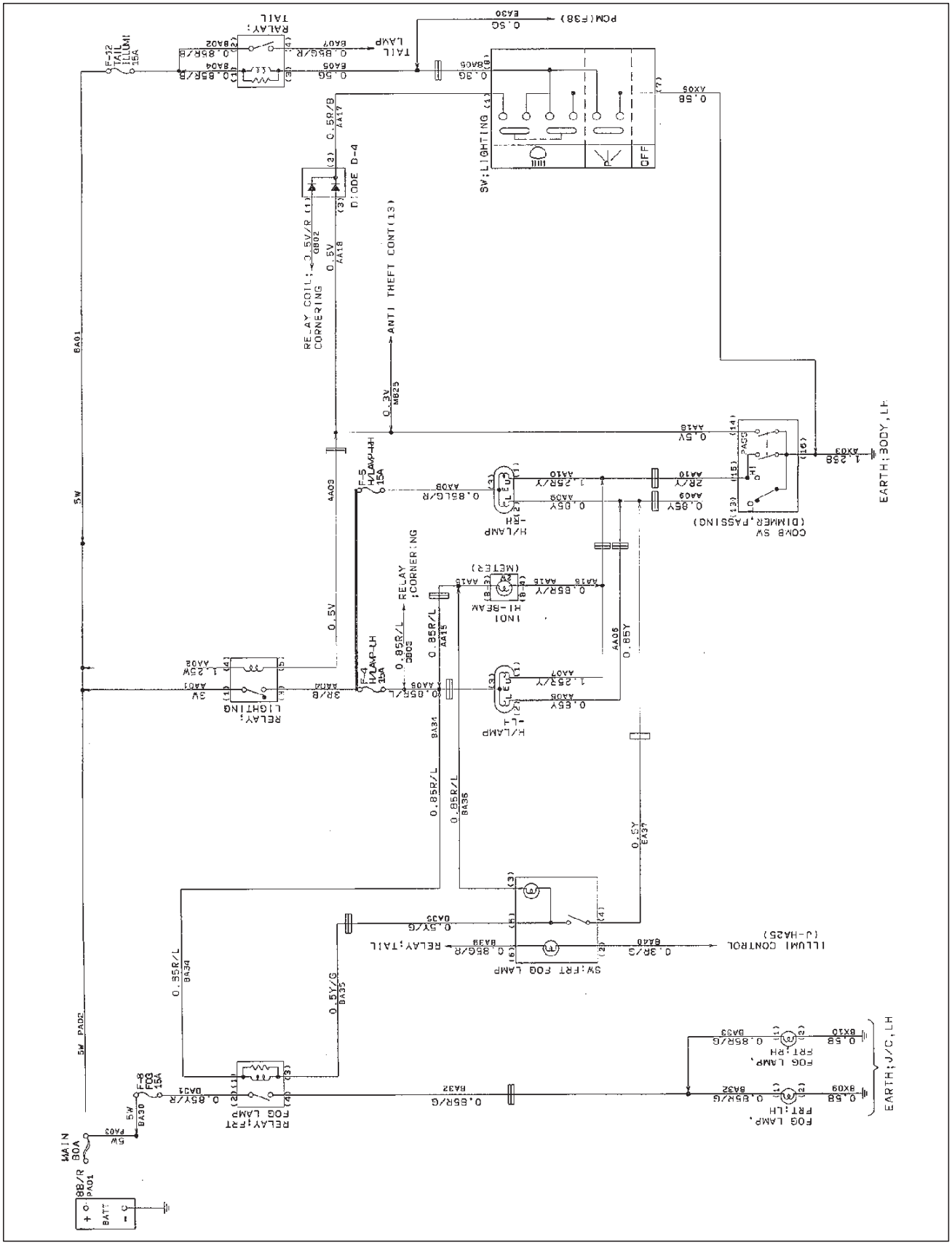

Downloaded from www.Manualslib.com manuals search engine

Illumination Light

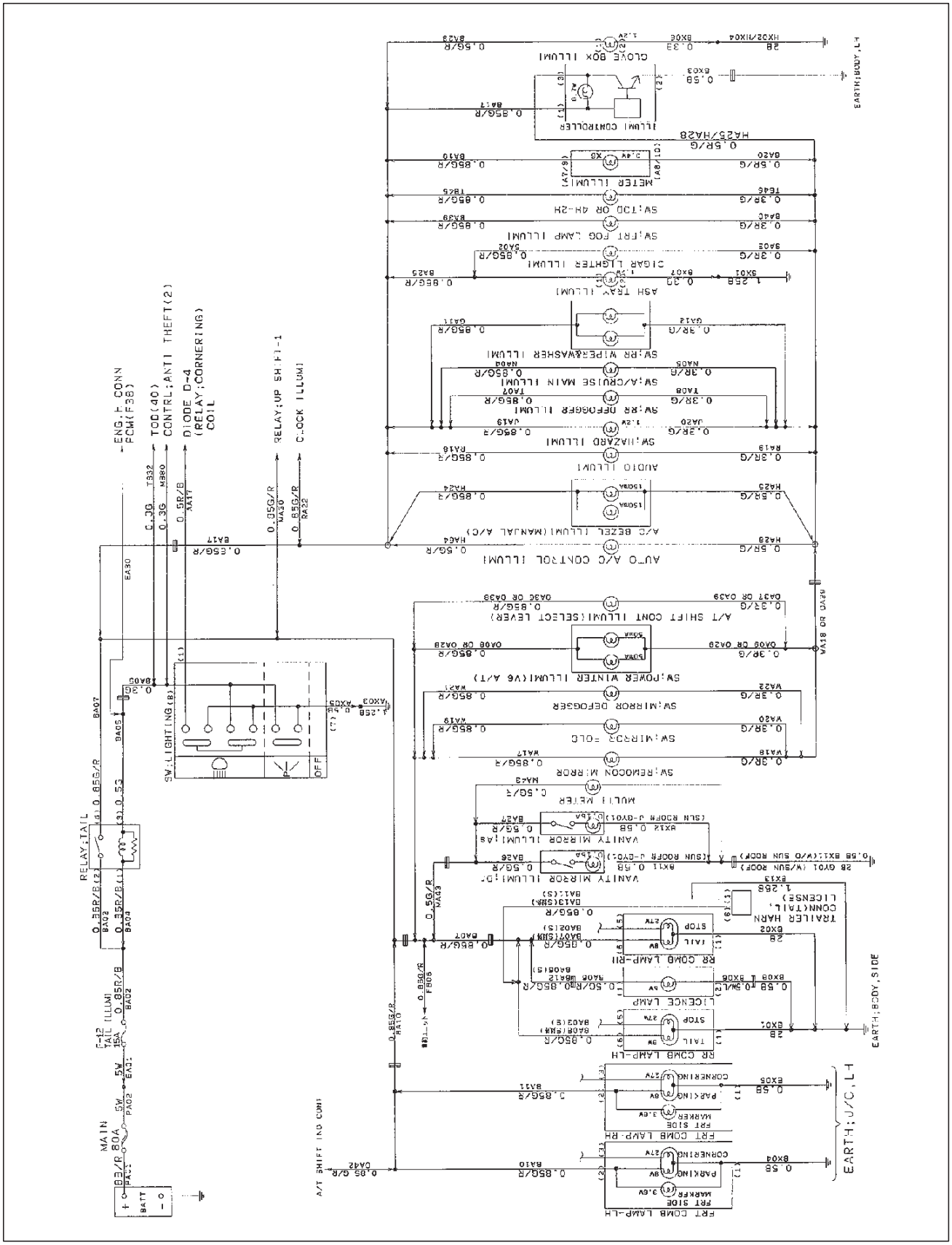

Downloaded from www.Manualslib.com manuals search engine

Turn Signal Light and Hazard Warning Light

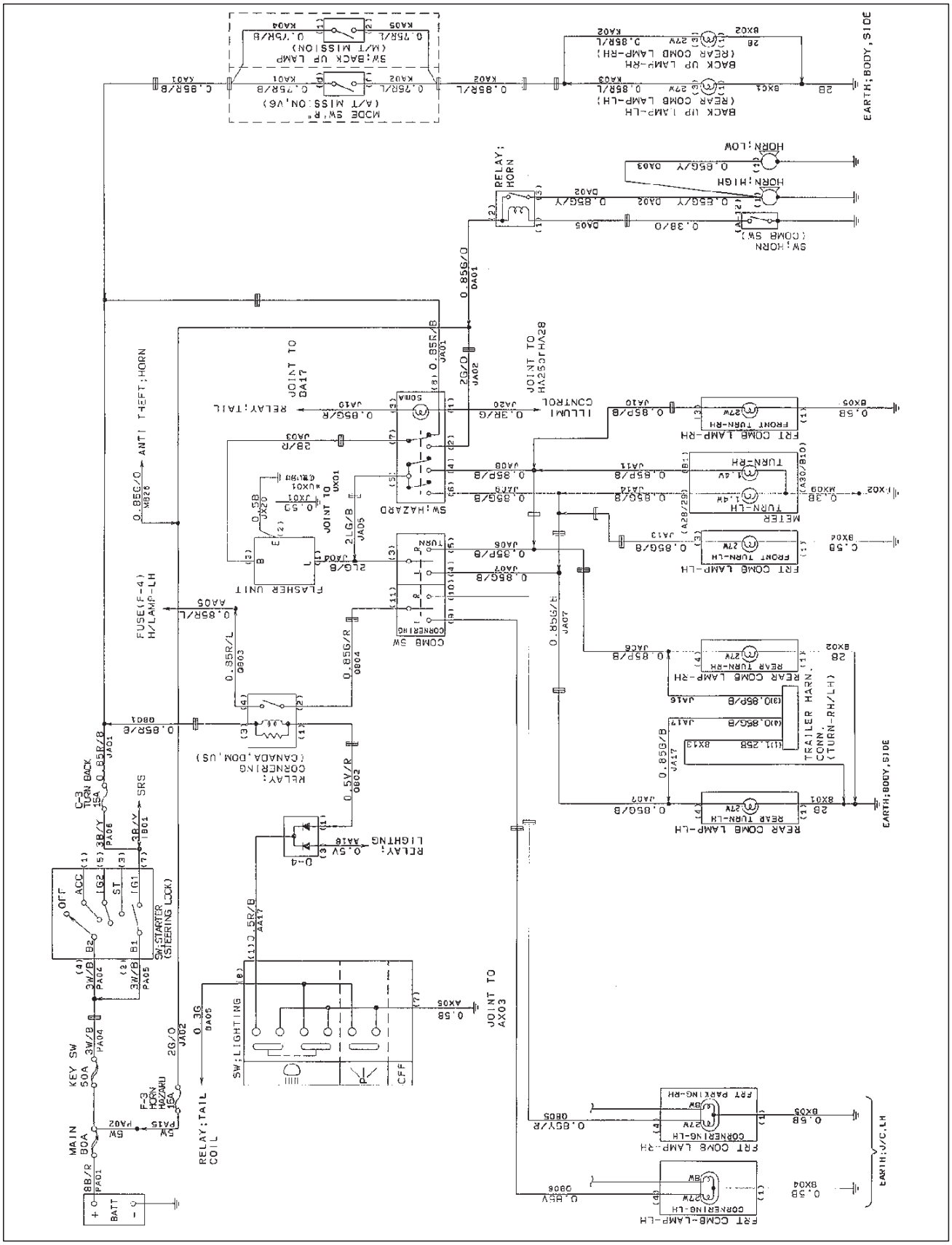

Downloaded from www.Manualslib.com manuals search engine

Stoplight and Rear Defogger

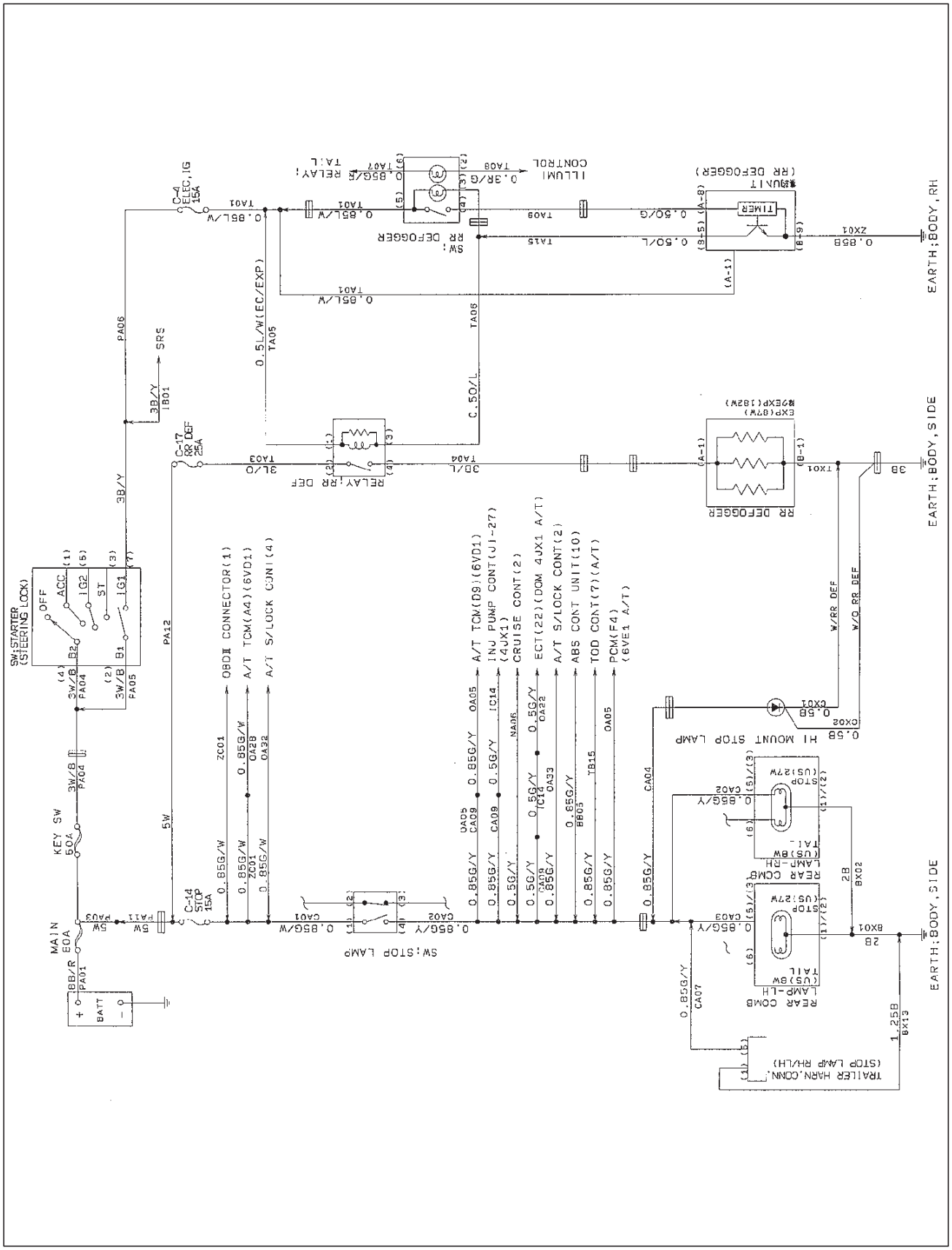

Downloaded from www.Manualslib.com manuals search engine

Dome Light, Courtesy Light, Stop Light and Luggage Room Light

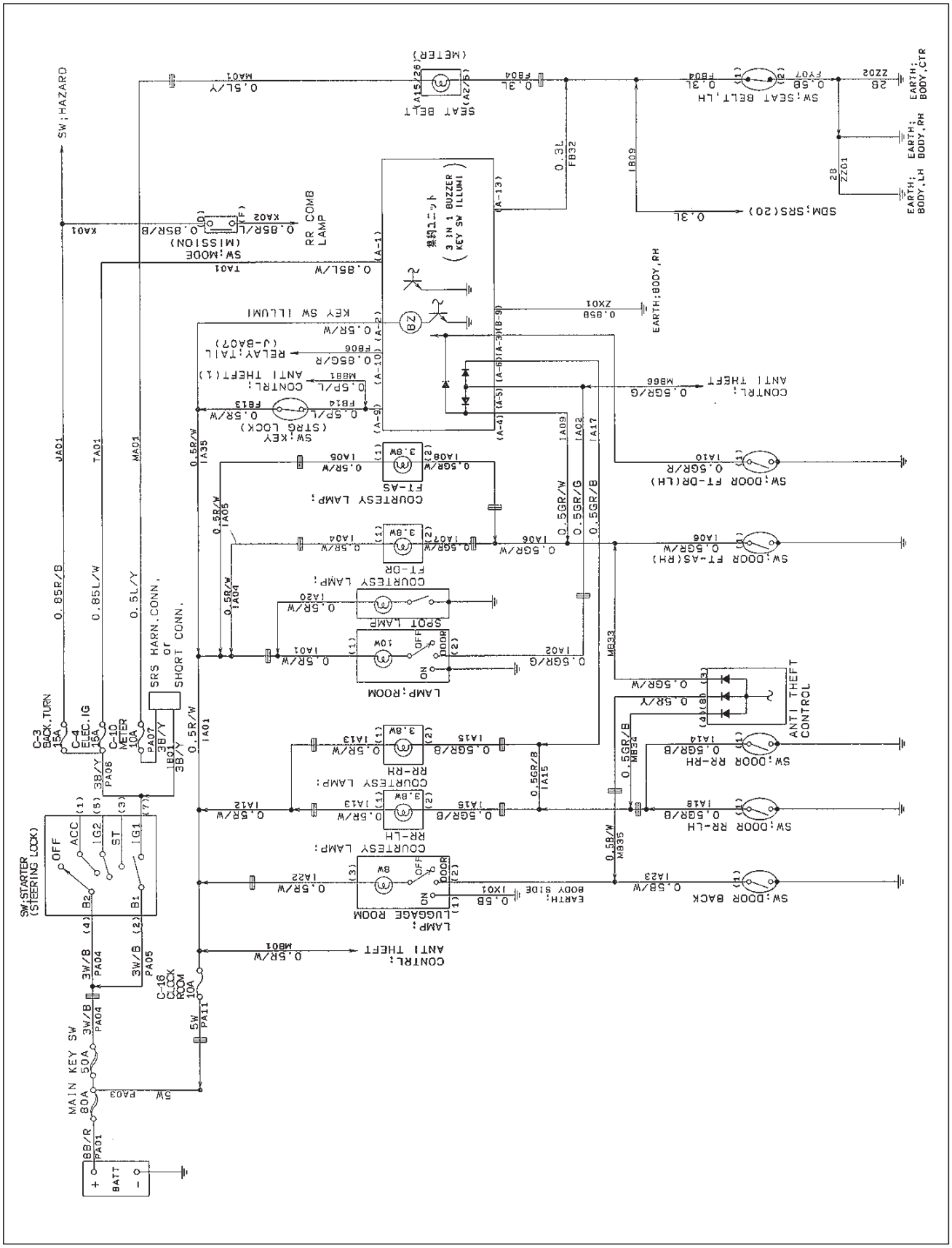

Downloaded from www.Manualslib.com manuals search engine

Door Lock (W/ Keyless Entry)

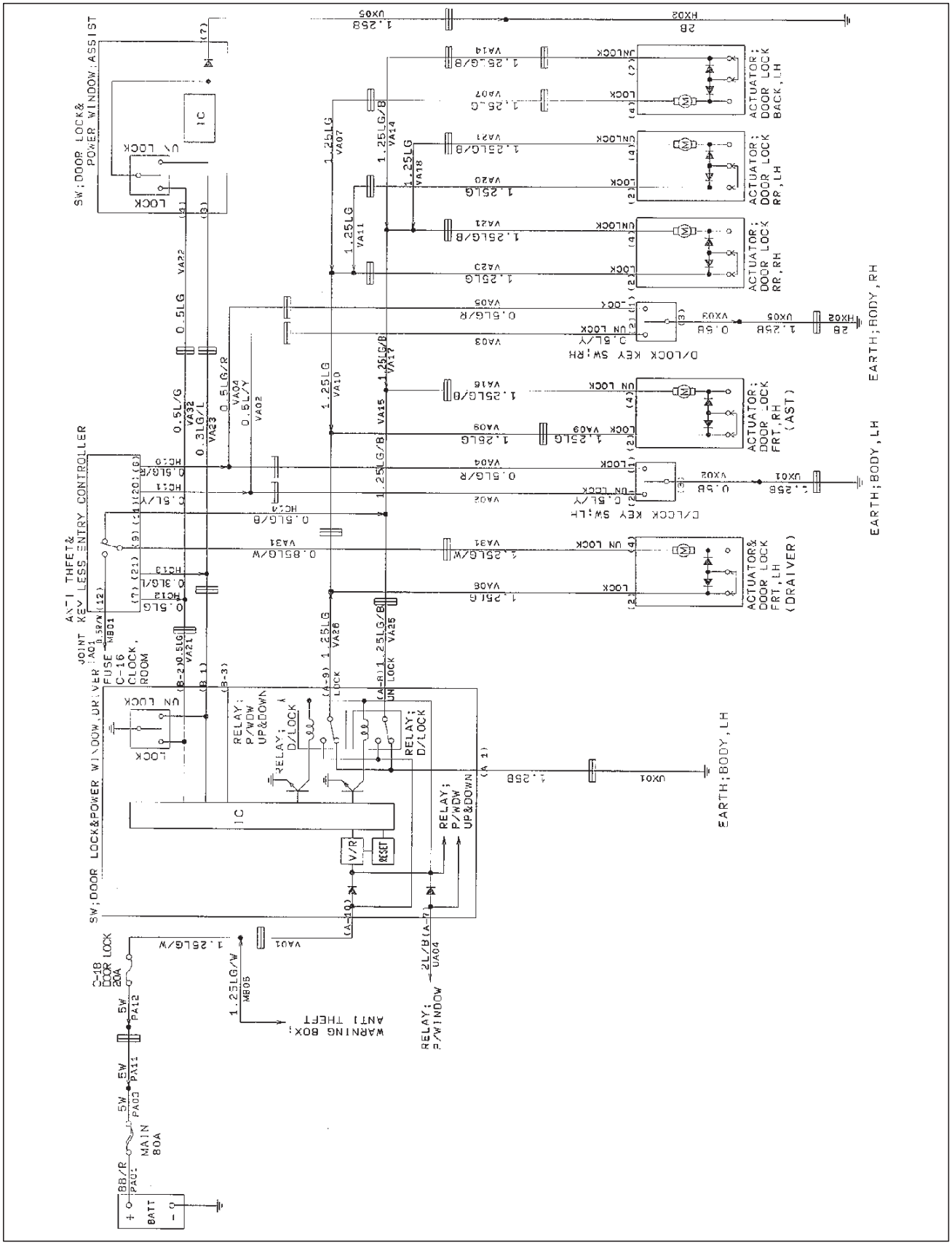

Downloaded from www.Manualslib.com manuals search engine

Door Lock (W/O Keyless Entry)

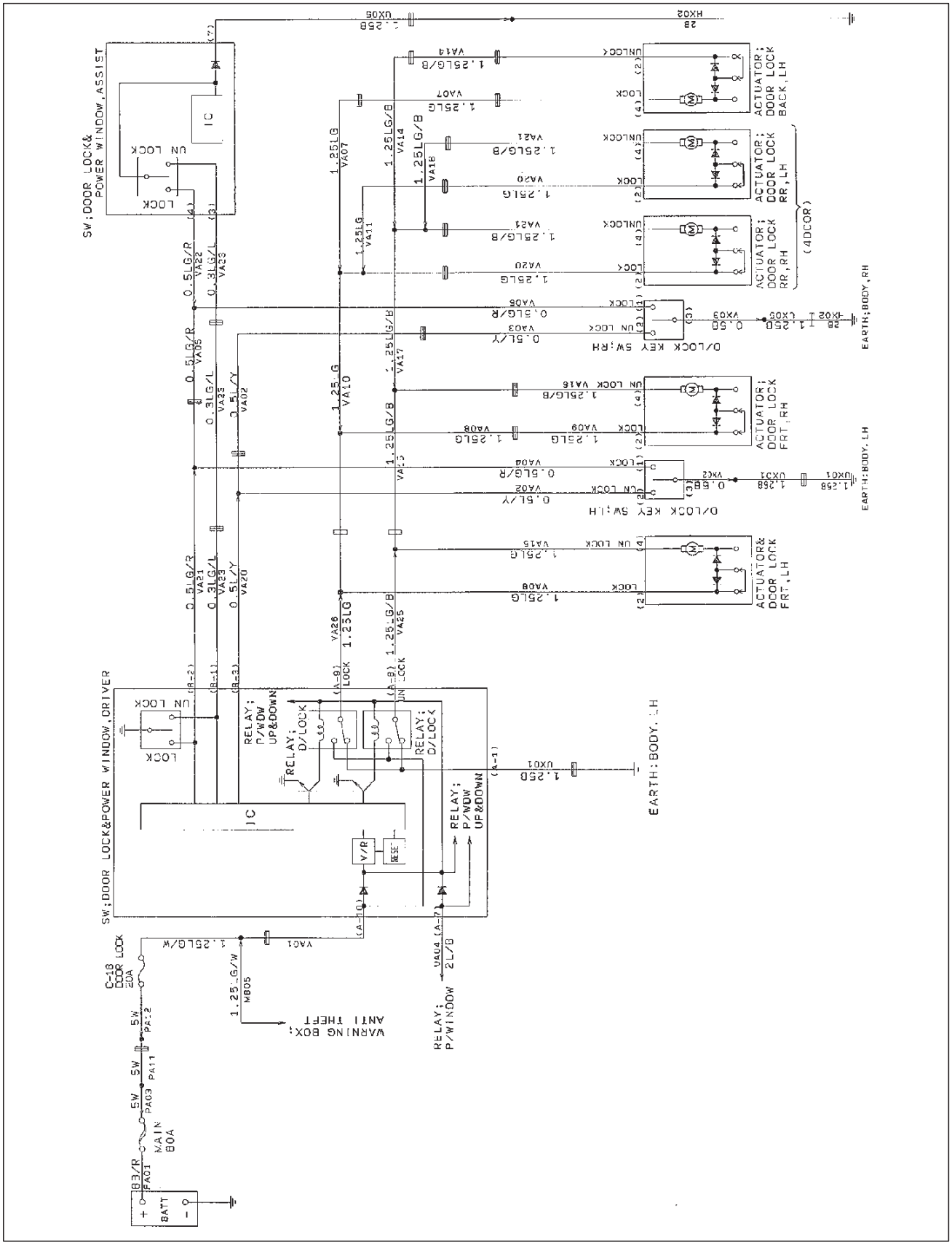

Downloaded from www.Manualslib.com manuals search engine

Power Window

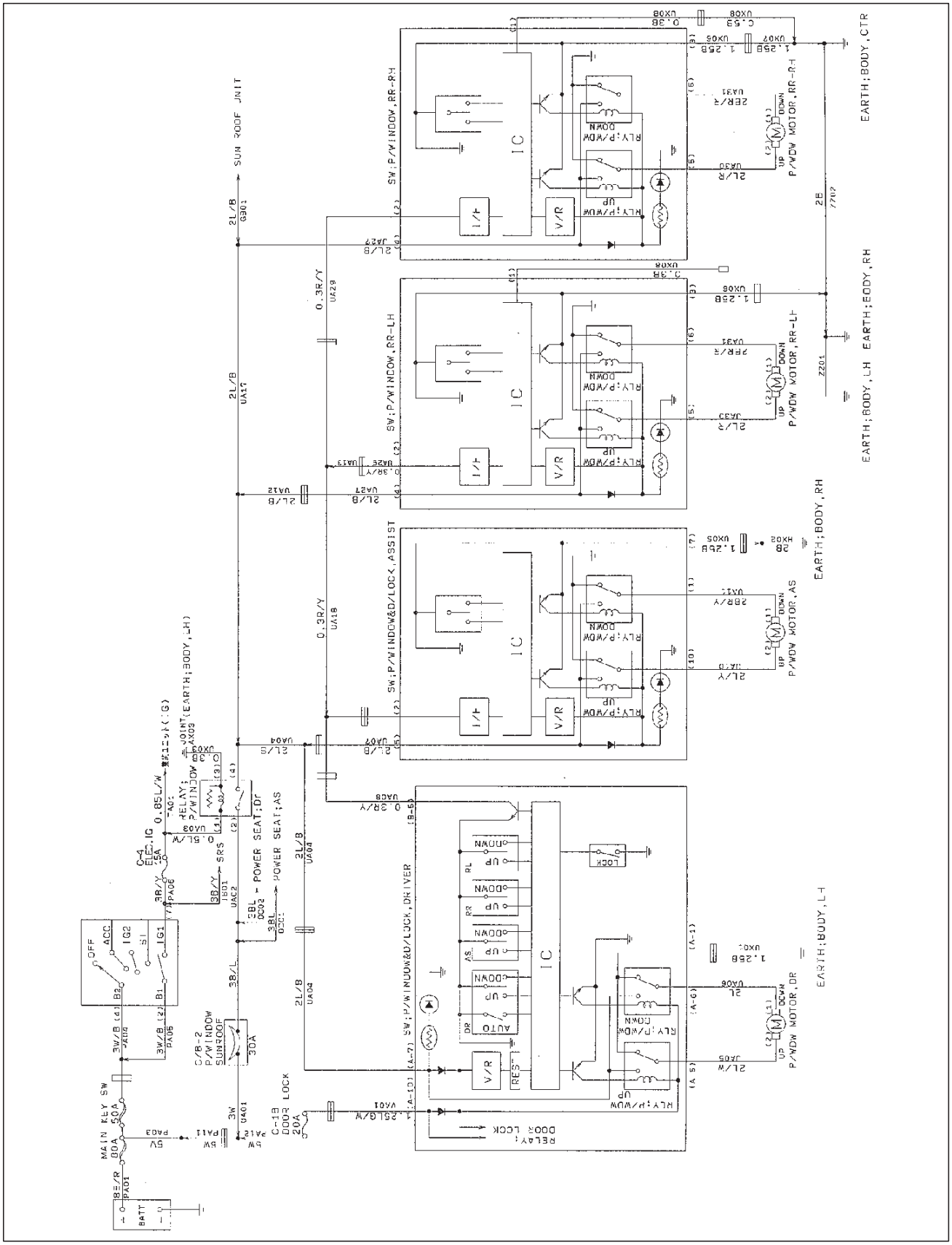

Downloaded from www.Manualslib.com manuals search engine

Cruise Control

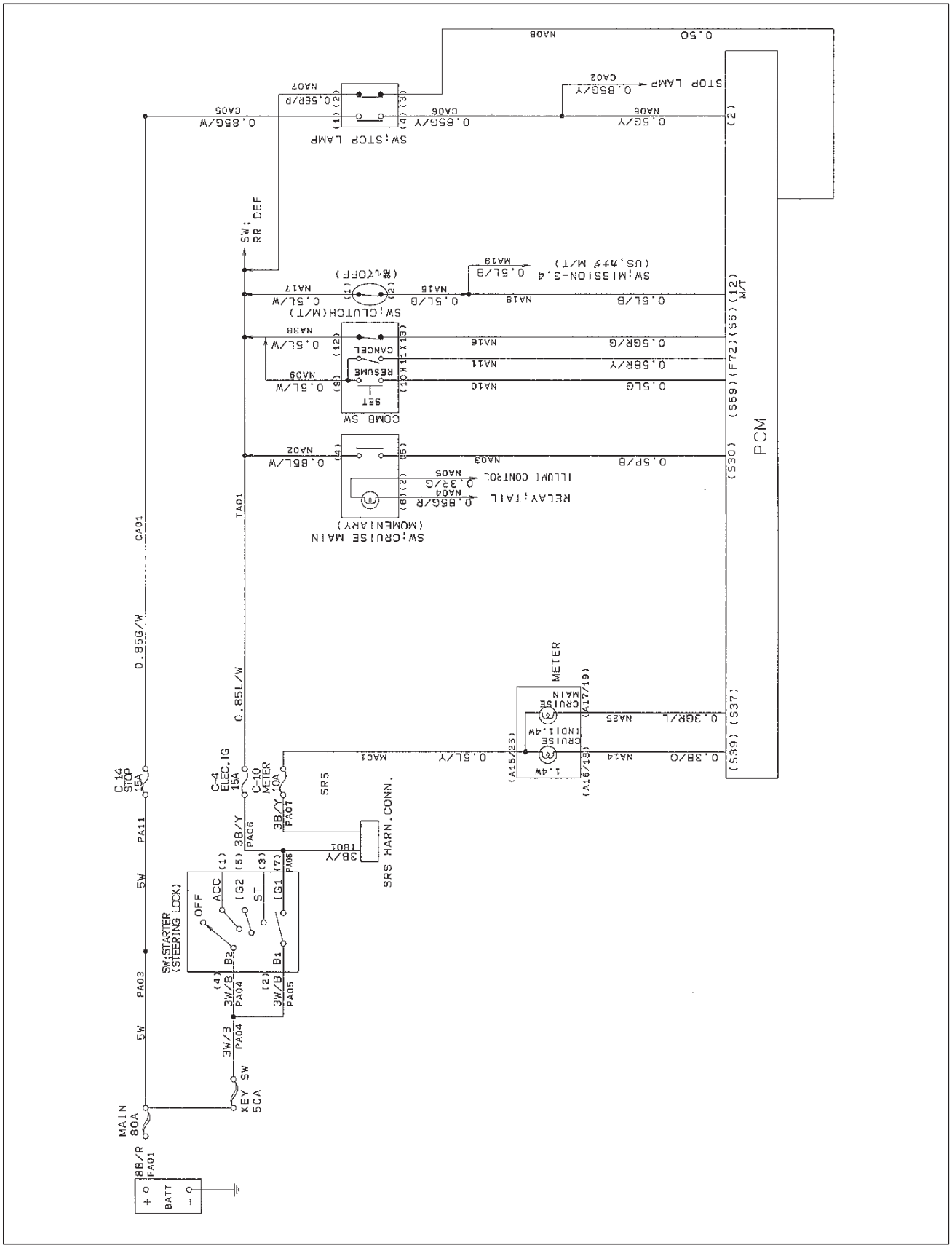

Downloaded from www.Manualslib.com manuals search engine

ABS–1

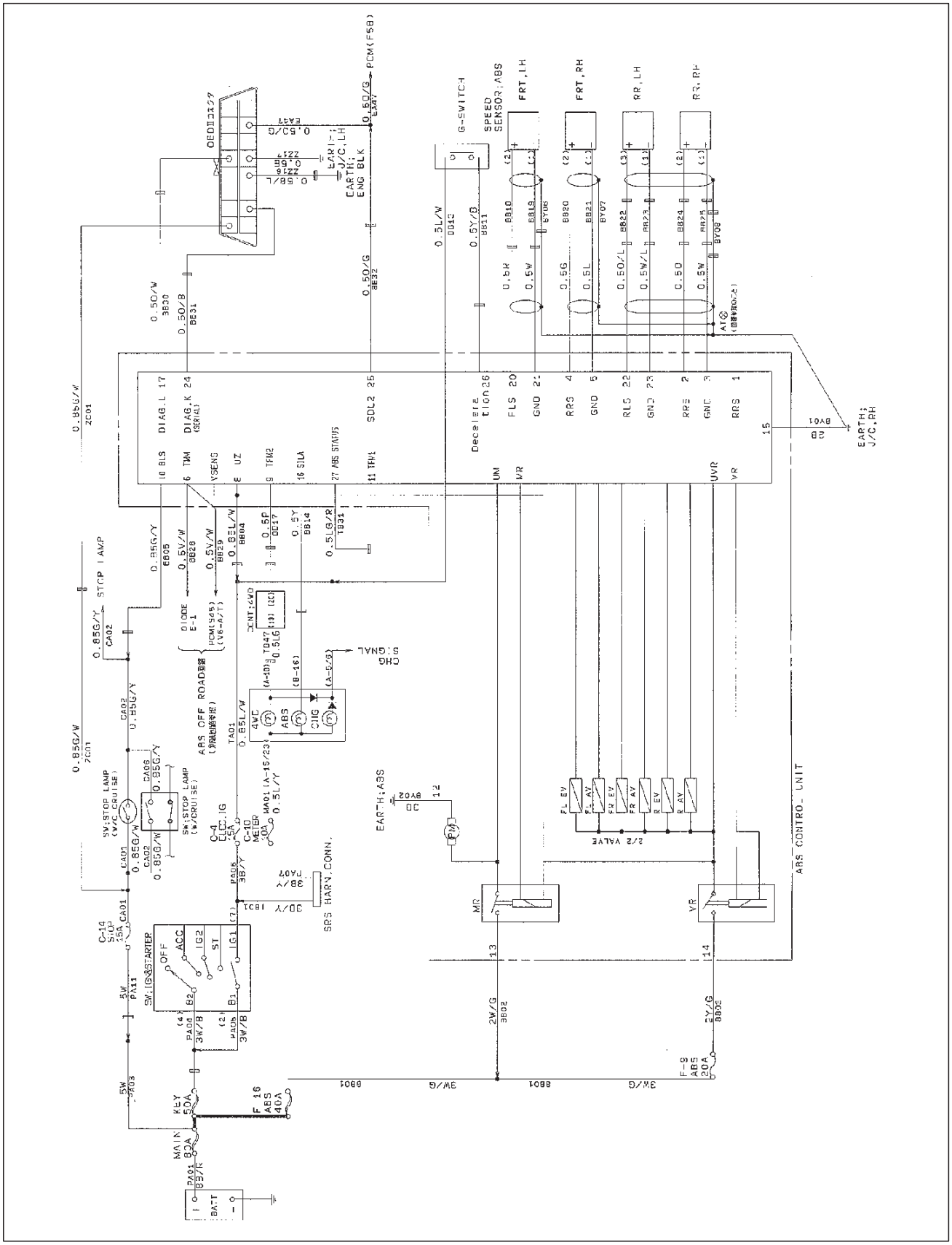

Downloaded from www.Manualslib.com manuals search engine

ABS–2

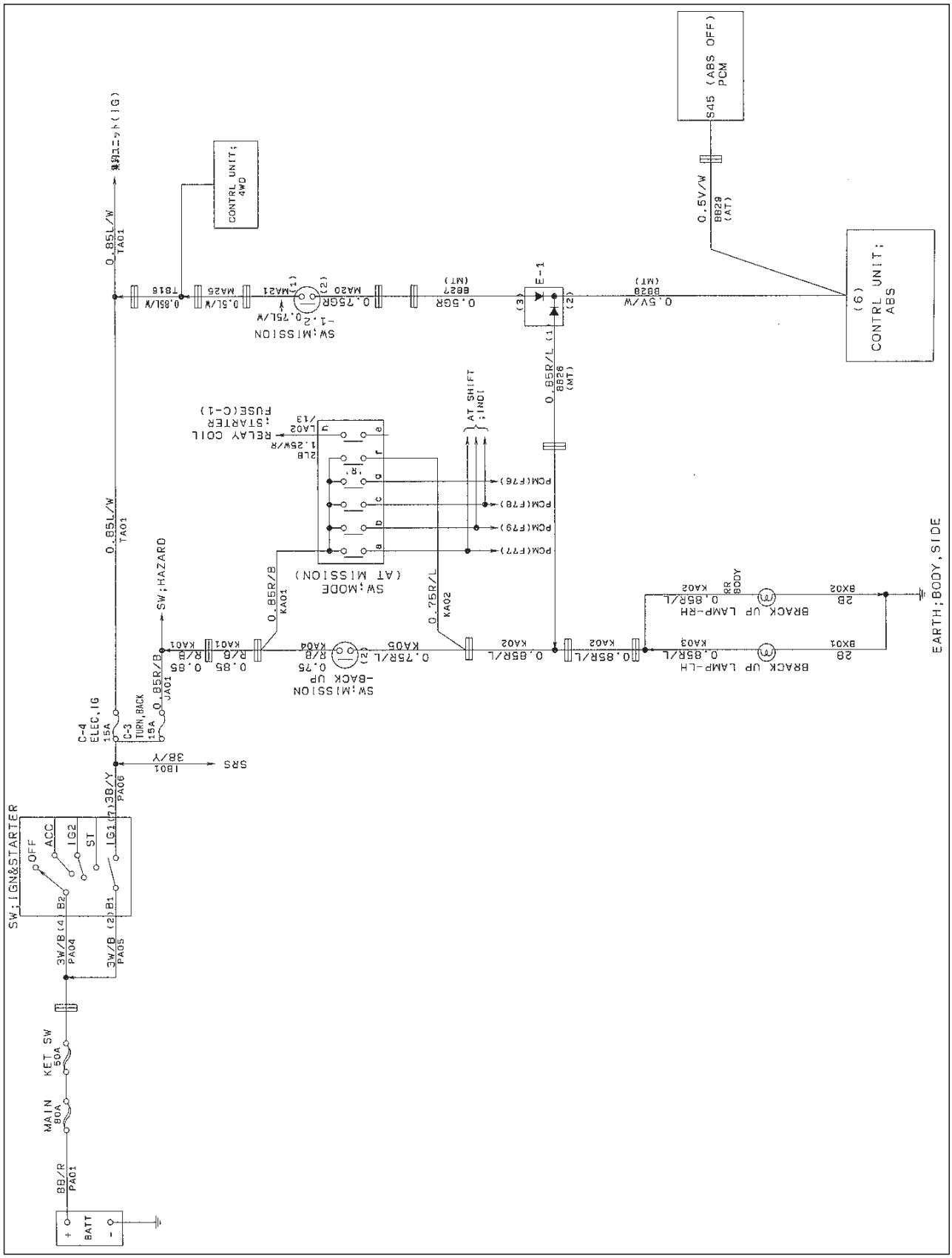

Downloaded from www.Manualslib.com manuals search engine

A/T Shift Lock

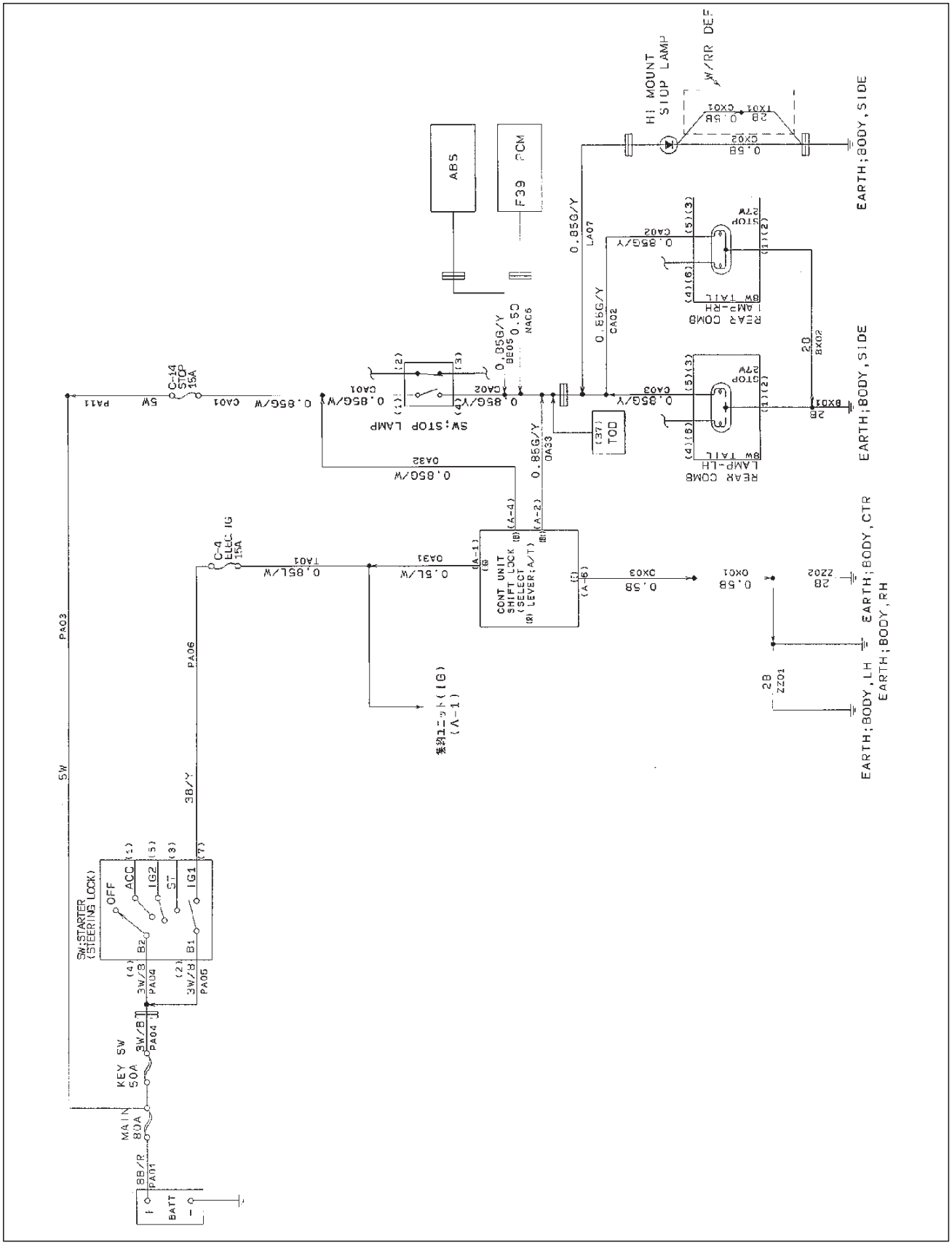

Downloaded from www.Manualslib.com manuals search engine

Anti–theft W/ Keyless Entry

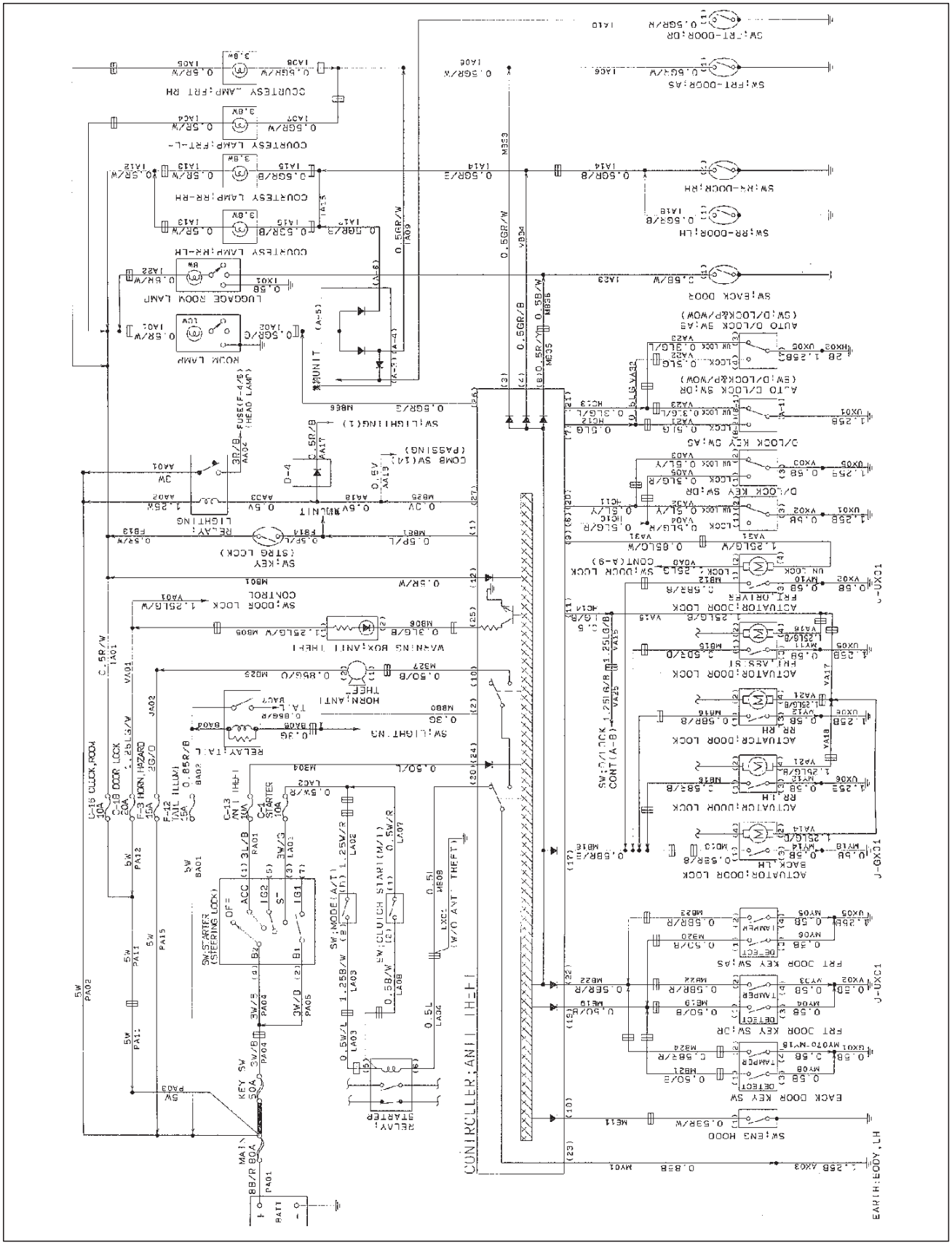

Downloaded from www.Manualslib.com manuals search engine

Windshield Wiper and Washer

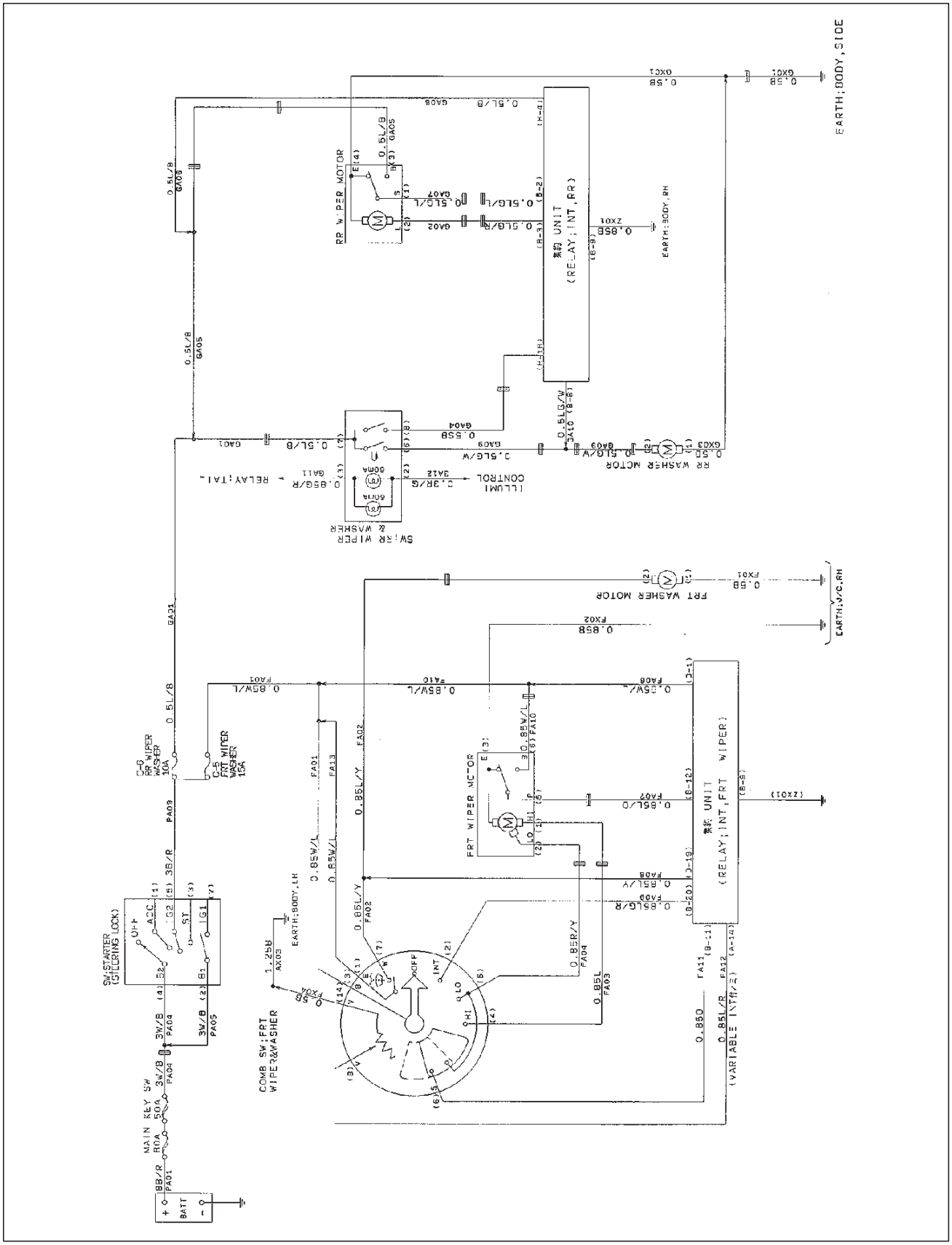

Downloaded from www.Manualslib.com manuals search engine

Audio

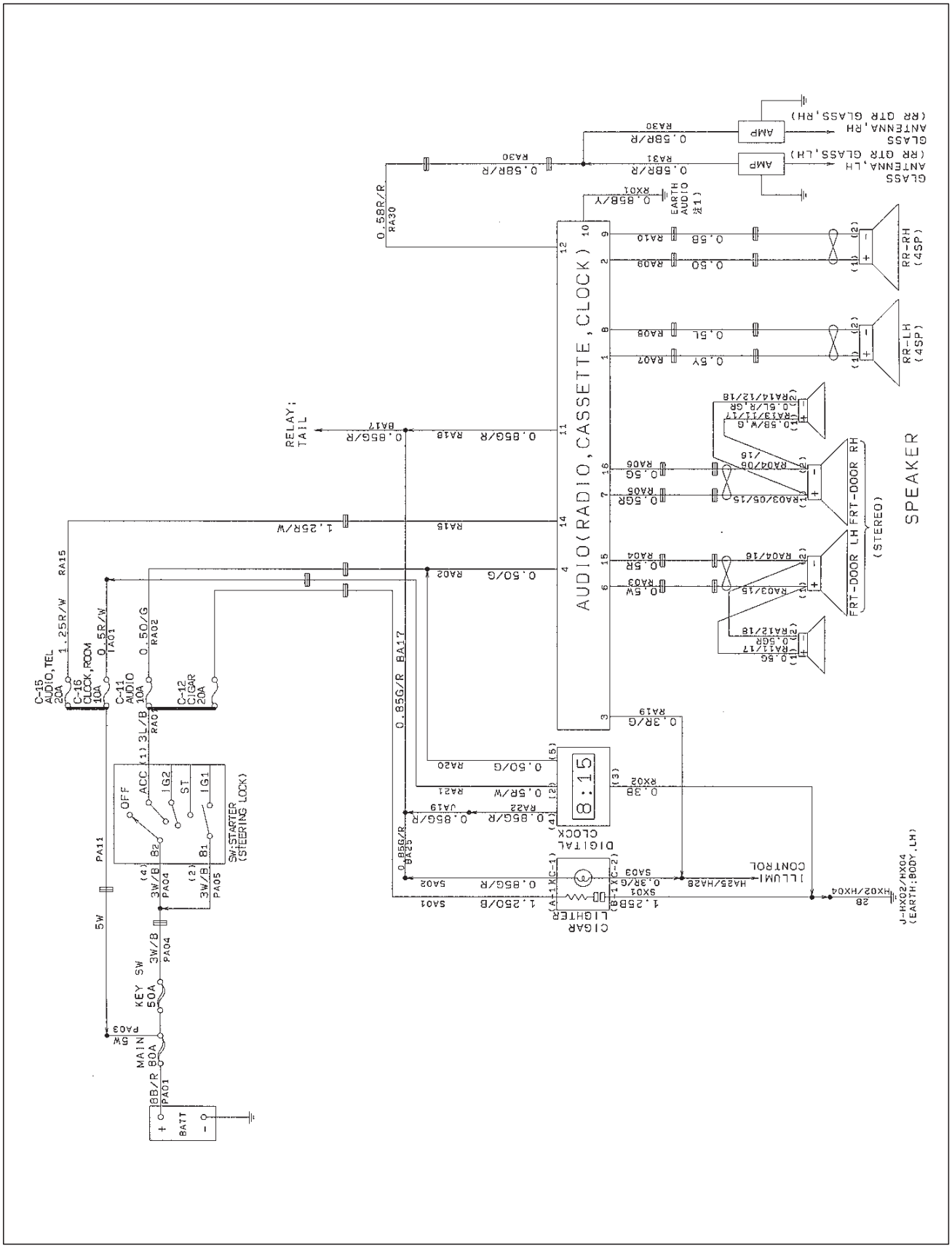

Downloaded from www.Manualslib.com manuals search engine

Door Mirror

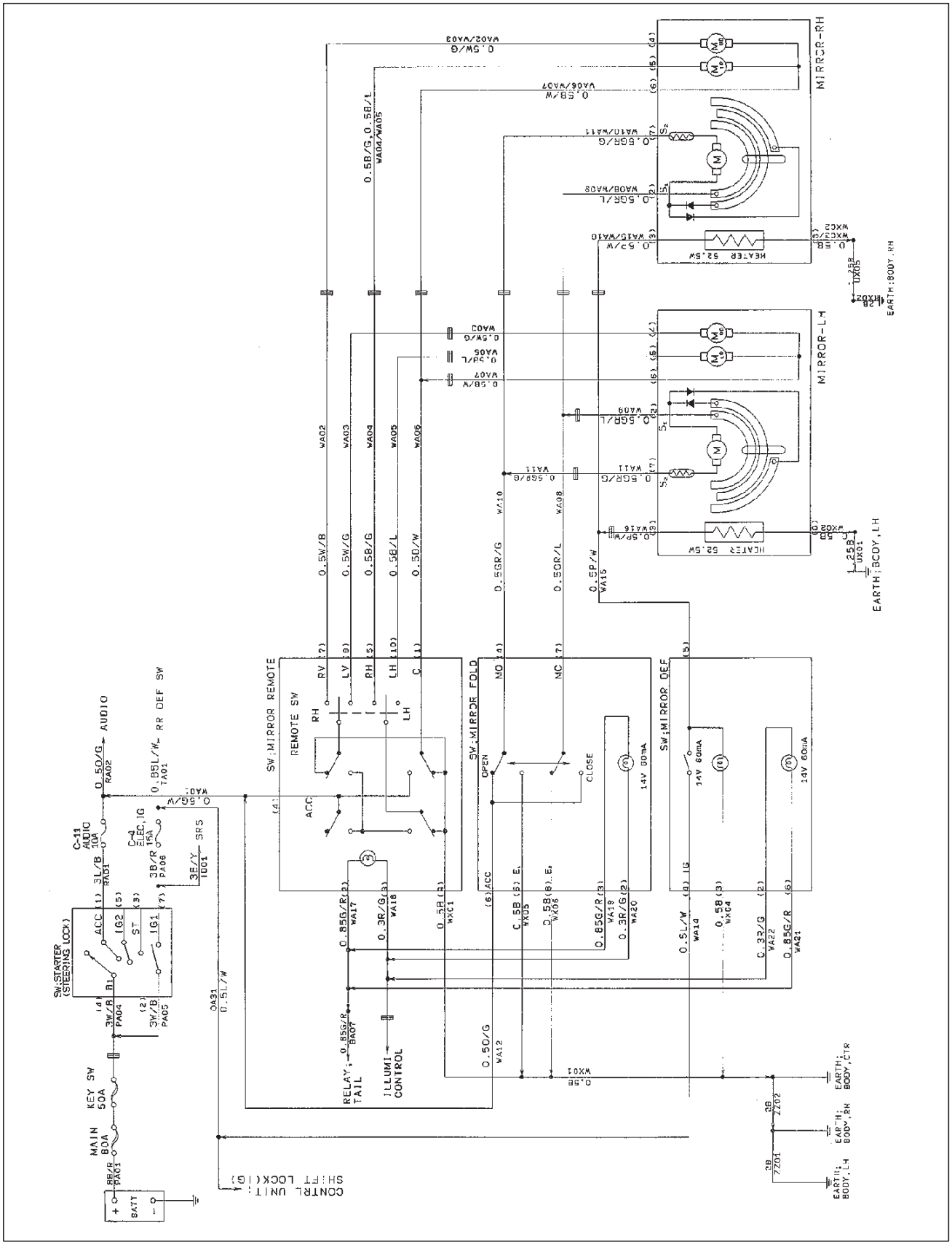

Downloaded from www.Manualslib.com manuals search engine

Meter (W/ T,O,D)

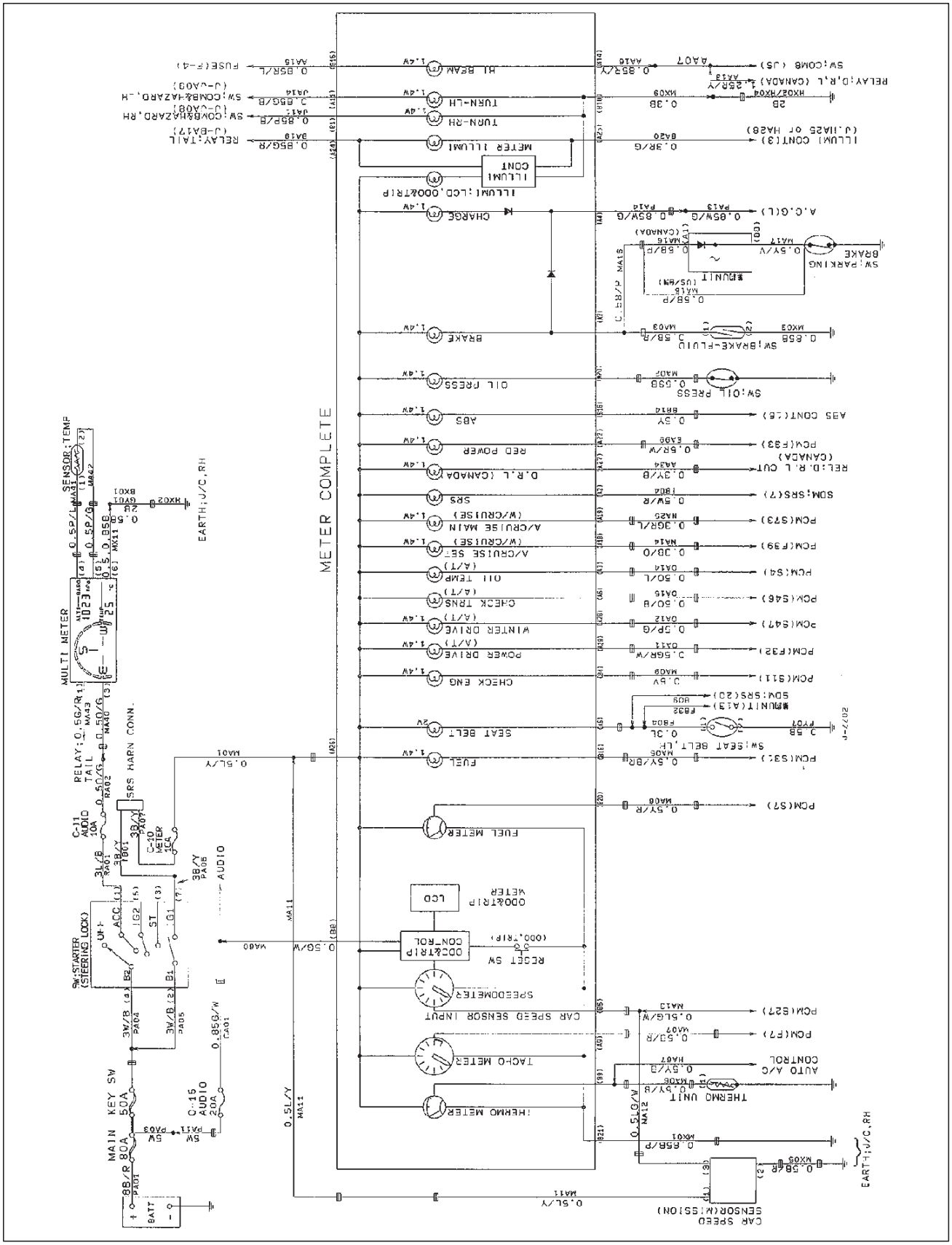

Downloaded from www.Manualslib.com manuals search engine

Meter (W/O T,O,D)

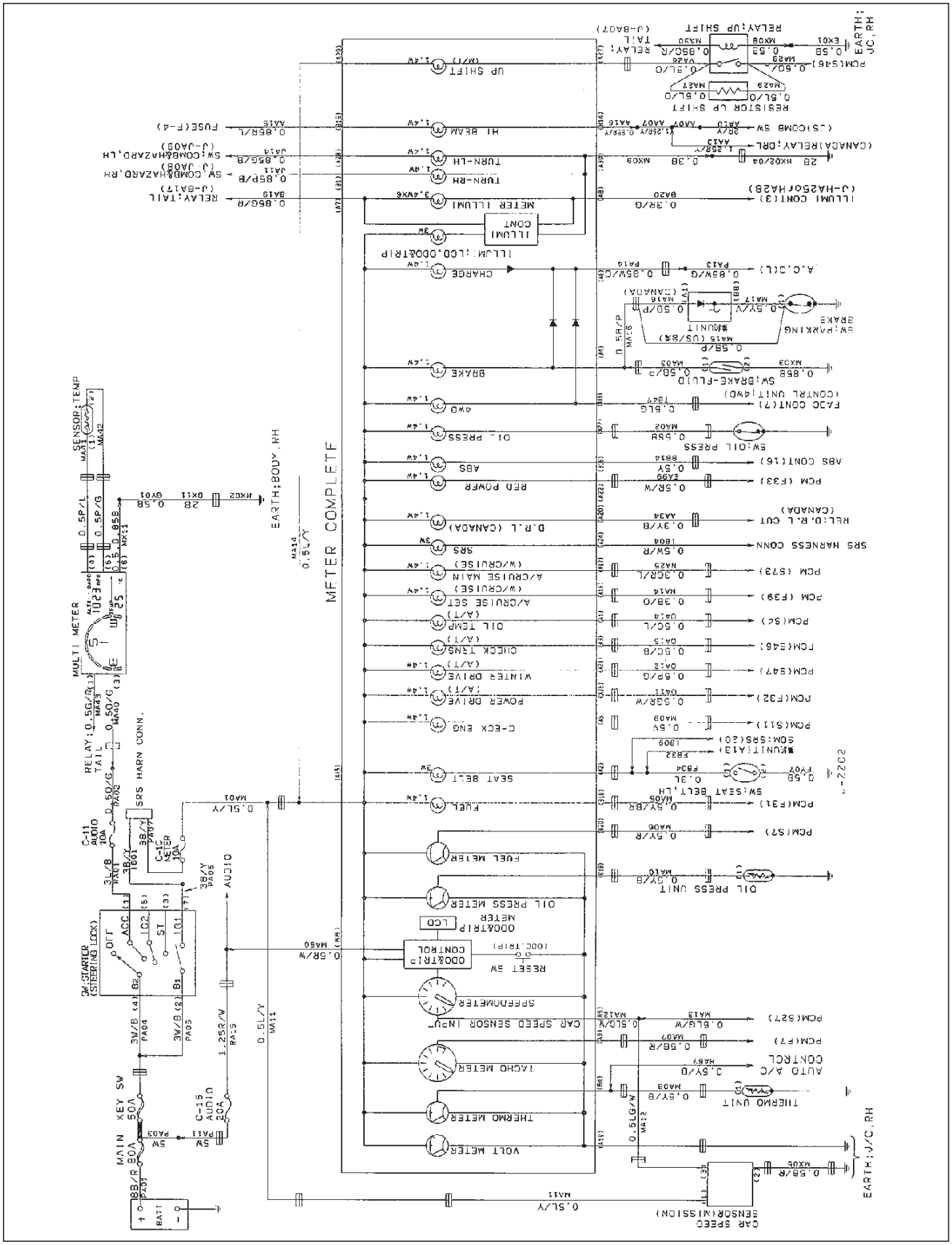

Downloaded from www.Manualslib.com manuals search engine

A/T Shift Indicator

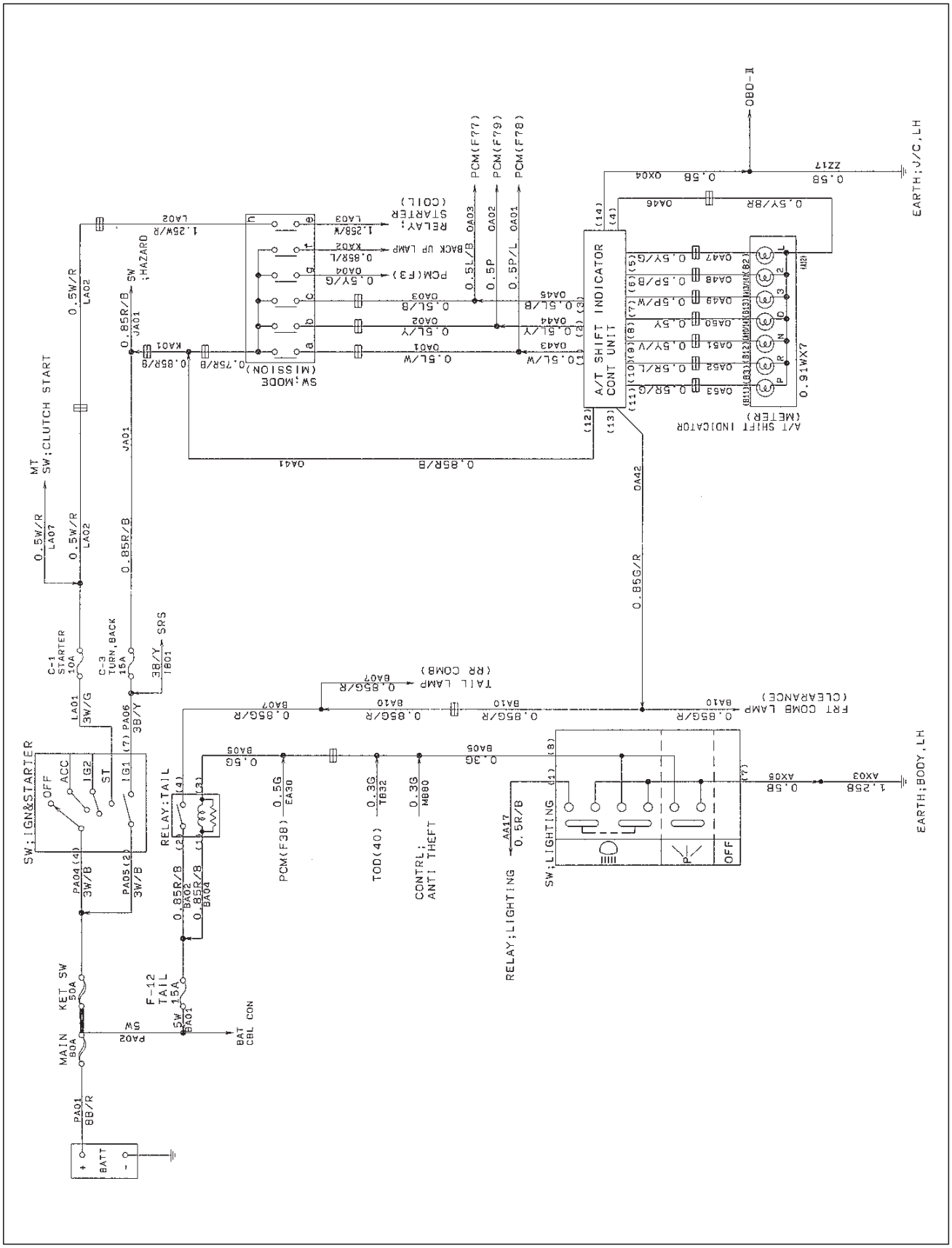

Downloaded from www.Manualslib.com manuals search engine

Air Conditioning (Manual)

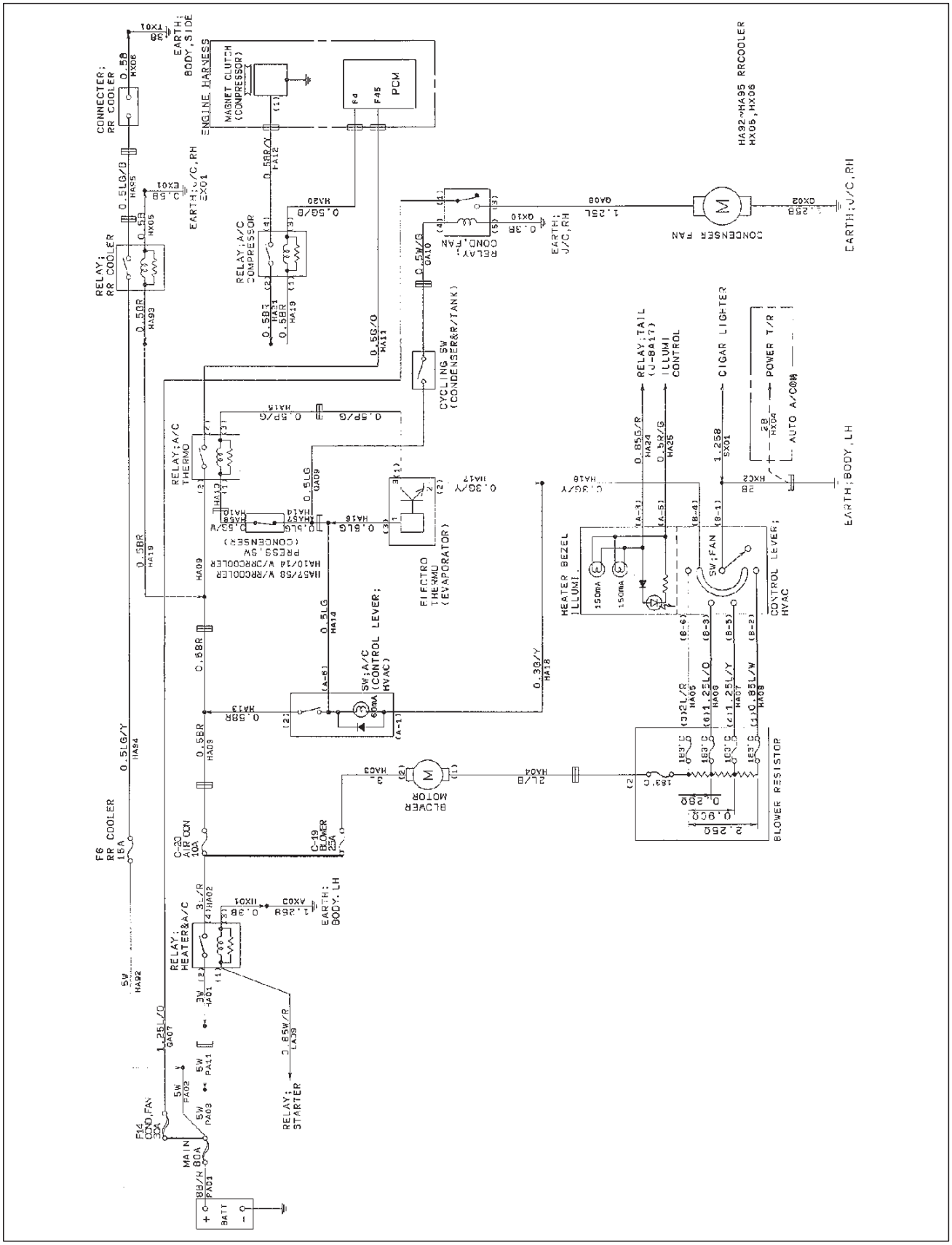

Downloaded from www.Manualslib.com manuals search engine

Air Conditioning (Auto)–1

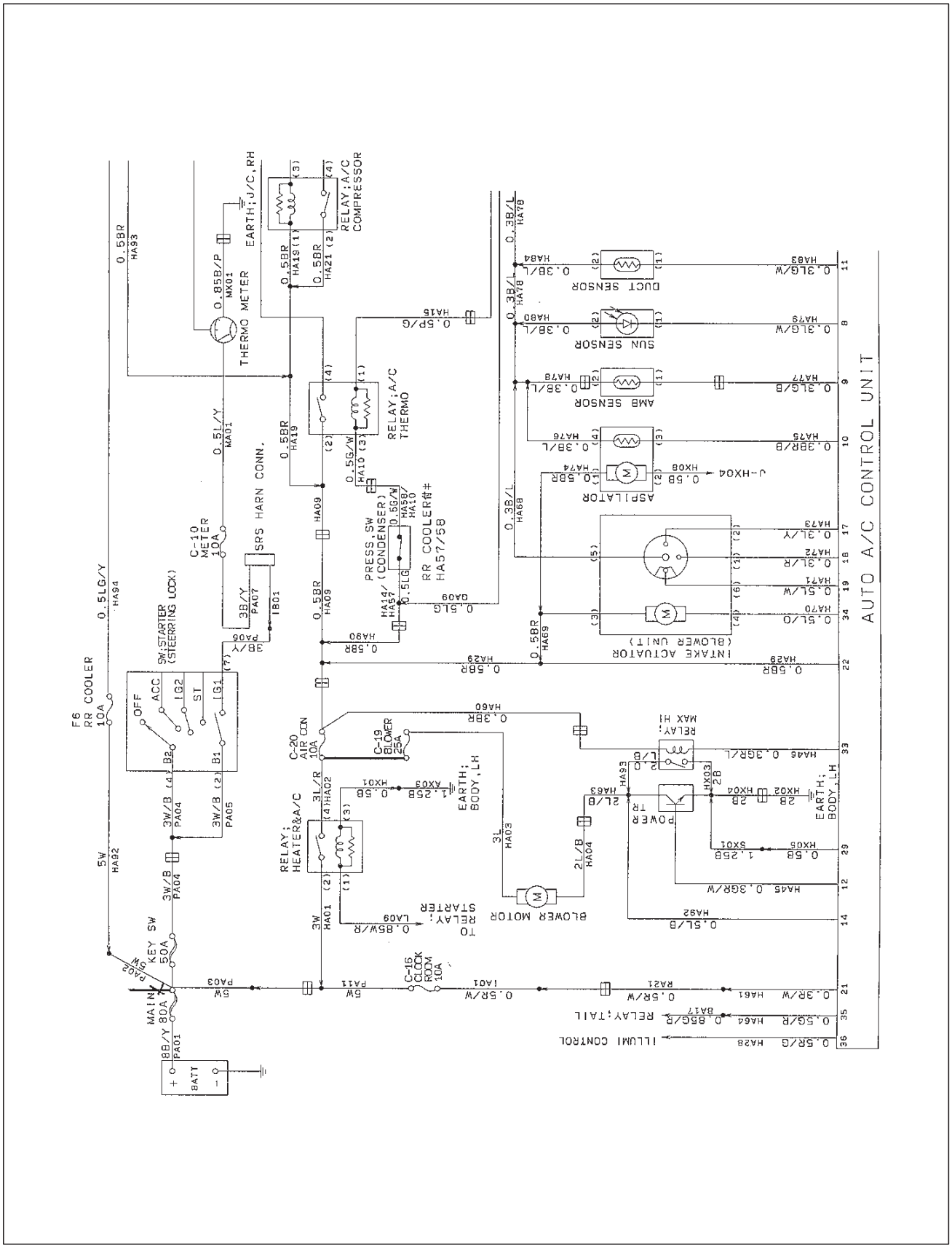

Downloaded from www.Manualslib.com manuals search engine

Air Conditioning (Auto)–2

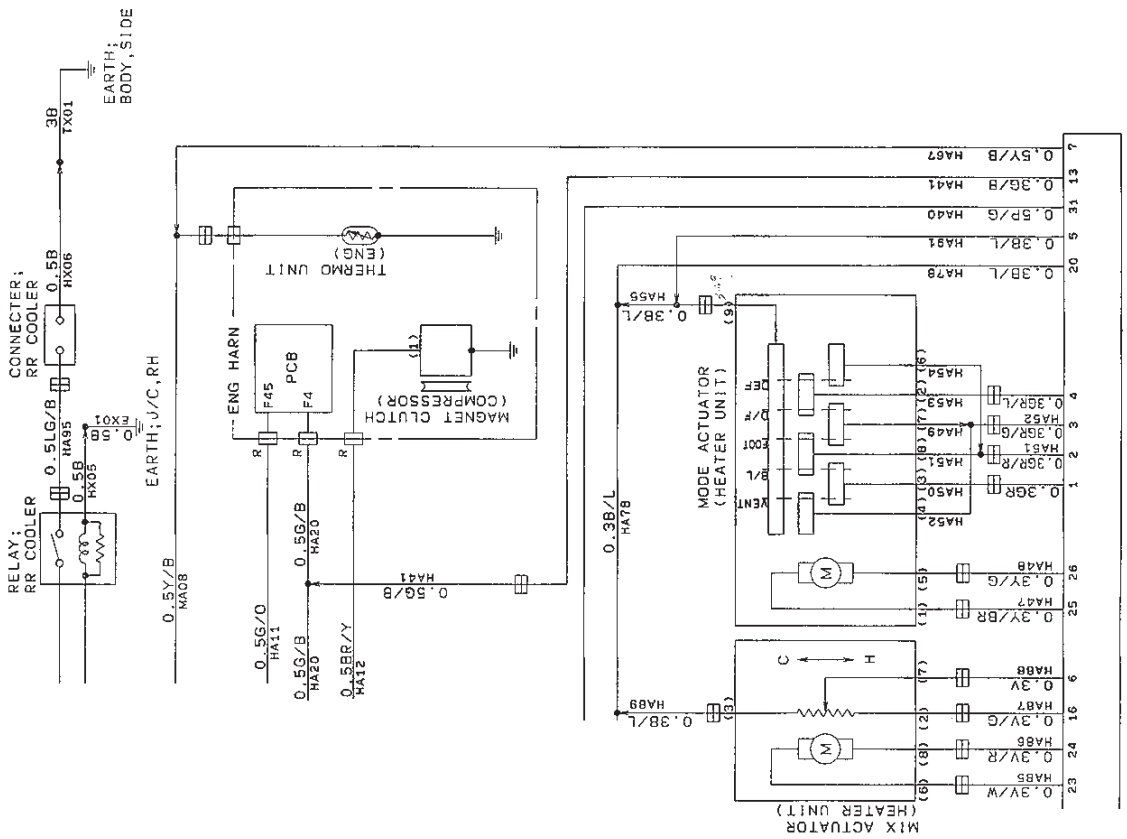

Downloaded from www.Manualslib.com manuals search engine

Sun Roof

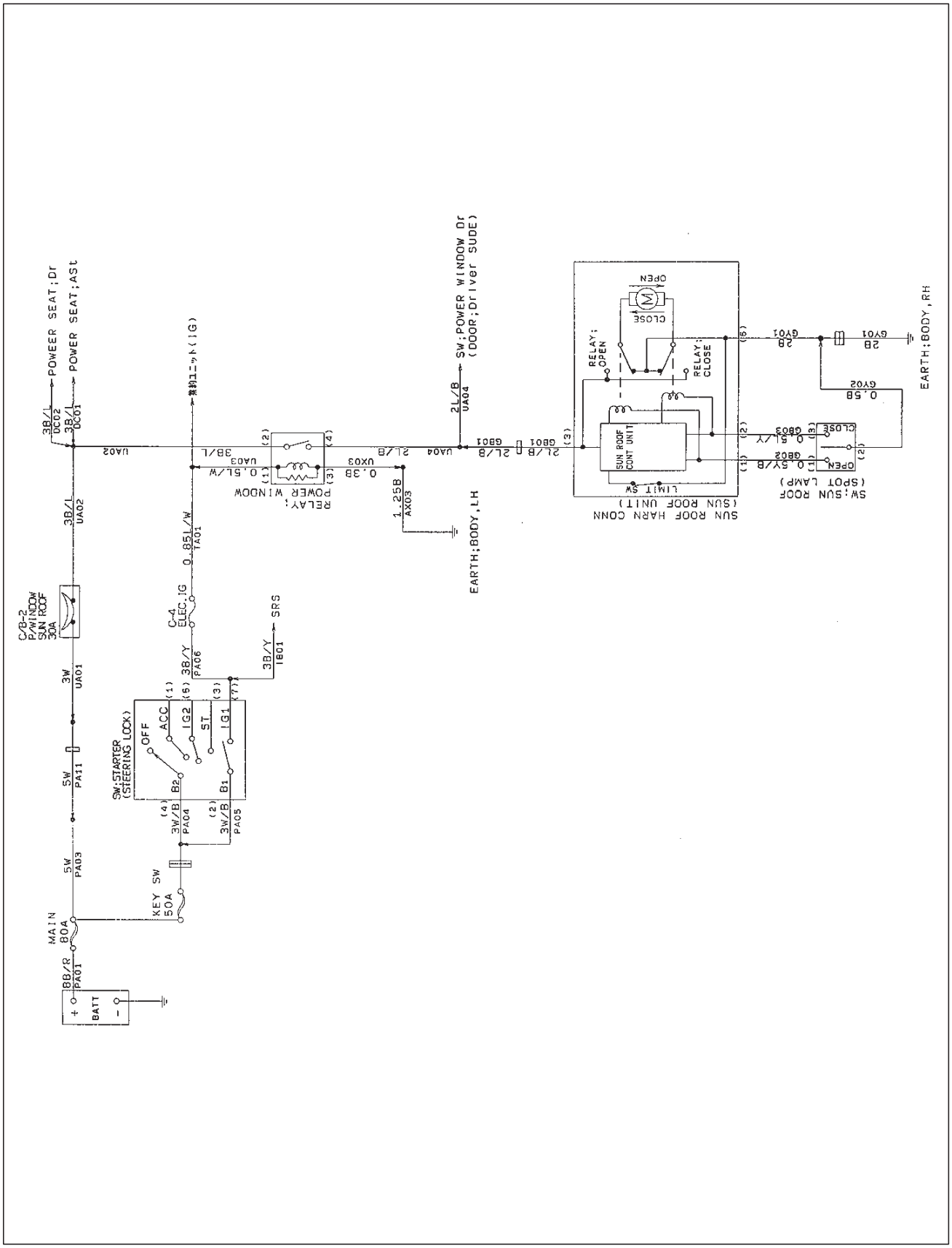

Downloaded from www.Manualslib.com manuals search engine

Seat Heater

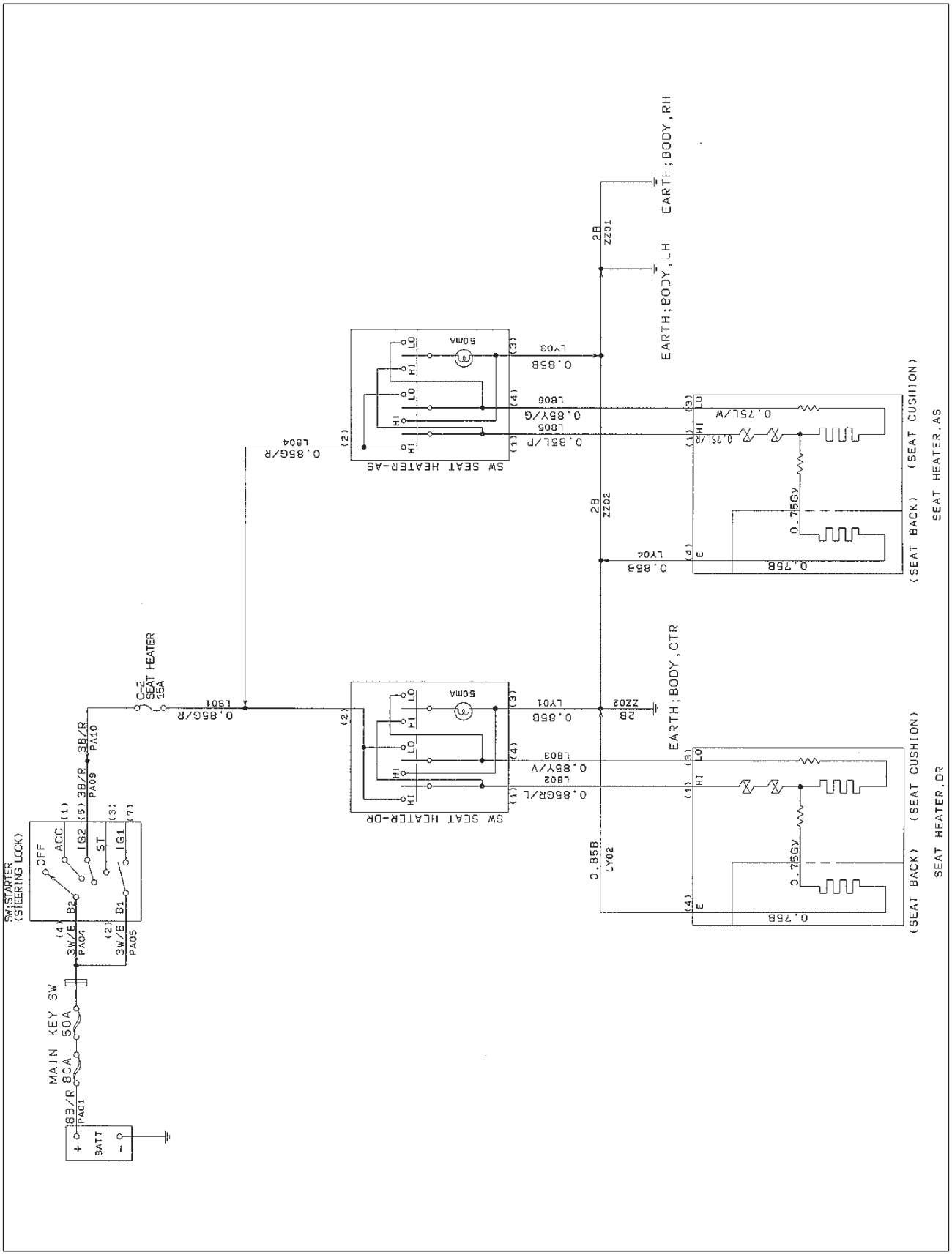

Downloaded from www.Manualslib.com manuals search engine

SRS–Air Bag

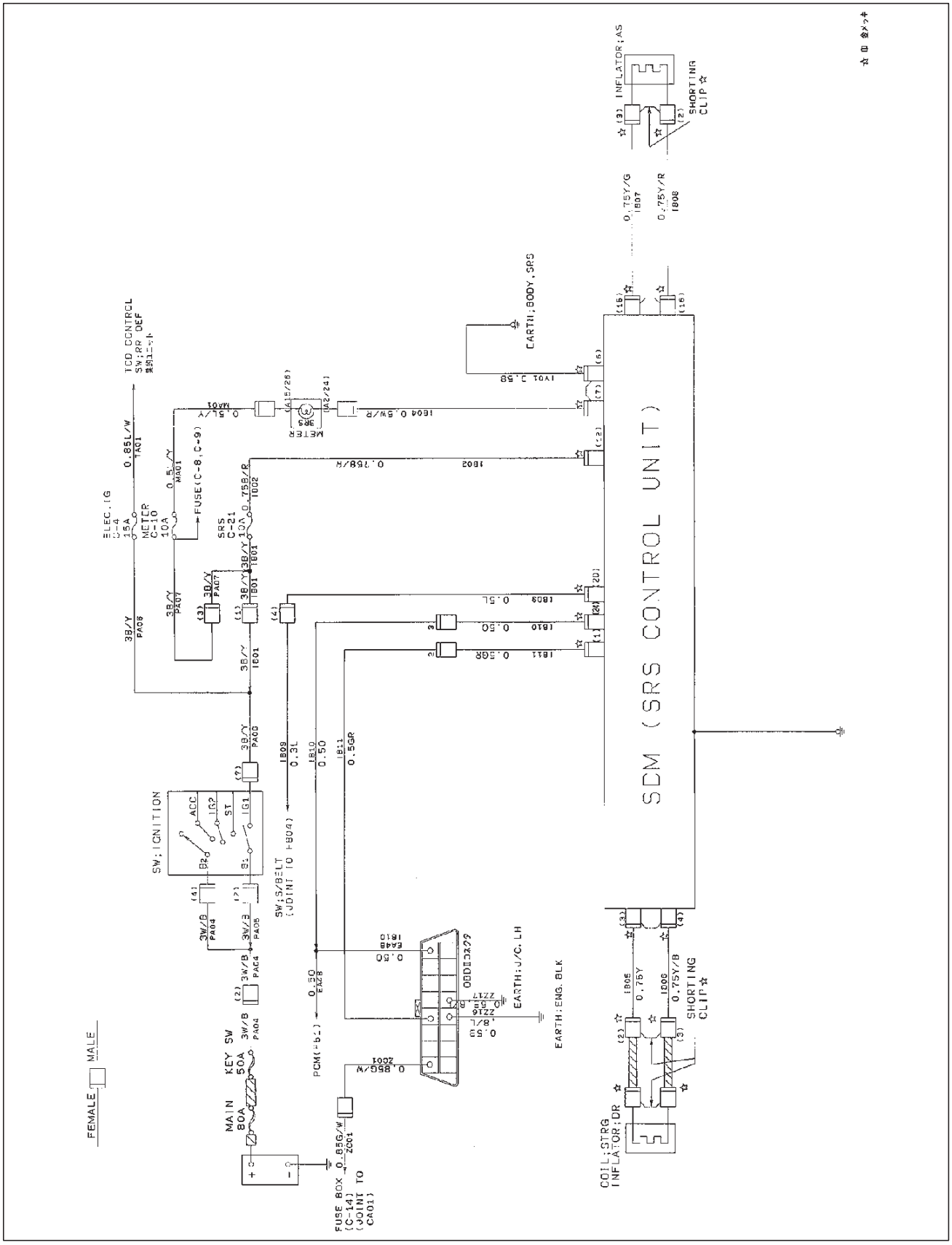

Downloaded from www.Manualslib.com manuals search engine

Shift on the Fly

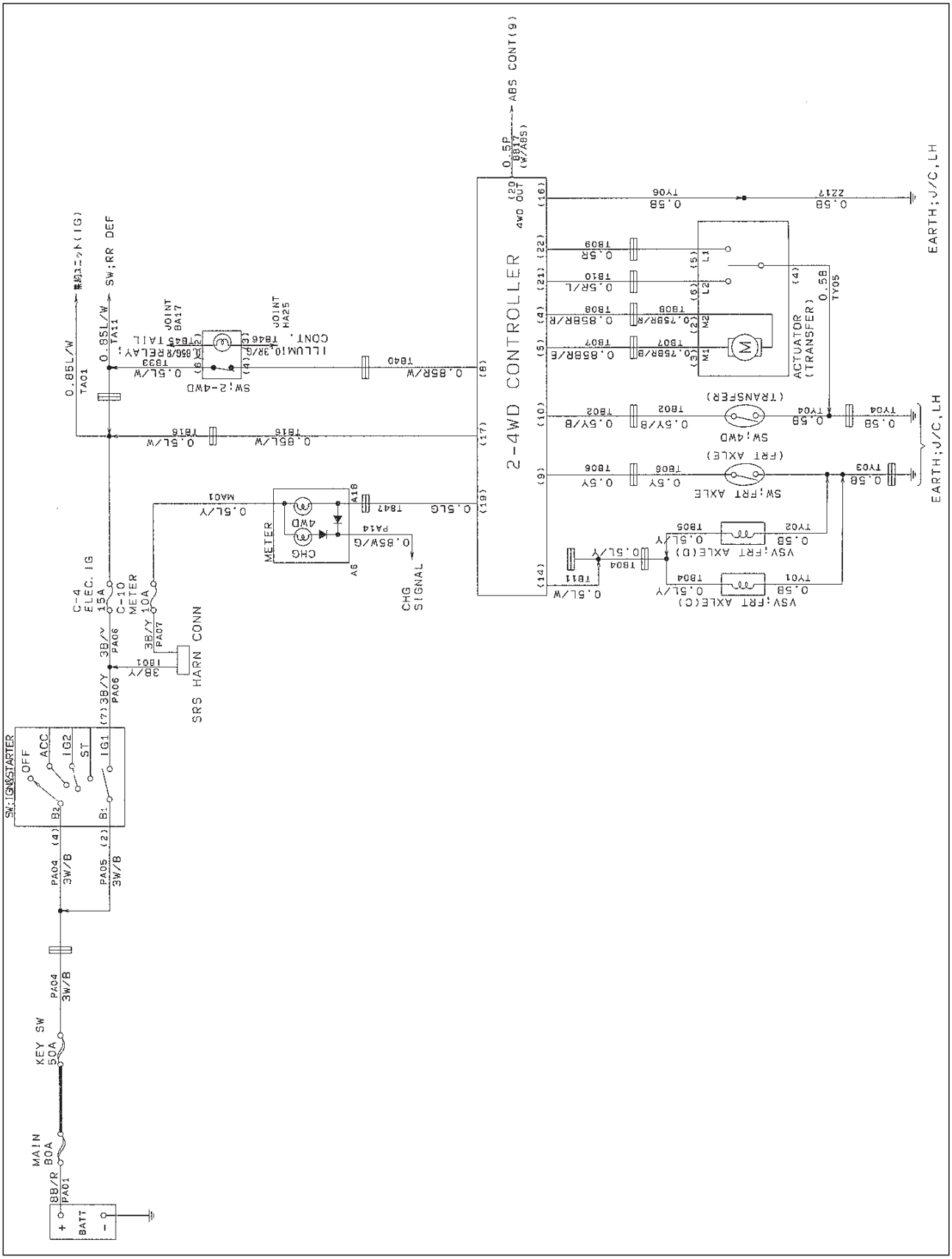

Downloaded from www.Manualslib.com manuals search engine

Torque on Demand (T,O,D)

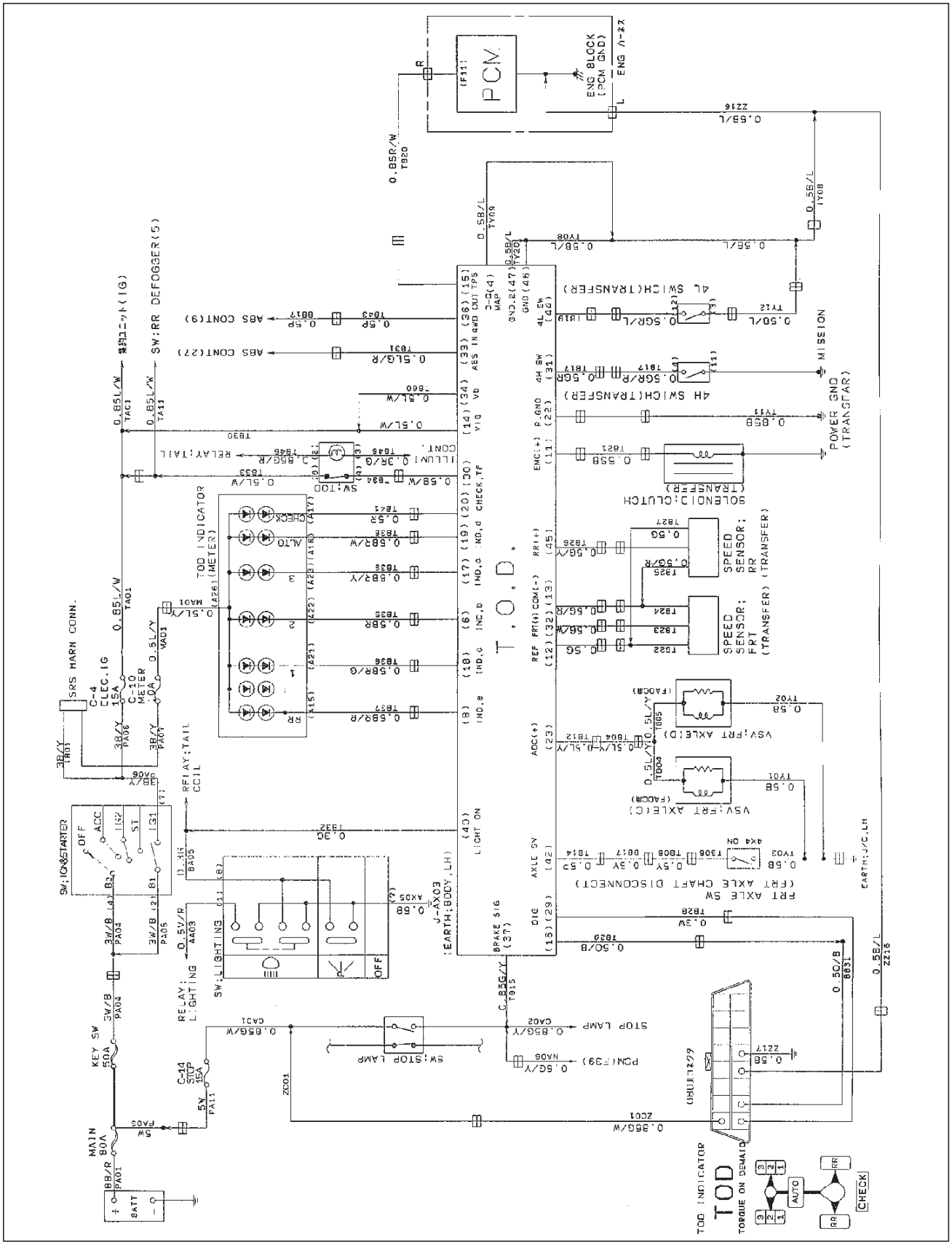

Downloaded from www.Manualslib.com manuals search engine

Alarm and Relay Control Unit

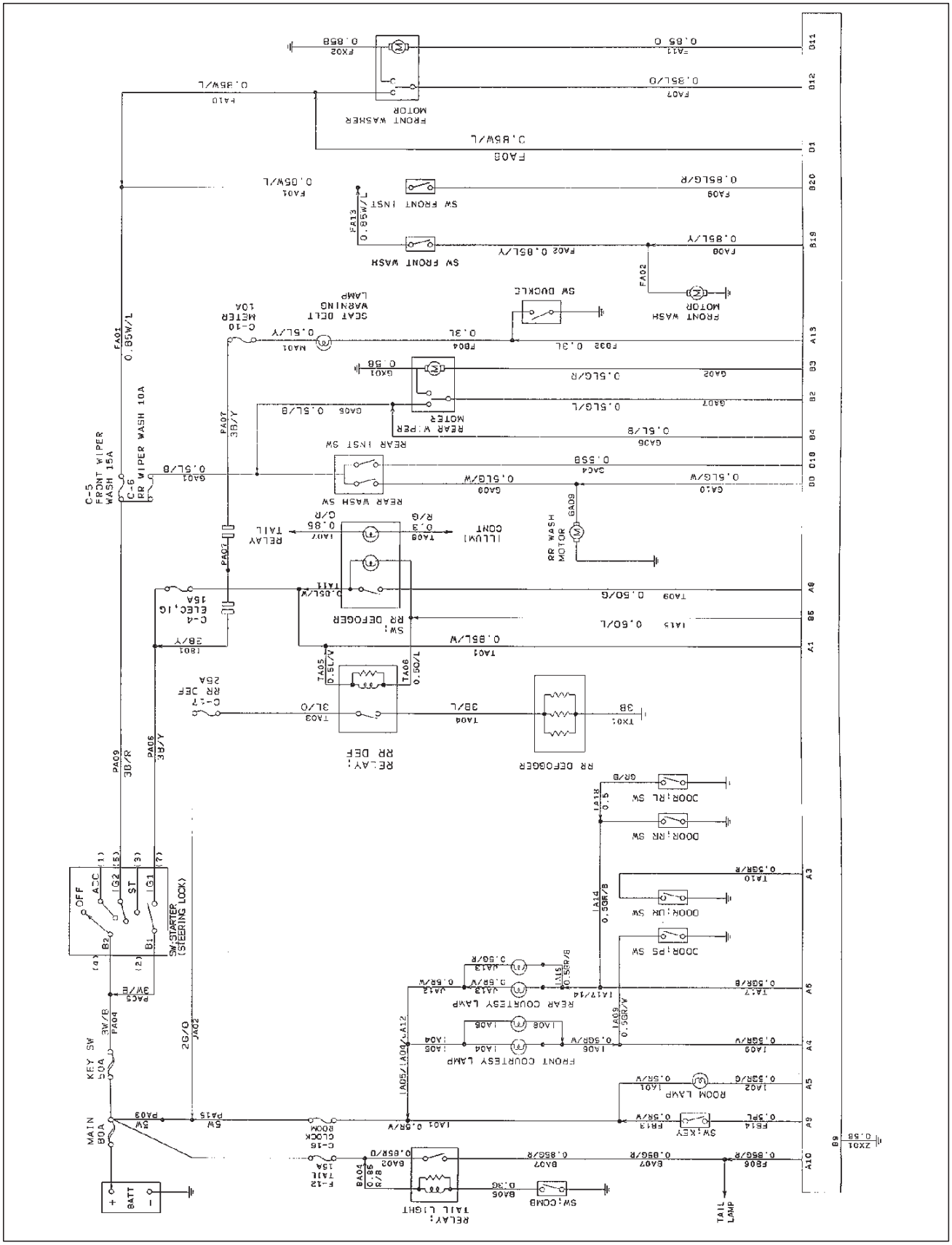

Downloaded from www.Manualslib.com manuals search engine

TROOPER

BODY AND ACCESSORIES

METER AND GAUGE

CONTENTS

Service Precaution 8E–1
General Description 8E–1
Meter Assembly 8E–2
General Description 8E–2
Layout for Meters/Gauges, Warning Lights, Indicator Lights and Illumination Lights . . . 8E–2
Table for Meter/Gauge Connector Terminal Connections 8E–6
Removal 8E–10
Installation 8E–10
Warning Light Bulb, Indicator Light Bulb, Illumination Light Bulb, A/T Indicator Light Bulb 8E–10
Removal 8E–10
Installation 8E–10
Vehicle Speed Sensor 8E–11
Removal 8E–11
Installation 8E–11
Fuel Tank Unit 8E–11
Removal 8E–11
Installation 8E–11
Multi Meter 8E–12
Removal 8E–12
Installation 8E–12
Ambient Sensor 8E–12
Removal 8E–12
Installation 8E–12
Main Data and Specifications 8E–13

Service Precaution

WARNING: THIS VEHICLE HAS A SUPPLEMENTAL RESTRAINT SYSTEM (SRS). REFER TO THE SRS COMPONENT AND WIRING LOCATION VIEW IN ORDER TO DETERMINE WHETHER YOU ARE PERFORMING SERVICE ON OR NEAR THE SRS COMPONENTS OR THE SRS WIRING. WHEN YOU ARE PERFORMING SERVICE ON OR NEAR THE SRS COMPONENTS OR THE SRS WIRING, REFER TO THE SRS SERVICE INFORMATION. FAILURE TO FOLLOW WARNINGS COULD RESULT IN POSSIBLE AIR BAG DEPLOYMENT, PERSONAL INJURY, OR OTHERWISE UNNEEDED SRS SYSTEM REPAIRS.

CAUTION: Always use the correct fastener in the proper location. When you replace a fastener, use ONLY the exact part number for that application. ISUZU will call out those fasteners that require a replacement after removal. ISUZU will also call out the fasteners that require thread lockers or thread sealant. UNLESS OTHERWISE SPECIFIED, do not use supplemental coatings (Paints, greases, or other corrosion inhibitors) on threaded fasteners or fastener joint interfaces. Generally, such coatings adversely affect the fastener torque and the joint clamping force, and may damage the fastener. When you install fasteners, use the correct tightening sequence and specifications. Following these instructions can help you avoid damage to parts and systems.

General Description

The circuit consists of the starter switch, meter assembly, vehicle speed sensor, transmission switch, lighting switch, turn signal switch, thermo unit, oil pressure unit, Powertrain Control Module (PCM), fuel tank unit, 4WD switch, oil pressure switch, parking brake switch, brake fluid switch, seat belt switch, illumination controller, multi meter and ambient sensor.

Downloaded from www.Manualslib.com manuals search engine

Meter Assembly

General Description

The meter assembly has the speedometer, tachometer, engine coolant temperature gauge, fuel gauge and warning/indicator lights.In addition, the meter assembly containing TOD (Torque on Demand) has the TOD indicator light, or the meter assembly not containing TOD has the voltmeter and oil pressure gauge instead of the TOD indicator.

Layout for Meters/Gauges, Warning Lights, Indicator Lights and Illumination Lights

Meter Assembly W/O TOD (Front View)

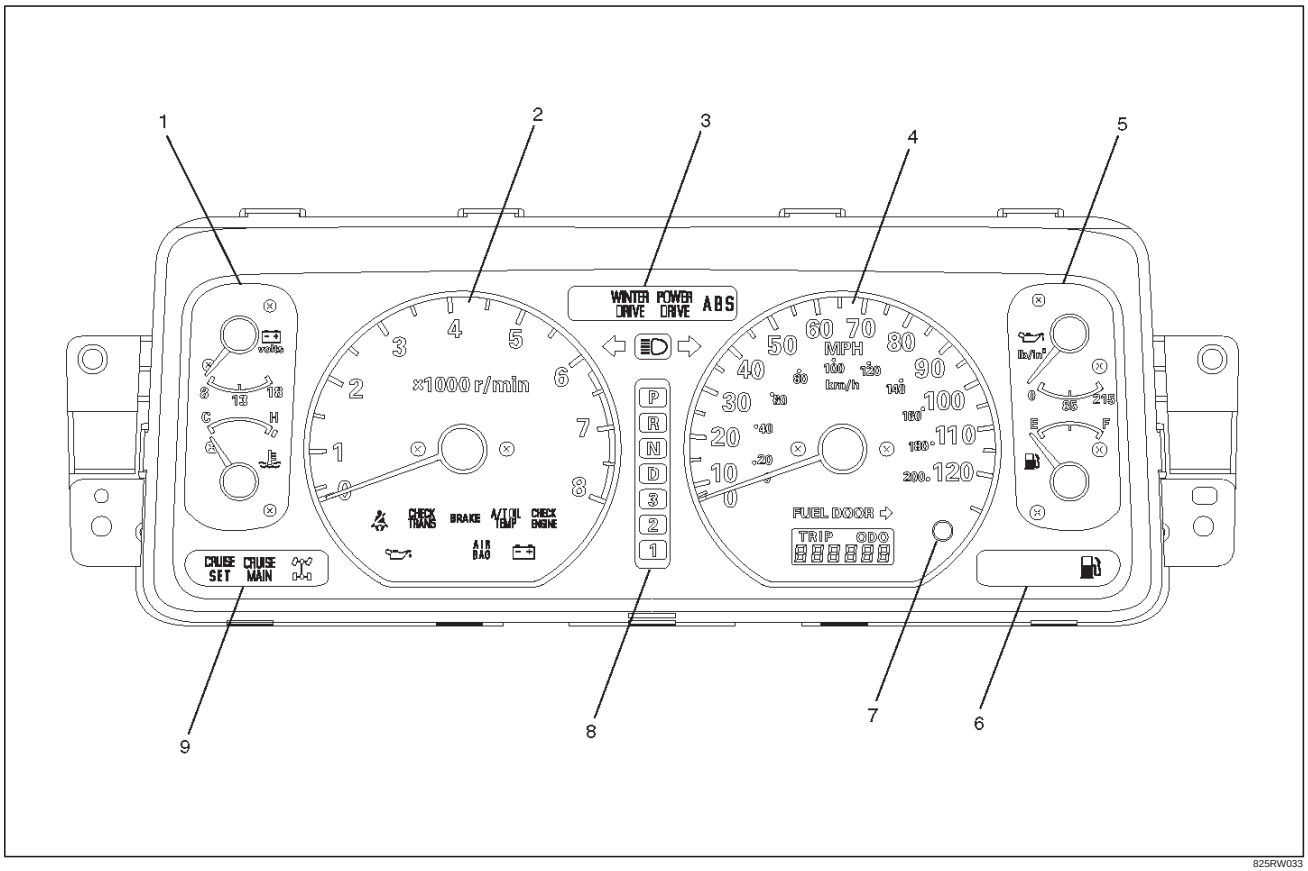

825RW033

Legend

(1) Voltmeter & Engine Coolant Temperature Gauge
(2) Tachometer
(3) Warning Light Lens
(4) Speedometer
(5) Oil Pressure Gauge & Fuel Gauge
(6) Warning Light Lens
(7) Reset Knob
(8) A/T Shift Indicator
(9) Warning Light Lens

Downloaded from www.Manualslib.com manuals search engine

Meter Assembly W/O TOD (Rear View)

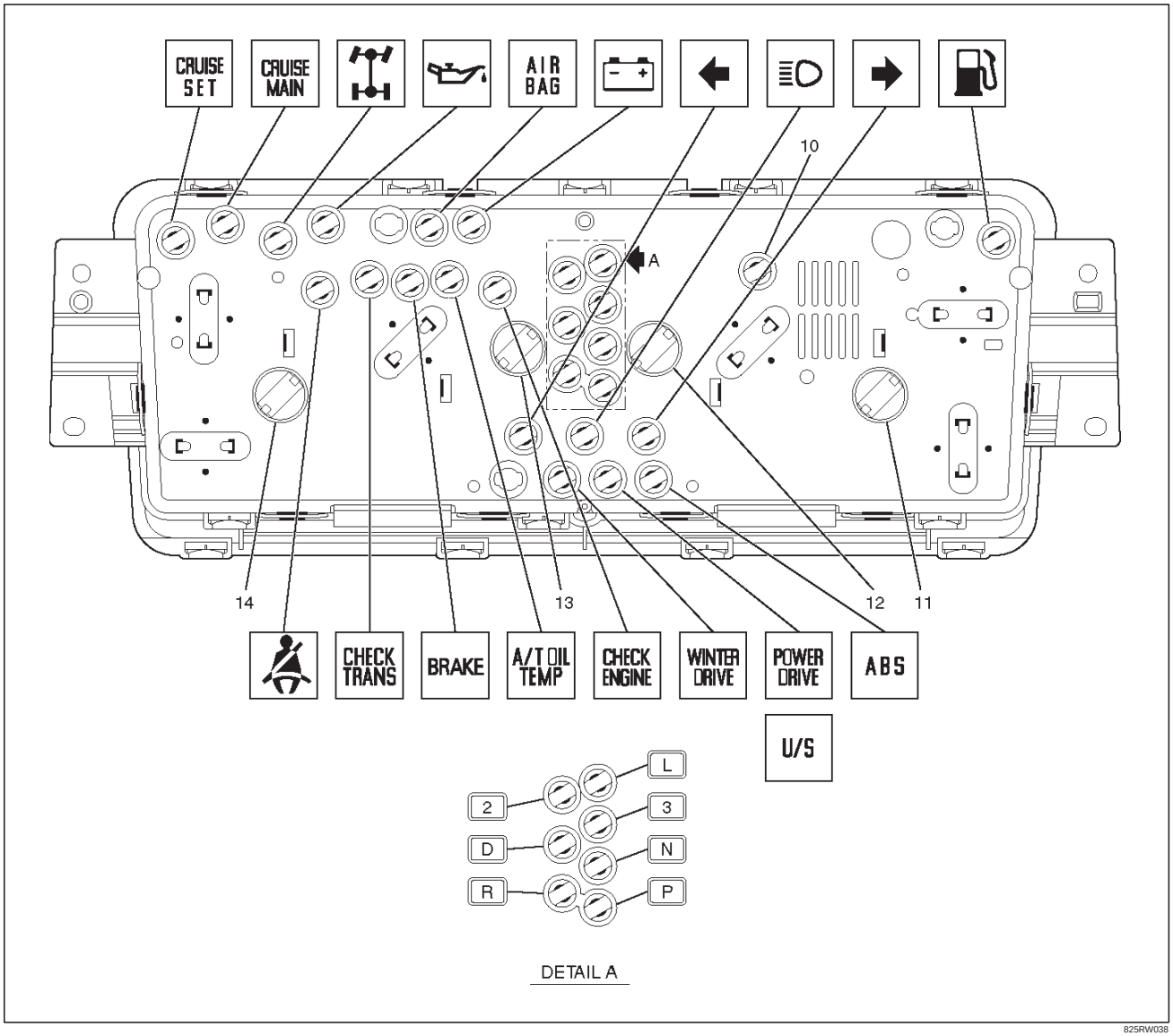

825RW038

Legend

(10) LCD Light
(11) Illumination Light
(12) Illumination Light
(13) Illumination Light
(14) Illumination Light

Downloaded from www.Manualslib.com manuals search engine

Meter Assembly W/TOD (Front View)

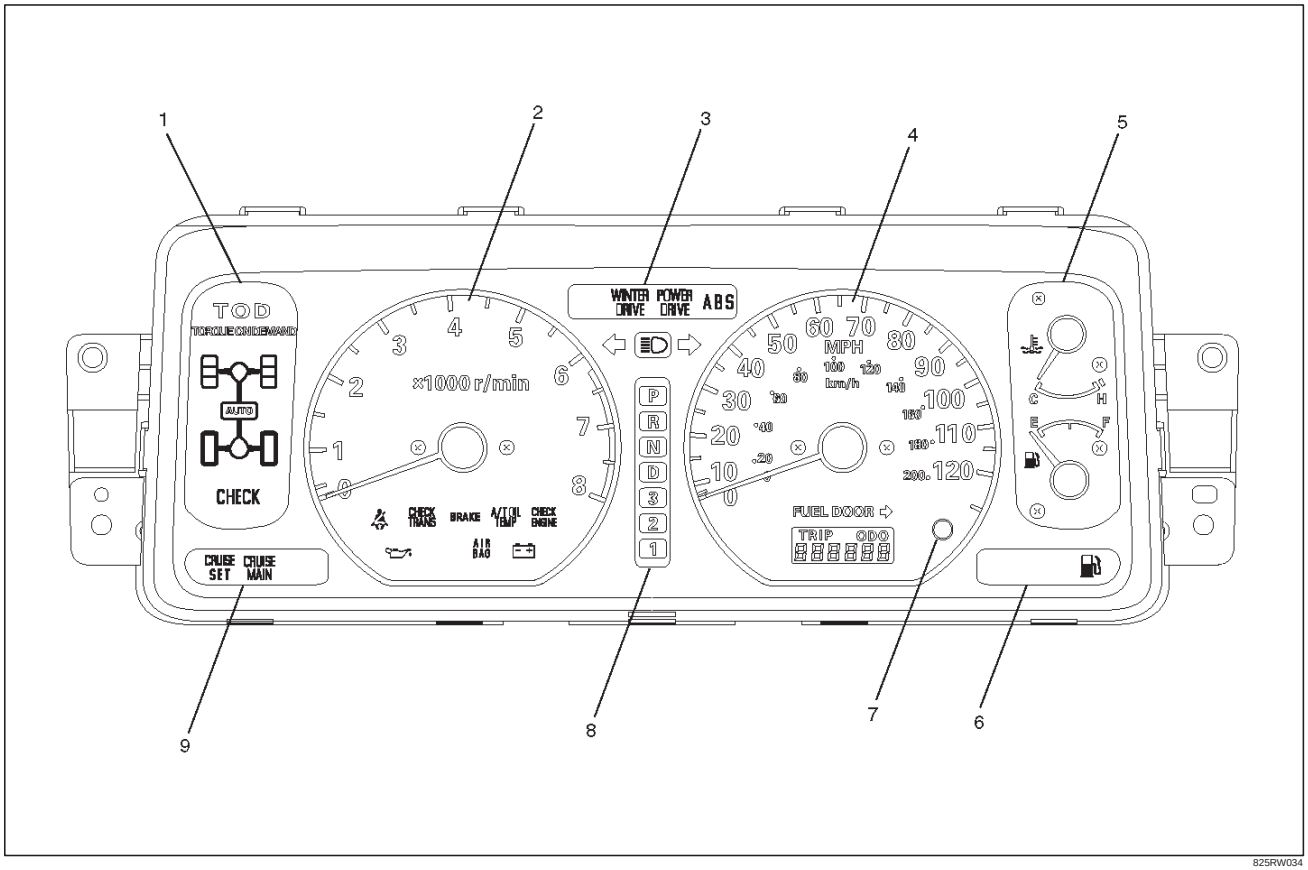

825RW034

Legend

(1) TOD Indicator
(2) Tachometer
(3) Warning Light Lens
(4) Speedometer
(5) Coolant Temperature Gauge & Fuel Gauge
(6) Warning Light Lens
(7) Reset Knob
(8) A/T Shift Indicator
(9) Warning Light Lens

Downloaded from www.Manualslib.com manuals search engine

Meter Assembly W/TOD (Rear View)

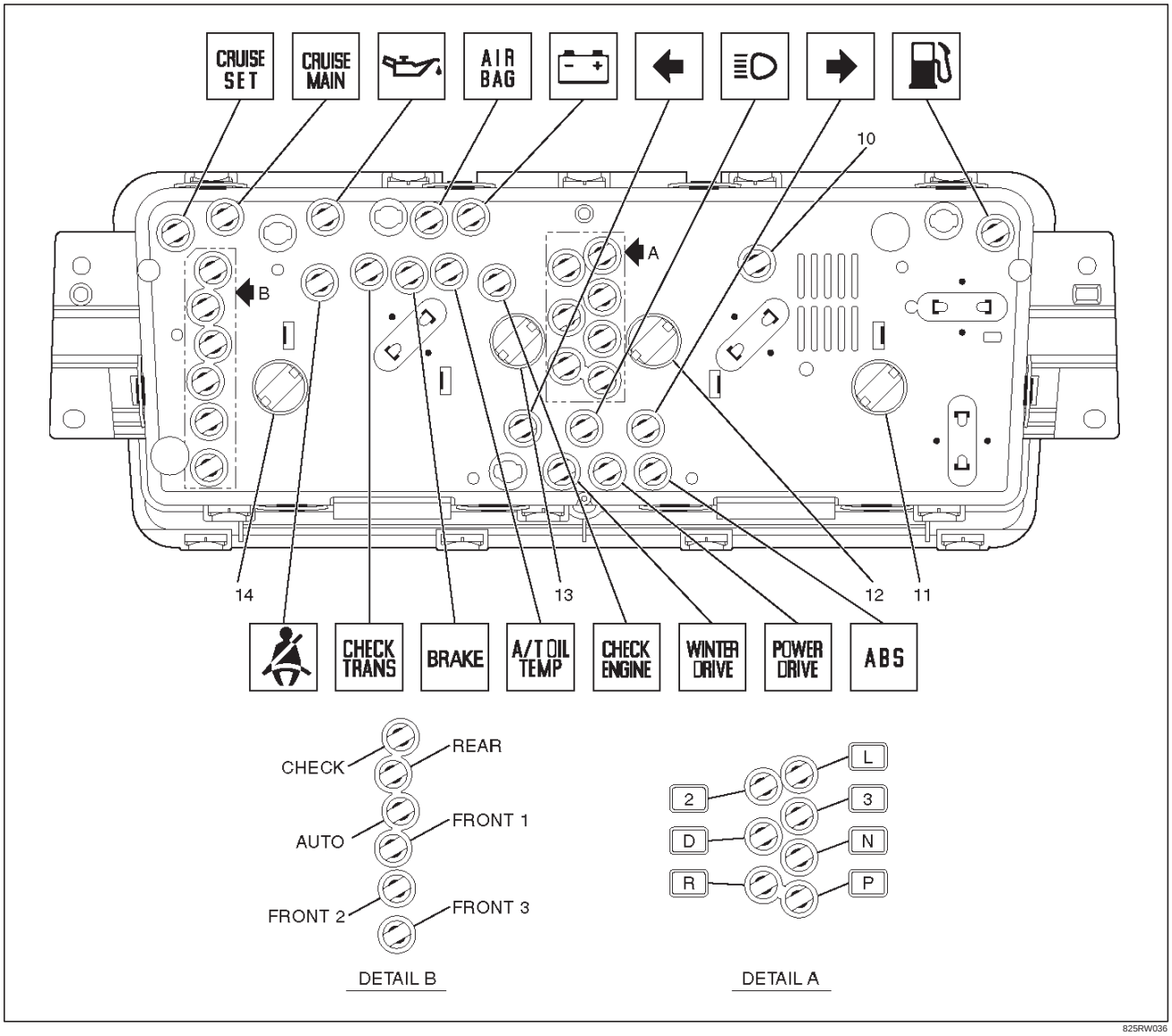

Legend

(10) LCD Light
(11) Illumination Light
(12) Illumination Light
(13) Illumination Light
(14) Illumination Light

Downloaded from www.Manualslib.com manuals search engine

Table for Meter/Gauge Connector Terminal Connections

Meter Assembly W/O TOD–1

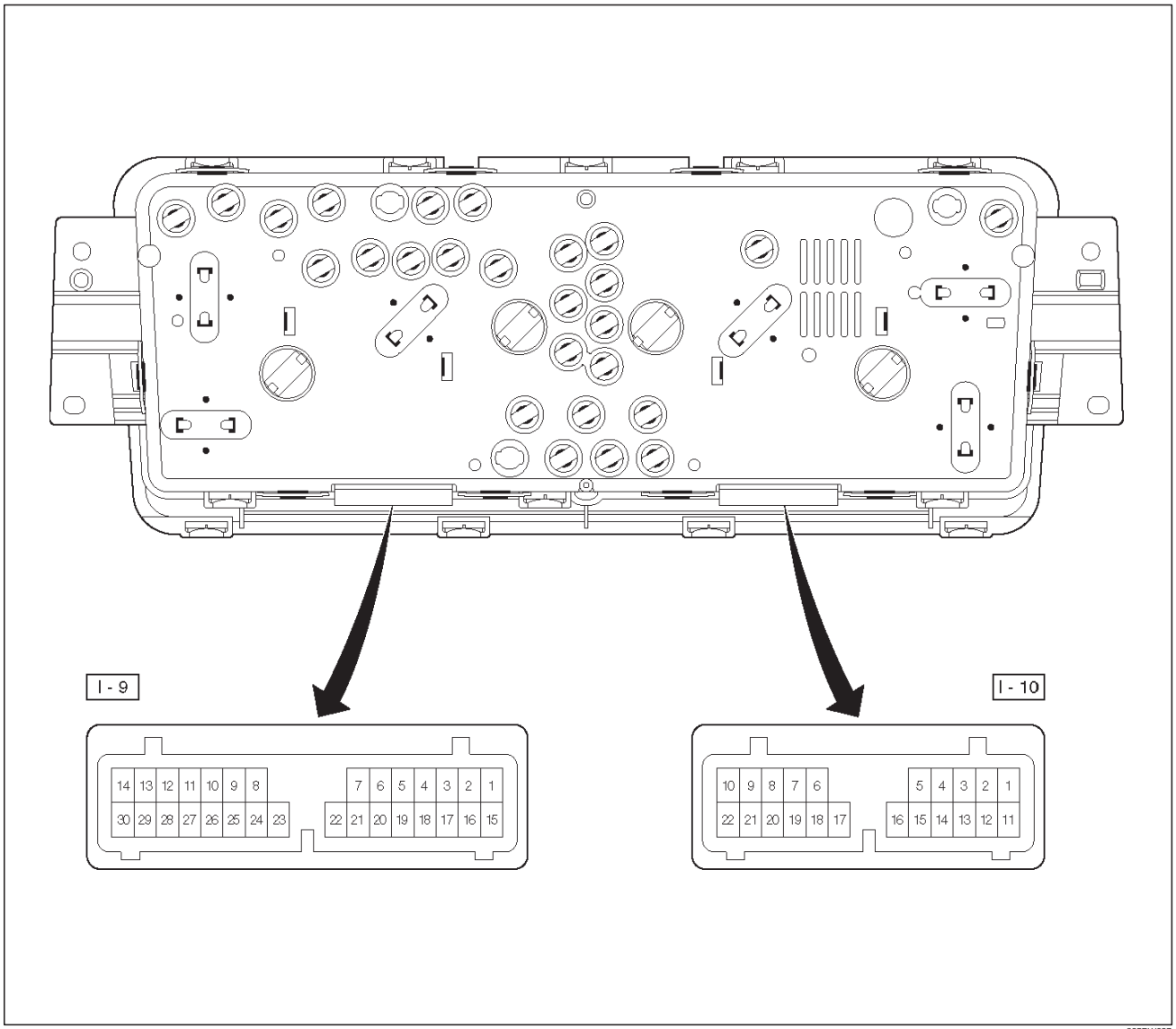

825RW037

Downloaded from www.Manualslib.com manuals search engine

Meter Assembly W/O TOD–2

Connector No. I–9	
Terminal	**Function**
1	A/T oil temp warning light
2	Seat belt warning light
3	Check trans warning light
4	Brake warning light
5	Check engine warning light
6	Charge warning light
7	Lighting switch
8	Illumination controller
9	Tachometer
10	D position (A/T)
11	—
12	A/T shift indicator control unit
13	—
14	2 position (A/T)
15	Starter switch
16	Cruise set indicator light
17	Cruise main indicator light
18	4WD indicator light
19	Ground (Gauge)
20	—
21	Winter drive indicator light
22	Oil pressure warning light
23	—
24	Air bag warning light
25	Power drive indicator light
26	—
27	Up shift indicator light (–)
28	Turn signal indicator light (Left)
29	Up shift indicator light (+)
30	Ground (Warning)

Connector No. I–10	
Terminal	**Function**
1	Turn signal indicator light (Right)
2	L position (A/T)
3	R position (A/T)
4	Engine coolant temperature gauge
5	Speedometer
6	—
7	—
8	Battery (+)
9	—
10	—
11	P position (A/T)
12	N position (A/T)
13	3 position (A/T)
14	High-beam indicator light (–)
15	High-beam indicator light (+)
16	ABS indicator light
17	—
18	Fuel warning light
19	Oil pressure gauge
20	Fuel gauge
21	—
22	—

Downloaded from www.Manualslib.com manuals search engine

Meter Assembly W/TOD–1

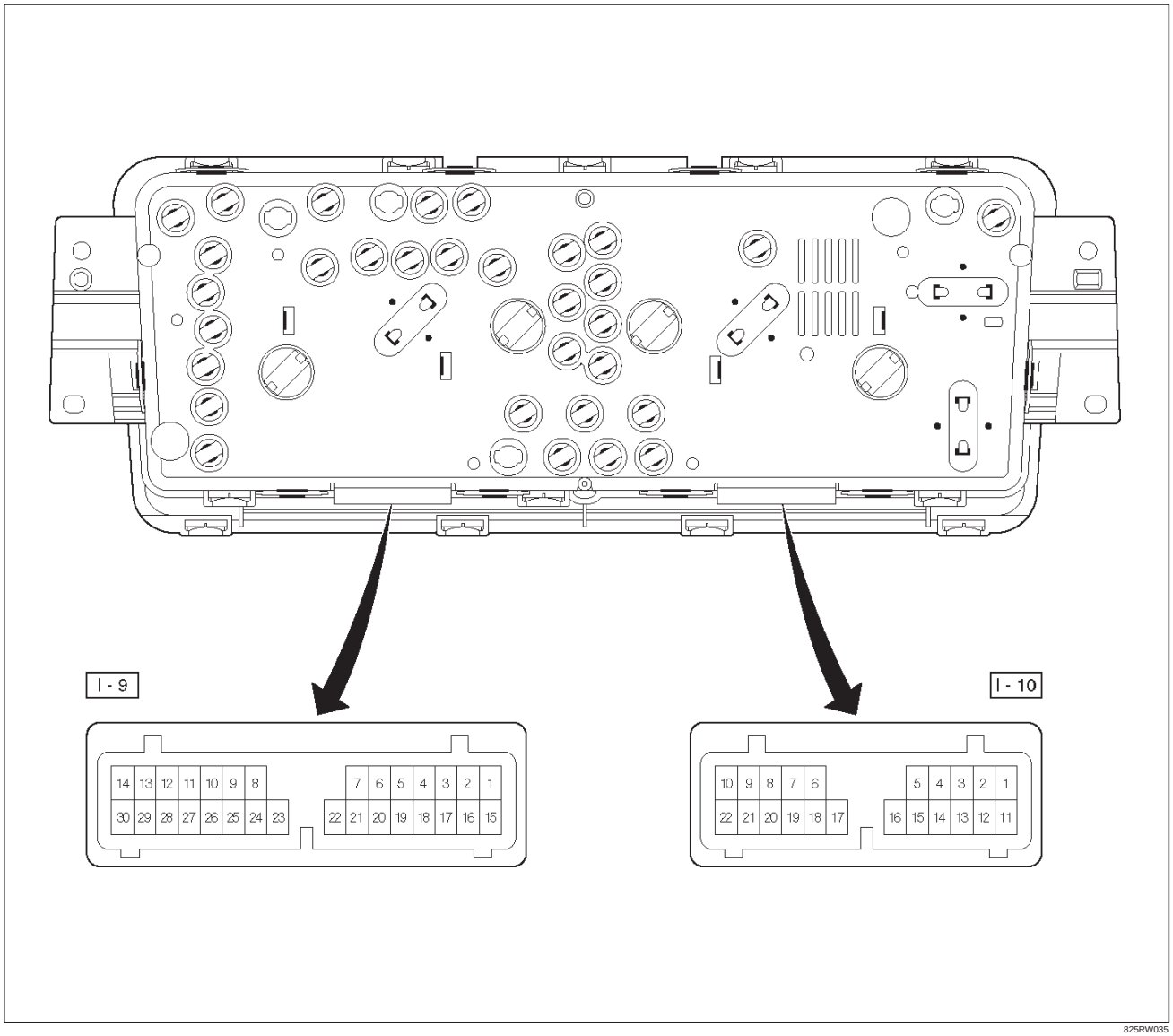

825RW035

Downloaded from www.Manualslib.com manuals search engine

Meter Assembly W/TOD–2

Connector No. I–9	
Terminal	**Function**
1	—
2	Air bag warning light
3	A/T oil temp warning light
4	Charge warning light
5	Seat belt warning switch
6	Check trans warning light
7	Brake warning light
8	—
9	Tachometer
10	—
11	Turn signal indicator light (Left)
12	A/T shift indicator control unit
13	2 position (A/T)
14	D position (A/T)
15	Rear (TOD)
16	Auto (TOD)
17	Check (TOD)
18	Cruise set indicator light
19	Cruise main indicator light
20	Oil pressure warning light
21	Front “1” (TOD)
22	Front “2” (TOD)
23	Front “3” (TOD)
24	Lighting switch
25	Illumination controller
26	Starter switch
27	—
28	Winter drive indicator light
29	Power drive indicator light
30	—

Connector No. I–10	
Terminal	**Function**
1	Turn signal indicator light (Right)
2	L position (A/T)
3	R position (A/T)
4	Check engine warning light
5	Speedometer
6	—
7	—
8	Battery (+)
9	Engine coolant temperature gauge
10	Ground (Warning)
11	P position (A/T)
12	N position (A/T)
13	3 position (A/T)
14	High beam indicator light (–)
15	High beam indicator light (+)
16	ABS indicator light
17	—
18	Fuel warning light
19	—
20	Fuel gauge
21	Ground (Gauge)
22	—

Downloaded from www.Manualslib.com manuals search engine

Removal

1. Disconnect the battery ground cable.
2. Remove the front console assembly(1).
   Refer to the Instrument Panel Assembly in Body Structure section.
3. Remove the lower cluster assembly(2).
   Refer to the Instrument Panel Assembly in Body Structure section.
4. Remove the instrument panel driver lower cover(3).
   Refer to the Instrument Panel Assembly in Body Structure section.

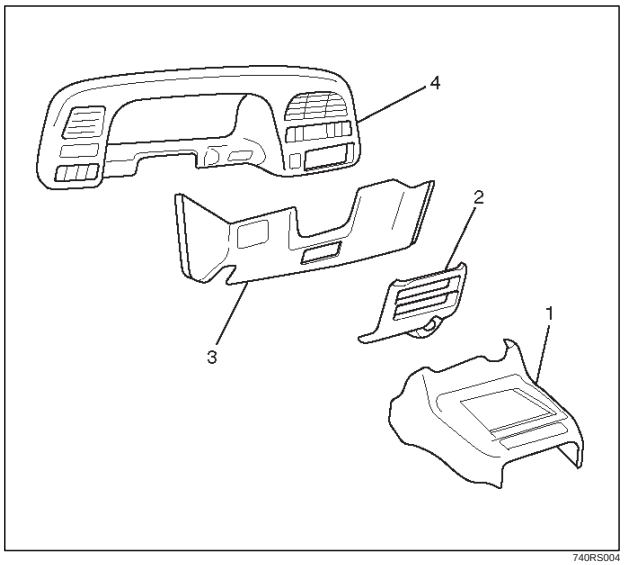

740RS004

5. Remove four fixing screws and disconnect the meter connectors to remove the meter assembly(5).

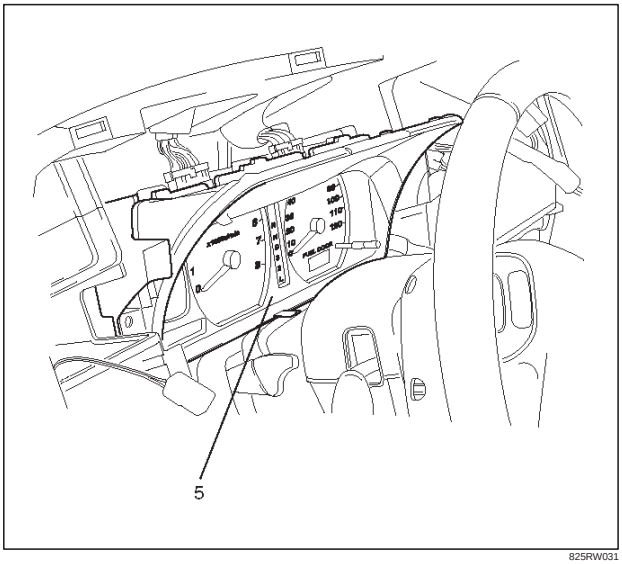

825RW031

CAUTION: The removed meter assembly should be placed upright or with its face side up.

Installation

To install, follow the removal steps in the reverse order.

Warning Light Bulb, Indicator Light Bulb, Illumination Light Bulb, A/T Indicator Light Bulb

Removal

1. Disconnect the battery ground cable.
2. Remove the meter assembly(1).
   Refer to the Meter Assembly removal steps in this section.
3. Hold the bulb socket by hand and rotate it counterclockwise to remove the socket & bulb(2) from the meter body.

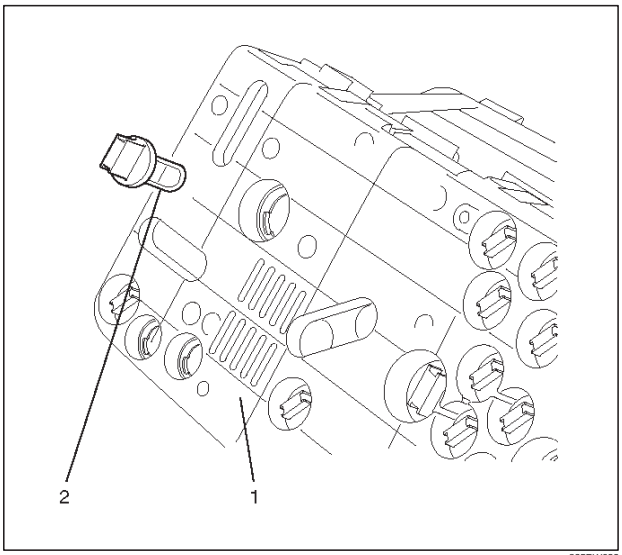

825RW032

Installation

To install, follow the removal steps in the reverse order.

Downloaded from www.Manualslib.com manuals search engine

Vehicle Speed Sensor

Removal

1. Disconnect the battery ground cable.
2. Disconnect the connector, remove the vehicle speed sensor body by rotating it and then remove the vehicle speed sensor(1).

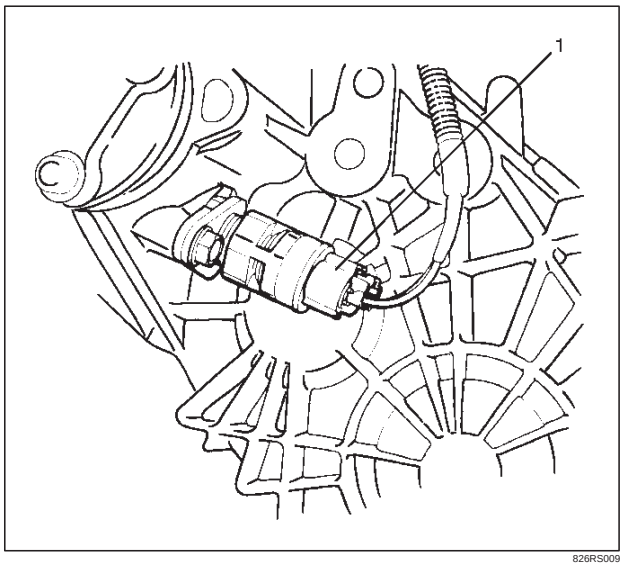

826RS009

Installation

To install, follow the removal steps in the reverse order, noting the following point.

1. Tighten the vehicle speed sensor to the specified torque.

   Torque: 27 N·m (20 lb ft)

Fuel Tank Unit

Removal

1. Disconnect the battery ground cable.
2. Remove the fuel tank(1).
   Refer to the Fuel Tank removal steps in Engine section
3. Disconnect the connectors, remove five screws and then remove the fuel tank unit(2).

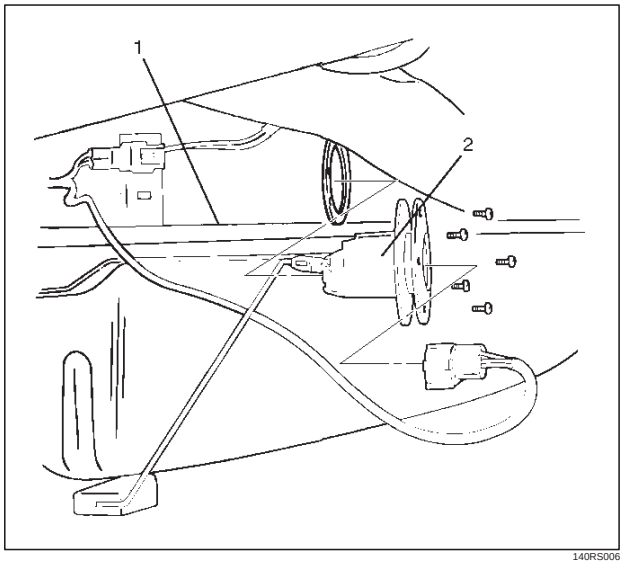

140RS006

Installation

To install, follow the removal steps in the reverse order.

Downloaded from www.Manualslib.com manuals search engine

Multi Meter

Removal

1. Disconnect the battery ground cable.
2. Remove two caps, two screws and disconnect the connector to remove the multi meter(1).

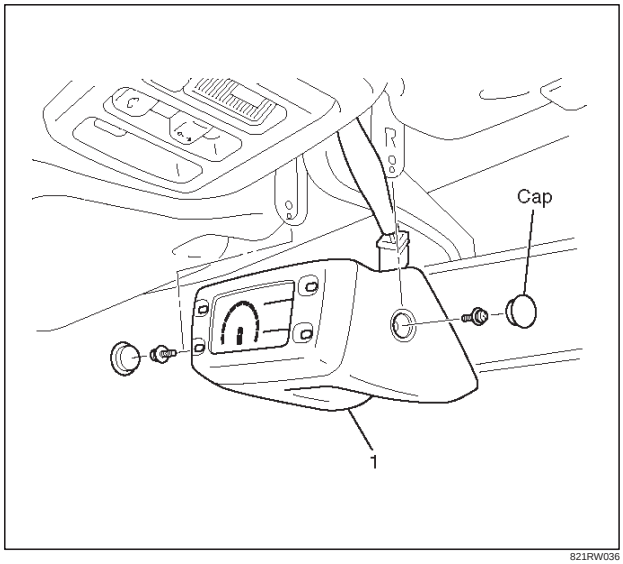

821RW036

Installation

To install, follow the removal steps in the revers order.

Ambient Sensor

Removal

1. Disconnect the battery ground cable.
2. Disconnect the connector and remove the nut to remove the ambient sensor(1).

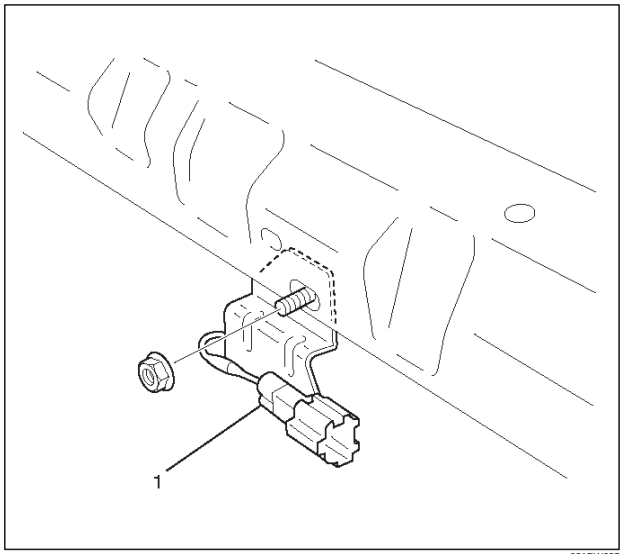

821RW035

Installation

To install, follow the removal steps in the reverse order.

Downloaded from www.Manualslib.com manuals search engine

Main Data and Specifications

Torque Specifications

Application	N·m	Lb Ft	Lb In
Vehicle Speed Sensor Fixing	27	20	—

Downloaded from www.Manualslib.com manuals search engine

TROOPER

BODY AND ACCESSORIES

BODY STRUCTURE

CONTENTS

Service Precaution 8F–3
Frame 8F–3
General Description 8F–3
Frame Dimensions 8F–4
General Description 8F–5
Front Bumper 8F–5
Parts Location 8F–5
Removal 8F–6
Installation 8F–6
Front Bumper Slider Bracket 8F–6
Removal 8F–6
Installation 8F–6
Rear Bumper 8F–7
Parts Location 8F–7
Removal 8F–7
Installation 8F–8
Rear Bumper Slider 8F–9
Removal 8F–9
Installation 8F–9
General Description 8F–10
Cowl Cover 8F–10
Parts Location 8F–10
Removal 8F–10
Installation 8F–11
Engine Hood 8F–11
Removal 8F–11
Installation 8F–11
Engine Hood Hinge 8F–12
Parts Location 8F–12
Removal 8F–12
Installation 8F–12
Engine Hood Lock 8F–13
Parts Location 8F–13
Removal 8F–13
Installation 8F–14
Radiator Grille And Front End Lower Panel . 8F–14
Parts Location 8F–14
Removal 8F–14
Installation 8F–15
Front Fender Panel 8F–16
Parts Location 8F–16
Removal 8F–16
Installation 8F–17
Body Mounting 8F–18
Parts Location 8F–18
Removal (No.1 – No. 2) 8F–18
Removal (No. 3 — No. 6) 8F–19
Installation 8F–20
General Description 8F–21
Body Dimension 8F–22
Instrument Panel Assembly 8F–40
Parts Location 8F–40
Removal 8F–40
Installation 8F–45
Cross Beam Assembly 8F–46
Parts Location 8F–46
Removal 8F–46
Installation 8F–47
Front Door Assembly 8F–48
Parts Location 8F–48
Removal 8F–48
Installation 8F–48
Rear Door Assembly 8F–49
Parts Location 8F–49
Removal 8F–49
Installation 8F–50
Door Strikers 8F–50
Adjustment 8F–50
Door Check Arm Assembly (Front & Rear) . . 8F–51
Parts Location 8F–51
Removal 8F–51
Installation 8F–52
Front Window Regulator, Glass And Glass Run 8F–52
Parts Location 8F–52
Removal 8F–52
Installation 8F–54
Rear Window Regulator And Glass 8F–55
Parts Location 8F–55
Removal 8F–55
Installation 8F–56
Rear Door Fixed Glass And Glass Run 8F–57
Parts Location 8F–57
Removal 8F–57
Installation 8F–58
Front Door Sash Moulding 8F–59
Parts Location 8F–59
Removal 8F–59

Downloaded from www.Manualslib.com manuals search engine

Installation 8F–59
Rear Door Moulding 8F–60
Parts Location 8F–60
Removal 8F–60
Installation 8F–60
Front Door Waist Seal 8F–61
Parts Location 8F–61
Removal 8F–61
Installation 8F–61
Rear Door Waist Seal 8F–62
Parts Location 8F–62
Removal and Installation 8F–62
Front Door Weatherstrip 8F–63
Parts Location 8F–63
Removal 8F–63
Installation 8F–64
Rear Door Weatherstrip 8F–65
Parts Location 8F–65
Removal and Installation 8F–65
Front Door Seal Finisher 8F–66
Parts Location 8F–66
Removal 8F–66
Installation 8F–66
Rear Door Seal Finisher 8F–67
Parts Location 8F–67
Removal 8F–67
Installation 8F–67
Tailgate Assembly (LH) 8F–68
Parts Location 8F–68
Removal 8F–68
Installation 8F–69
Tailgate Assembly (RH) 8F–70
Parts Location 8F–70
Removal 8F–70
Installation 8F–71
Tailgate Strikers 8F–72
Adjustment 8F–72
Tailgate Stopper Assembly 8F–72
Parts Location 8F–72
Removal 8F–72
Installation 8F–72
Tailgate Dove-Tail 8F–73
Parts Location 8F–73
Removal 8F–73
Installation 8F–73
Tailgate Dove-Tail Striker 8F–74
Adjustment 8F–74
Tailgate Frame Cover (LH) 8F–75
Parts Location 8F–75
Removal 8F–75
Installation 8F–75
Tailgate Frame Cover (RH) 8F–76
Removal 8F–76
Installation 8F–76
Tailgate Sash Trim Cover 8F–77
Parts Location 8F–77
Removal 8F–77
Installation 8F–77
Tailgate Outer Weatherstrip 8F–78
Parts Location 8F–78
Removal 8F–78
Installation 8F–78
Tailgate Center Weatherstrip 8F–79
Parts Location 8F–79
Removal 8F–79
Installation 8F–79
Tailgate Main Weatherstrip 8F–80
Parts Location 8F–80
Removal 8F–80
Installation 8F–80
Spare Tire Carrier 8F–81
Parts Location 8F–81
Removal 8F–81
Installation 8F–81
Headlining 8F–82
Parts Location 8F–82
Removal 8F–82
Installation 8F–83
Rear Air Deflector 8F–84
Parts Location 8F–84
Removal 8F–84
Installation 8F–84
Roof Moulding 8F–86
Parts Location 8F–86
Removal 8F–86
Installation 8F–86
Windshield 8F–88
Parts Location 8F–88
Removal 8F–88
Installation 8F–89
Rear Quarter Side Glass 8F–93
Parts Location 8F–93
Removal 8F–93
Installation 8F–93
Tailgate Glass 8F–95
Parts Location 8F–95
Removal 8F–95
Installation 8F–96
Main Data and Specifications 8F–97
Special Tools 8F–107

Downloaded from www.Manualslib.com manuals search engine

Service Precaution

WARNING: THIS VEHICLE HAS A SUPPLEMENTAL RESTRAINT SYSTEM (SRS). REFER TO THE SRS COMPONENT AND WIRING LOCATION VIEW IN ORDER TO DETERMINE WHETHER YOU ARE PERFORMING SERVICE ON OR NEAR THE SRS COMPONENTS OR THE SRS WIRING. WHEN YOU ARE PERFORMING SERVICE ON OR NEAR THE SRS COMPONENTS OR THE SRS WIRING, REFER TO THE SRS SERVICE INFORMATION. FAILURE TO FOLLOW WARNINGS COULD RESULT IN POSSIBLE AIR BAG DEPLOYMENT, PERSONAL INJURY, OR OTHERWISE UNNEEDED SRS SYSTEM REPAIRS.

CAUTION: Always use the correct fastener in the proper location. When you replace a fastener, use ONLY the exact part number for that application. ISUZU will call out those fasteners that require a replacement after removal. ISUZU will also call out the fasteners that require thread lockers or thread sealant. UNLESS OTHERWISE SPECIFIED, do not use supplemental coatings (Paints, greases, or other corrosion inhibitors) on threaded fasteners or fastener joint interfaces. Generally, such coatings adversely affect the fastener torque and the joint clamping force, and may damage the fastener. When you install fasteners, use the correct tightening sequence and specifications. Following these instructions can help you avoid damage to parts and systems.

Frame

General Description

Proper frame alignment is important to assure normal vehicle life and performance of many other parts of the vehicle. If the vehicle has been involved in a fire, collision or has been overloaded, it is necessary to check the frame alignment.

Downloaded from www.Manualslib.com manuals search engine

Frame Dimensions

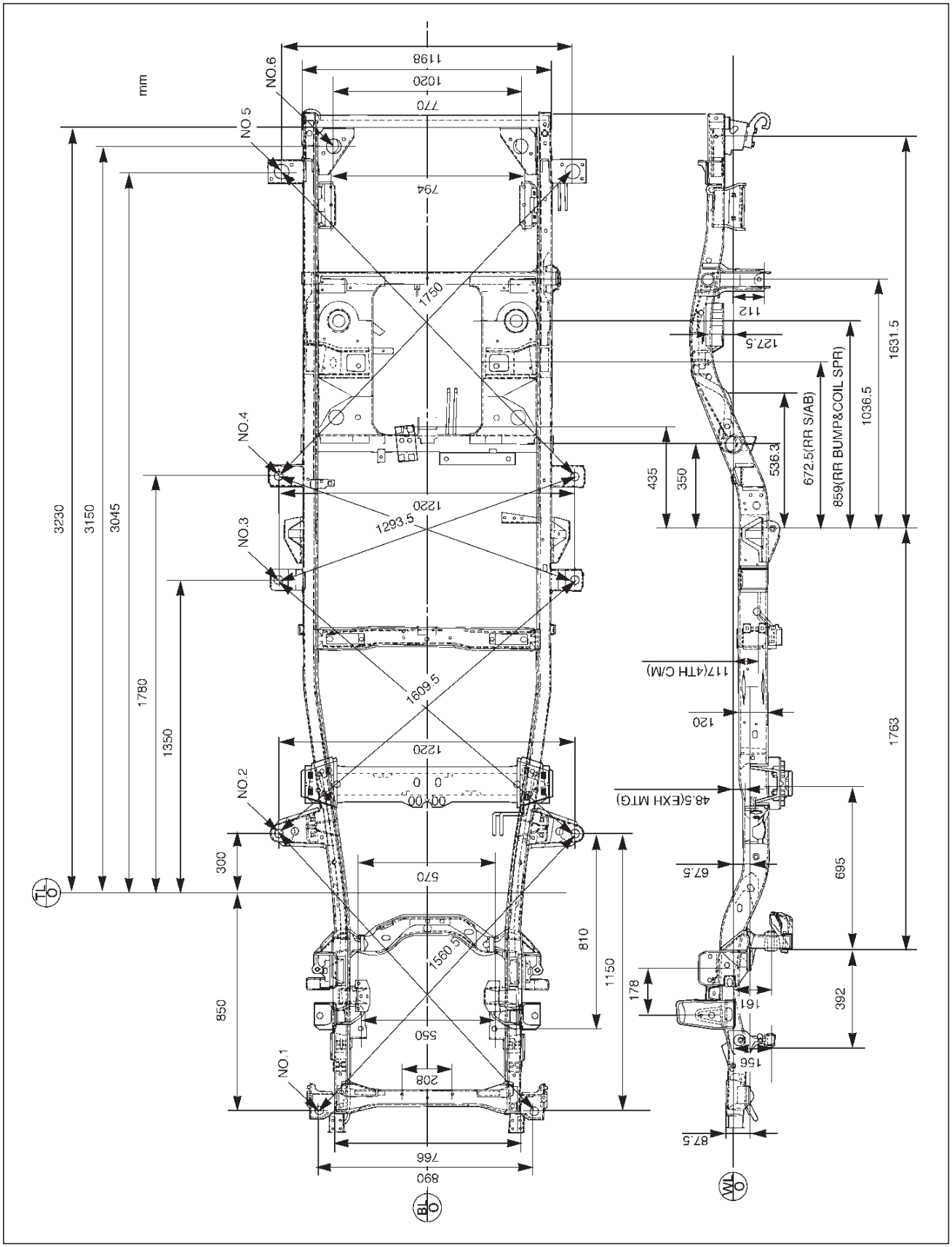

501RW013

Downloaded from www.Manualslib.com manuals search engine

General Description

This section describes how to remove and install front and rear bumpers. Each bumper is installed with two fixing bolts used on either side to fasten the backbar to the frame, a slider is used to fasten the bumper fascia to the fender panel. The bumpers can be removed by taking them out forward or backward after removing the two fixing bolts on either side.

Front Bumper

Parts Location

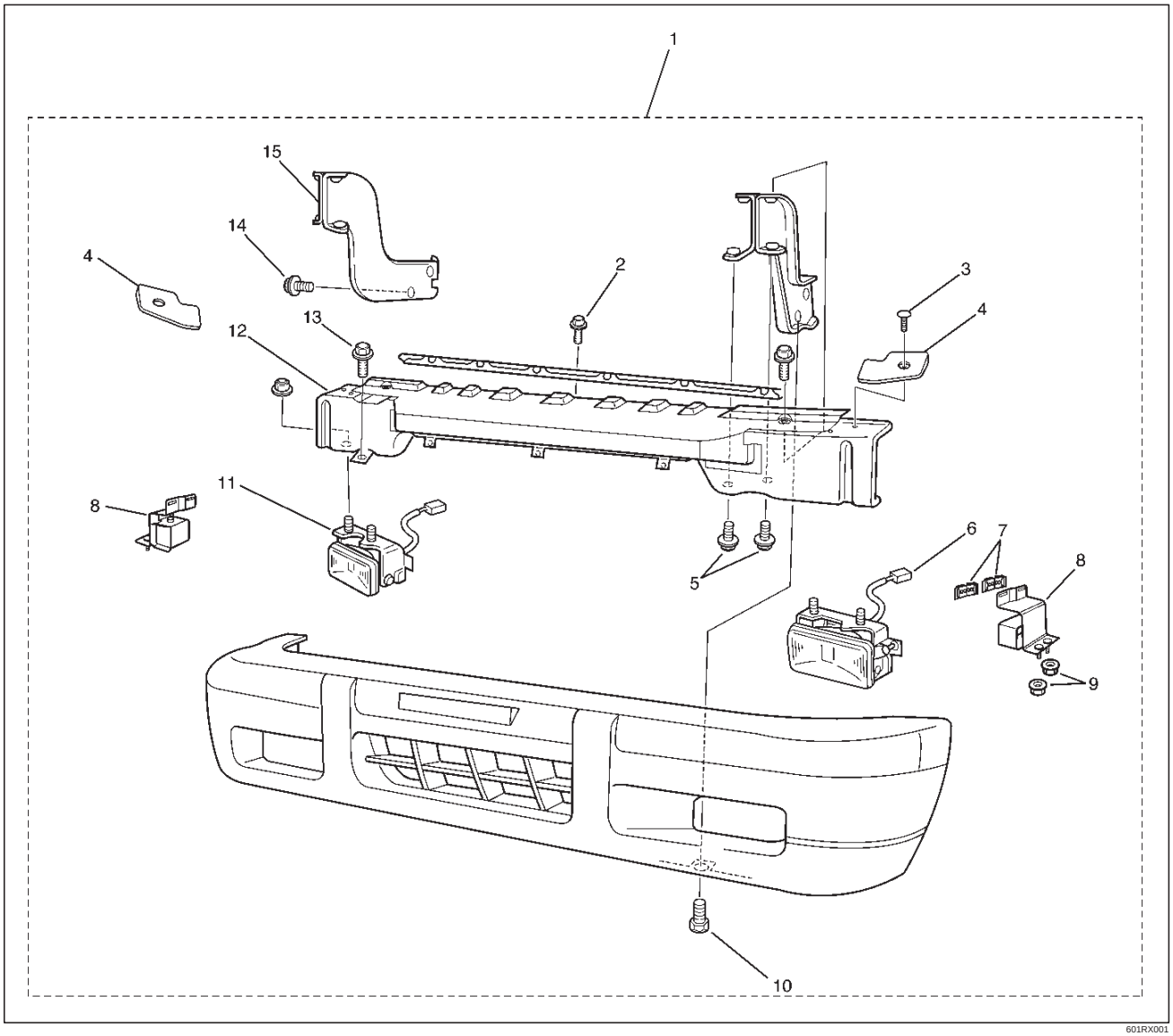

601RX001

Legend

(1) Front Bumper Assembly
(2) Front Bumper Retainer Bolt
(3) Clip
(4) Bumper Spacer Support
(5) Back Bar Fixing Bolt
(6) Front Fog Light Connector
(7) Front Bumper Slider Fixing Clip
(8) Front Bumper Slider
(9) Front Bumper Slider Fixing Nut
(10) Bumper Fascia Lower Bolt
(11) Front Fog Light Assembly
(12) Reinforce Assembly
(13) Reinforce Lower Bolt
(14) Front Bumper Fixing Bolt
(15) Back Bar

Downloaded from www.Manualslib.com manuals search engine

Removal

1. Remove front fog light connector.
2. Remove front bumper assembly fixing bolt.
   - Remove the two bolts from both sides of the front bumper.

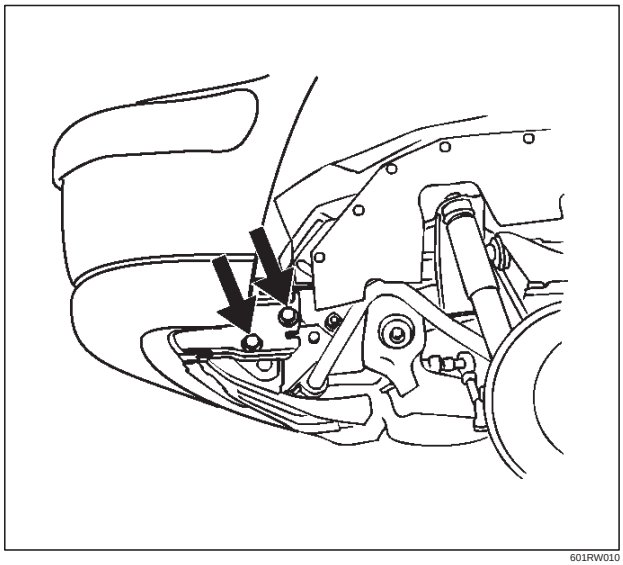

601RW010

3. Remove front bumper assembly.
4. Remove bumper fascia lower bolts.
5. Remove front bumper retainer.
6. Remove reinforce lower bolts.
   - Loosen the five bolts and release claws.
7. Remove reinforce assembly.
8. Remove backbar fixing bolts.
   - Remove the four bolts at each backbar.
9. Remove front fog light assembly.
10. Remove the front bumper slider(1).
    - Remove the two clips(4) and the two nuts(3), and release the claw from the washer(2).

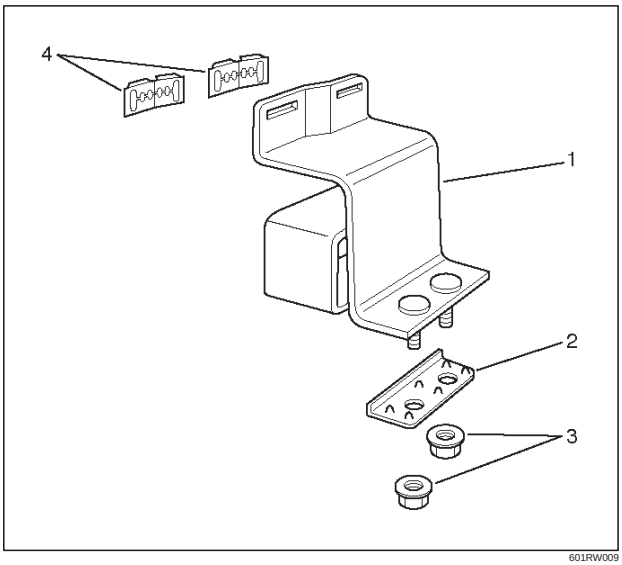

601RW009

Installation

To install, follow the removal steps in reverse order noting the following points:

1. Tighten the front bumper assembly fixing bolts to the specified torque.

   Torque: 132 N•m (98 lb ft)

Front Bumper Slider Bracket

Removal

1. Remove the Front bumper.
   - Refer to Front Bumper in this section.
2. Remove the three nuts(1) and draw out the slider bracket(2).

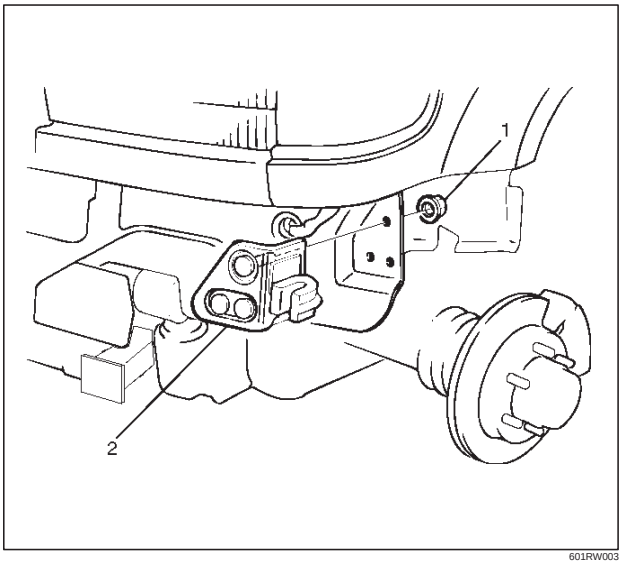

601RW003

Installation

To install, follow the removal steps in reverse order.

Downloaded from www.Manualslib.com manuals search engine

Rear Bumper

Parts Location

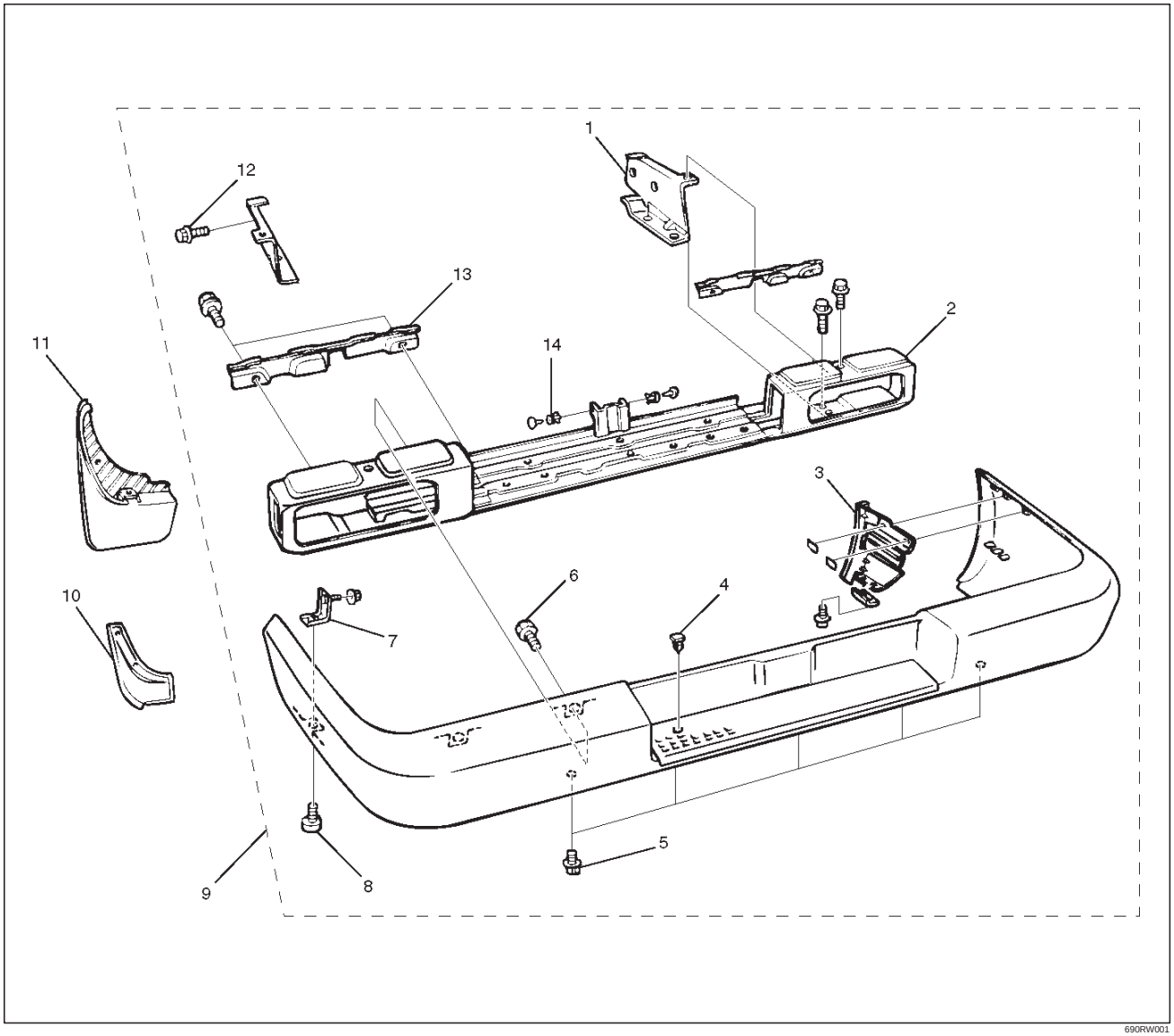

690RW001

Legend

(1) Back Bars
(2) Reinforce Assembly
(3) Rear Bumper Slider Brackets
(4) Rear Step Clips
(5) Reinforce Lower Bolts
(6) Reinforce Upper Bolts
(7) Rear Bumper Fascia Brackets
(8) Rear Bumper Fascia Bracket Screws
(9) Rear Bumper Assembly
(10) Rear Bumper Side Covers
(11) Mud Flaps
(12) Rear Bumper Assembly Fixing Bolts
(13) Rear Bumper Retainers
(14) Clips

Removal

1. Remove rear bumper side covers.
2. Remove mud flaps.
   - Remove three screws.
3. Remove bumper fascia bracket screws.

Downloaded from www.Manualslib.com manuals search engine

4. Remove rear bumper assembly fixing bolts.
   - Remove two bolts from each side.

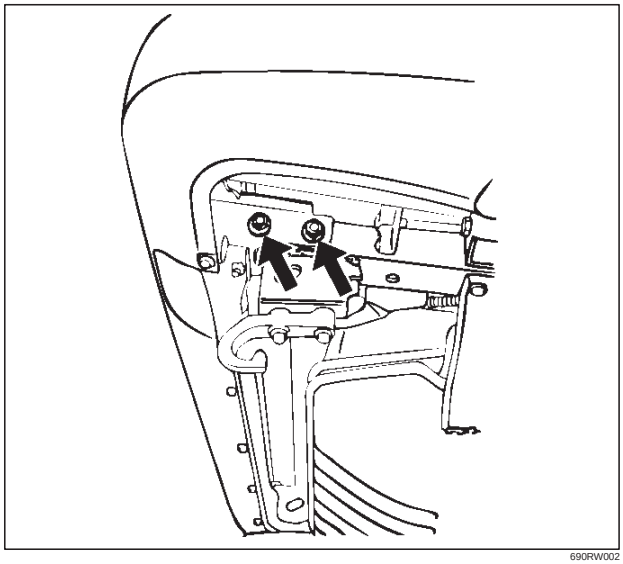

690RW002

5. Remove rear bumper assembly.
6. Remove rear bumper retainers.
7. Remove reinforce upper bolts.
   - Remove the rear bumper retainer from each side, and then remove two upper bolts.
8. Remove reinforce lower screws.
9. Remove clips.
10. Remove rear step clips.
11. Remove reinforce assembly.
    - Pull out both ends of the bumper fascia and take out the reinforce assembly.
12. Remove backbars.
    - Remove the three bolts from each backbar.
13. Remove rear bumper slider brackets(4).
    - Remove the two clips(1) and two screws(3), and then remove claw caught in the washer(2).

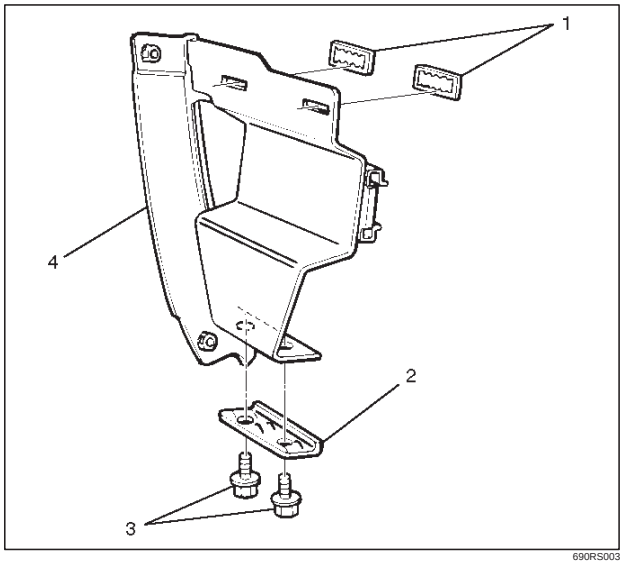

690RS003

14. Remove bumper fascia brackets.
    - Remove the fixing nut on the back side of the fender panel.

Installation

To install, follow the removal steps in reverse order noting the following points:

1. Tighten the front bumper assembly fixing bolts to the specified torque.

   Torque: 132 N•m (98 lb ft)

2. Apply chassis grease to the slider and the slider bracket moving surface.

Downloaded from www.Manualslib.com manuals search engine

Rear Bumper Slider

Removal

1. Remove the rear bumper.
   - Refer to Rear Bumper in this section.
2. Remove the three bolts (2).
3. Remove rear bumper slider (1).

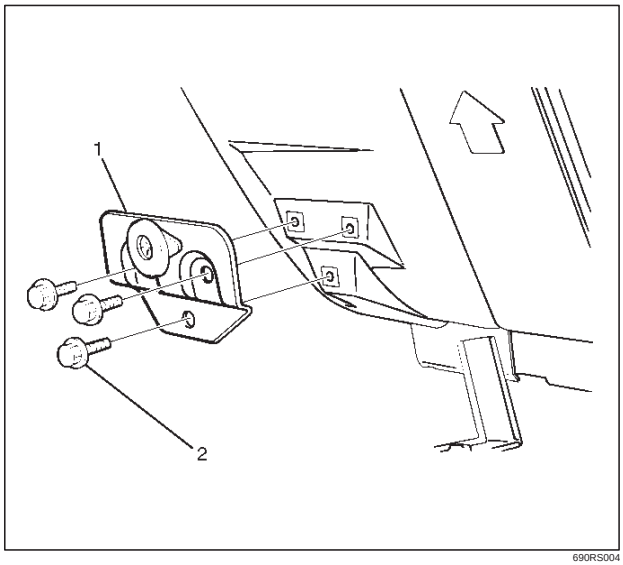

690RS004

Installation

To install, follow the removal steps in reverse order noting the following points:

1. Apply chassis grease to the slider and the slider bracket moving surface.

Downloaded from www.Manualslib.com manuals search engine

General Description

This section includes items of front end sheet metal that are attached by bolts, screws or clips and related accessory components.

Anti-corrosion materials have been applied to the interior surfaces of some metal panels to provide rust resistance. When servicing these panels, areas on which this material has been disturbed should be properly recoated with service-type anti-corrosion material.

Cowl Cover

Parts Location

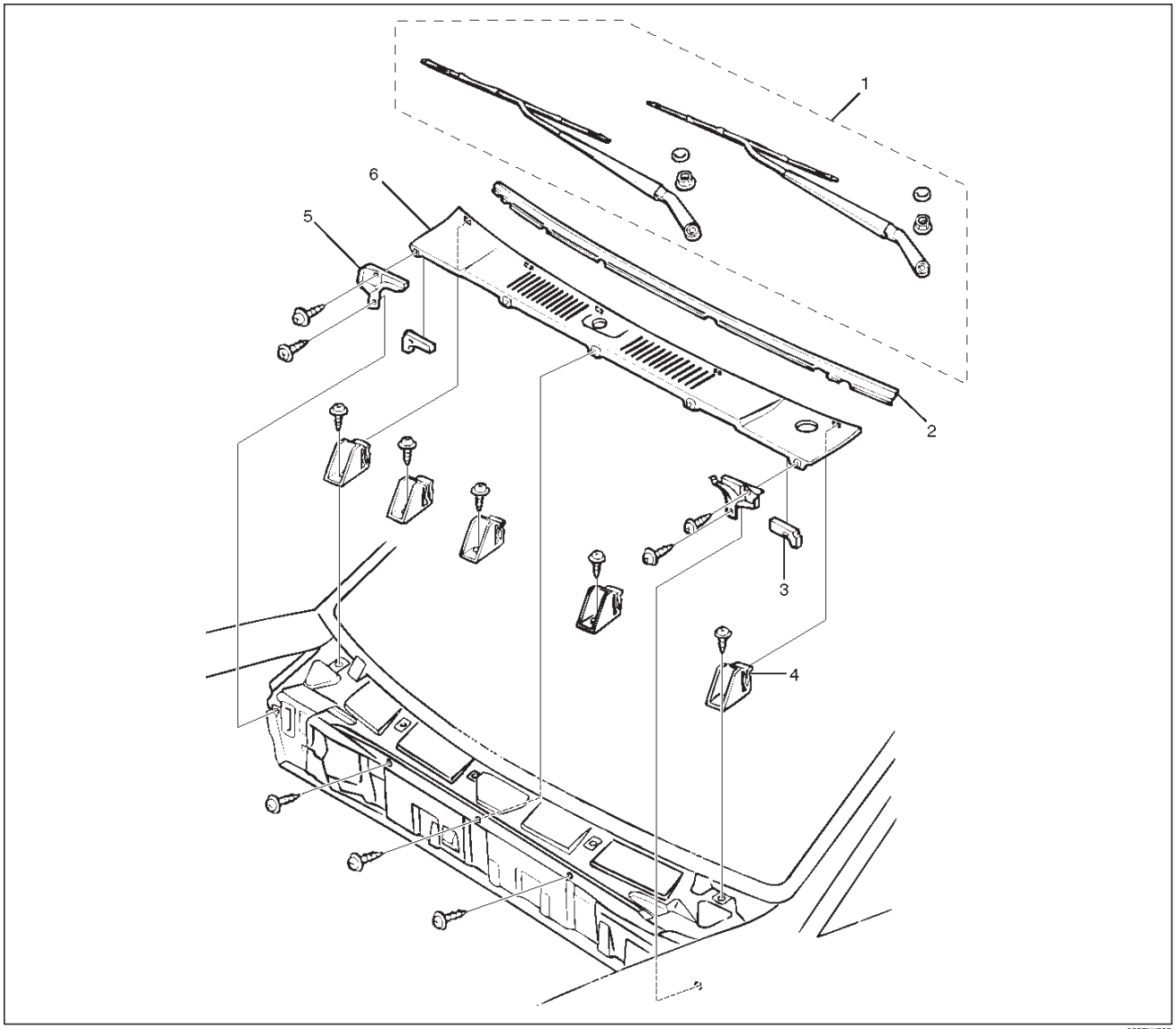

605RW003

Legend

(1) Front Wiper Arms
(2) Front Window Lower Molding
(3) Cowl Cover Seals
(4) Cowl Cover Stoppers
(5) Cowl Cover Brackets
(6) Cowl Cover

Removal

1. Open the hood.
2. Support the hood.
3. Remove front wiper arms.
   - Refer to Windshield Wiper Arm/Blade in Wiper/Washer System section.
4. Remove front window lower molding.

Downloaded from www.Manualslib.com manuals search engine

5. Remove cowl cover brackets.
   - Disconnect two screws each side.
6. Remove cowl cover.
   - Disconnect three screws.
7. Remove cowl cover seals.
8. Remove cowl cover stoppers.

Installation

To install, follow the removal steps in reverse order.

Engine Hood

Removal

1. Open the hood.
2. Support the hood.
3. Remove windowshield washer nozzle tube.

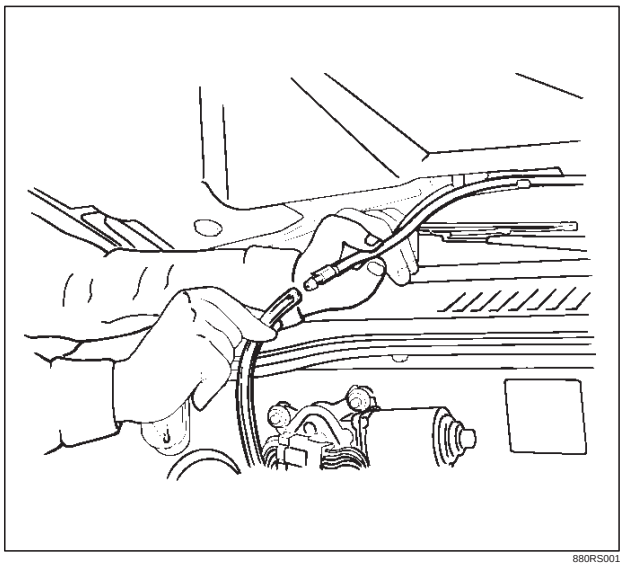

880RS001

4. Remove hood hinge bolts (3).
   - Before removing the hinges from the Engine hood (1), scribe a mark (2) showing location of the hinges to facilitate installation in the original position.

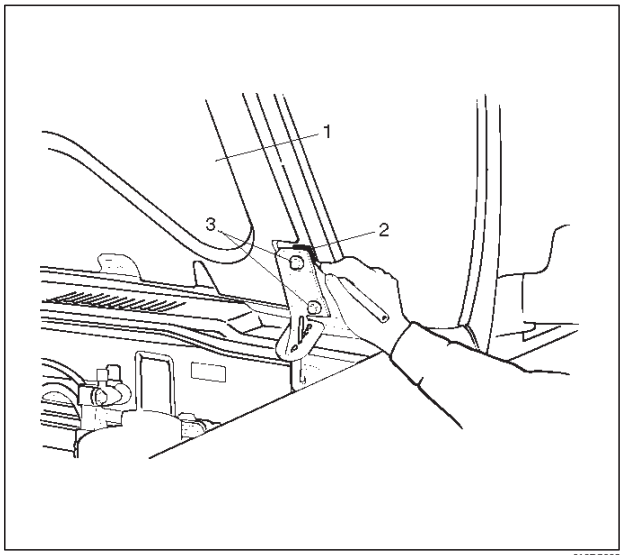

610RS003

5. Remove engine hood.

Installation

To install, follow the removal steps in the reverse order noting the following points:

1. Tighten the engine hood fixing bolts to the specified torque.

   Torque: 13 N•m (113 lb in)

2. Adjust the engine hood mounting gap with reference to Body Dimension in this section.
3. Check and see if the engine hood lock operates normally.

Downloaded from www.Manualslib.com manuals search engine

Engine Hood Hinge

Parts Location

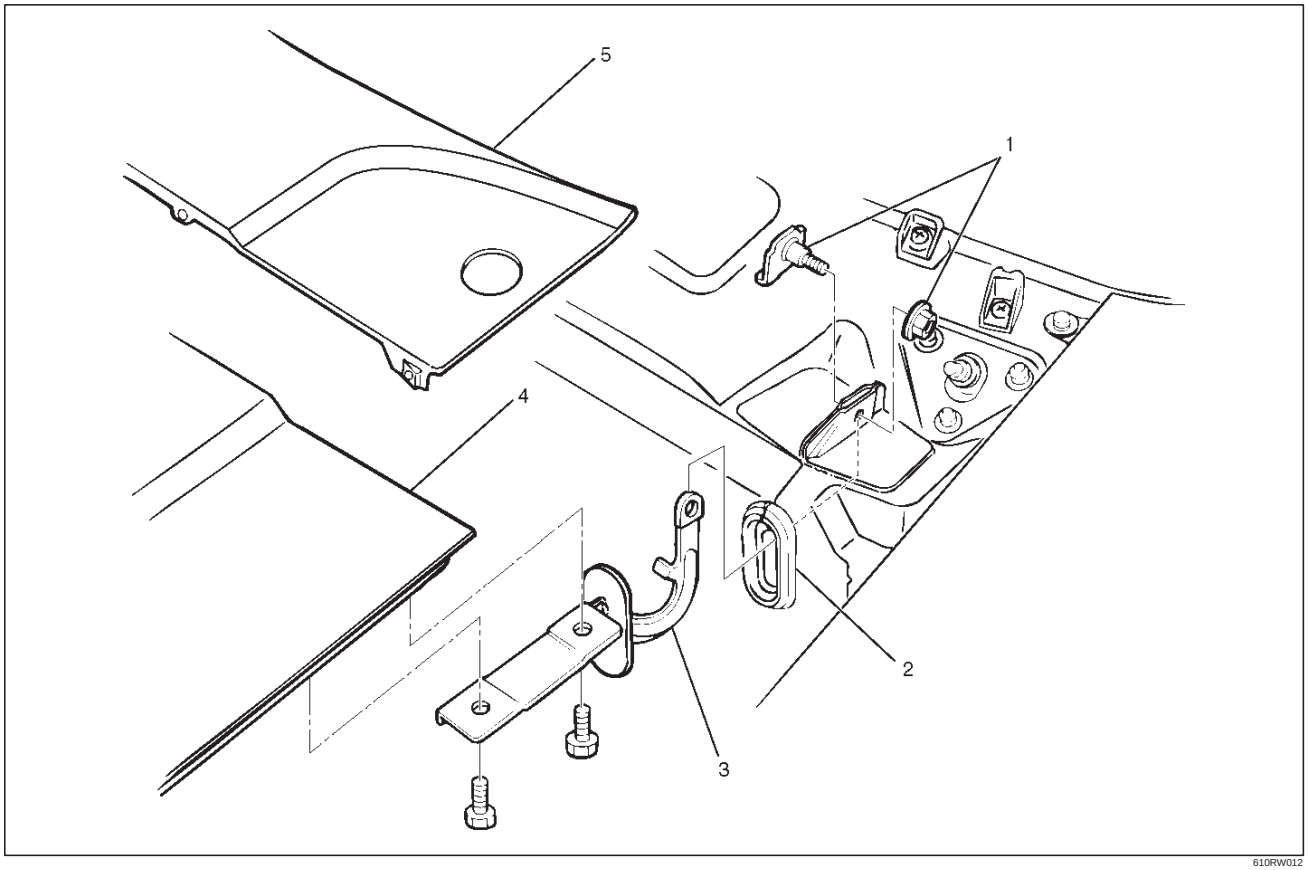

610RW012

Legend

(1) Hinge Fixing Bolts And Nuts
(2) Hood End Seal
(3) Engine Hood Hinge
(4) Engine Hood
(5) Cowl Cover

Removal

1. Remove cowl cover.
   - Refer to Cowl Cover in this section.
2. Remove engine hood.
   - Refer to Engine Hood in this section.
3. Remove hinge fixing bolt and nut.
4. Remove engine hood hinge.
5. Remove hood end seal.

Installation

To install, follow the removal steps in reverse order noting the following points:

1. Tighten the hood hinge fixing bolt and nut to the specified torque.

   Torque 13 N•m (113 lb in)

Downloaded from www.Manualslib.com manuals search engine

Engine Hood Lock

Parts Location

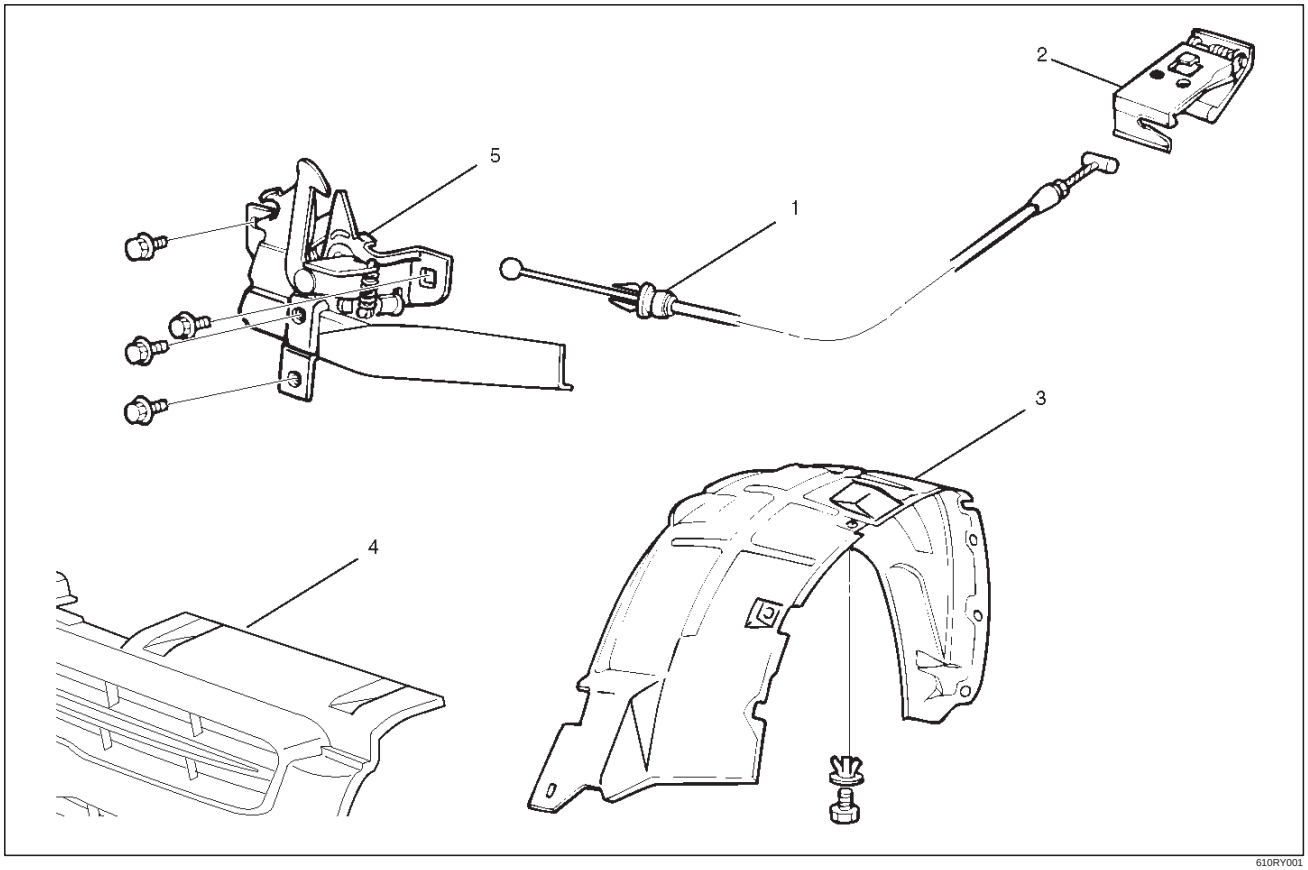

610RY001

Legend

(1) Control Cable
(2) Hood Lock Control Lever
(3) Inner Liner
(4) Radiator Grille
(5) Engine Hood Lock Assembly

Removal

1. Remove hood lock control lever.
2. Remove inner liner.
3. Remove control cable.
   - Remove the cable fixing clips from the body panel.
4. Remove radiator grille.
   - Refer to Radiator Grille And Front End Lower Panel in this section.
5. Remove engine hood lock assembly.
   - Apply setting marks (1) to the hood lock assembly and the body prior to removal.

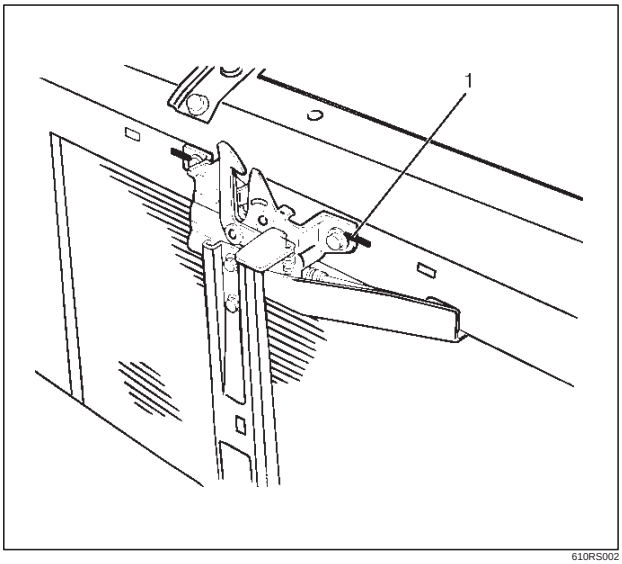

610RS002

Downloaded from www.Manualslib.com manuals search engine

Installation

To install, follow the removal steps in reverse order noting the following points:

1. Reroute the control cable to its original position, and check and see if the lock assembly and control lever work normally.
2. Tighten the hood lock assembly fixing bolts to the specified torque.

Torque : 10 N•m (87 lb in)

Radiator Grille And Front End Lower Panel

Parts Location

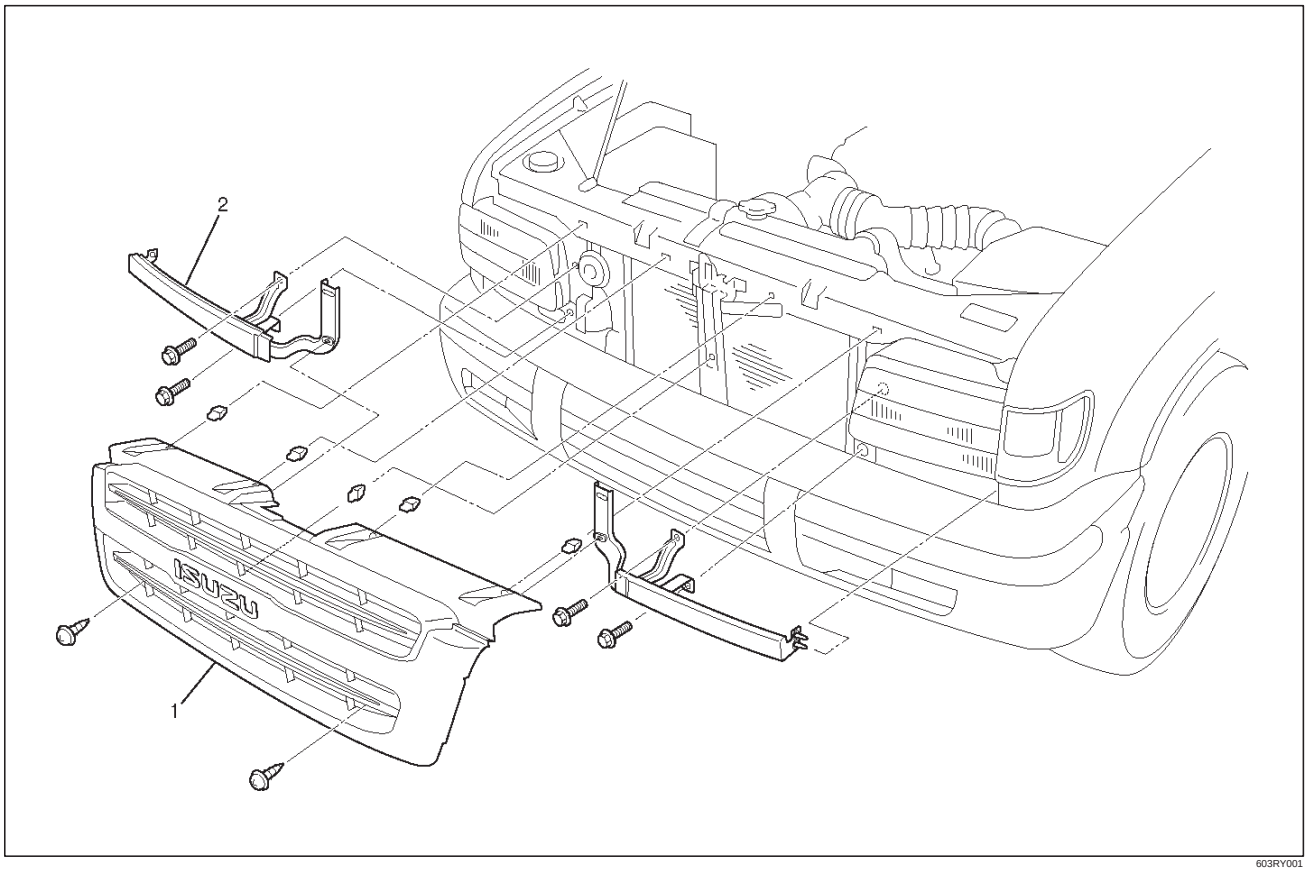

603RY001

Legend

(1) Radiator Grille
(2) Front End Lower Panel

Removal

1. Open the hood.
2. Support the hood.

Downloaded from www.Manualslib.com manuals search engine

3. Remove radiator grille.
   - Raise the five clips on the radiator grille and remove two screws.

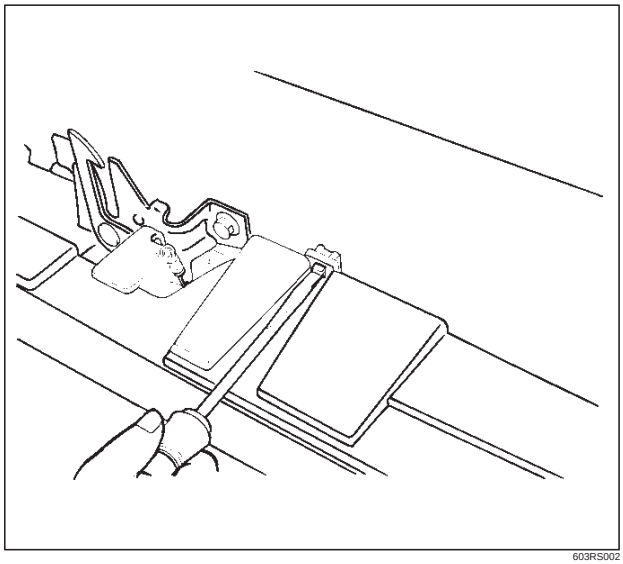

603RS002

4. Remove front end lower panel.
   - Remove two fixing bolts and remove the panel from the fender.

Installation

To install, follow the removal steps in reverse order, noting the following point.

1. Install the radiator grille clips remaining on the body side in the radiator grille, and then install the radiator grille on the body.

Downloaded from www.Manualslib.com manuals search engine

Front Fender Panel

Parts Location

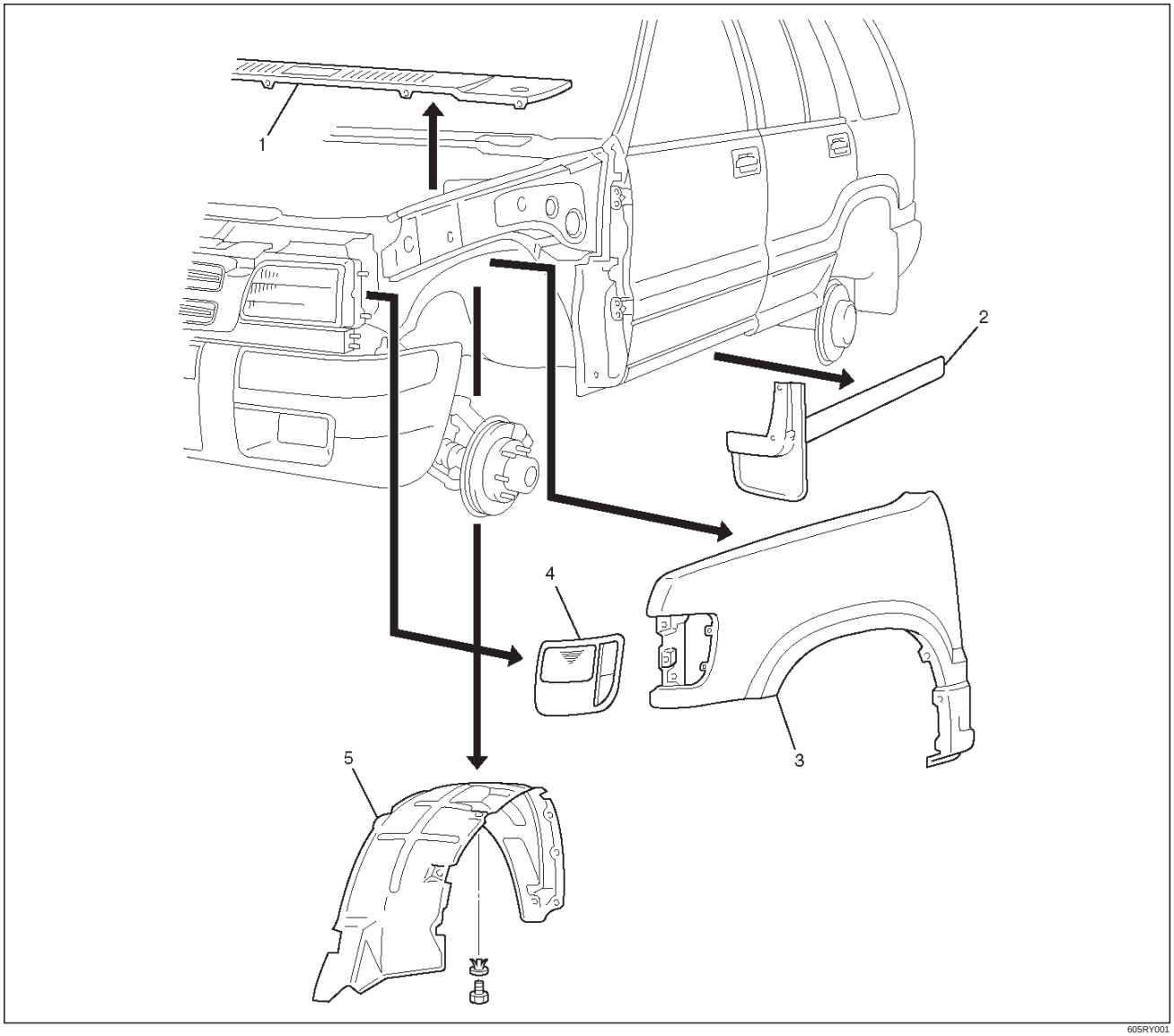

Legend

(1) Cowl Cover
(2) Front Mud Flap
(3) Front Fender Panel
(4) Front Combination Lamp Assembly
(5) Inner Liner

Removal

1. Open the hood.
2. Support the hood.
3. Remove cowl cover.
   - Refer to Cowl Cover in this section.
4. Remove front combination lamp assembly.
   - Disconnect fixing screw and connector.
5. Remove front mud flap.
   - Disconnect three fixing screws and four clips.
6. Remove inner liner.

Downloaded from www.Manualslib.com manuals search engine

7. Remove front fender panel.
   - Disconnect ten fixing bolts and two nuts.

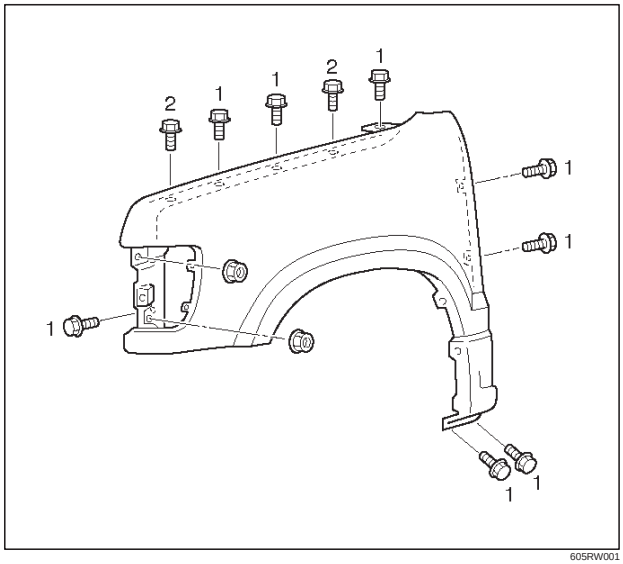

605RW001

Installation

To install, follow the removal steps in the reverse order noting the following points:

1. Tighten the front fender panel fixing bolts to the specified torque.

   (1) Torque : 9 N•m (78 lb in)

   (2) Torque : 7 N•m (61 lb in)

Downloaded from www.Manualslib.com manuals search engine

Body Mounting

Parts Location

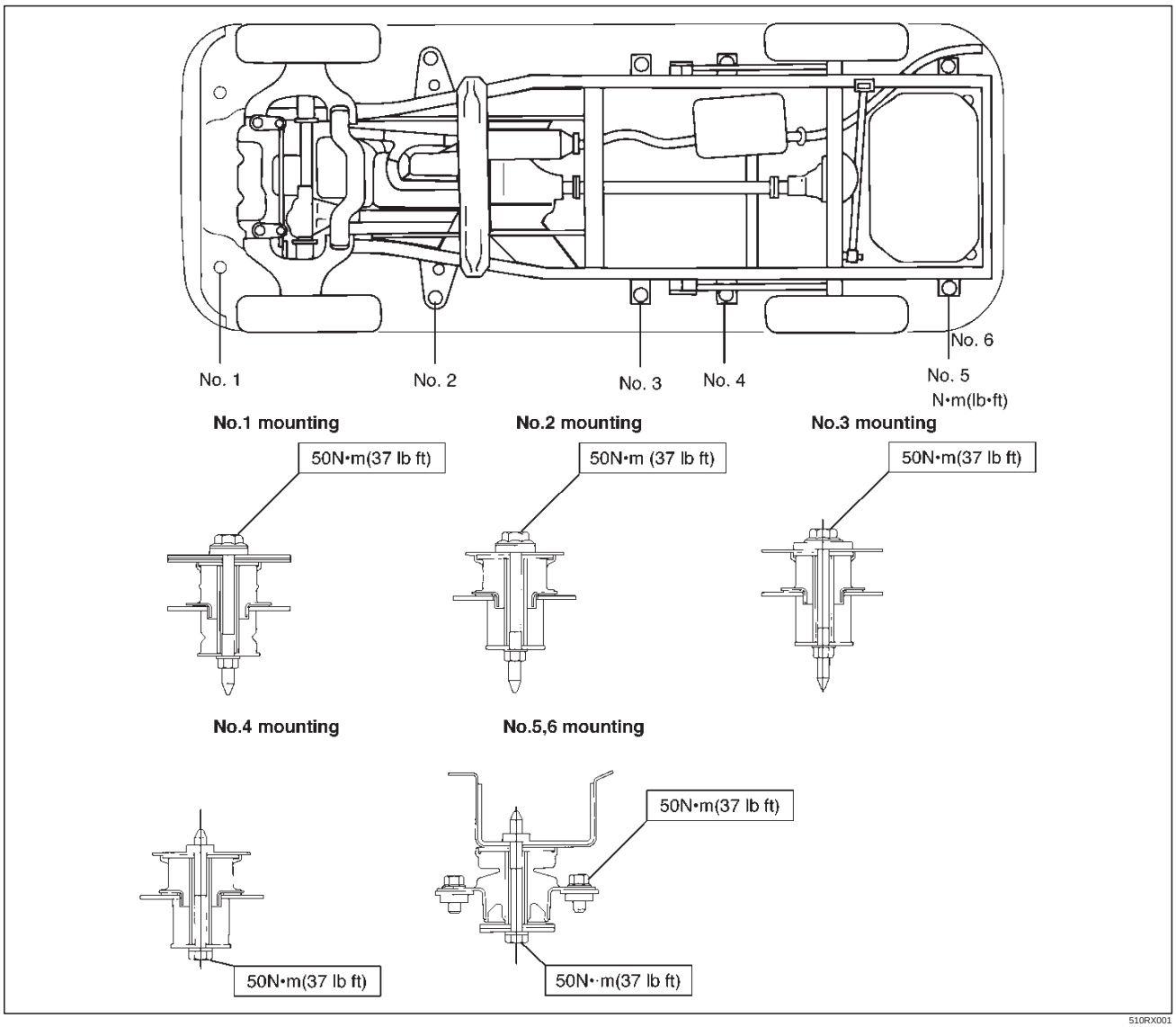

510RX001

Removal (No.1 – No. 2)

1. Remove the front bumper.
2. Jack up the vehicle by the frame.
3. Support the front side sill and rear axle with stands. Further, support the front jack up point with a jack.

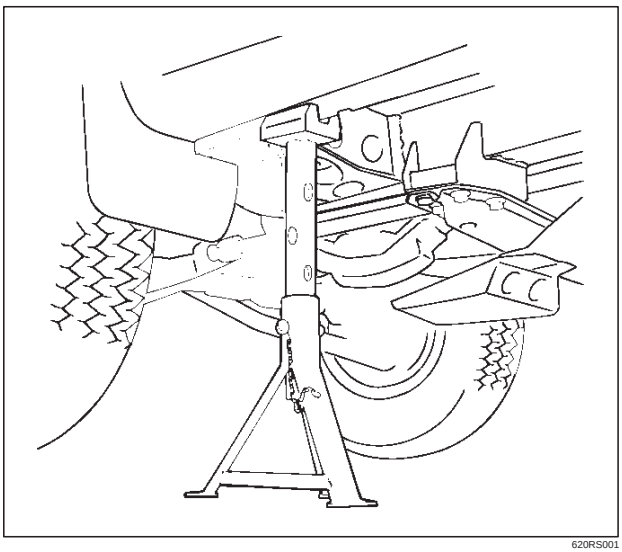

620RS001

Downloaded from www.Manualslib.com manuals search engine

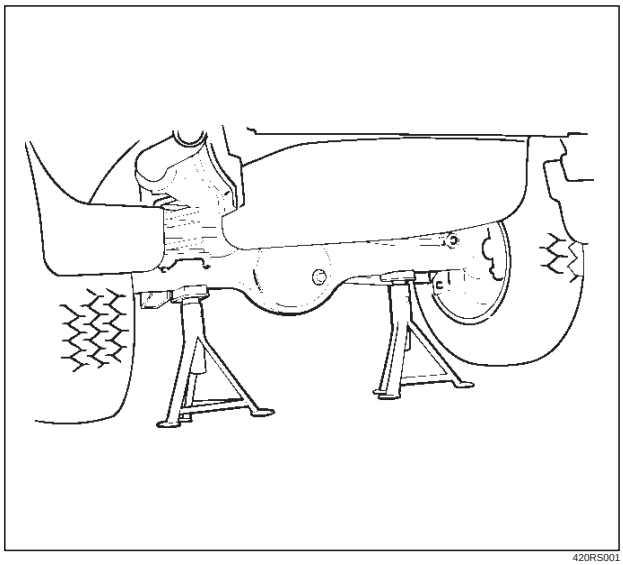

420RS001

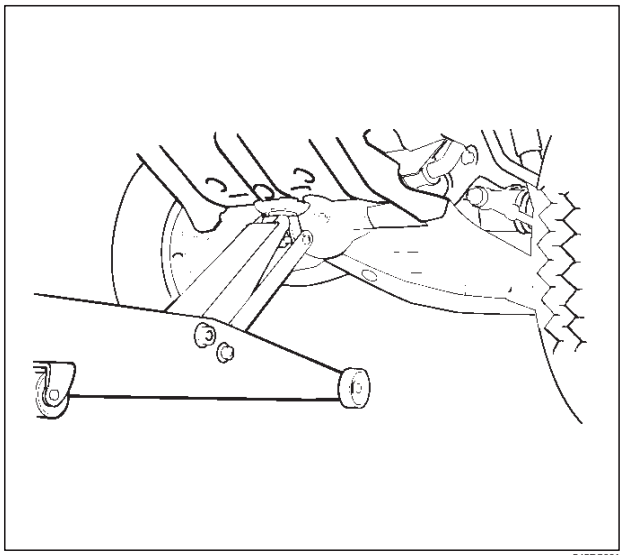

545RS001

4. Remove the mounting bolts (No. 1-4) on either side.
   - No. 1 – Hold in check not to turn from the inside of the front fender.
   - No. 2 – Remove the front door sill plate and dash side trim panel, turn over the floor carpet and hold the bolt in check not to turn.
   - No. 3 – Remove the rear door sill plate and center pillar lower trim cover, turn over the floor carpet and hold the bolt in check not to turn.
   - No. 4 – Remove the bolt from under the frame.
5. Loosen the mounting bolts (No. 5-6) on either side.
6. Remove the frame side mounting and washer.
7. Gently lower the jack supporting the front axle until the cab side mounting can be removed.
8. Remove the cab side mounting.
   - Be sure to use a splice bar around the mounting to be removed.

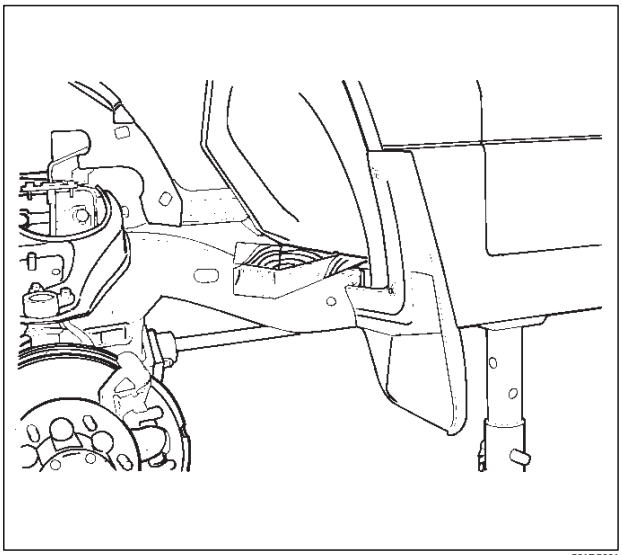

501RS001

Removal (No. 3 — No. 6)

1. Remove the rear bumper.
2. Jack up the vehicle by the frame.
3. Support the rear side sill and frame stands, and support the rear axle with a jack.

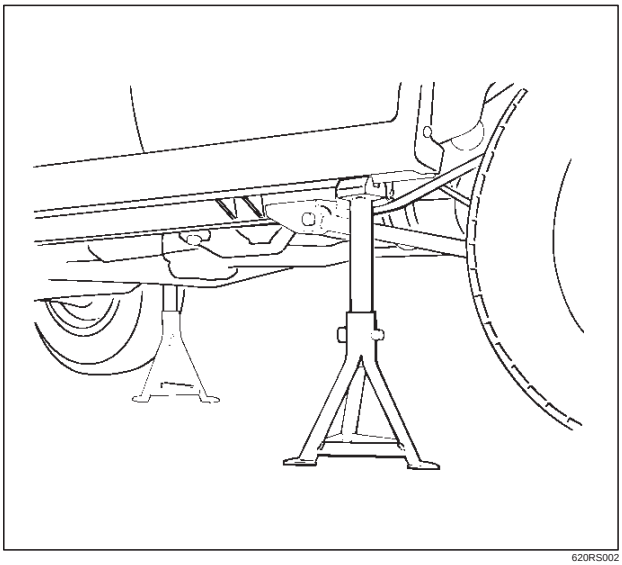

620RS002

Downloaded from www.Manualslib.com manuals search engine

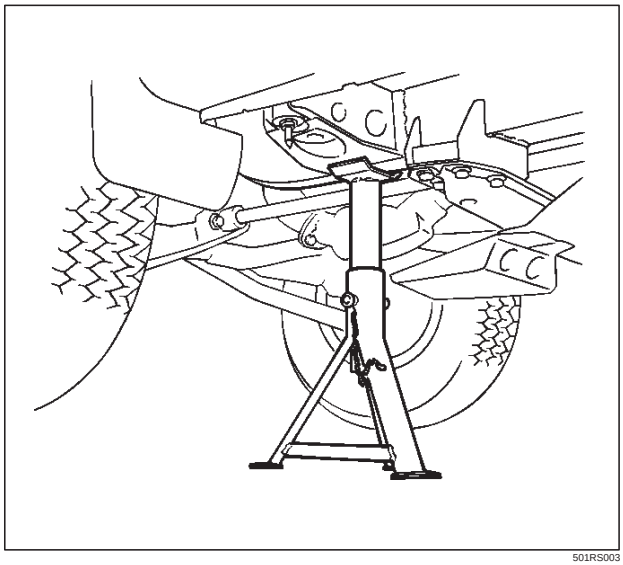

501RS003

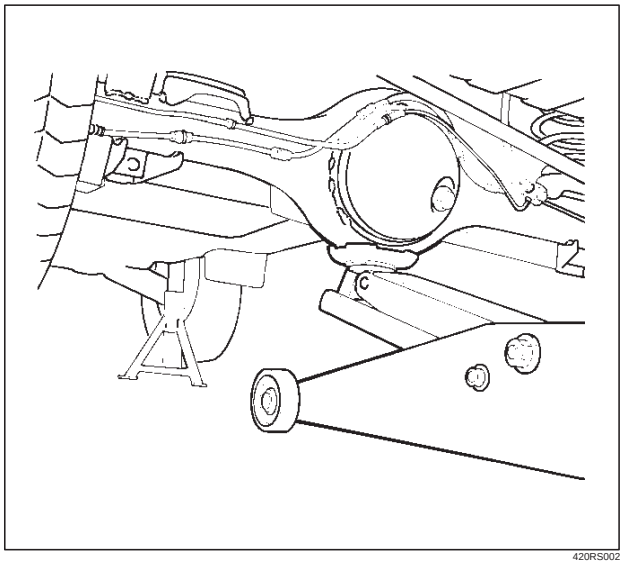

420RS002

4. Remove the mounting bolts (No. 3-6) on either side.
   - No. 3 — Remove the rear door sill plate and center pillar lower-trim cover, turn over the floor carpet and hold the bolt in check not to turn.
   - No. 4, 5 and 6 — Remove the bolts from the lower side of the frame.
5. Remove the frame side mounting and washer.
6. Gently lower the jack supporting the rear axle until the cab side mounting can be removed.
7. Remove the cab side mounting.
   - Be sure to use a splice bar around the mounting to be removed.
   - As for No. 5 and 6, remove the frame side bracket fixing bolts after lowering the frame gently.

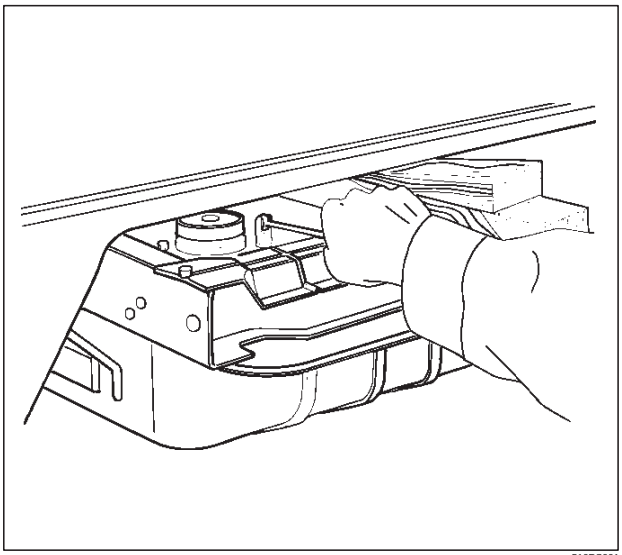

510RS001

Installation

To install, follow the removal steps in the reverse order, noting the following point:

1. Tighten each mounting bolt to the specified torque.

   Torque : 50 N•m (37 lb ft)

Downloaded from www.Manualslib.com manuals search engine

General Description

This section describes major items of the removal, installation and servicing procedures pertaining to the TROOPER body. Each servicing instruction is applicable to all models of the TROOPER, unless otherwise specifically mentioned. For those differing by specific models from the common procedures, they are detailed for each model.

Downloaded from www.Manualslib.com manuals search engine

Body Dimension

Upper Body

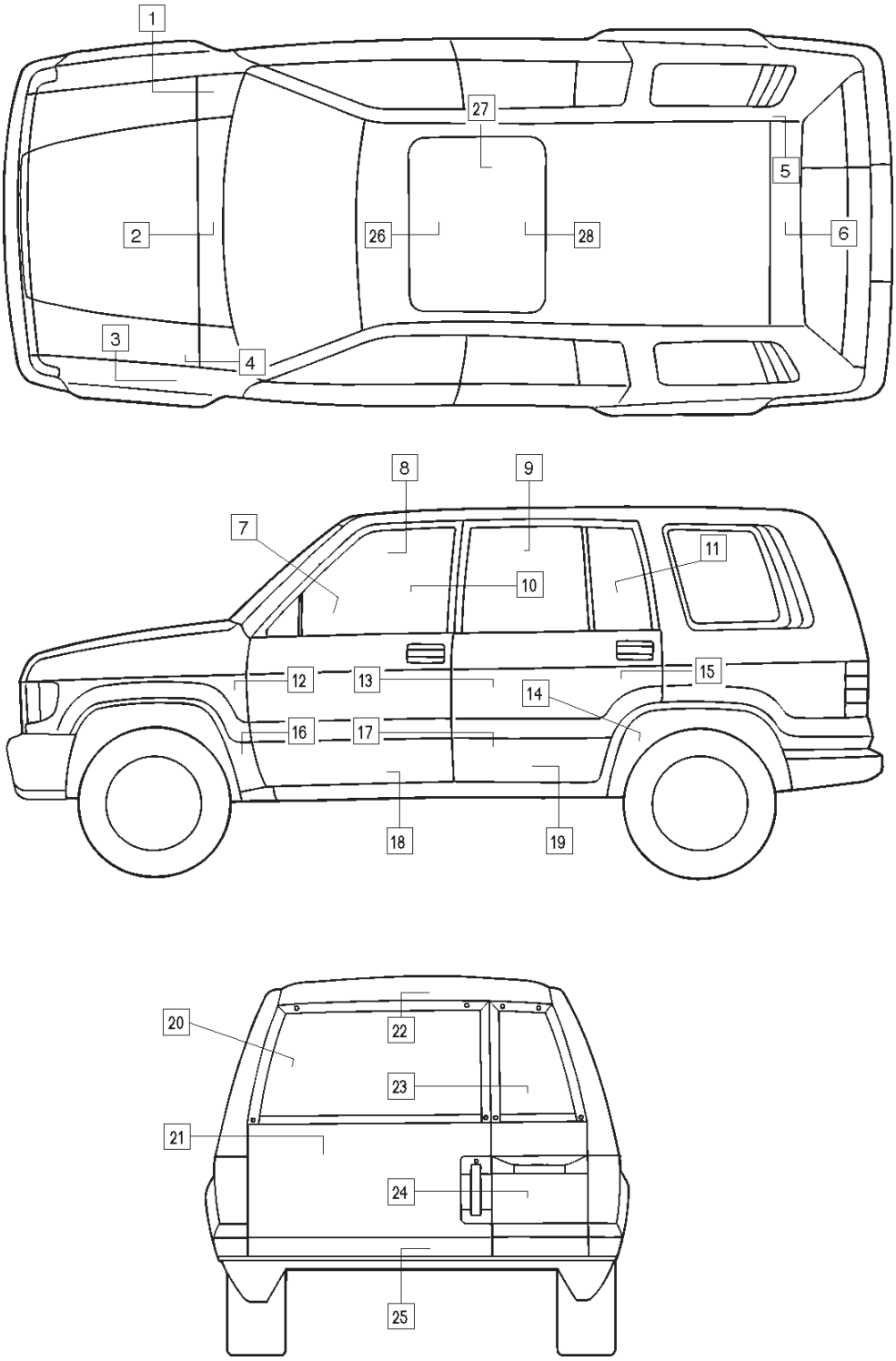

A10RW001

Downloaded from www.Manualslib.com manuals search engine

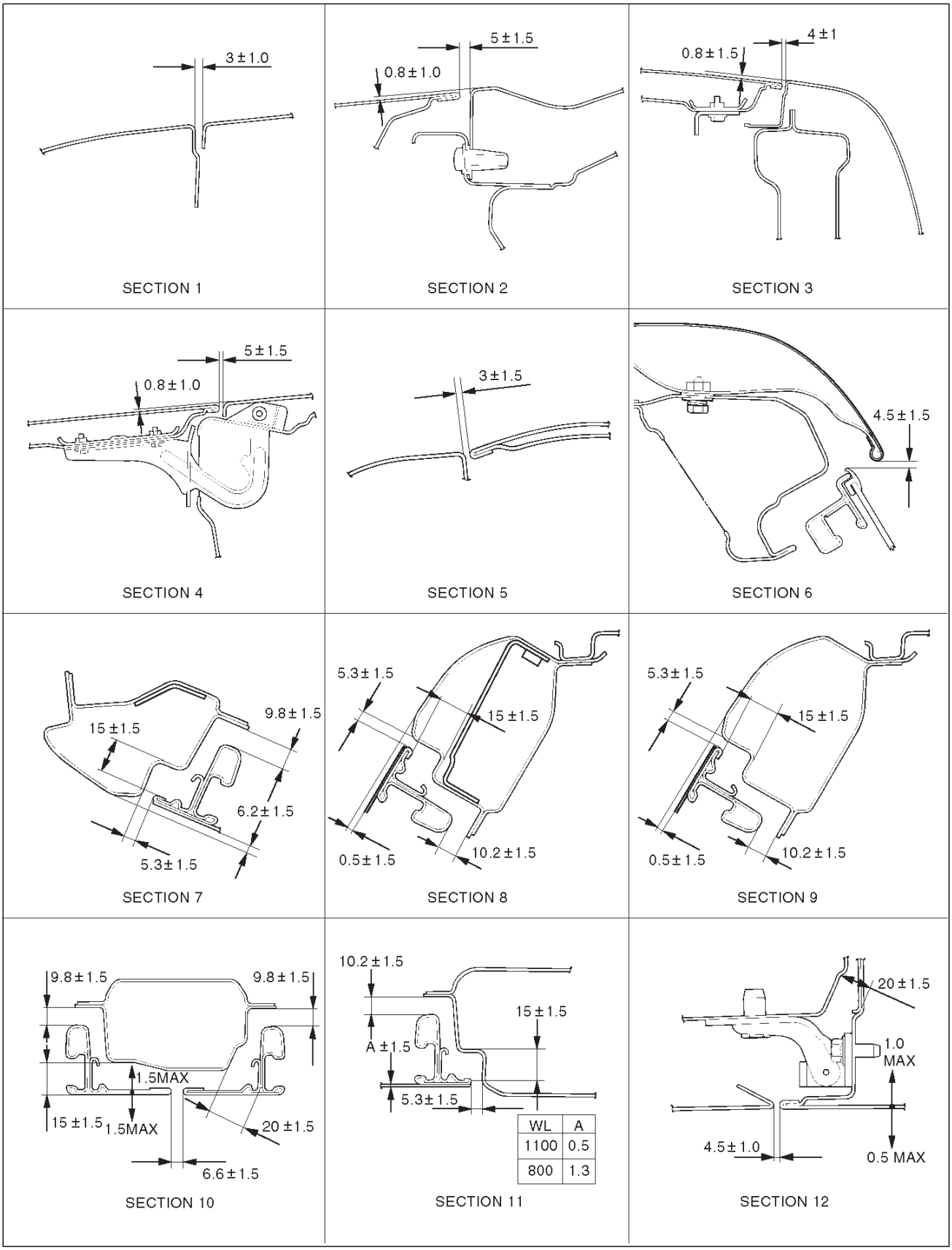

A10RY00001

Downloaded from www.Manualslib.com manuals search engine

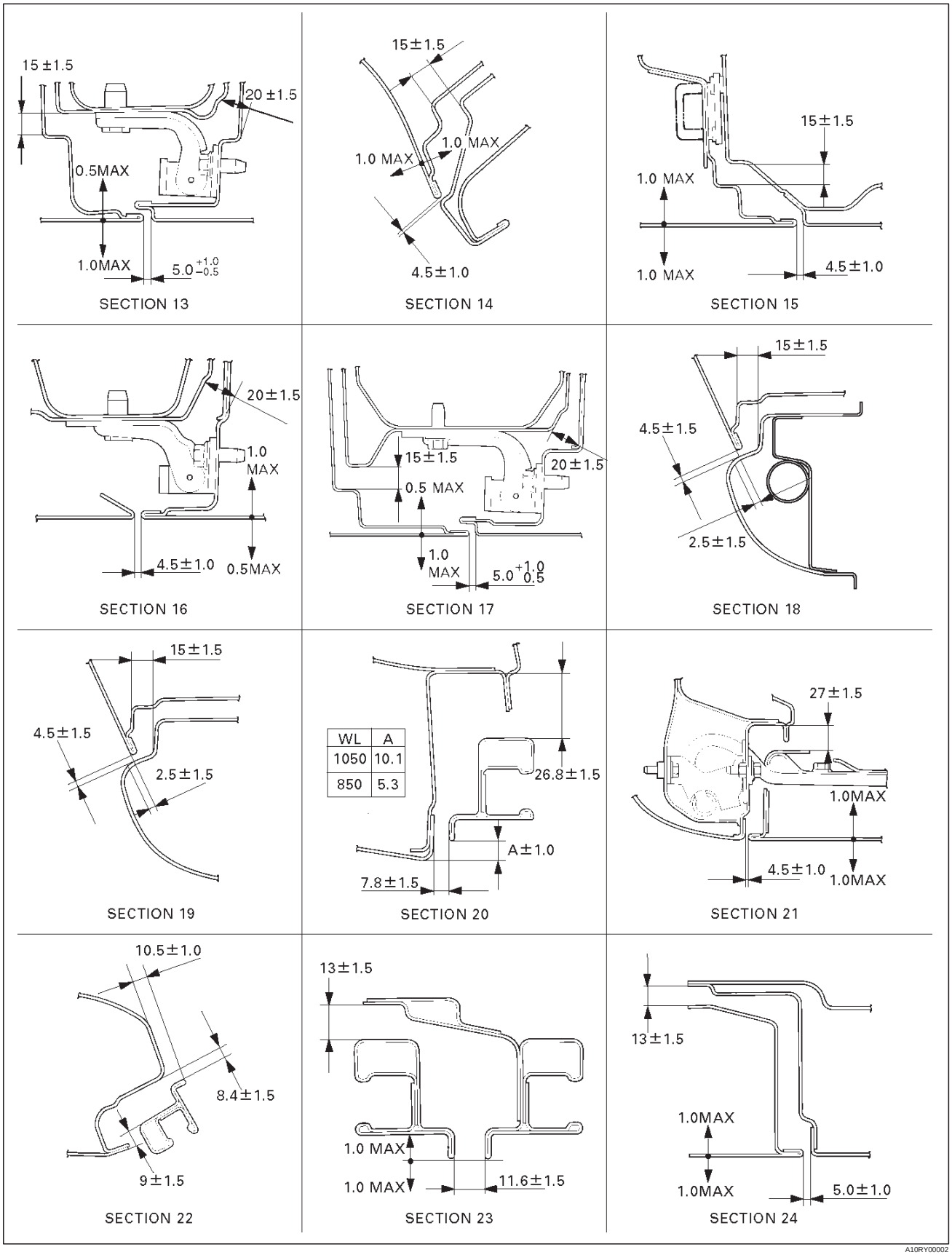

A10RY00002

Downloaded from www.Manualslib.com manuals search engine

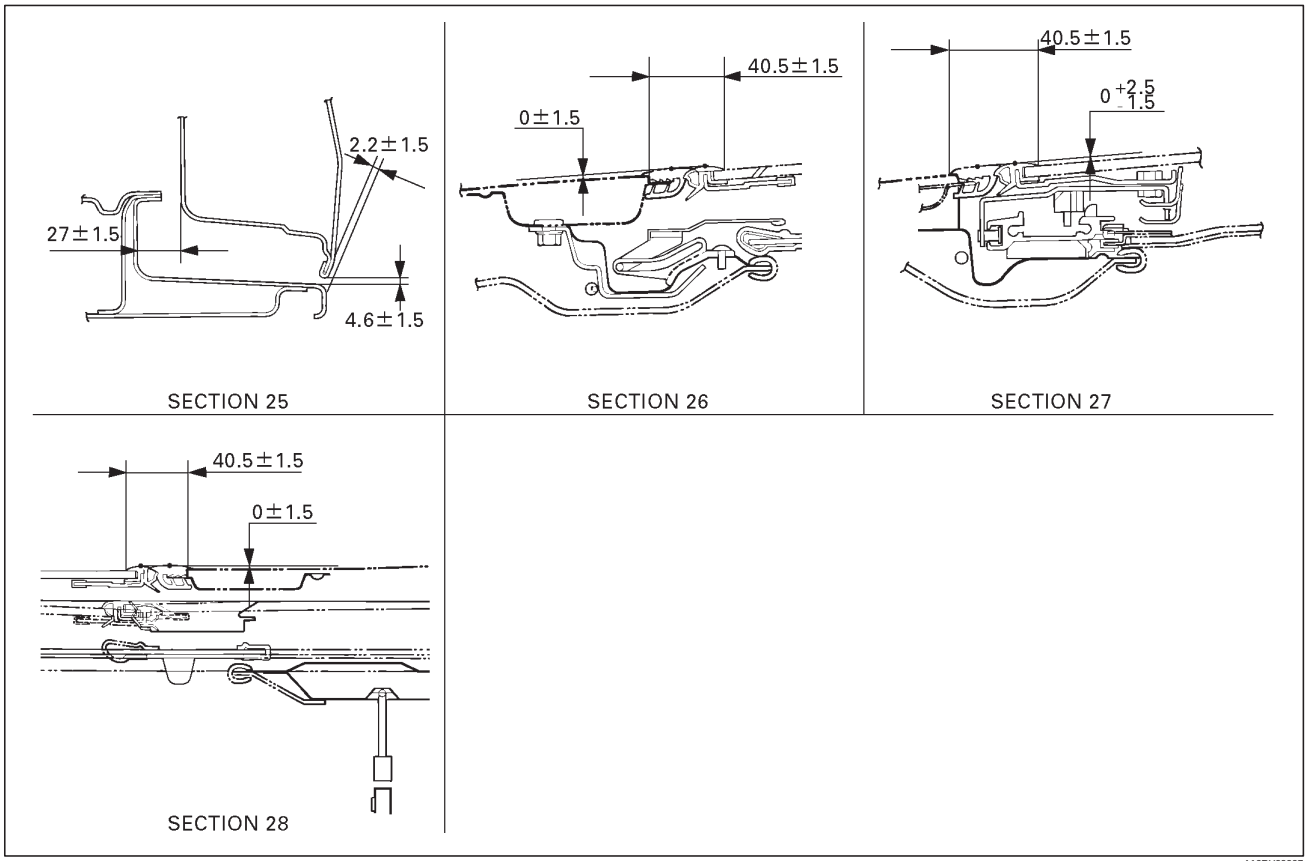

A10RY00007

Downloaded from www.Manualslib.com manuals search engine

Front Section

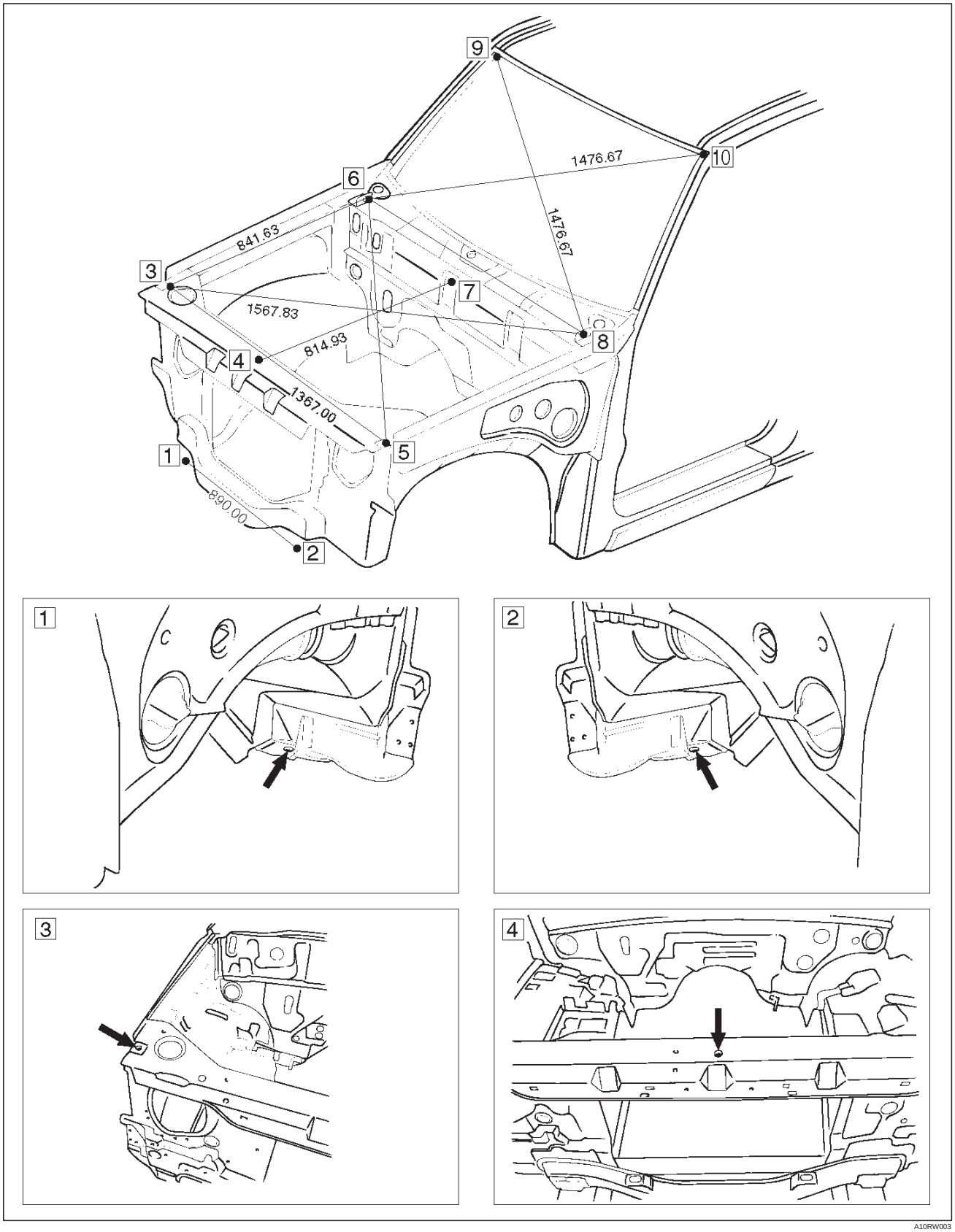

A10RW003

Downloaded from www.Manualslib.com manuals search engine

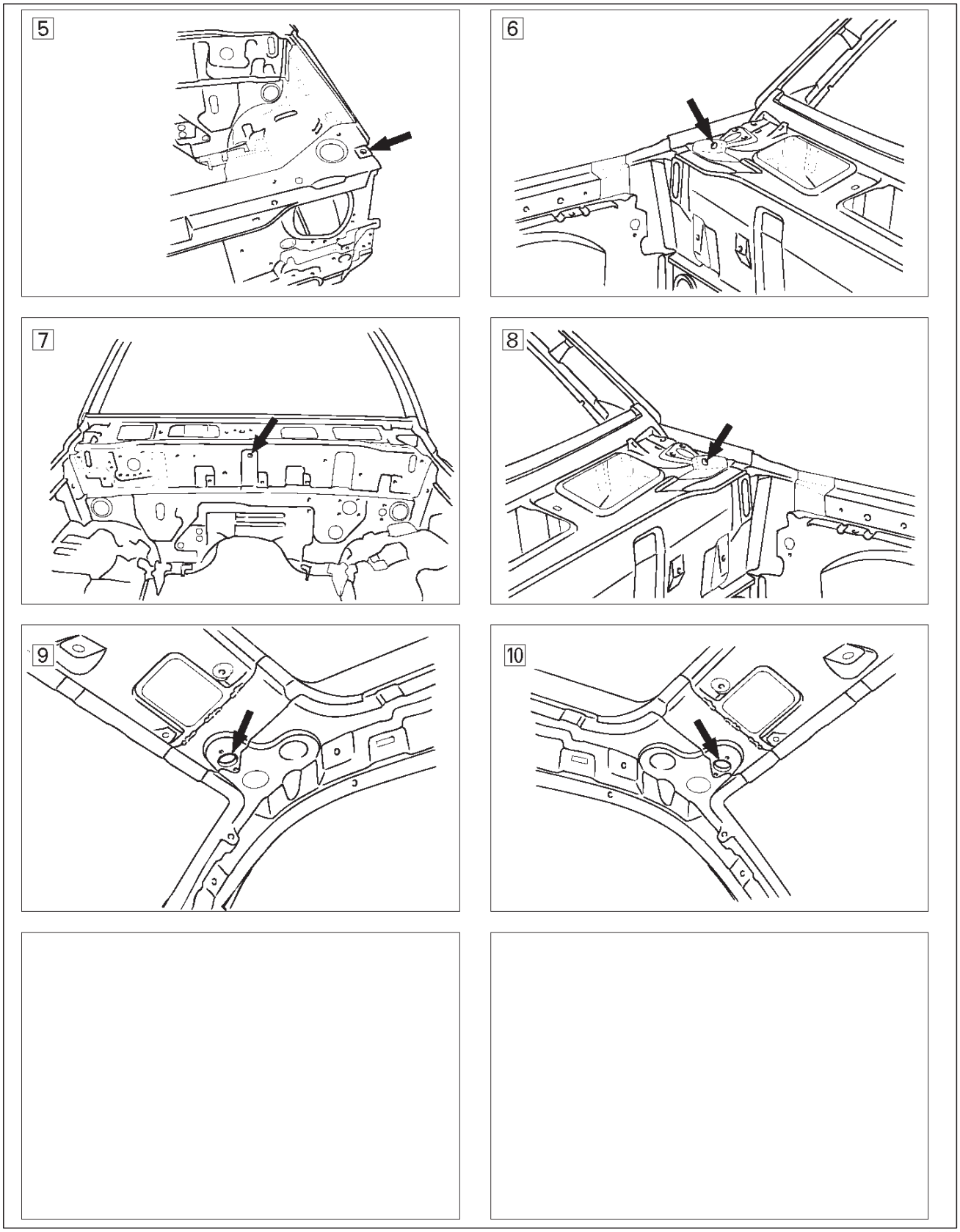

A10RW004

Downloaded from www.Manualslib.com manuals search engine

Room Section

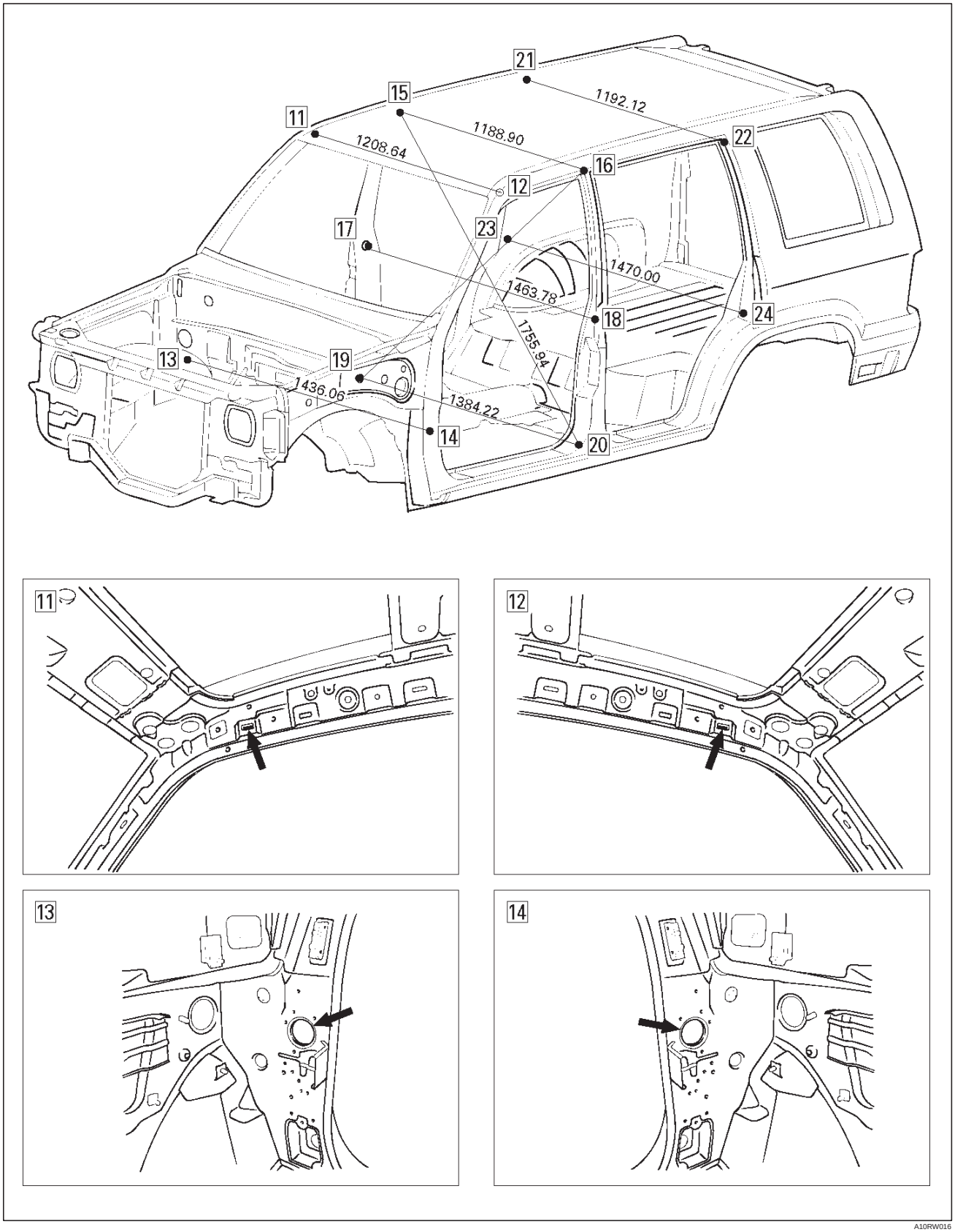

A10RW016

Downloaded from www.Manualslib.com manuals search engine

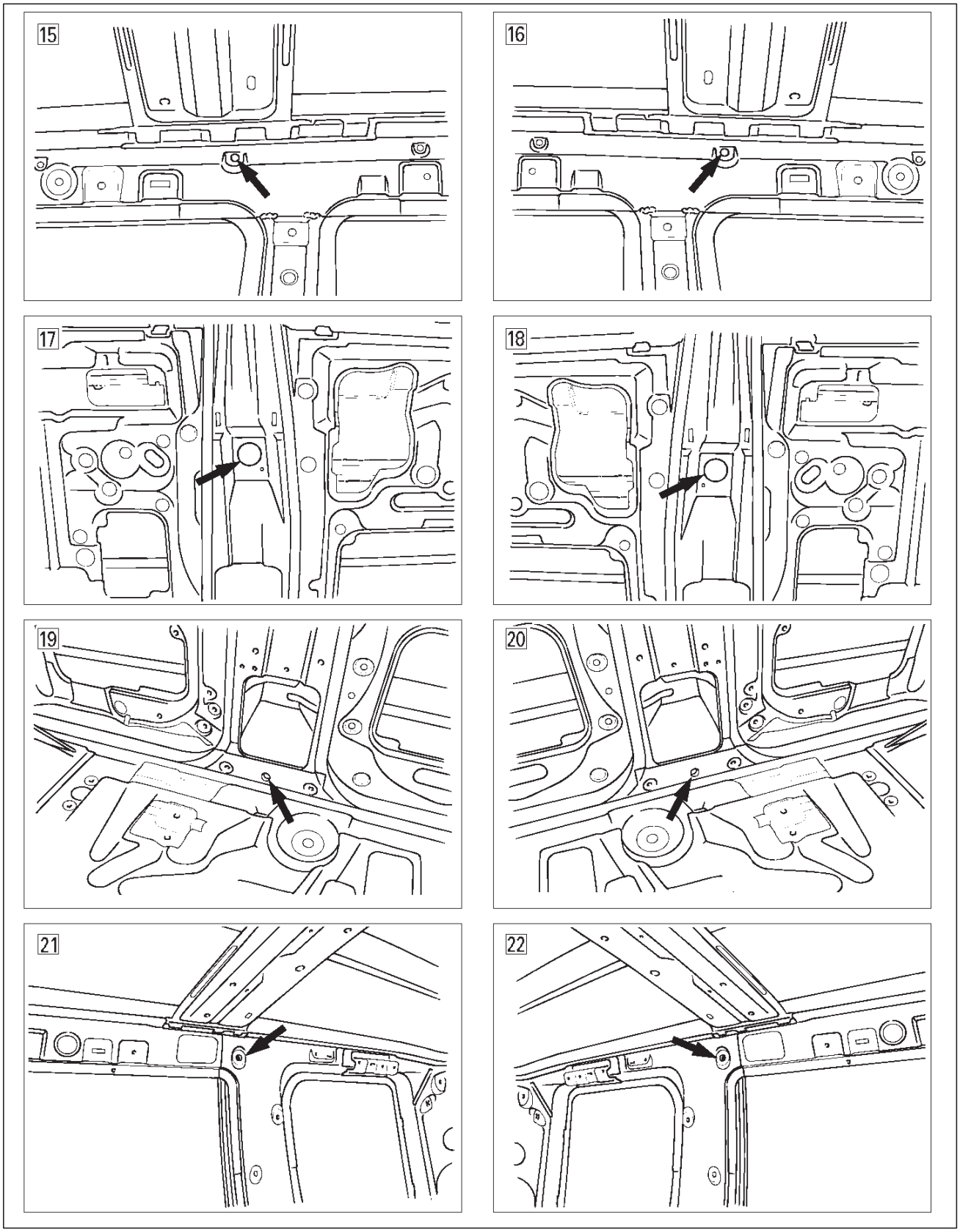

A10RW005

Downloaded from www.Manualslib.com manuals search engine

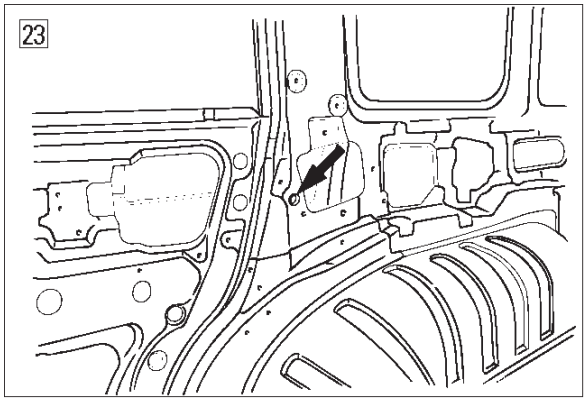

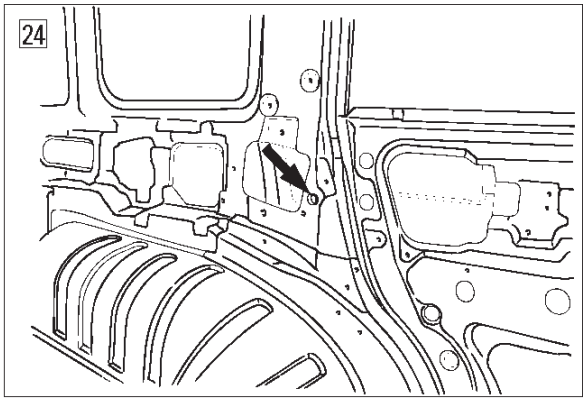

A10RW006

Downloaded from www.Manualslib.com manuals search engine

Rear Section

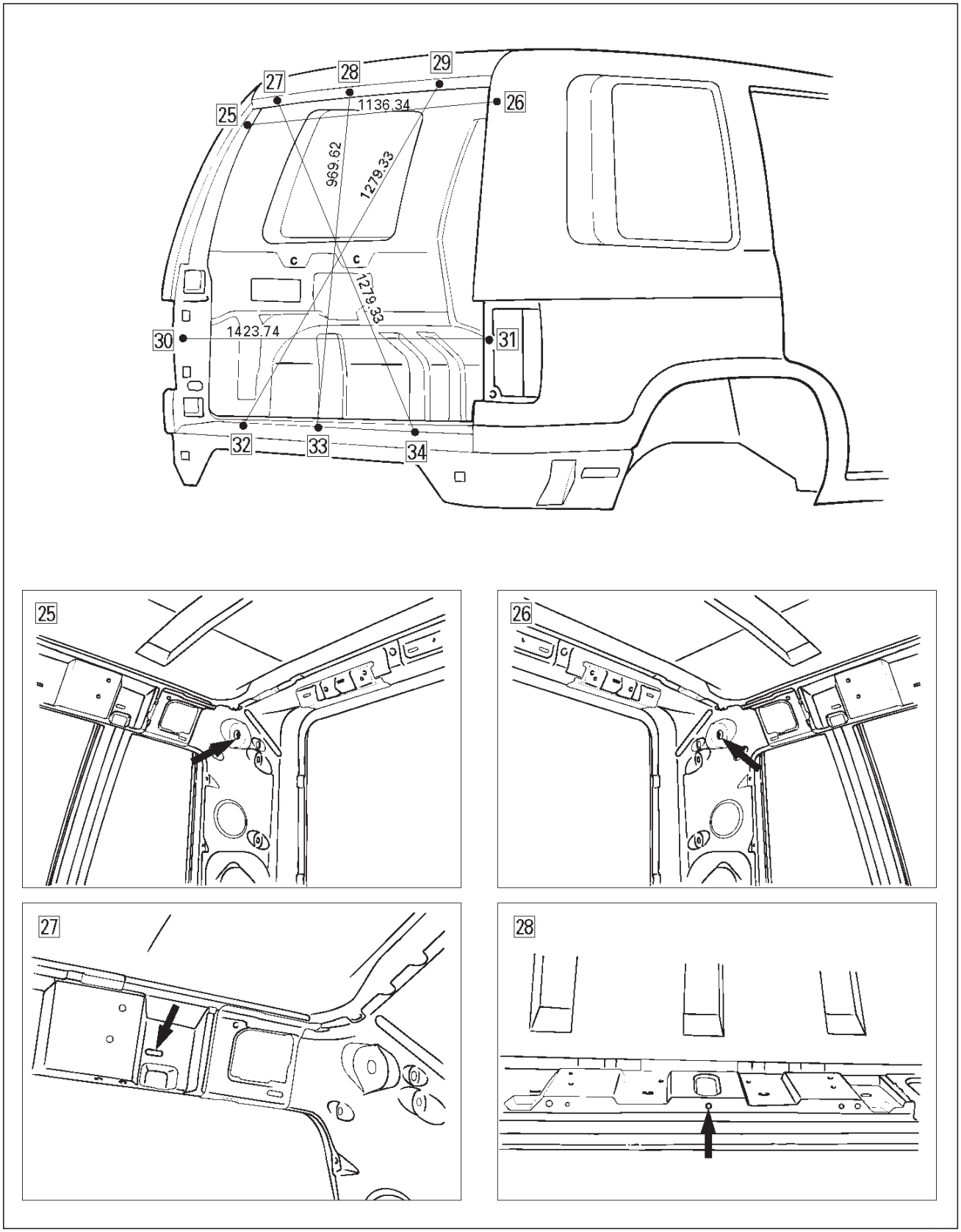

A10RW007

Downloaded from www.Manualslib.com manuals search engine

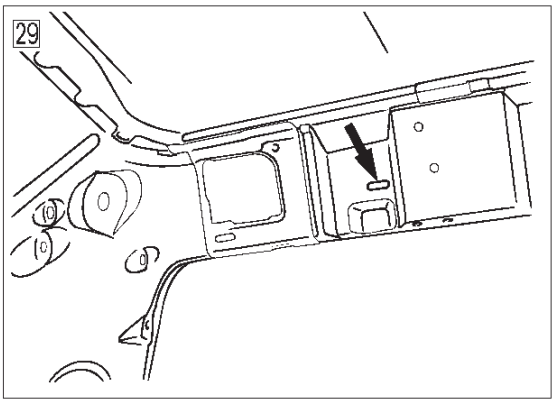

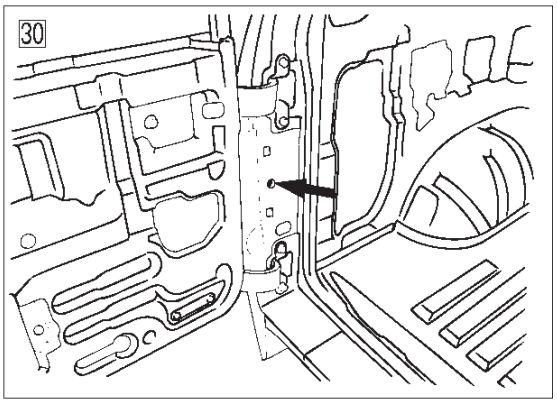

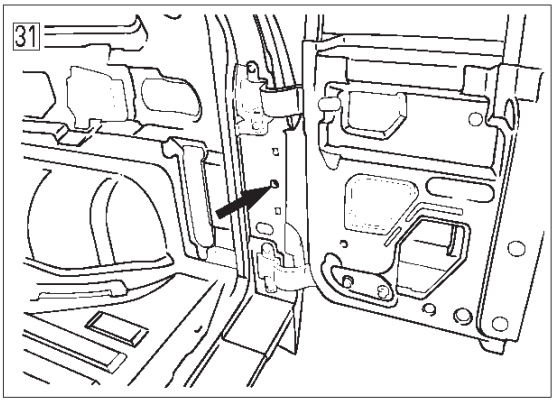

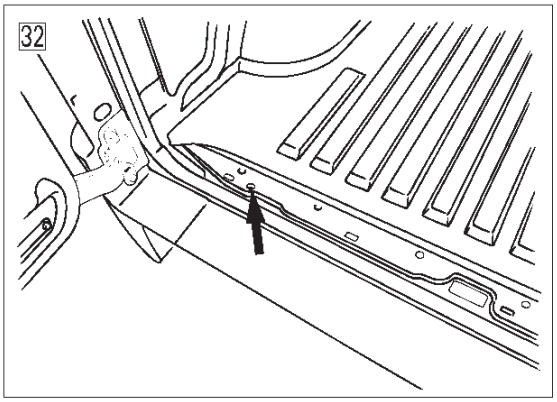

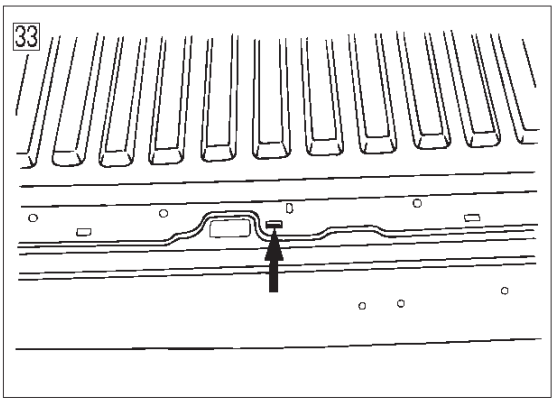

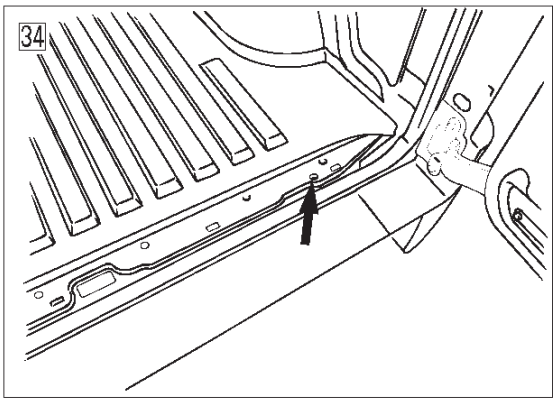

A10RW008

Downloaded from www.Manualslib.com manuals search engine

Side Body

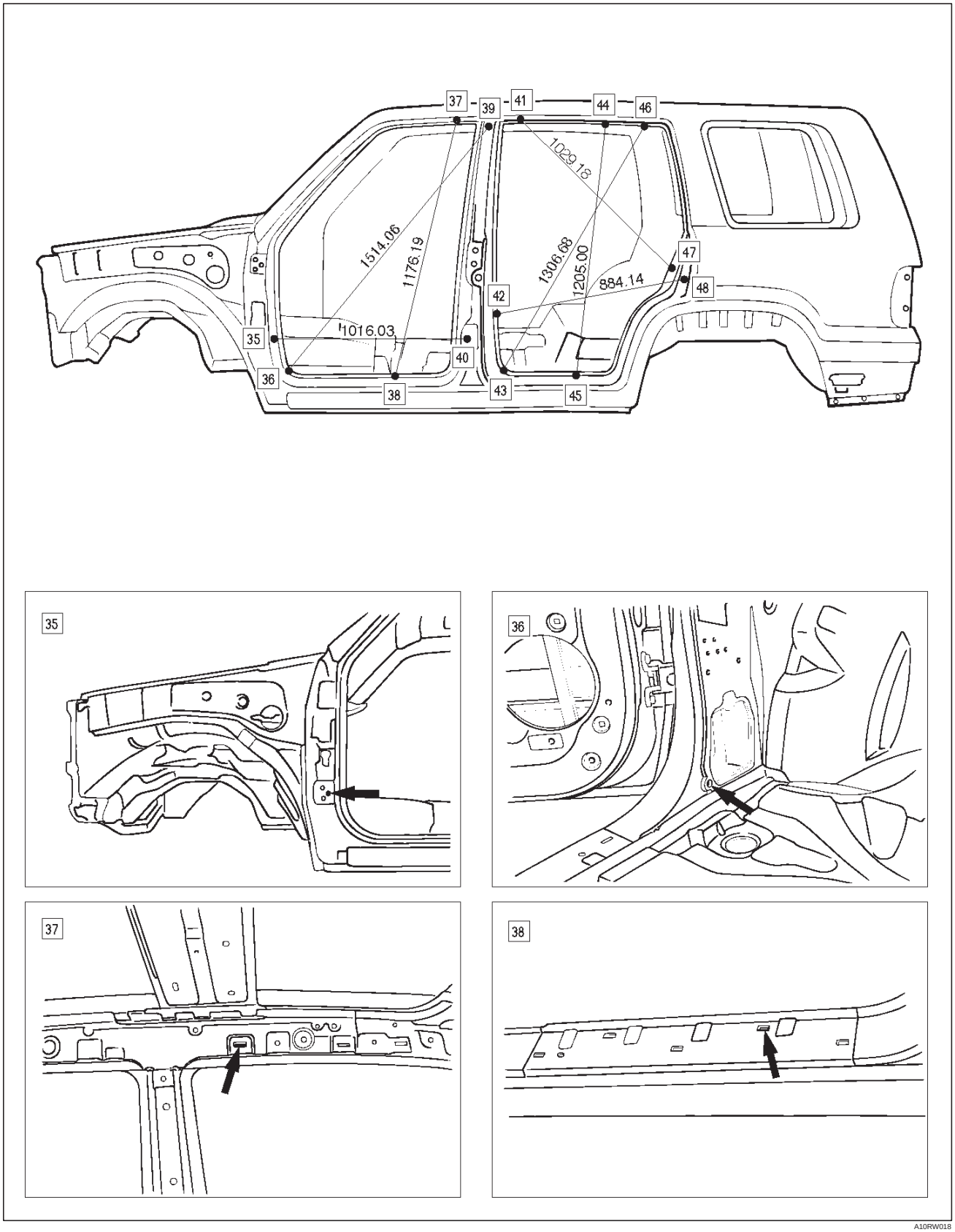

A10RW018

Downloaded from www.Manualslib.com manuals search engine

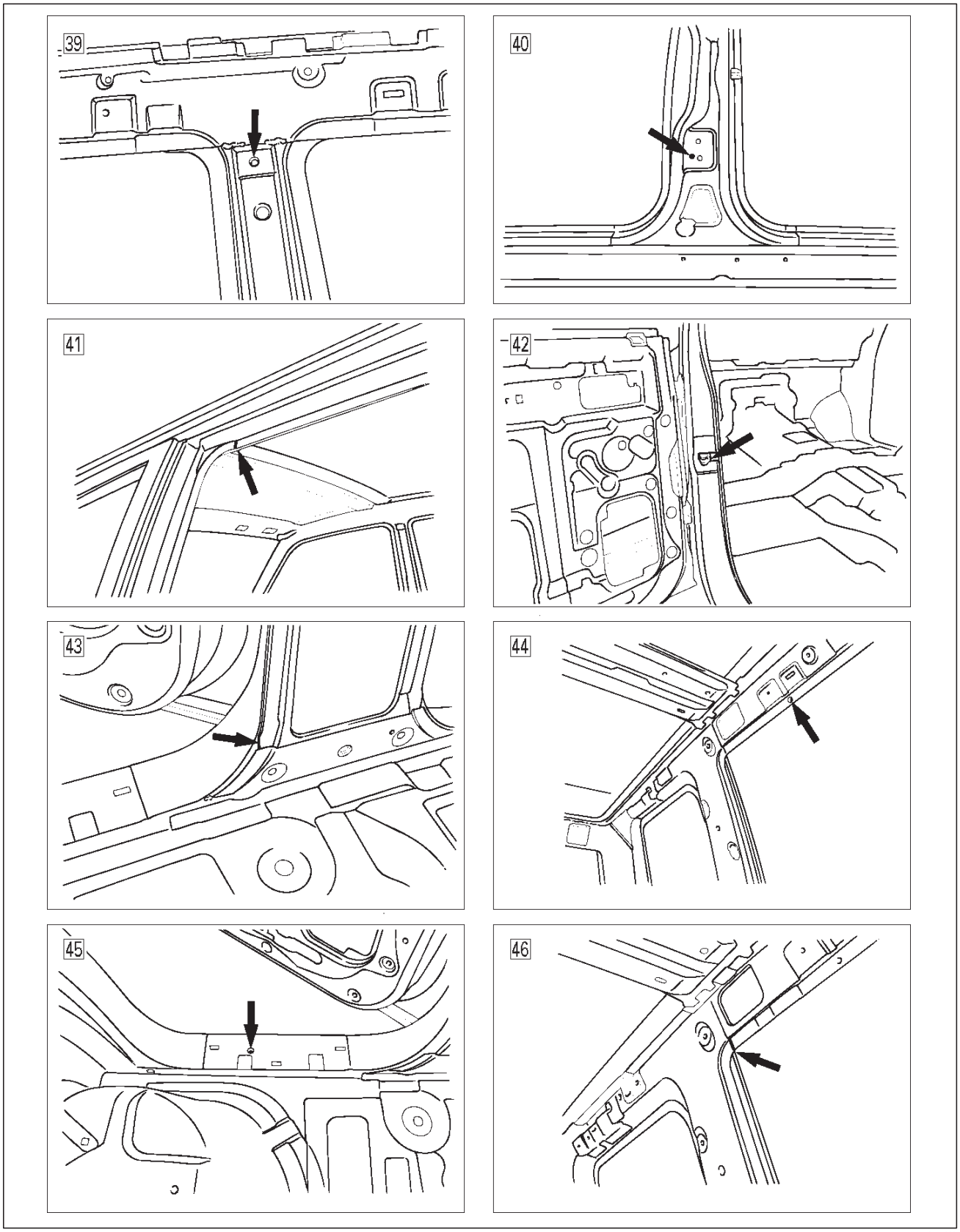

A10RW009

Downloaded from www.Manualslib.com manuals search engine

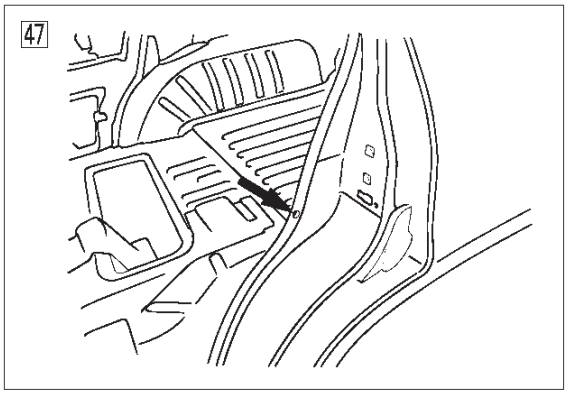

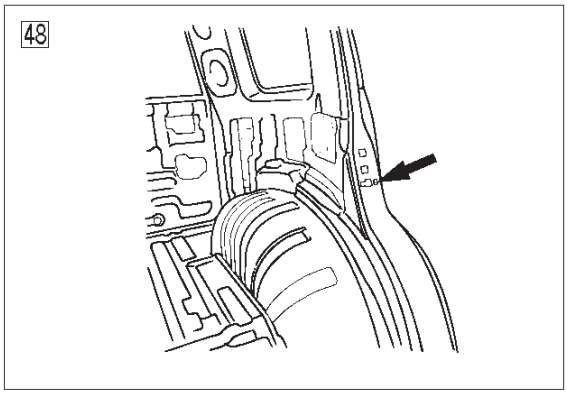

A10RW017

Downloaded from www.Manualslib.com manuals search engine

Window Glass

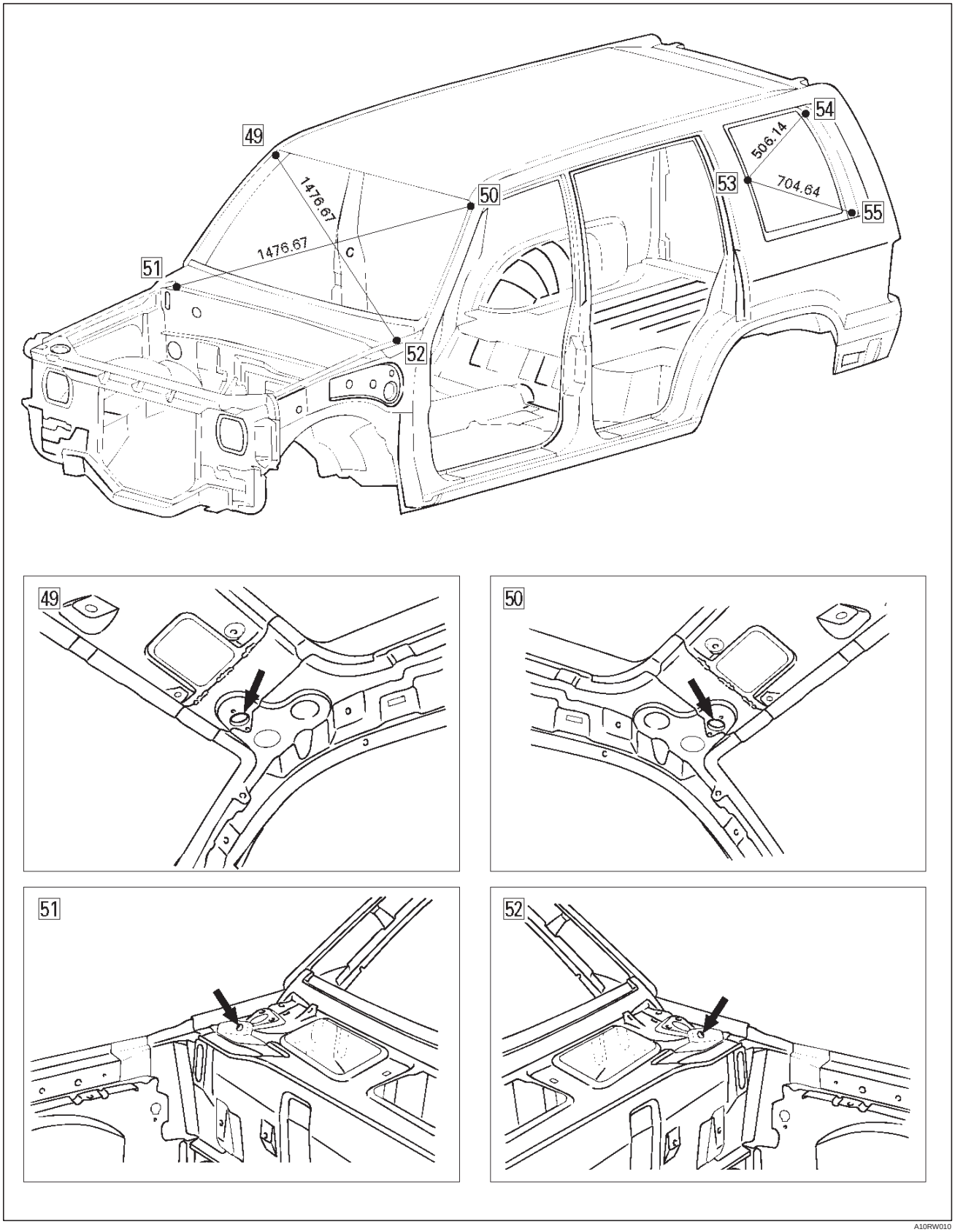

A10RW010

Downloaded from www.Manualslib.com manuals search engine

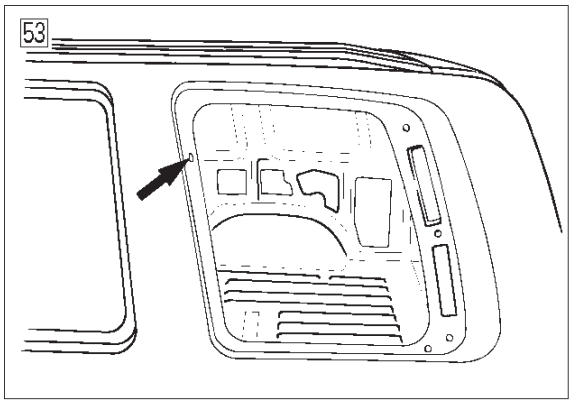

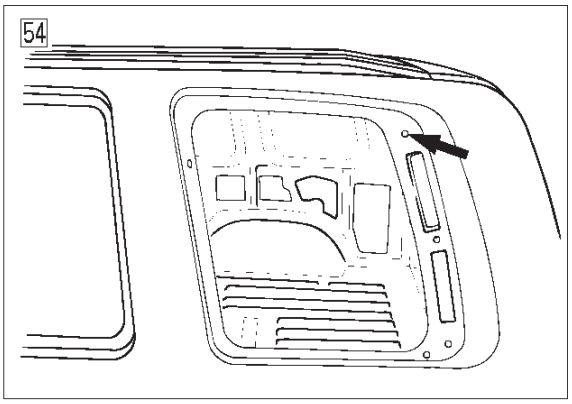

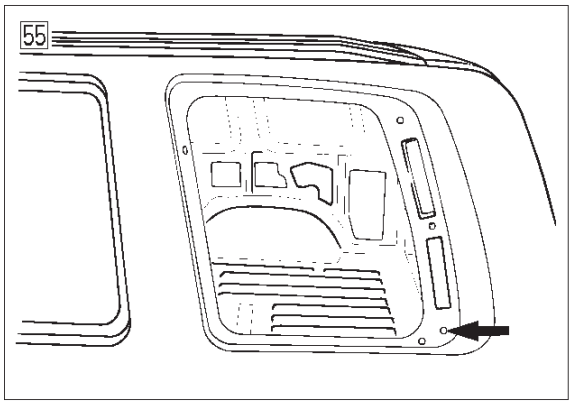

A10RW011

Downloaded from www.Manualslib.com manuals search engine

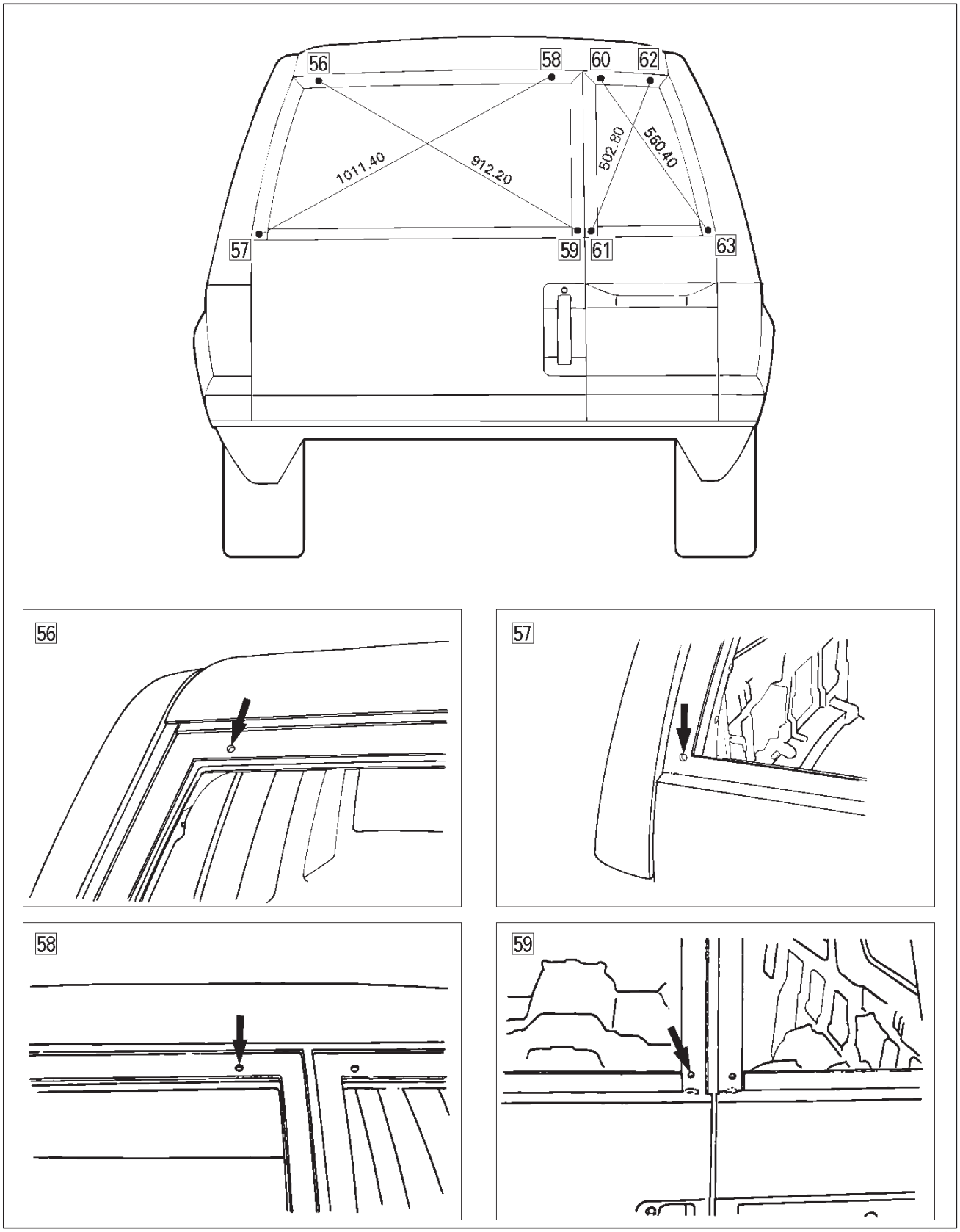

A10RW012

Downloaded from www.Manualslib.com manuals search engine

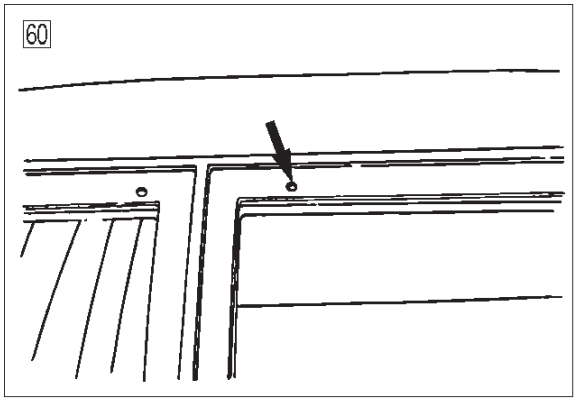

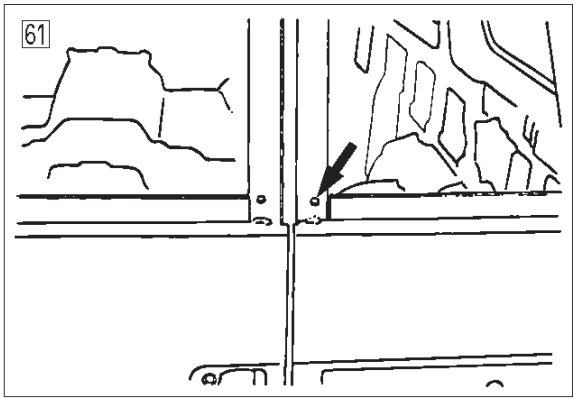

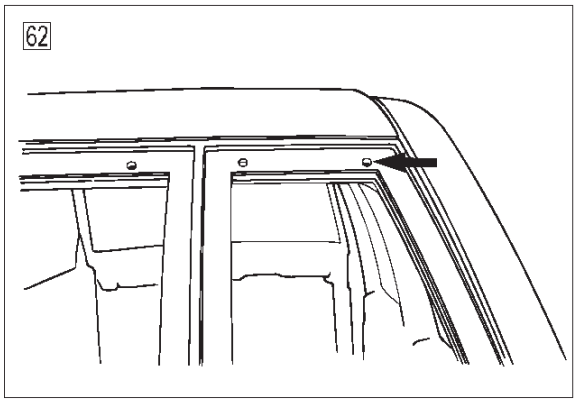

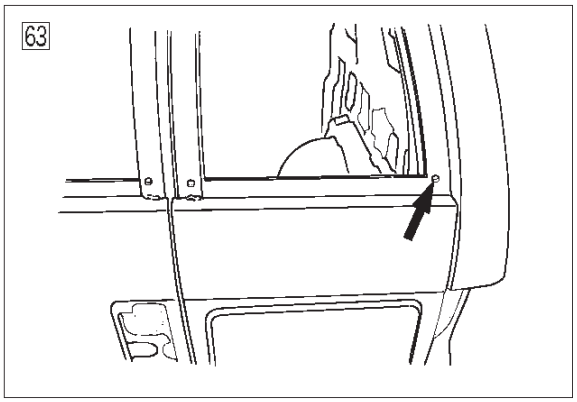

A10RW013

Downloaded from www.Manualslib.com manuals search engine

Instrument Panel Assembly

Parts Location

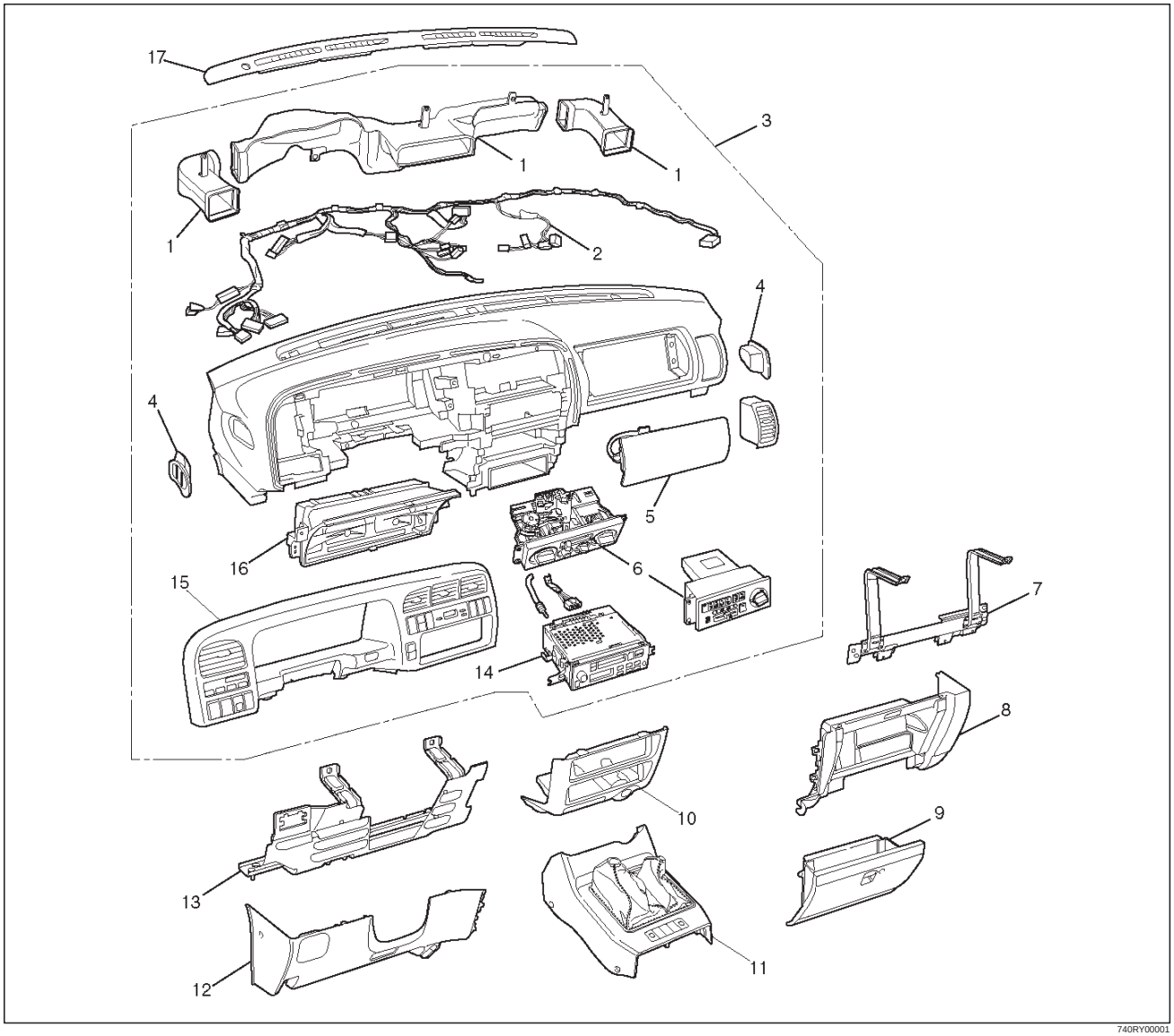

740RY00001

Legend

(1) Vent Duct Assembly
(2) Instrument Harness Assembly
(3) Instrument Panel Assembly
(4) Side Defroster Grille
(5) Passenger Inflator Module
(6) Control Lever Assembly / Control Panel Assembly
(7) Passenger Knee Bolster Reinforcement Assembly
(8) Instrument Panel Passenger Lower Cover Assembly
(9) Glove Box
(10) Lower Cluster Assembly
(11) Front Console Assembly
(12) Instrument Panel Driver Lower Cover Assembly
(13) Driver Knee Bolster Assembly
(14) Radio Assembly
(15) Instrument Panel Cluster Assembly
(16) Meter Assembly
(17) Front Defroster Grille

Removal

CAUTION: For precautions on installation or removal of SRS—air bag system, refer to Supplemental Restraint System (SRS) — AIR BAG in Restraint section.

1. Disconnect the battery ground cable.

Downloaded from www.Manualslib.com manuals search engine

2. Remove front console assembly.
   - Remove the 4 fixing screws and disconnect the switch connectors.
3. Remove lower cluster assembly.
   - Remove the 3 fixing screws (1) in order to disconnect the cigarette lighter (3) and the illumination (2) connectors.

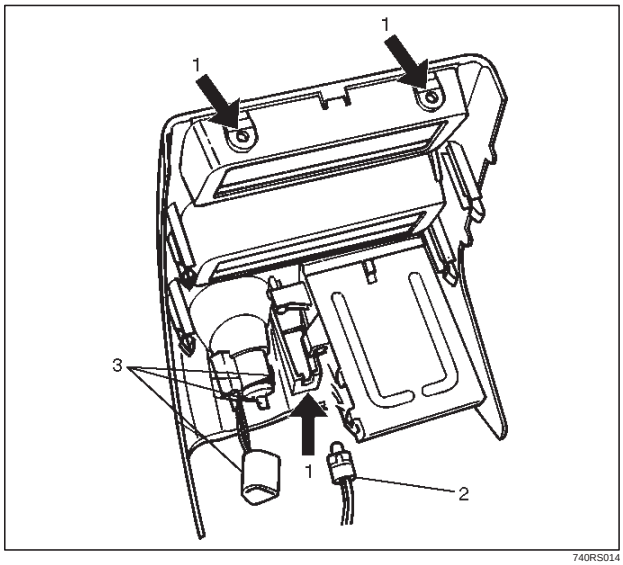

740RS014

4. Remove glove box.
   - Remove the 2 fixing screws.

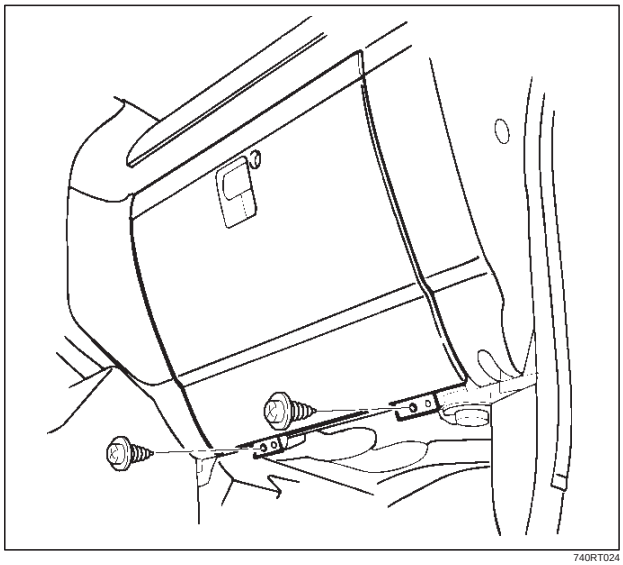

740RT024

5. Remove instrument panel passenger lower cover assembly.
   - Remove the 7 fixing screws (1) and 1 clip (2).

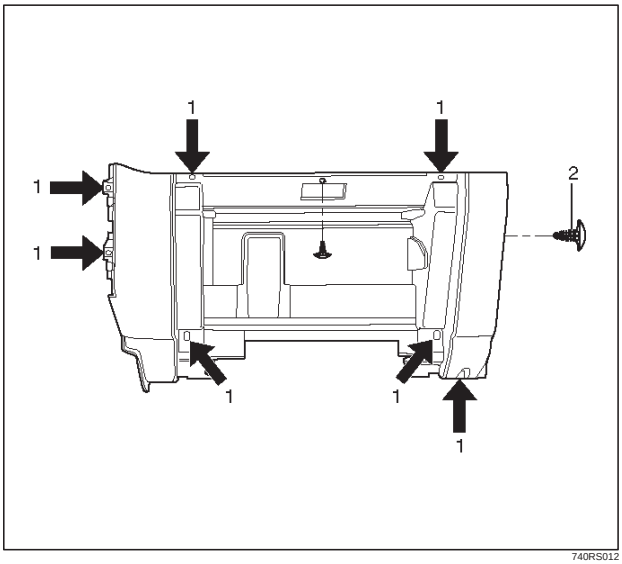

740RS012

6. Remove passenger knee bolster reinforcement assembly.
   - Remove the 4 fixing bolts (2) and 4 nuts (1).

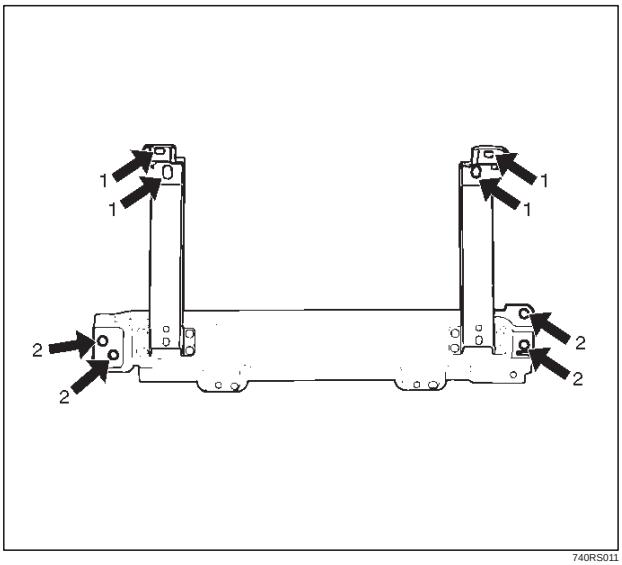

740RS011

Downloaded from www.Manualslib.com manuals search engine

7. Remove instrument panel driver lower cover assembly.
   - Remove the engine hood opener fixing screws.
   - Remove the 2 fixing screws (2), 1 fixing bolt (3), and 1 clip (4). Pull out the fasteners at the 4 positions (1).

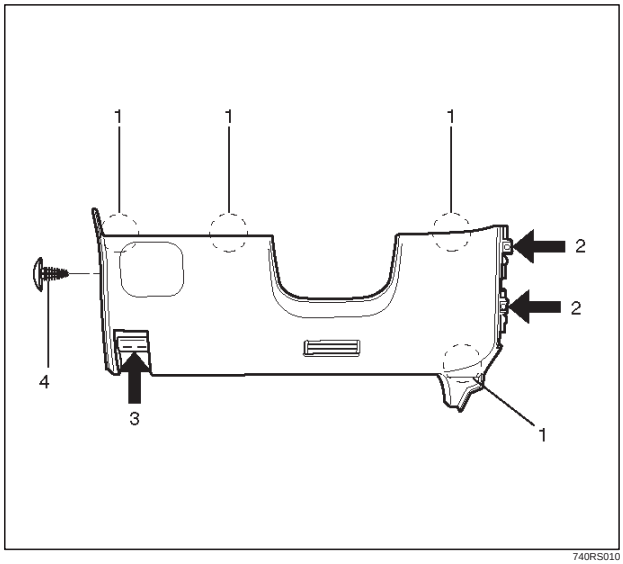

740RS010

8. Remove driver knee bolster assembly.
   - Remove the 6 fixing nuts.

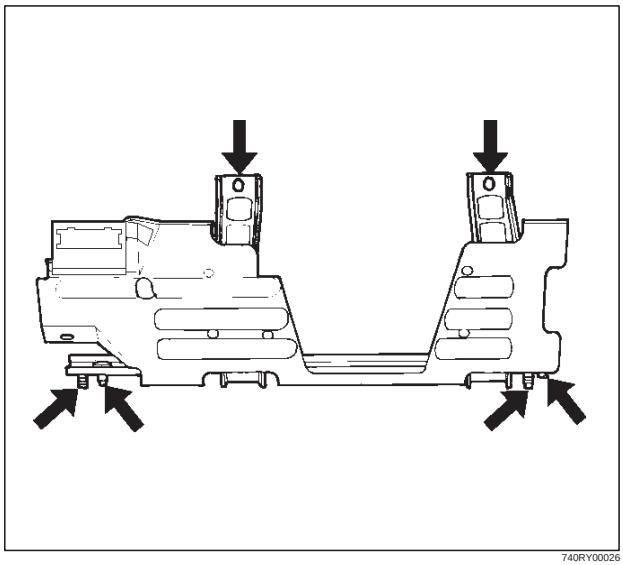

740RY00026

9. Remove front defroster grille.
   - Pry 8 claws on the front side toward you side (room side) and raise the grille upward.
10. Remove instrument panel assembly.
   - Remove the 2 fixing bolts on the SRS adjust bracket and the cross beam under the passenger inflator module.

CAUTION: For precautions on installation or removal of SRS — air bag system, refer to Supplemental RestraintSystem (SRS) — AIR BAG in Restraint section.

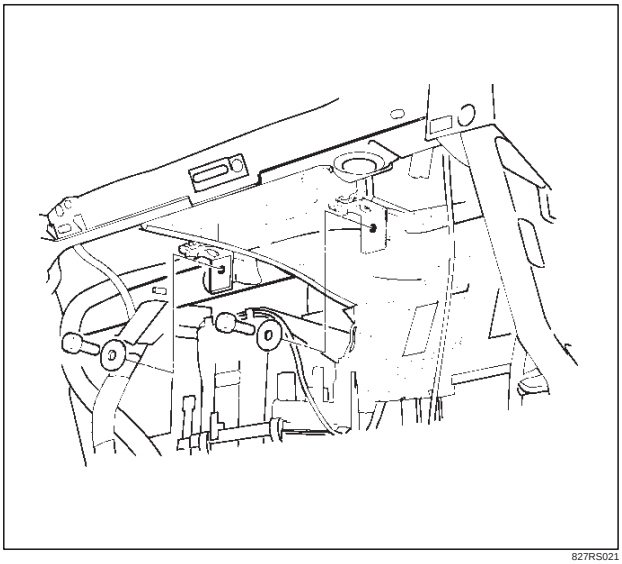

827RS021

- Disconnect the 3 air conditioner control cables on the unit side.
- Remove the instrument harness connectors (5 connectors on the drivers side and 3 connectors on the passenger side), the passenger inflator module connector, the radio antenna cable plug, and the ground cable fixing bolt on the center bracket.
- Remove the 4 bolts (4) and the 2 nuts (3) under the instrument panel assembly, and the upper left and the upper right bolts (2) and the center nut (1).

Downloaded from www.Manualslib.com manuals search engine

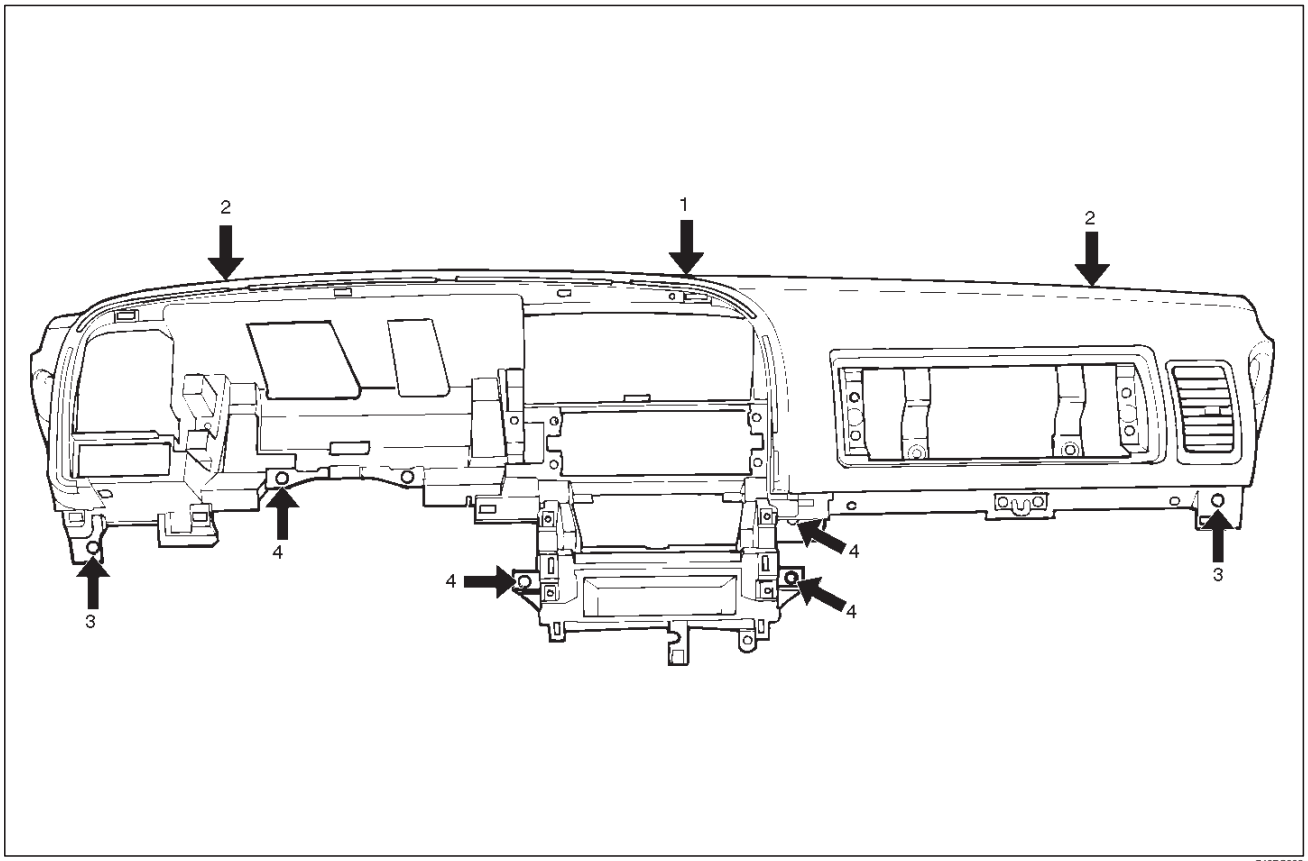

740RS008

11. Remove passenger inflator module.
    - From the back of the instrument panel, remove the 4 fixing nuts (2) on the passenger inflator module (3) and the 2 fixing nuts (1) and washers on the support bracket (4), then disengage the 2 clips in order to remove the passenger inflator module.

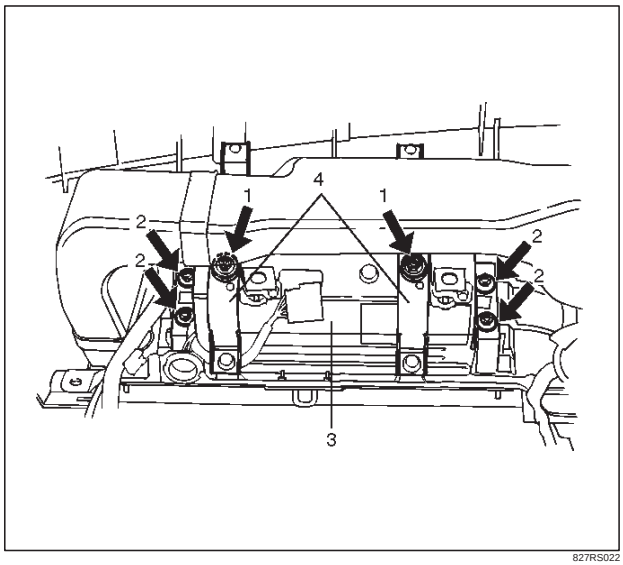

827RS022

12. Remove instrument panel cluster assembly.
    - Remove the 5 fixing screws (2) and pull the main unit toward you and remove the clips at the 4 positions (1). Disconnect the switch connectors.

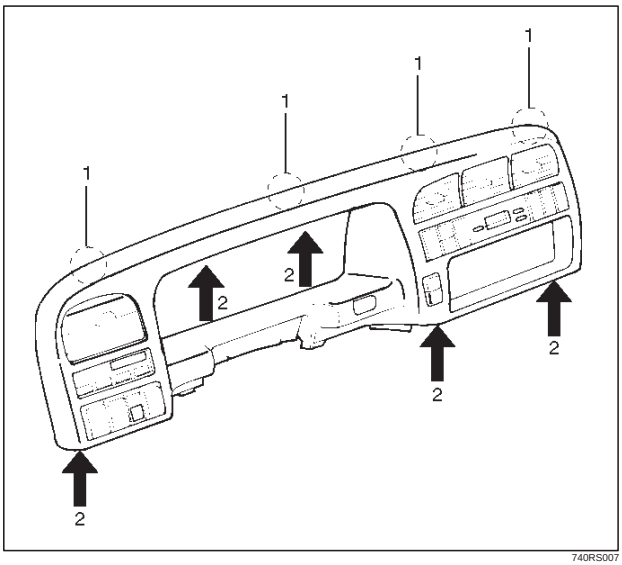

740RS007

Downloaded from www.Manualslib.com manuals search engine

13. Remove meter assembly.
    - Remove the 4 meter assembly fixing screws and disconnect the meter harness connectors.

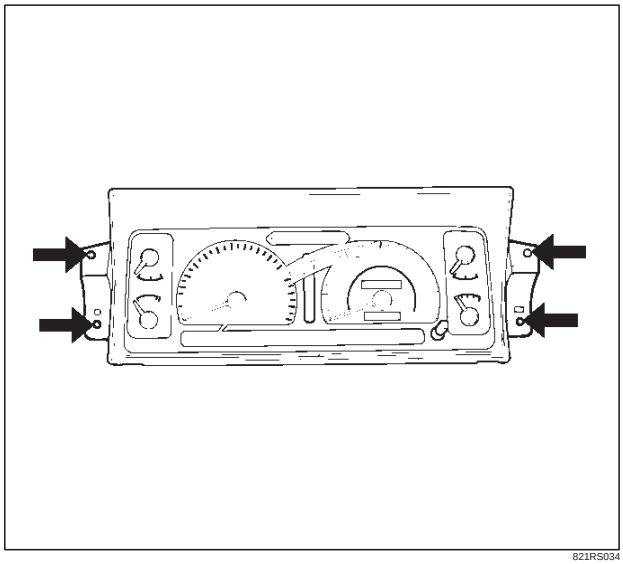

821RS034

14. Remove control lever assembly / control panel assembly.
    - Refer to Control Lever Assembly and / or Control Cable in HVAC section.
15. Remove radio assembly.
    - Remove 2 fixing screws.
16. Remove vent duct assembly.
    - Remove 5 fixing screws.
17. Remove instrument harness assembly.
    - Remove the 4 fixing screws, fasteners at the 4 positions and the clips at the 7 positions.
18. Remove side defroster grille.
    -

NOTE: For the order of removal steps in which each items contained in the instrument panel assembly are removed individually, refer to the chart.

Downloaded from www.Manualslib.com manuals search engine

Installation

To install, follow the removal steps in the reverse order.

Order Of Removal/Installation Steps For Each Item

Removal Item	Removal Procedure	Removal Step
Front console assembly	Shift knob (M/T), Power & Winter SW (A/T), Transfer knob, Seat heater/Miller SW conn. and 4 screws	1, 2
Lower cluster assembly	3 screws, Ciger lighter conn. and Ashtray illumination conn.	1~3
Glove box	2 screws	4
Instrument panel passenger lower cover	7 screws and 1 clip	1~5
Passenger knee bolster reinforcement	4 nuts and 4 bolts	1~6
Instrument panel driver lower cover	Engine hood opening fixing screw, 2 screws, 1 bolt, 1 clip and fasteners at 4 positions	1~3, 7
Driver knee bolster	6 nuts	1~3, 7, 8
Front defroster grille	Claws at 8 positions	9
Instrument panel assembly	2 bolts (SRS adjust bracket~ cross beam), A/C control cable (Unit side at 3 position), Instrument harness connector (Driver side 5 position, assist side 3 position), SRS module conn., Radio antenna jack, Earth cable, 9 bolts and 3 nuts	1~10
Passenger inflator module	4 nuts (SRS module~Instrument panel), 2 nuts 0 and 2 washers (SRS module~support bracket) and 2 clips	1~6, 11
Instrument panel cluster	5 Screws, fastener at 4 position and each SW conn.	1~3, 7, 12
Meter assembly	4 screws and connectors	1~3, 7, 12, 13
A/C control panel assembly	4 screws and connectors	1~3, 7, 12, 14
Radio assembly	2 screws	1~3, 15
Vent duct assembly	5 screws	1~10, 16
Instrument harness assembly	4 screws, fasteners at 4 position, and clips at 7 position	1~10, 17
Side defroster grille		18

M/T = Manual Transmission
A/T = Automatic Transmission
SRS = Supplemental Restraint System
A/C = Air Conditioning

Downloaded from www.Manualslib.com manuals search engine

Cross Beam Assembly

Parts Location

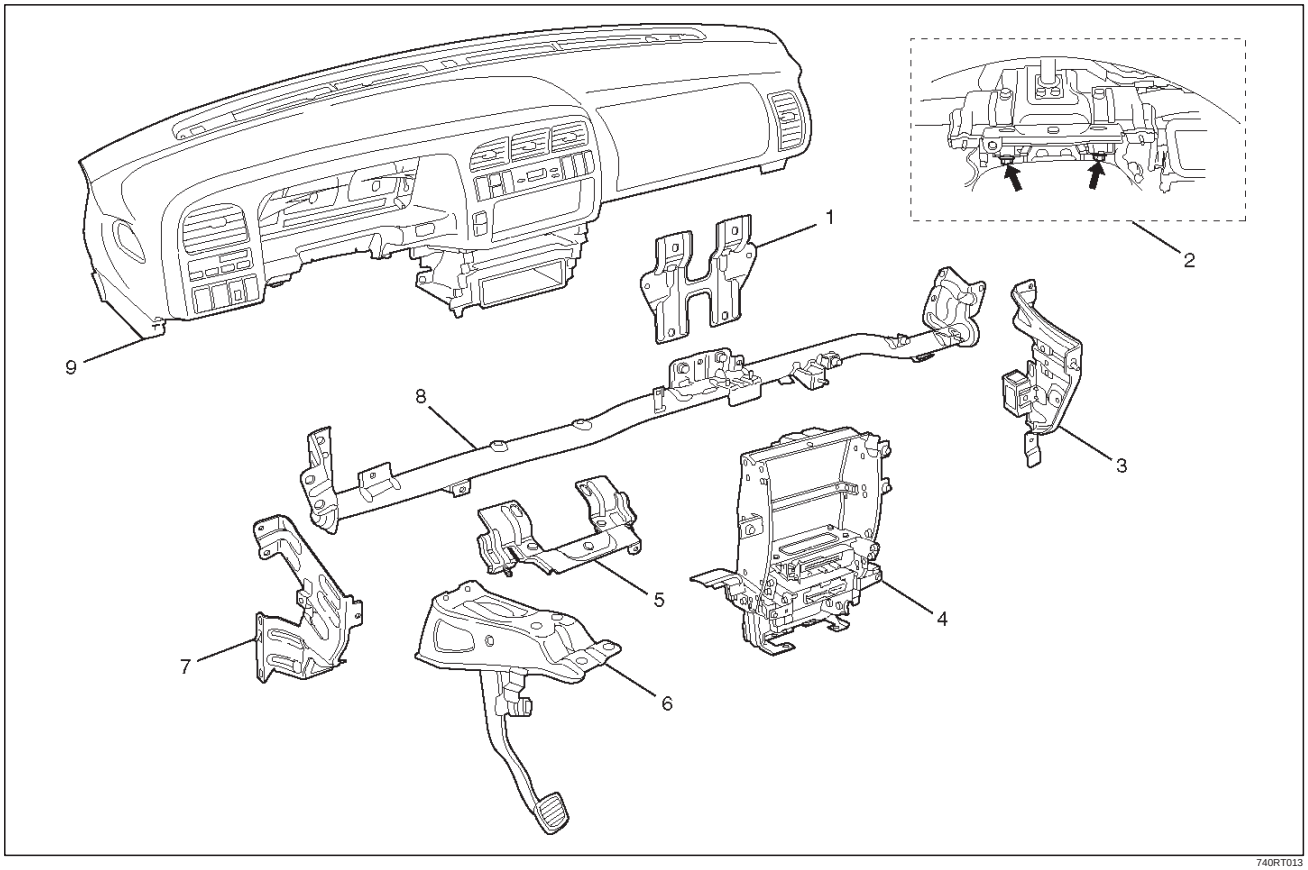

740RT013

Legend

(1) Cross Beam Center Bracket
(2) Steering Column Fixing Bolts
(3) Side Support Bracket Assembly (RH)
(4) Instrument Panel Center Bracket
(5) Steering Support Bracket Assembly
(6) Brake Pedal Mounting Bracket Assembly
(7) Side Support Bracket Assembly (LH)
(8) Cross Beam Assembly
(9) Instrument Panel Assembly

Removal

1. Disconnect battery ground cable.
2. Remove instrument panel assembly.
   - Refer to Instrument Panel Assembly in this section.
3. Remove side support bracket assembly (LH/RH).
   - Remove the 4 fixing bolts on both sides.
4. Remove cross beam center bracket
   - Remove 2 fixing nuts.
5. Remove instrument panel center bracket.
   - Disconnect the PCM and EBCM connector.
   - Remove the DERM (SRS) with 3 fixing nuts.

CAUTION: For precautions on installation or removal of SRS — air bag system, refer to Supplemental Restraint System (SRS) — AIR BAG in Restraint section.

- Remove the 2 fixing nuts (upper) and the 4 fixing bolts (lower).

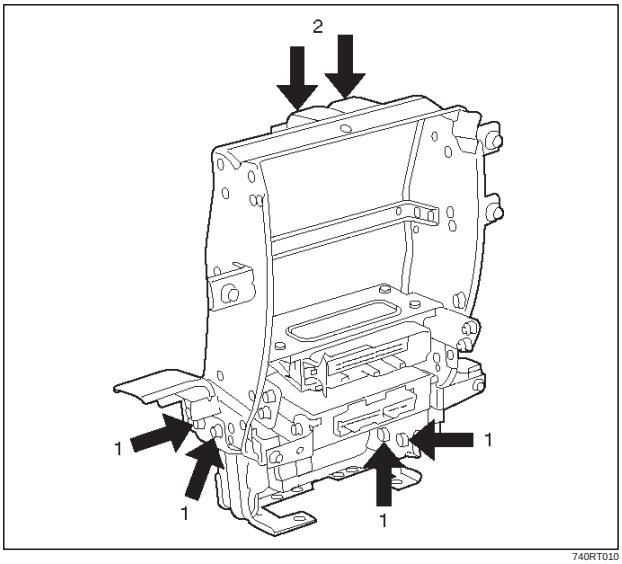

740RT010

Downloaded from www.Manualslib.com manuals search engine

6. Remove steering column fixing bolts.
   - Remove 2 fixing bolts.

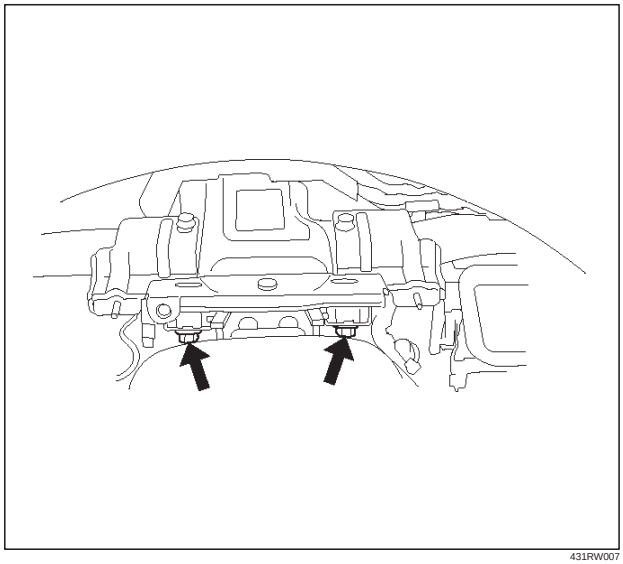

431RW007

7. Remove brake pedal mounting bracket assembly.
   - Disconnect the 2 brake pedal mounting bracket assembly fixing nuts, and remove the antitheft controller.
   - Disconnect the brake pedal link and the brake switch, and remove the 4 fixing bolts and the nuts on the bracket.

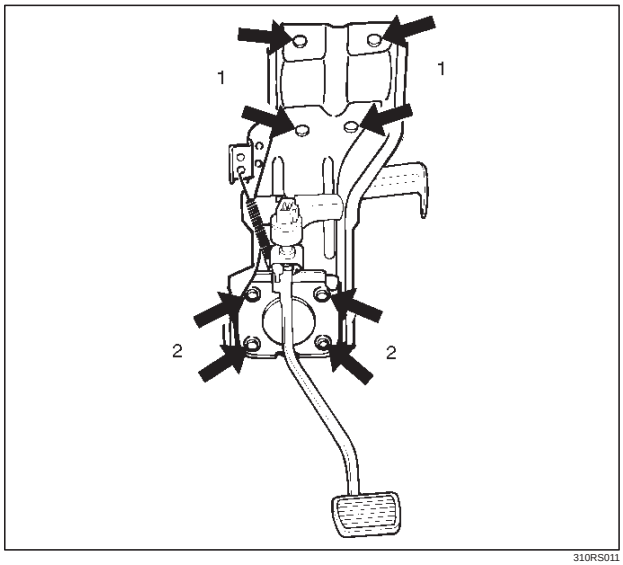

310RS011

8. Remove steering support bracket assembly.
   - Remove the 2 fixing bolts (upper side) (1) and the 3 fixing nuts (lower side) (2).

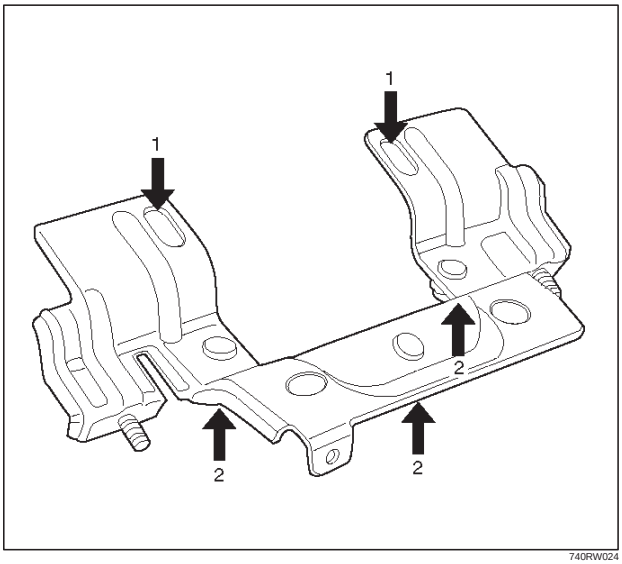

740RW024

9. Remove cross beam assembly.
   - Disconnect the harness clips from the crossbeam assembly, and remove 2 fixing bolts on both sides and 2 fixing nuts in the center.

Installation

To install, follow the removal steps in the reverse order.

Downloaded from www.Manualslib.com manuals search engine

Front Door Assembly

Parts Location

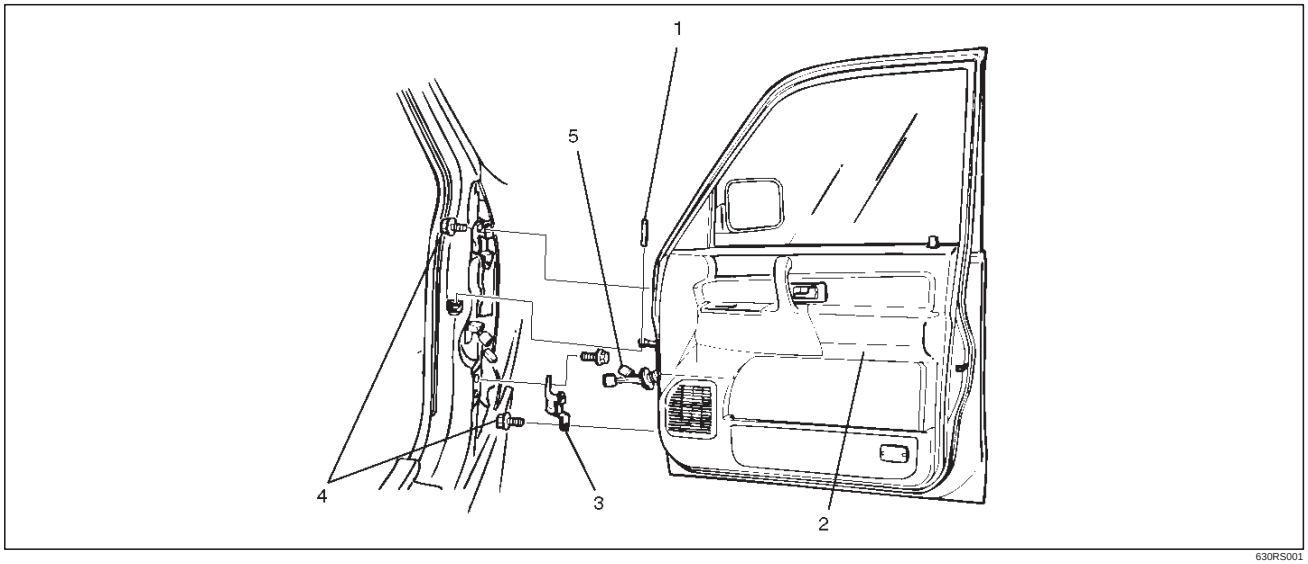

630RS001

Legend

(1) Door Check Arm Pin
(2) Front Door Assembly
(3) Door Hinge Assembly
(4) Hinge Bolt
(5) Door Harness Connection

Removal

1. Disconnect the battery ground cable.
2. Remove door check arm pin (1).

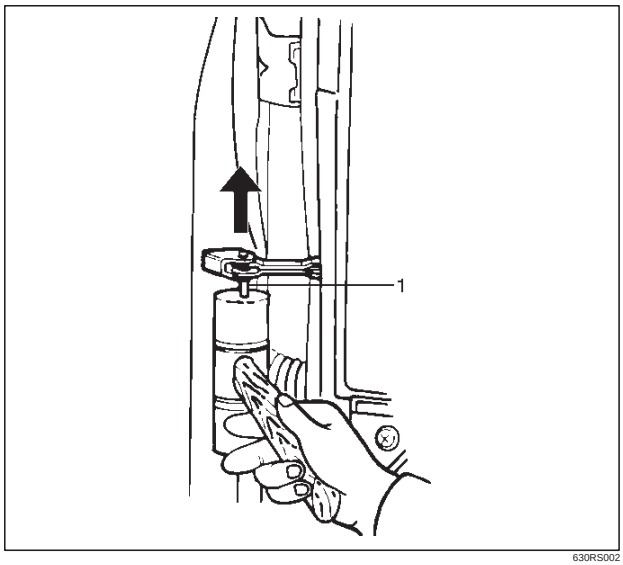

630RS002

3. Remove hinge bolt.
   - Align the hinge bolt to the door side hinge and put a marker on it.
4. Remove door harness connection (2).
   - Pull the door harness grommet out in order to disconnect the harness connection.

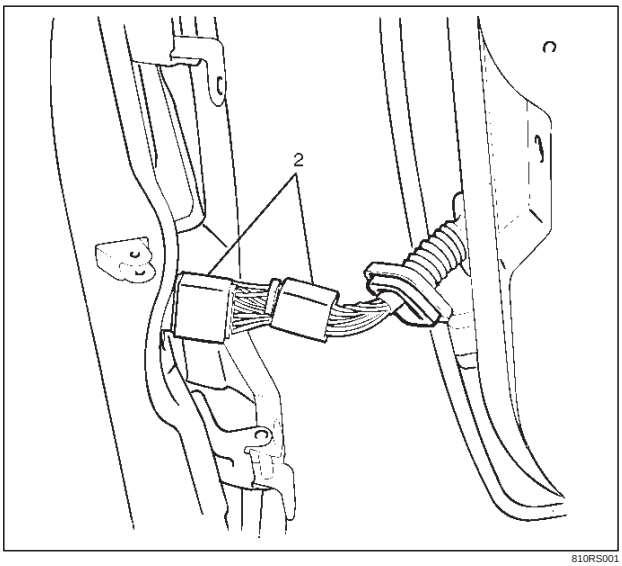

810RS001

5. Remove front door assembly.

Installation

To install, follow the removal steps in the reverse order, noting the following points:

1. Align the door fitting to the body by referring to Body Dimensions in this section.
2. Tighten the door hinge bolts to the specified torque.

   Torque : 34 N•m (25 lb ft)
3. Apply chassis grease to the door check arm pin and the door hinge moving surface.

Downloaded from www.Manualslib.com manuals search engine

Rear Door Assembly

Parts Location

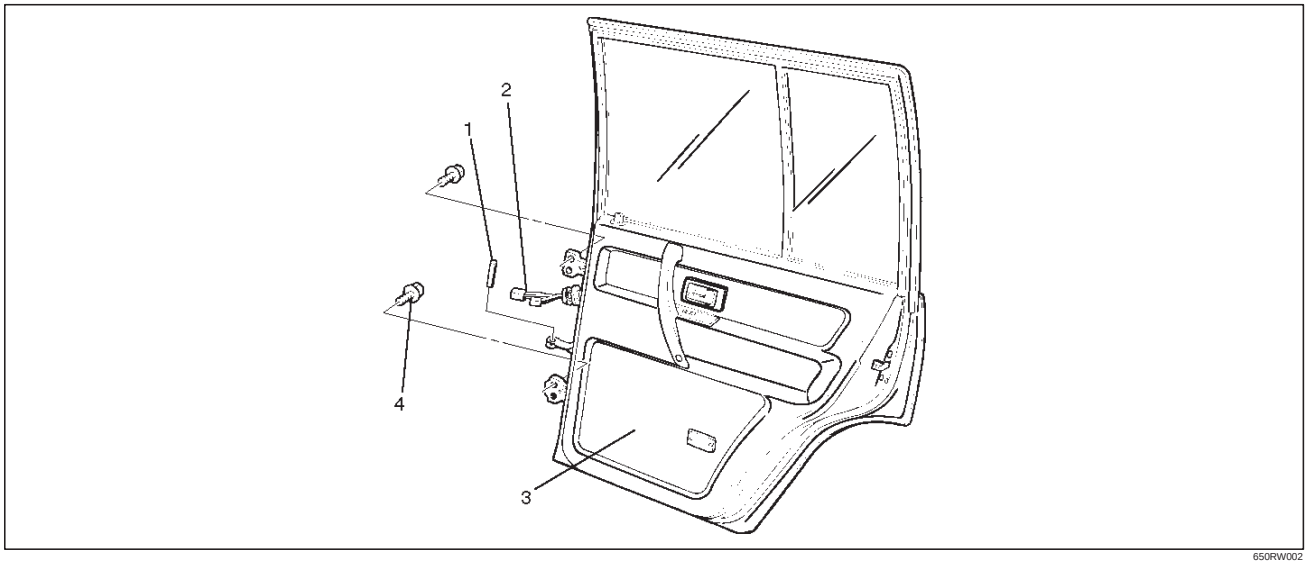

650RW002

Legend

(1) Door Check Arm Pin
(2) Door Harness Connection
(3) Rear Door Assembly
(4) Hinge Bolt

Removal

1. Disconnect the battery ground cable.
2. Apply a setting mark on the body side hinge.
3. Remove door check arm pin (1).

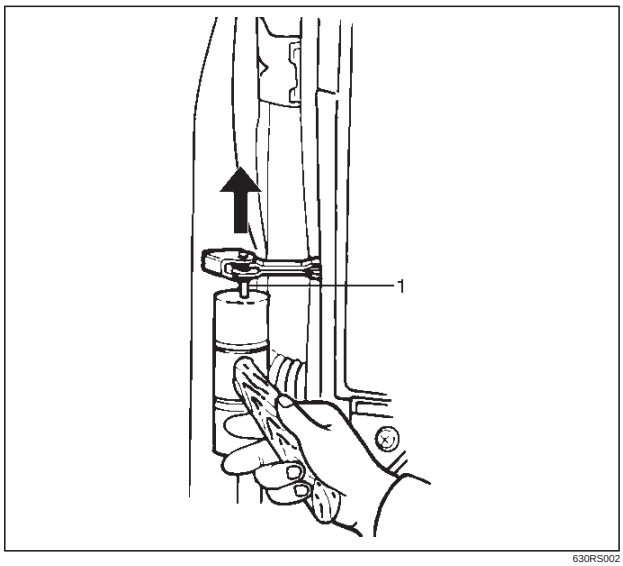

630RS002

4. Remove hinge bolt.
   - Open the front door and remove the body side hinge bolts (2).

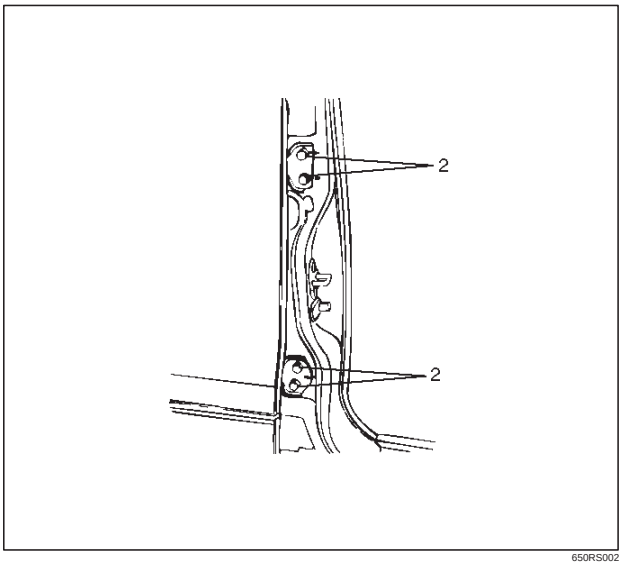

650RS002

Downloaded from www.Manualslib.com manuals search engine

5. Remove door harness connection (3).
   - Pull the door harness grommet out in order to disconnect the door harness connection.

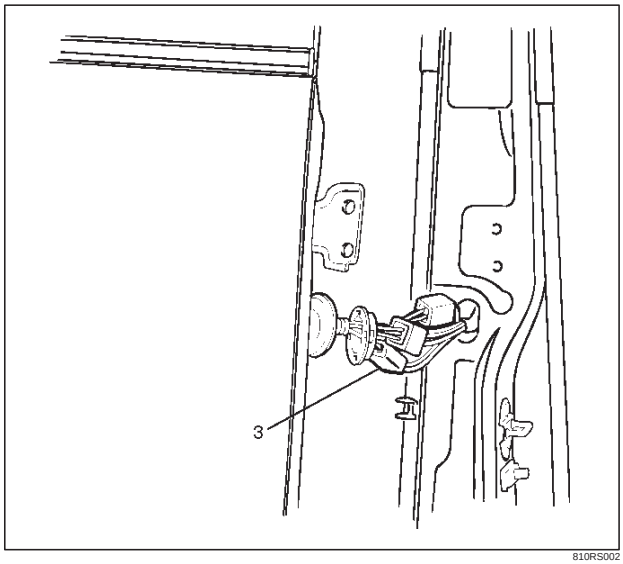

810RS002

6. Remove door assembly

Installation

To install, follow the removal steps in the reverse order, noting the following points.

1. Align the door fitting to the body by refer to Body Dimensions in this section.
2. Tighten the door hinge bolts to the specified torque.

   Torque : 34 N•m (25 lb ft)
3. Apply chassis grease to the check arm pin and the door hinge moving surface.

Door Strikers

Adjustment

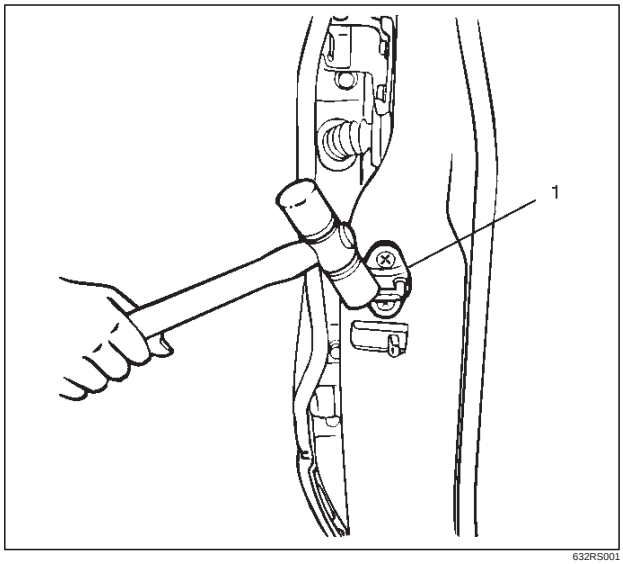

632RS001

1. Loosen the striker (1) screws.
2. Tap with a plastic hammer to align.
3. Tighten the striker screws.

   Torque : 15 N•m (11 lb ft)

Downloaded from www.Manualslib.com manuals search engine

Door Check Arm Assembly (Front & Rear)

Parts Location

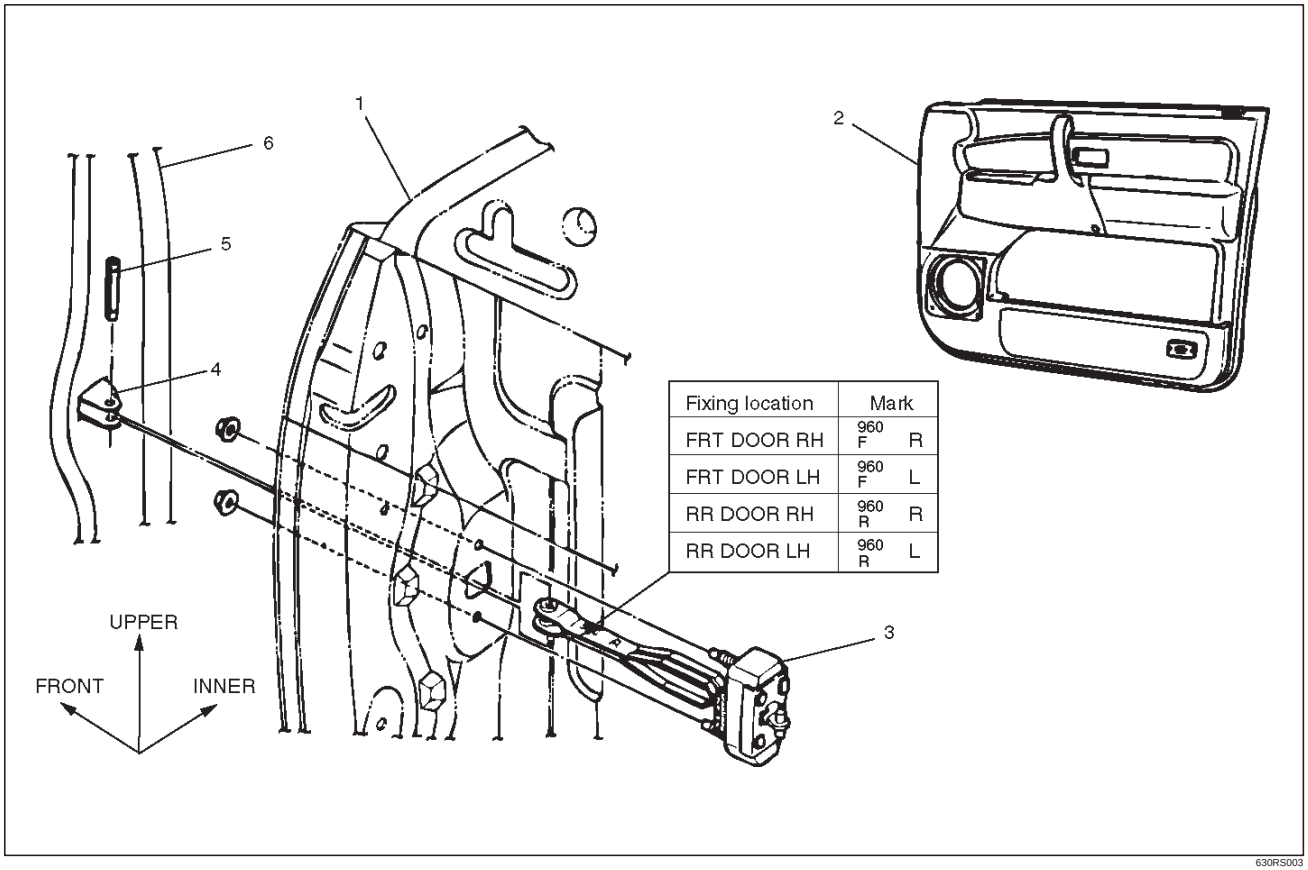

630RS003

Legend

(1) Front or Rear Door
(2) Door Trim Panel
(3) Check Arm Assembly
(4) Check Arm Pin Bracket
(5) Check Arm Pin
(6) Front or Center Pillar

Removal

1. Disconnect the battery ground cable.
2. Remove door trim panel.
   - Refer to Front / Rear Door Trim Panel in Exterior / Interior Trim section.
3. Remove check arm pin (1).

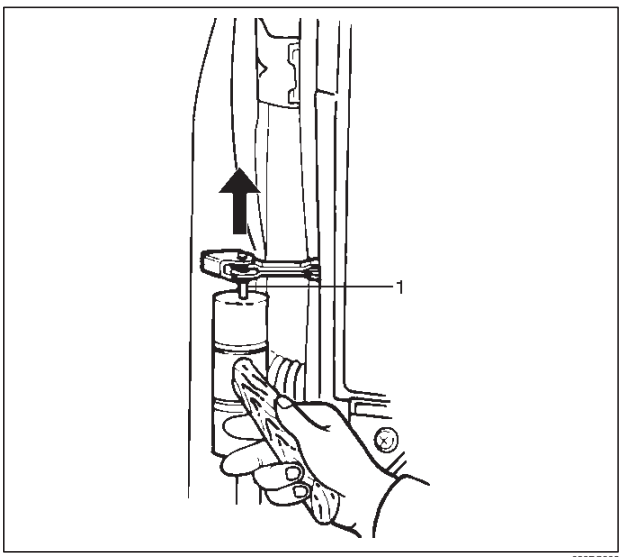

630RS002

Downloaded from www.Manualslib.com manuals search engine

4. Remove check arm assembly.
   - Carefully peel off the water proof sheet as much as necessary, for check arm removal.

Installation

To install, follow the removal steps in the reverse order, noting the following point.

1. When installing the check arm assembly, note its marking to ensure using the appropriate part.
2. Tighten the check arm fixing nuts to the specified torque.

   Torque : 13 N•m (113 lb in)
3. Apply chassis grease to the check arm pin moving surface.

Front Window Regulator, Glass And Glass Run

Parts Location

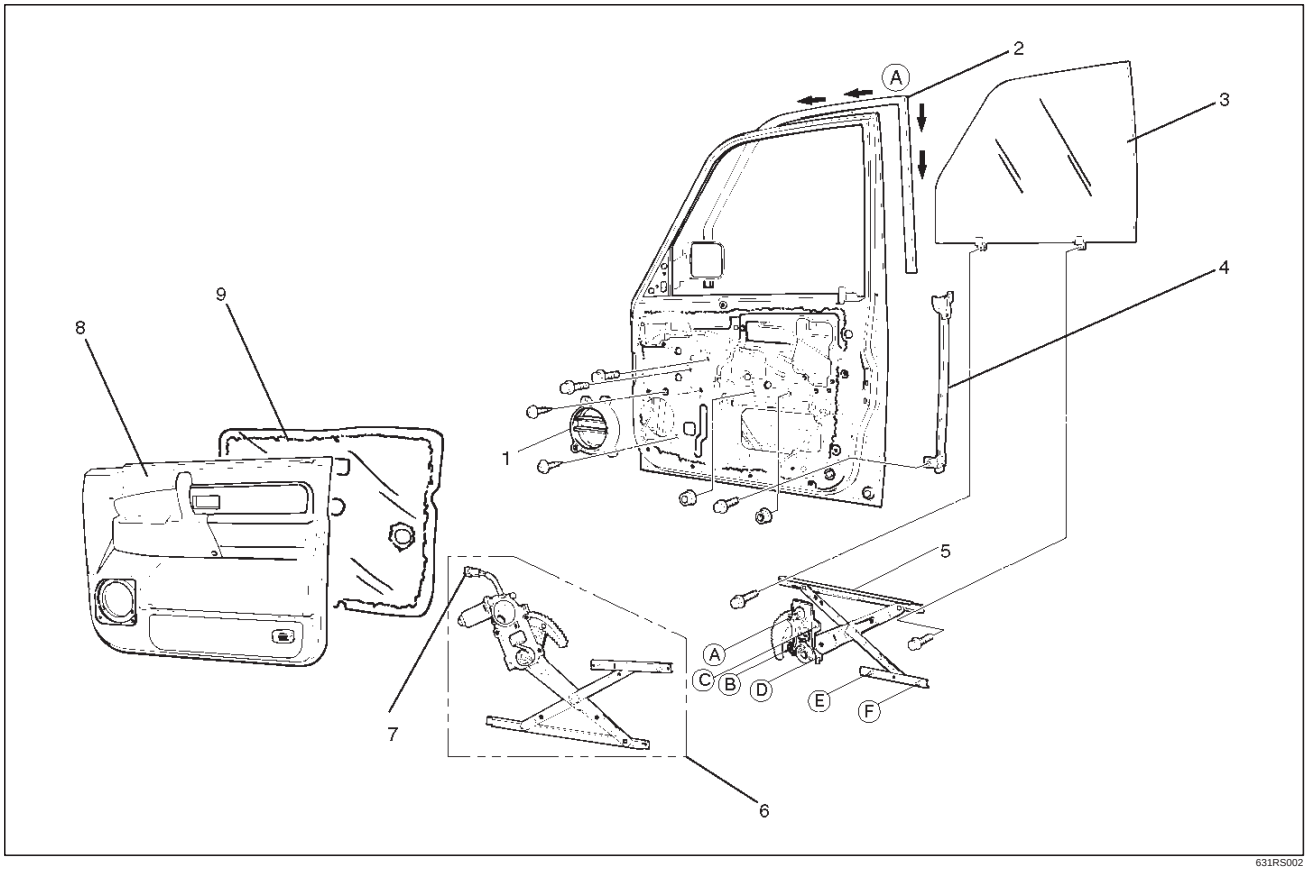

631RS002

Legend

(1) Speaker Box
(2) Glass Run
(3) Glass
(4) Rear Guide Rail
(5) Window Regulator
(6) Window Regulator with Power Window
(7) Window Regulator Motor Connector
(8) Door Trim Panel
(9) Waterproof Sheet

Removal

1. Disconnect the battery ground cable.
2. Remove door trim panel.
   - Refer to Front Door Trim Panel in Exterior / Interior Trim section.
3. Remove speaker box.

Downloaded from www.Manualslib.com manuals search engine

4. Remove waterproof sheet.

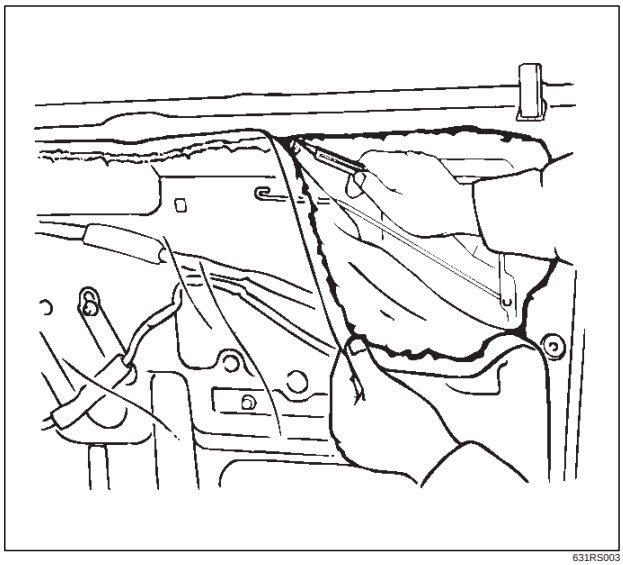

631RS003

- Take notice of the door harness and the grommet, peel the waterproof sheet off the door panel carefully.

5. Remove glass.

- Bring the glass (1) down to the position where the fixing bolts can be seen.

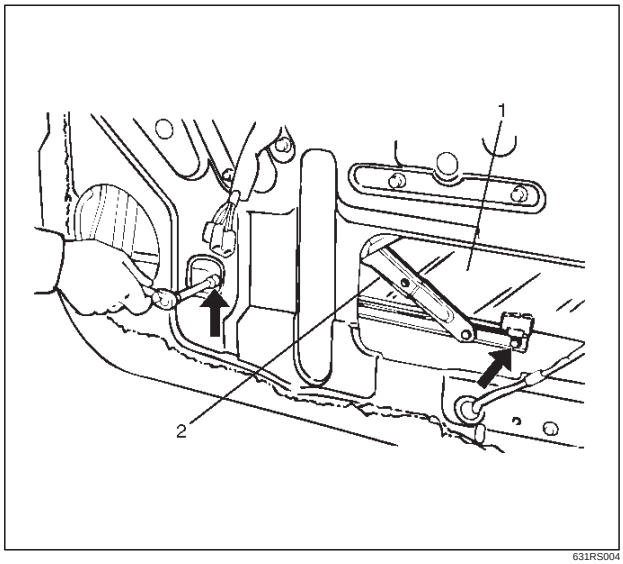

631RS004

- Remove the glass fixing bolts from the window regulator (2) and lower thefront side of the glass.
  When the front side of the glass comes off the glass run (3), turn the glass inside out and pull it up from its rear side.

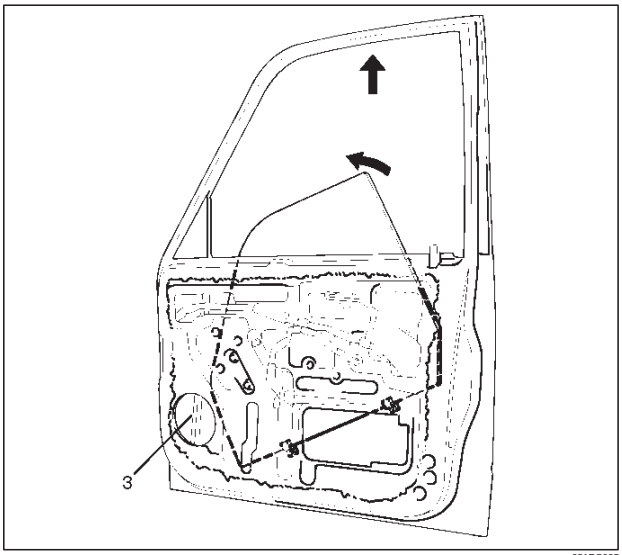

631RS005

6. Remove window regulator.
   - Remove the window regulator fixing bolts (4) and the rear guide rail fixing bolt (5).
   - Disconnect the window regulator motor harness connector, if equipped with power windows.

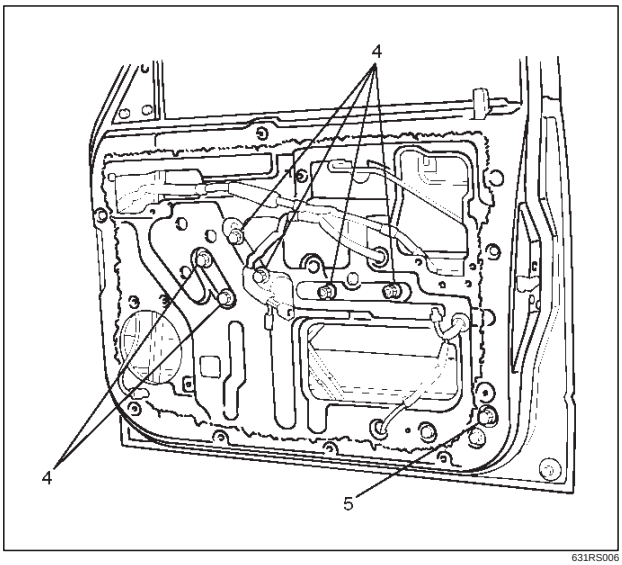

631RS006

Downloaded from www.Manualslib.com manuals search engine

7. Remove glass run.
   - Pull the glass run (6) out from the door frame groove.

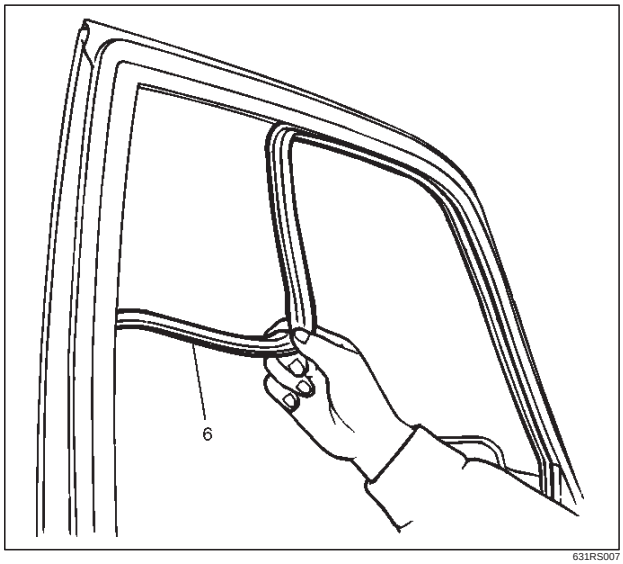

631RS007

8. Remove rear guide rail.

Installation

To install, follow the removal steps in the reverse order, noting the following points.

1. Apply soap and water to the door frame groove. Insert the glass run (1) to the door frame from the A corner in the arrow–marked directions.
   Install the glass run with its wider end pointed to the inside of the vehicle.

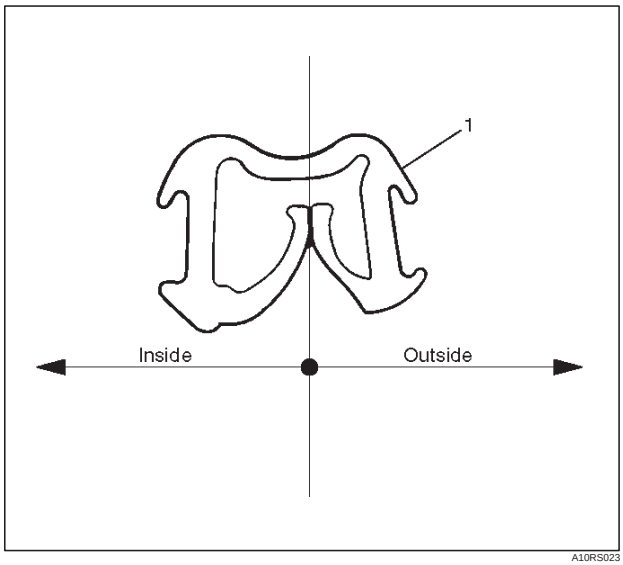

A10RS023

2. Set the glass into the door panel with the front side of the glass lowered and insert the rear side of the glass into the glass run (1). Then insert the front side of the glass into the glass run in order to install the glass to the glass run while raising it up along the glass run.
3. Tighten the window regulator and the glass fixing bolts and nuts to the specified torque.

   Torque : 8 N•m (69 lb in)

4. Check to see of the window regulator operates smoothly and the glass opens and closes properly. Install the waterproof sheet with no clearance between the door panel and the waterproof sheet.

Downloaded from www.Manualslib.com manuals search engine

Rear Window Regulator And Glass

Parts Location

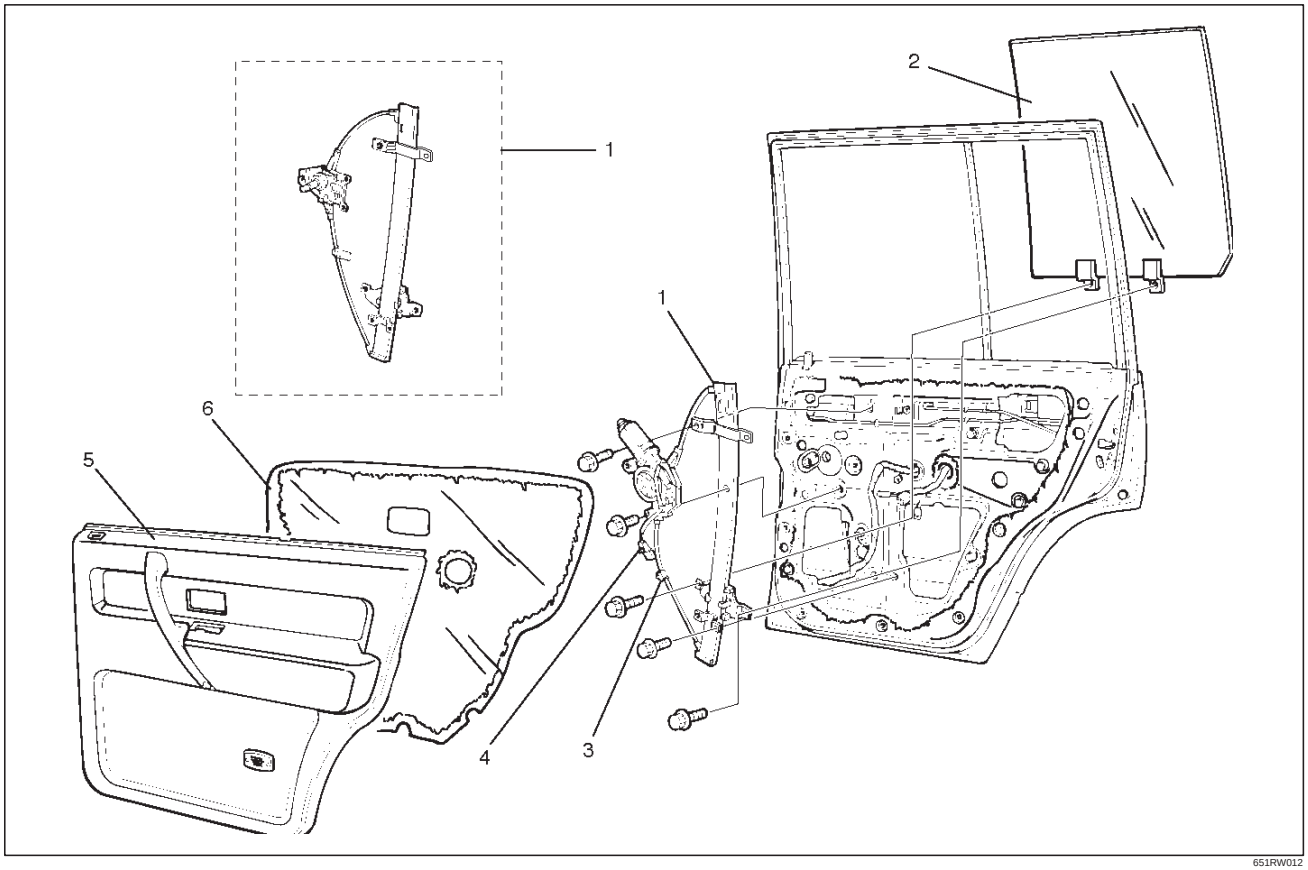

651RW012

Legend

(1) Window Regulator
(2) Glass
(3) Cable Fixing Clip
(4) Window Regulator Motor Connector
(5) Door Trim Panel
(6) Waterproof Sheet

Removal

1. Disconnect the battery ground cable.
2. Remove door trim panel.
   - Refer to Rear Door Trim Panel in Exterior / Interior Trim section.
3. Remove waterproof sheet (1).
   - Taking notice of the door harness, peel the waterproof sheet off the door panel carefully.

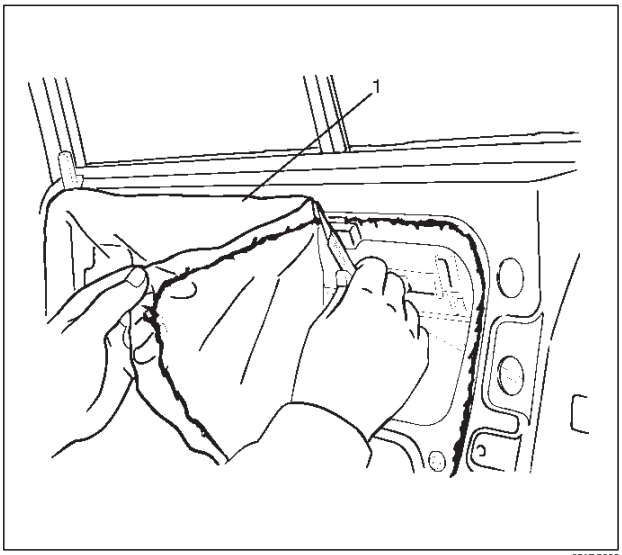

651RS002

Downloaded from www.Manualslib.com manuals search engine

4. Remove glass.
   - Bring the glass down to the position where the bolt can be seen.
   - Remove the sash division 2 fixing bolts (1) and then remove the glass fixing bolt to remove the glass upwards.

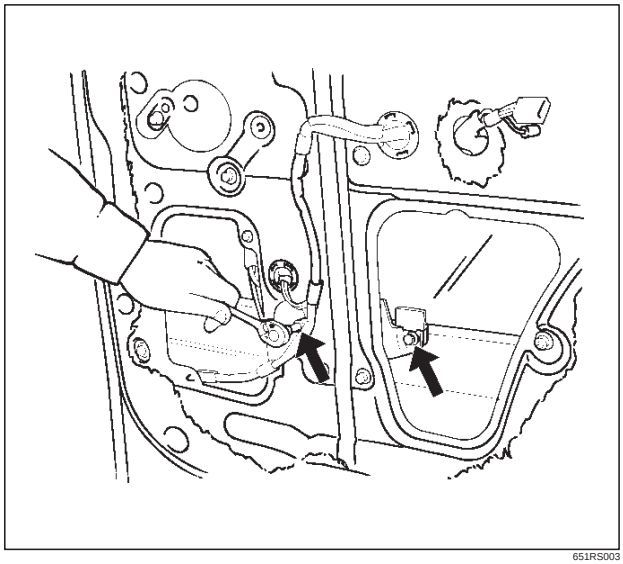

651RS003

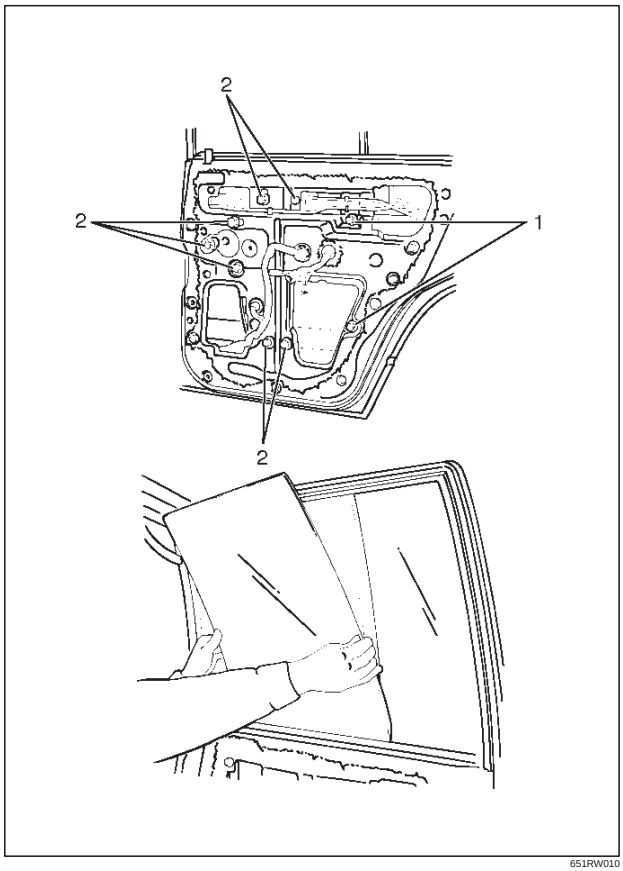

651RW010

5. Remove window regulator.
   - Disconnect the regulator motor connector (4) and remove the window regulator cable fixing clip (3) from the door panel, if model is equipped with power windows.
   - Remove the window regulator 7 fixing bolts (2) and pull the regulator out from the lower hole of the door panel.

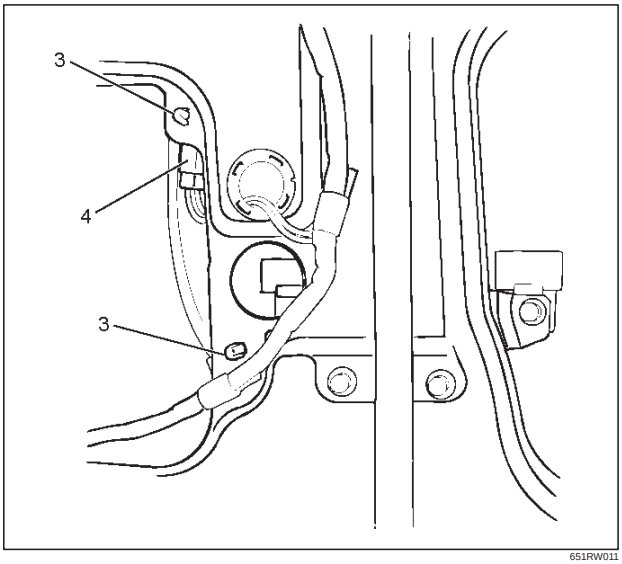

651RW011

Installation

To install, follow the removal steps in the reverse order, noting the following points.

1. Tighten the window regulator and the glass fixing bolts to the specified torque.

   Torque : 8 N•m (69 lb in)

2. Install the waterproof sheet with no clearance between the door panel and the waterproof sheet.

Downloaded from www.Manualslib.com manuals search engine

Rear Door Fixed Glass And Glass Run

Parts Location

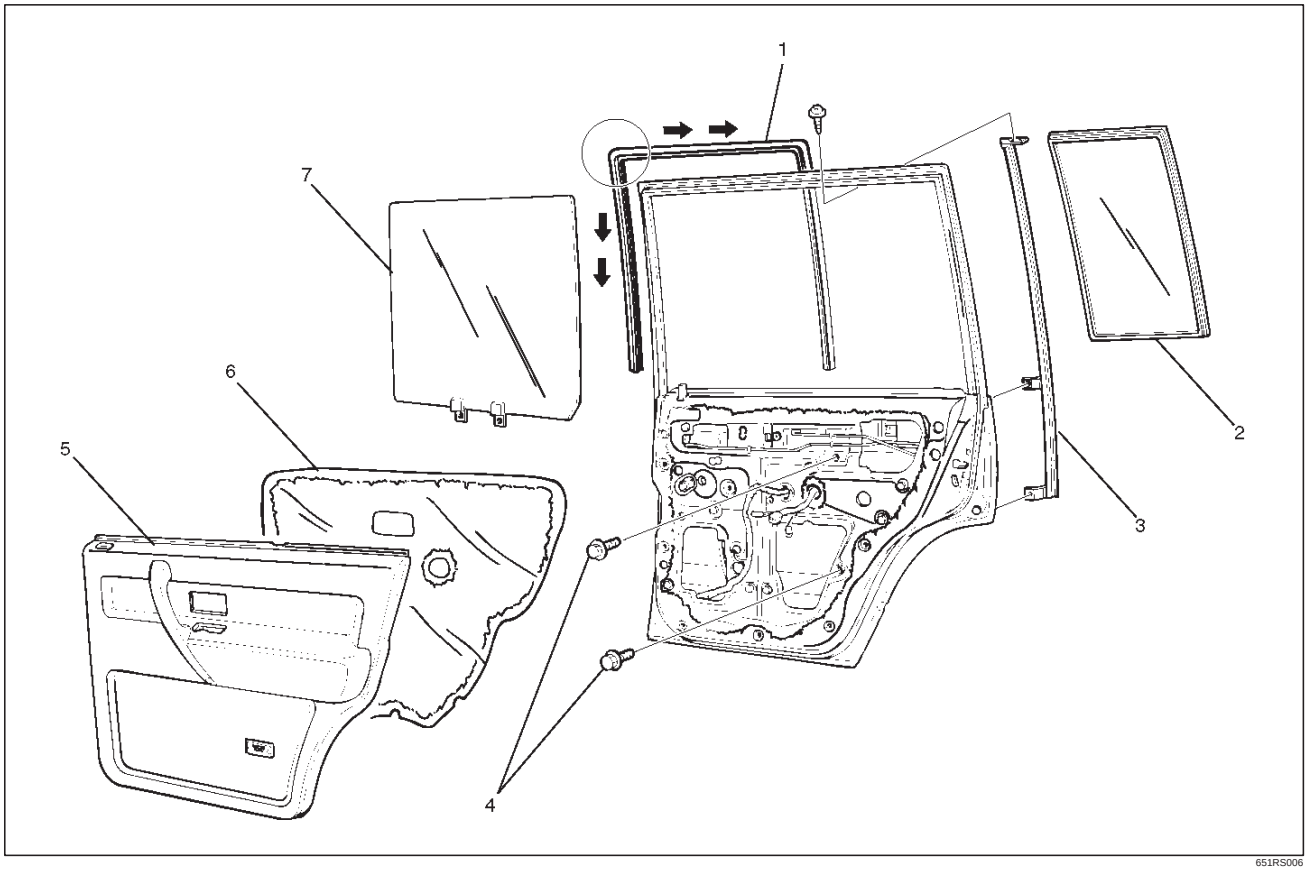

651RS006

Legend

(1) Glass Run
(2) Rear Fixed Glass
(3) Sash Division
(4) Sash Division Fixing Bolts
(5) Door Trim Panel
(6) Waterproof Sheet
(7) Glass

Removal

1. Disconnect the battery ground cable.
2. Remove door trim panel.
3. Remove waterproof sheet.
4. Remove glass.
   - Refer to Rear Window Regulator and Glass in this section.
5. Remove glass run.
   - Pull the glass run (1) out from the door frame.

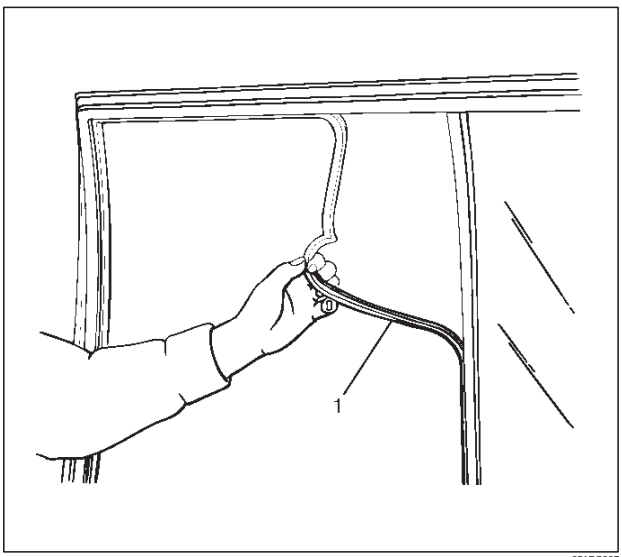

651RS007

Downloaded from www.Manualslib.com manuals search engine

6. Remove sash division (2).

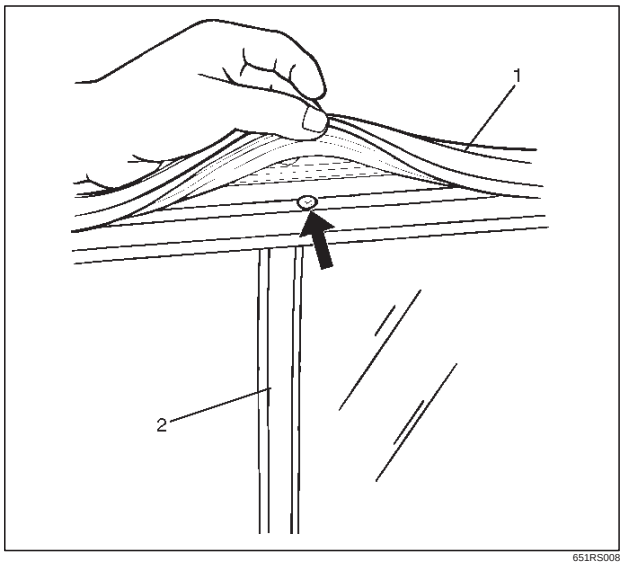

651RS008

7. Remove door fixed glass.

Installation

To install, follow the removal steps in the reverse order, noting the following points.

1. Apply soap and water to the fixed glass.
2. Apply soap and water to the door groove and insert the glass run (3) to the frame from the corner in the arrow-marked directions.
3. Be sure to install the glass run with its end pointed to the inside of the vehicle.

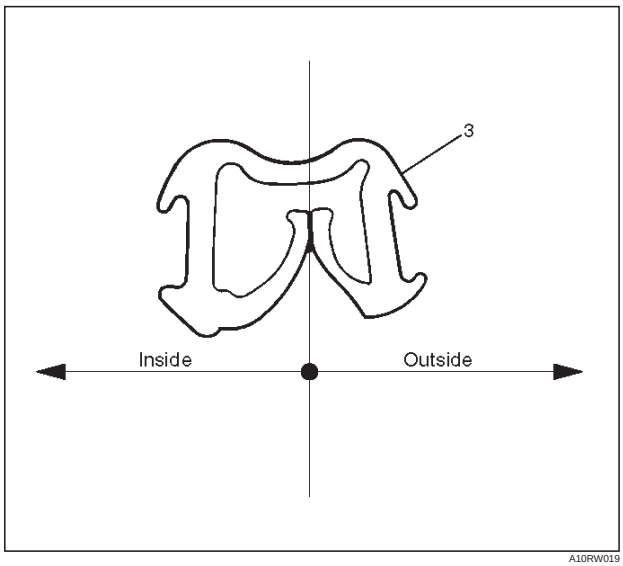

A10RW019

Downloaded from www.Manualslib.com manuals search engine

Front Door Sash Moulding

Parts Location

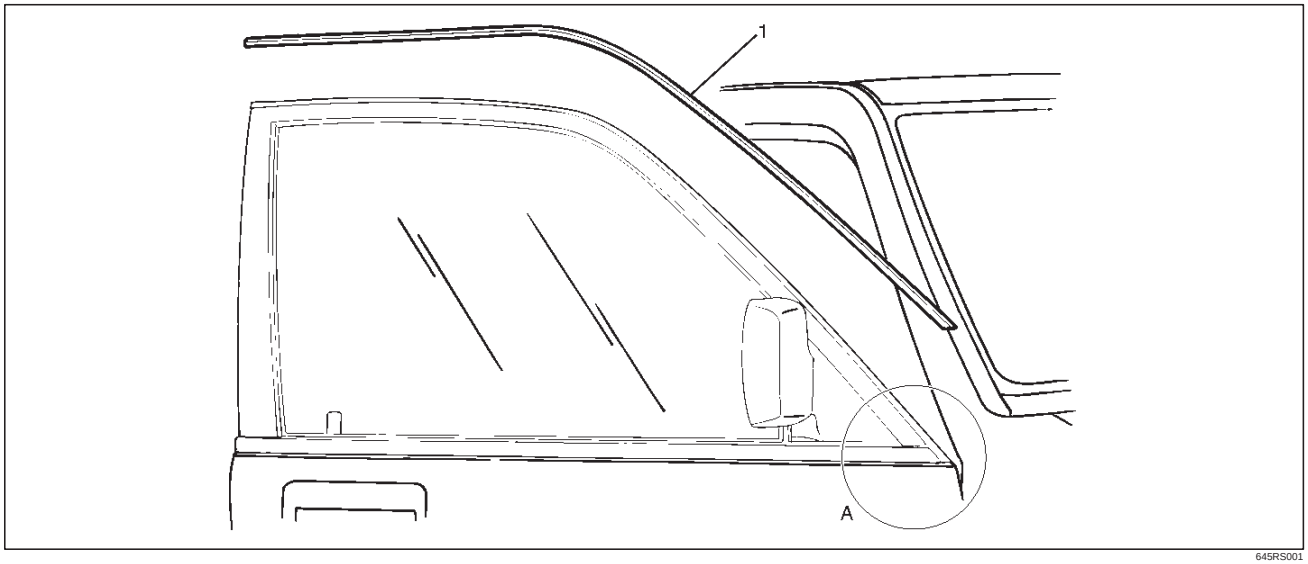

645RS001

Legend

(1) Front Door Sash Moulding

Removal

1. Remove front door slash moulding.
   - To avoid the weatherstrip (1) and pry the door sash moulding (2) out from the door panel.

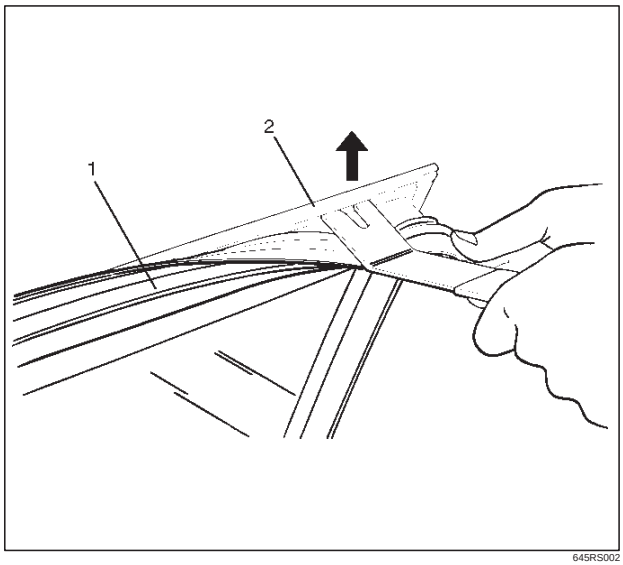

645RS002

Installation

1. Front door sash moulding.
   - Assemble the edge portion (A portion) of the moulding so that the clearance between the moulding and the waist seal becomes 1 mm (0.04 in).

Downloaded from www.Manualslib.com manuals search engine

Rear Door Moulding

Parts Location

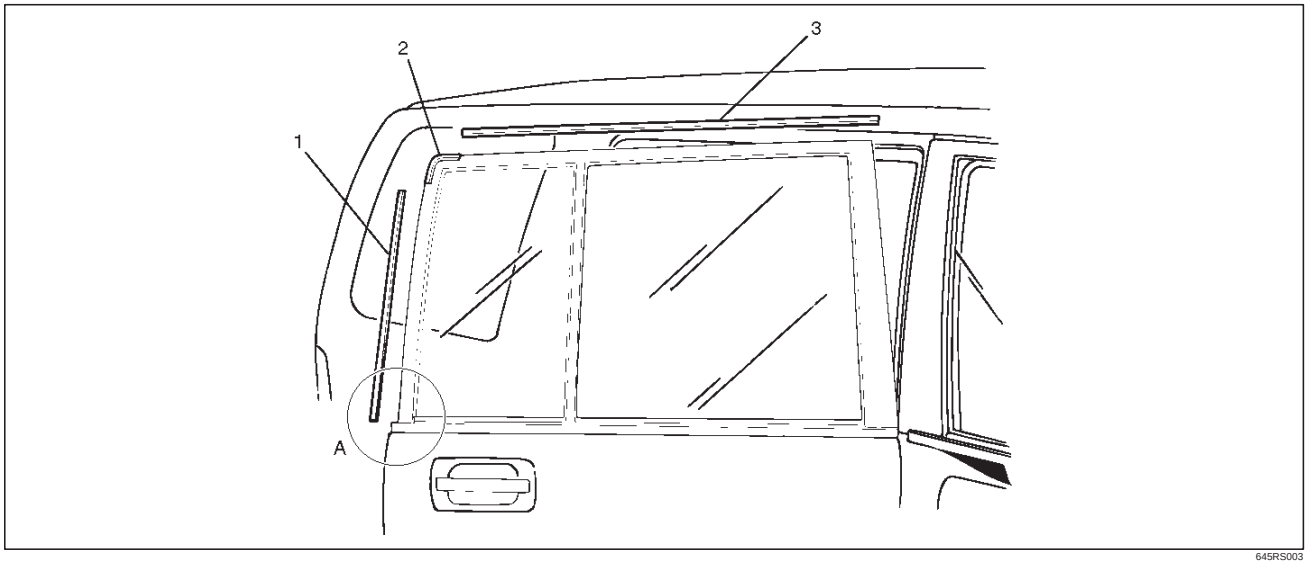

645RS003

Legend

(1) Rear Door Side Moulding
(2) Rear Door Corner Moulding
(3) Rear Door Upper Moulding

Removal

1. Disconnect the battery ground cable.
2. Remove rear door side moulding.
3. Remove rear door upper moulding.
4. Remove rear door corner moulding.
   - Avoiding the weatherstrip (3), pry the moulding (2) out from the door frame (1).

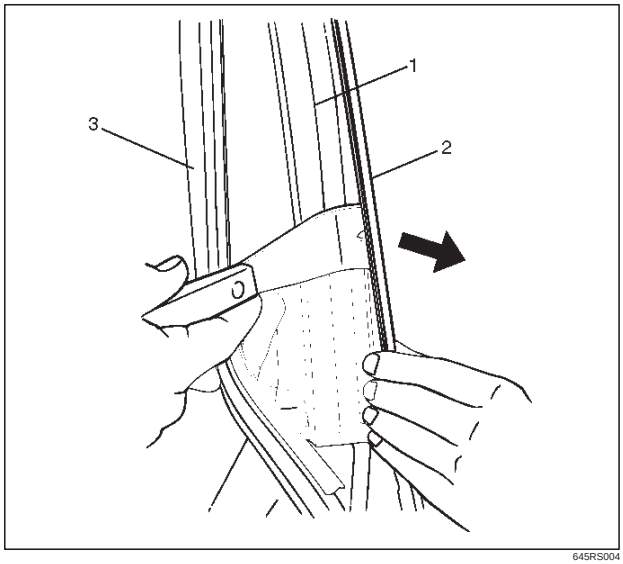

645RS004

Installation

To install, follow the removal steps in the reverse order, noting the following points.

1. Install each moulding with no clearance between each piece of moulding.
2. Assemble the edge portion (A portion) of the moulding so that the clearance between the rear side moulding and the waist seal is 1 mm (0.04 in).

Downloaded from www.Manualslib.com manuals search engine

Front Door Waist Seal

Parts Location

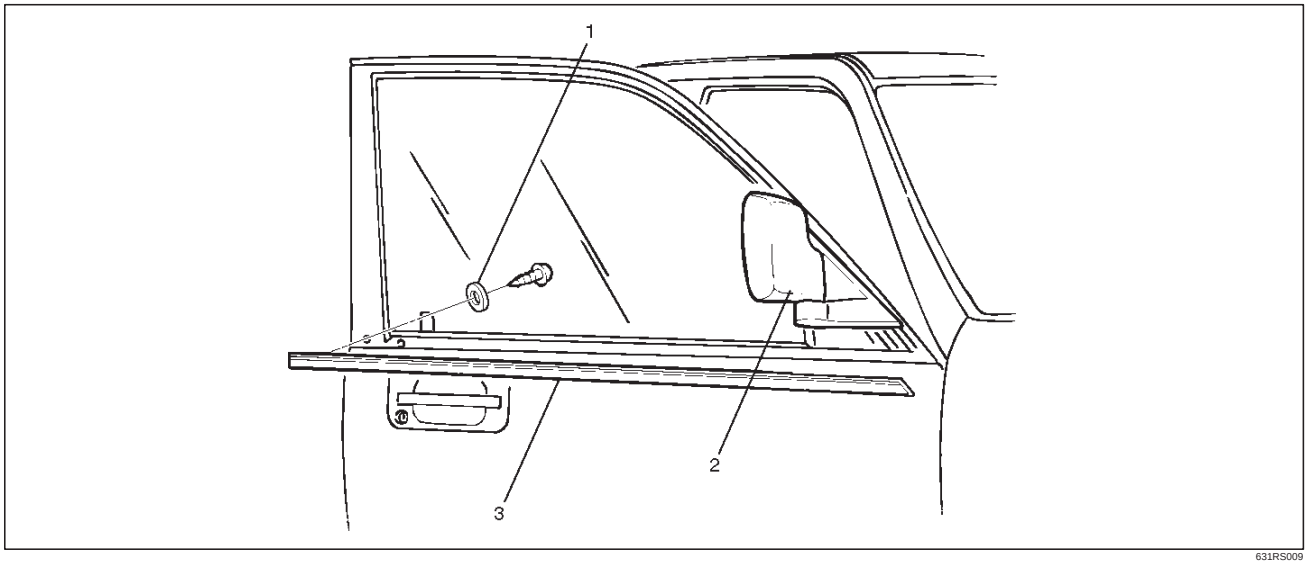

631RS009

Legend

(1) Nylon Washer
(2) Door Mirror
(3) Front Door Waist Seal

Removal

1. Disconnect the battery ground cable.
2. Remove door mirror.
   - Refer to Door Mirror in this section.
3. Remove front door waist seal.
   - Remove the fixing screw and pull out the waist seal (1) from the door frame while prying it up.

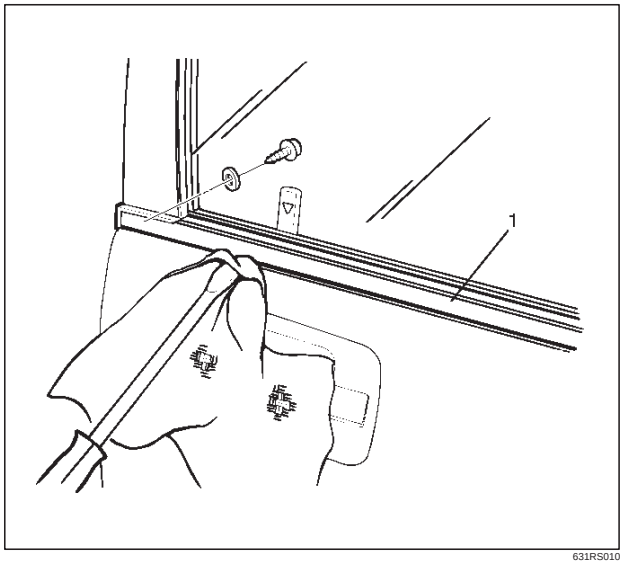

631RS010

Installation

To install, follow the removal steps in the reverse order, noting the following point.

1. Apply soap and water to the inside of the waist seal and align the screw hole of the waist seal to the door panel hole, and gently tap the seal with a rubber hammer.

   Be sure not to tap the seal hard. This may result in deforming the seal.

Downloaded from www.Manualslib.com manuals search engine

Rear Door Waist Seal

Parts Location

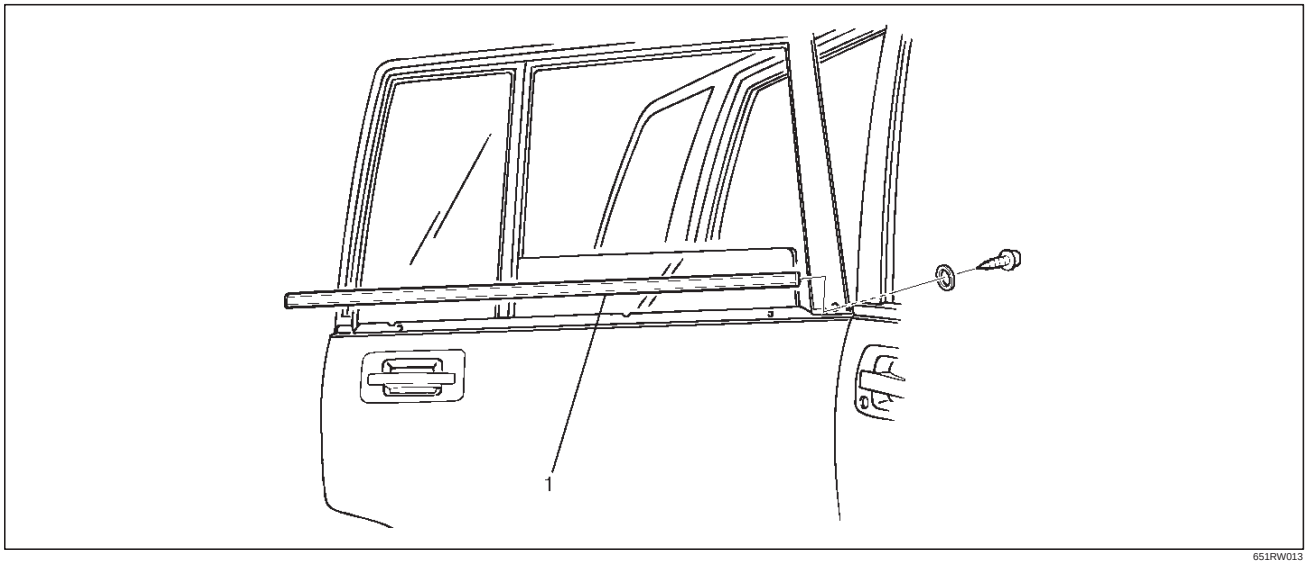

651RW013

Legend

(1) Rear Door Waist Seal

Removal and Installation

Refer to Front Door Waist Seal in this section.

Downloaded from www.Manualslib.com manuals search engine

Front Door Weatherstrip

Parts Location

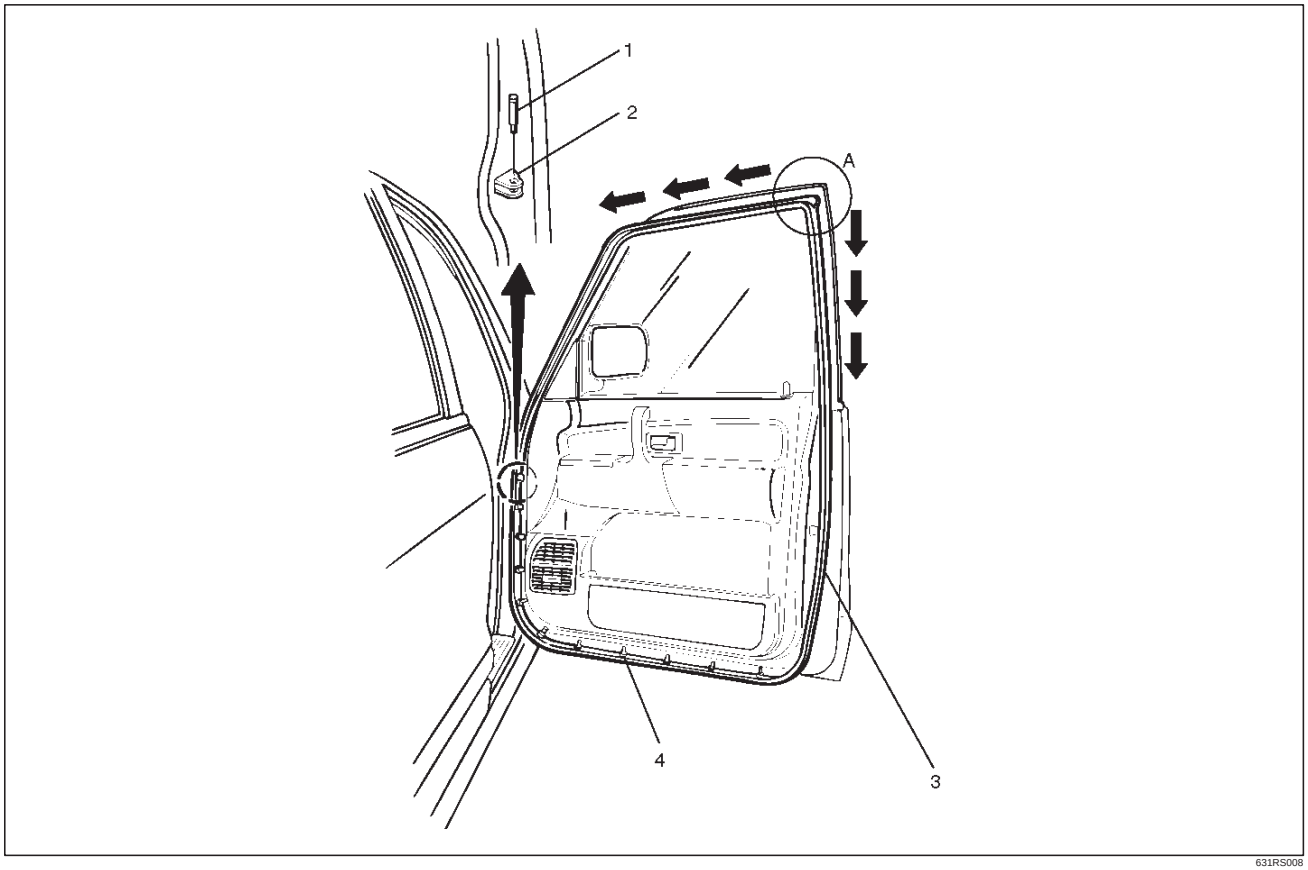

631RS008

Legend

(1) Check Arm Pin
(2) Bracket
(3) Weather Strip
(4) Clip

Removal

1. Remove check arm pin.
2. Remove front door weatherstrip.
   - Pull the weatherstrip (1) out from the door frame.

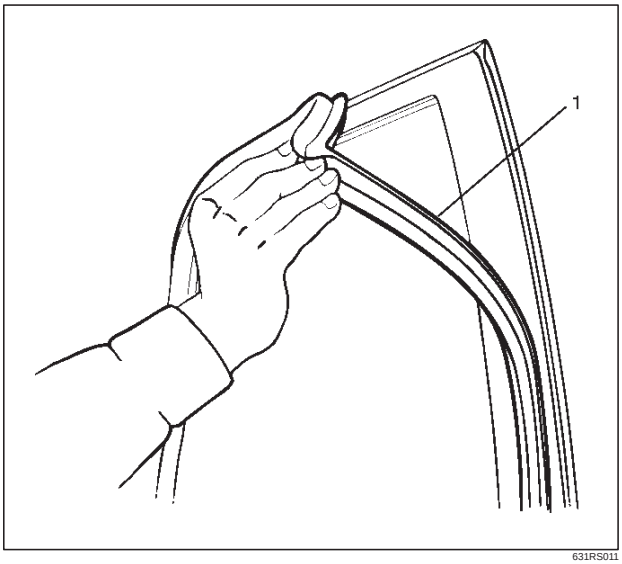

631RS011

Downloaded from www.Manualslib.com manuals search engine

- Carefully remove the weatherstrip (2) from the door panel.

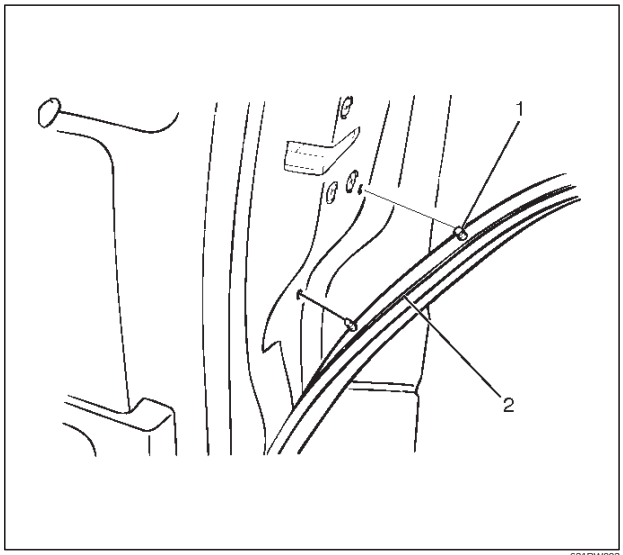

631RW003

Installation

To install, follow the removal steps in the reverse order, noting the following points.

1. Apply soapy water to the door frame groove, when installing the front door weatherstrip (2).
2. Apply the sealing adhesive (3) to the upper A portion of the door frame (1) and press it for installation after assembling the weatherstrip (2).

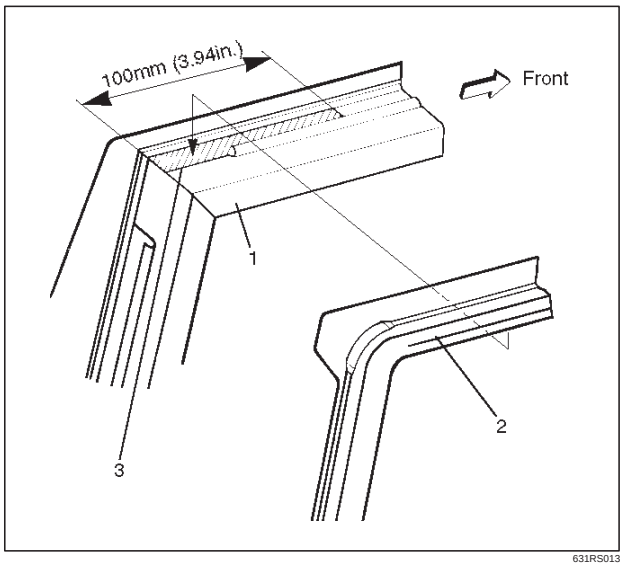

631RS013

3. After positioning the weatherstrip (4) corner, insert the weatherstrip into the door frame groove from A point in the arrow–marked direction.
4. Insert the weatherstrip clip (5) into the door panel up to its base.

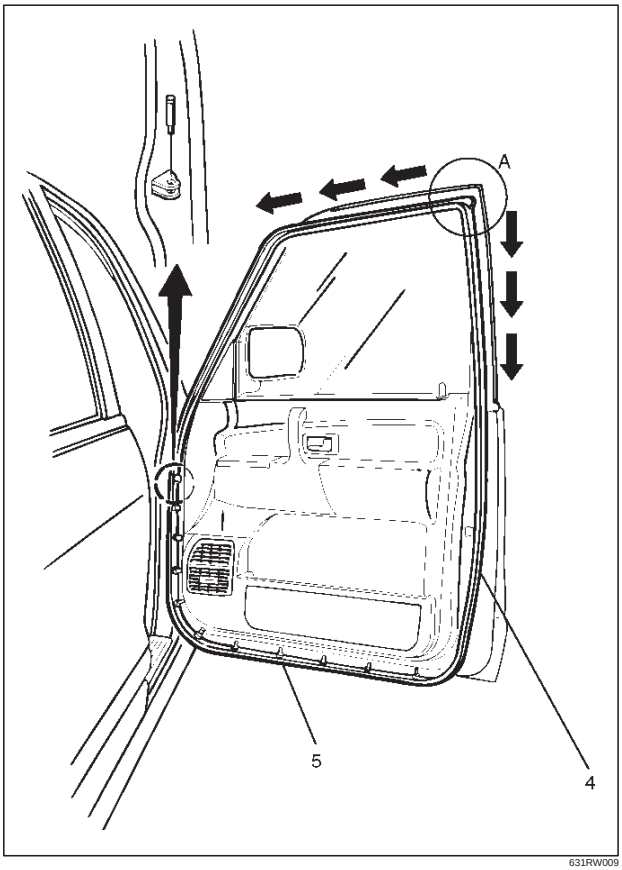

631RW009

Downloaded from www.Manualslib.com manuals search engine

Rear Door Weatherstrip

Parts Location

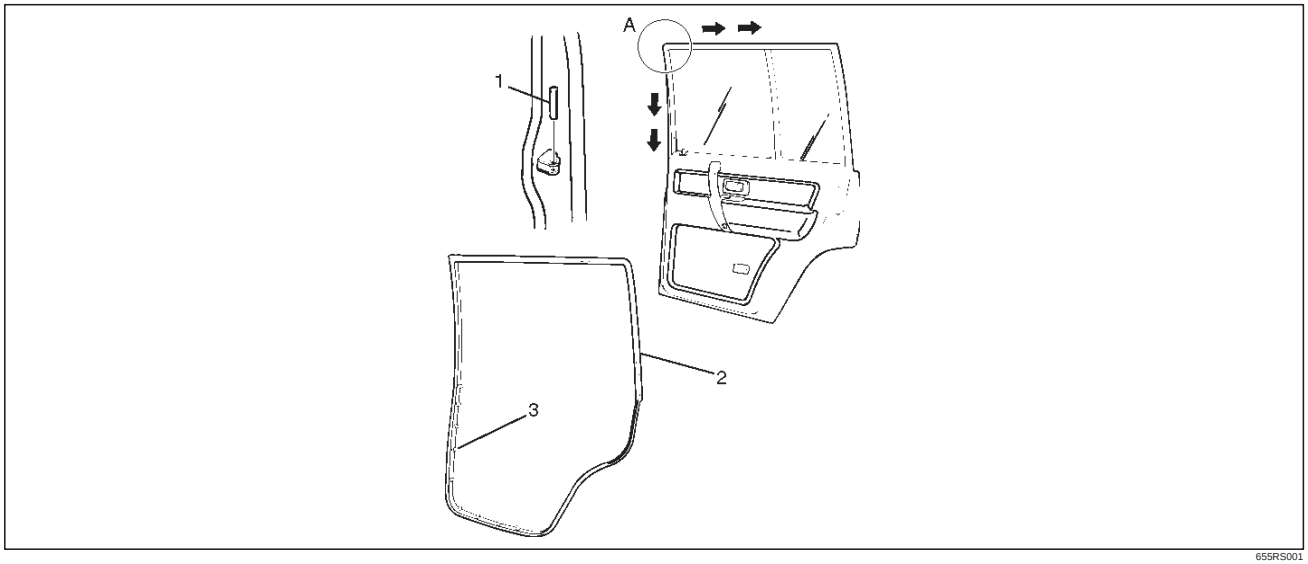

655RS001

Legend

(1) Check Arm Pin
(2) Rear Door Weather Strip
(3) Clip

Removal and Installation

Refer to Front Door Weatherstrip in this section.

Downloaded from www.Manualslib.com manuals search engine

Front Door Seal Finisher

Parts Location

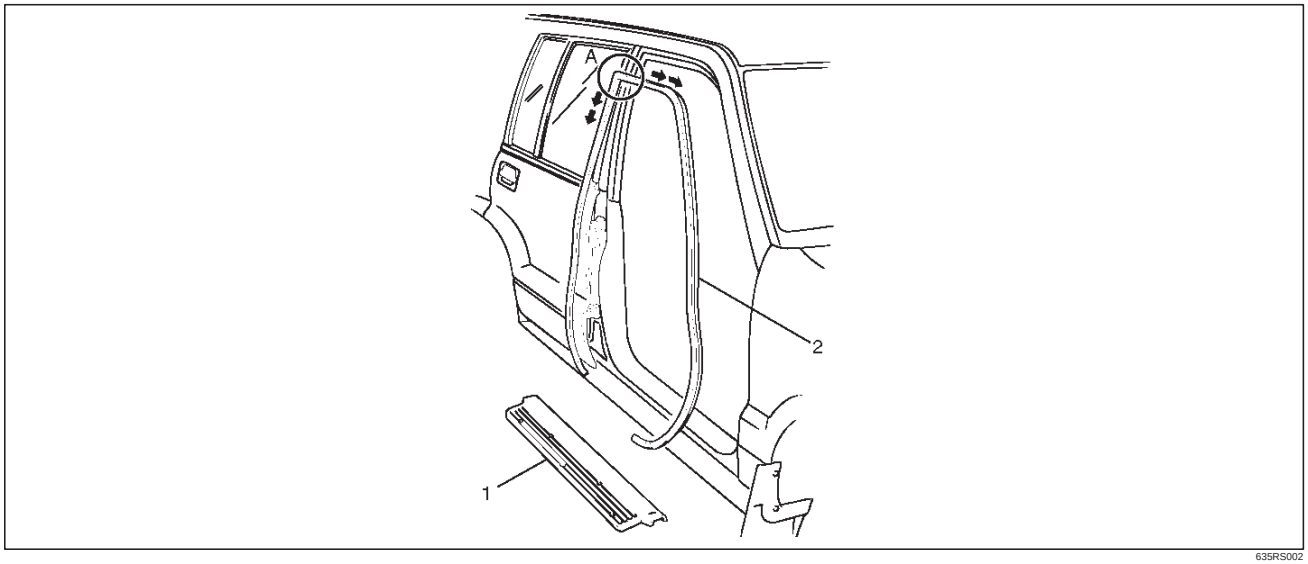

635RS002

Legend

(1) Front Door Sill Plate
(2) Front Door Seal Finisher

Removal

1. Disconnect the battery ground cable.
2. Remove front door sill plate.
3. Remove front door seal finisher (1).
   - Pull the finisher out from the body panel.

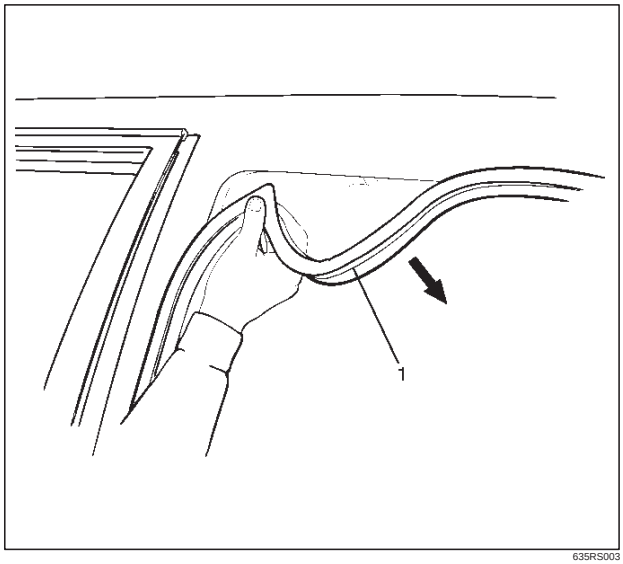

635RS003

Installation

To install, follow the removal steps in the reverse order, noting the following points.

1. Insert the finisher (2) into the A corner and install the finisher in the arrow–marked directions.
2. Take care not to allow the sill plate (1) to distort or twist the finisher.

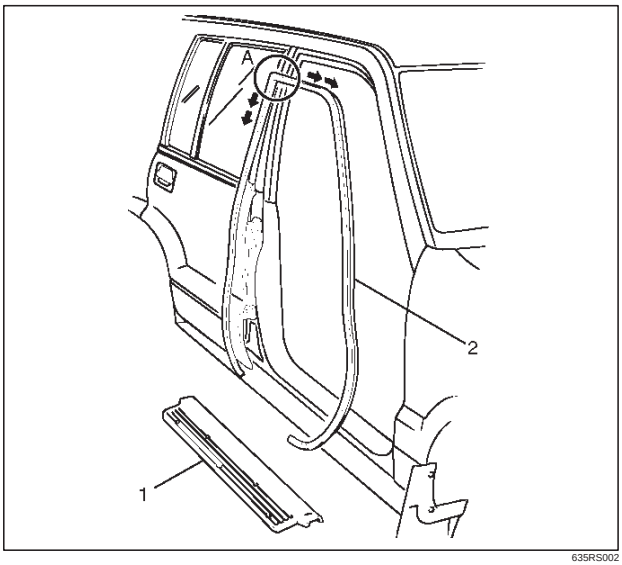

635RS002

Downloaded from www.Manualslib.com manuals search engine

Rear Door Seal Finisher

Parts Location

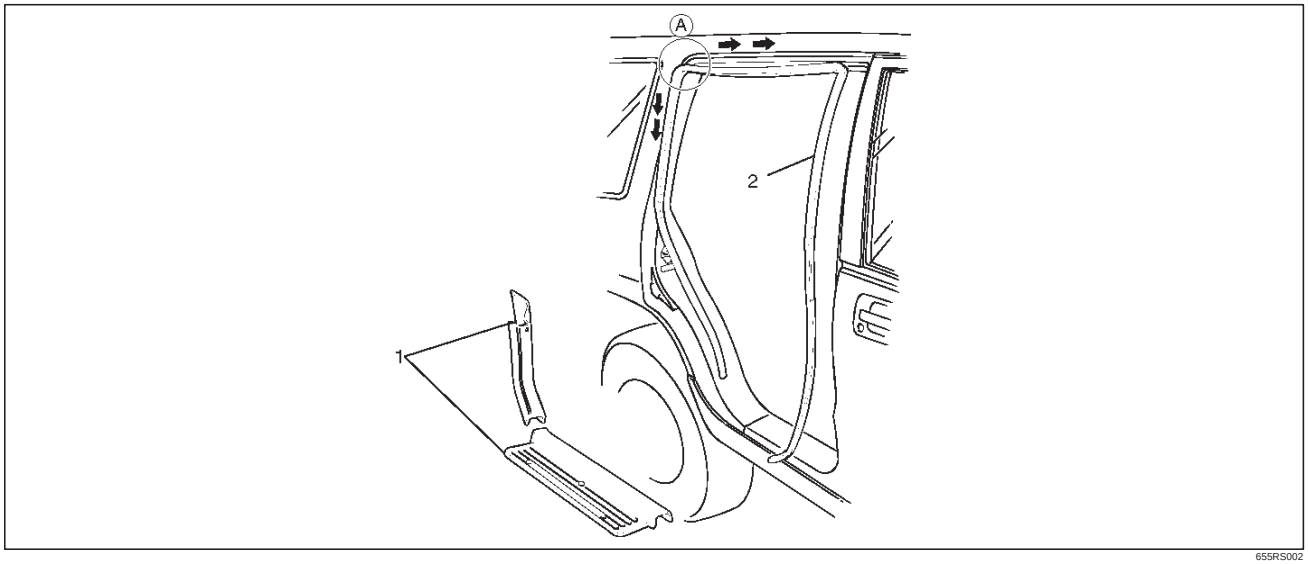

655RS002

Legend

(1) Rear Door Sill Plate and Luggage Side Lower Cover
(2) Rear Door Seal Finisher

Removal

1. Disconnect the battery ground cable.
2. Remove rear door sill plate and the luggage side lower cover.
3. Remove rear door seal finisher (1).
   - Pull the rear door seal finisher (1) out from the body panel.

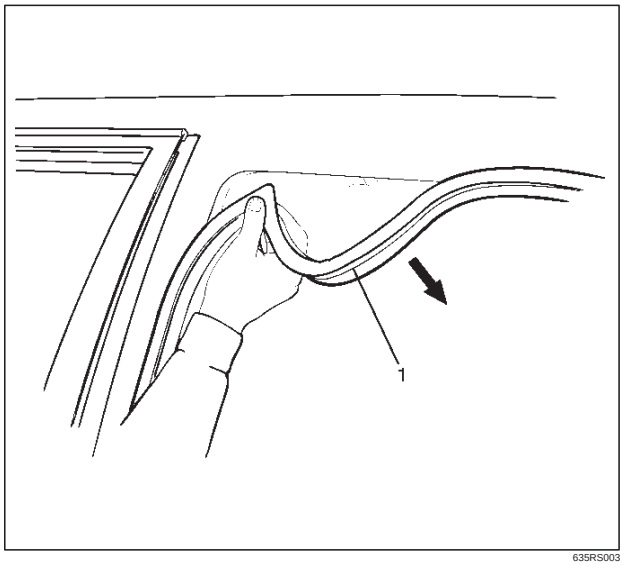

635RS003

Installation

To install, follow the removal steps in the reverse order, noting the following points.

1. Insert the rear door seal finisher (2) into the A corner and install the finisher in the arrow-marked directions.
2. Be careful not to allow the sill plate and cover (1) to distort or twist the finisher.

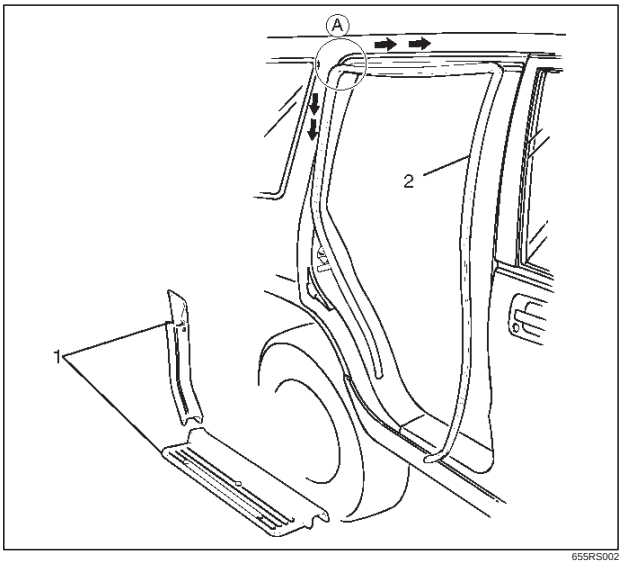

655RS002

Downloaded from www.Manualslib.com manuals search engine

Tailgate Assembly (LH)

Parts Location

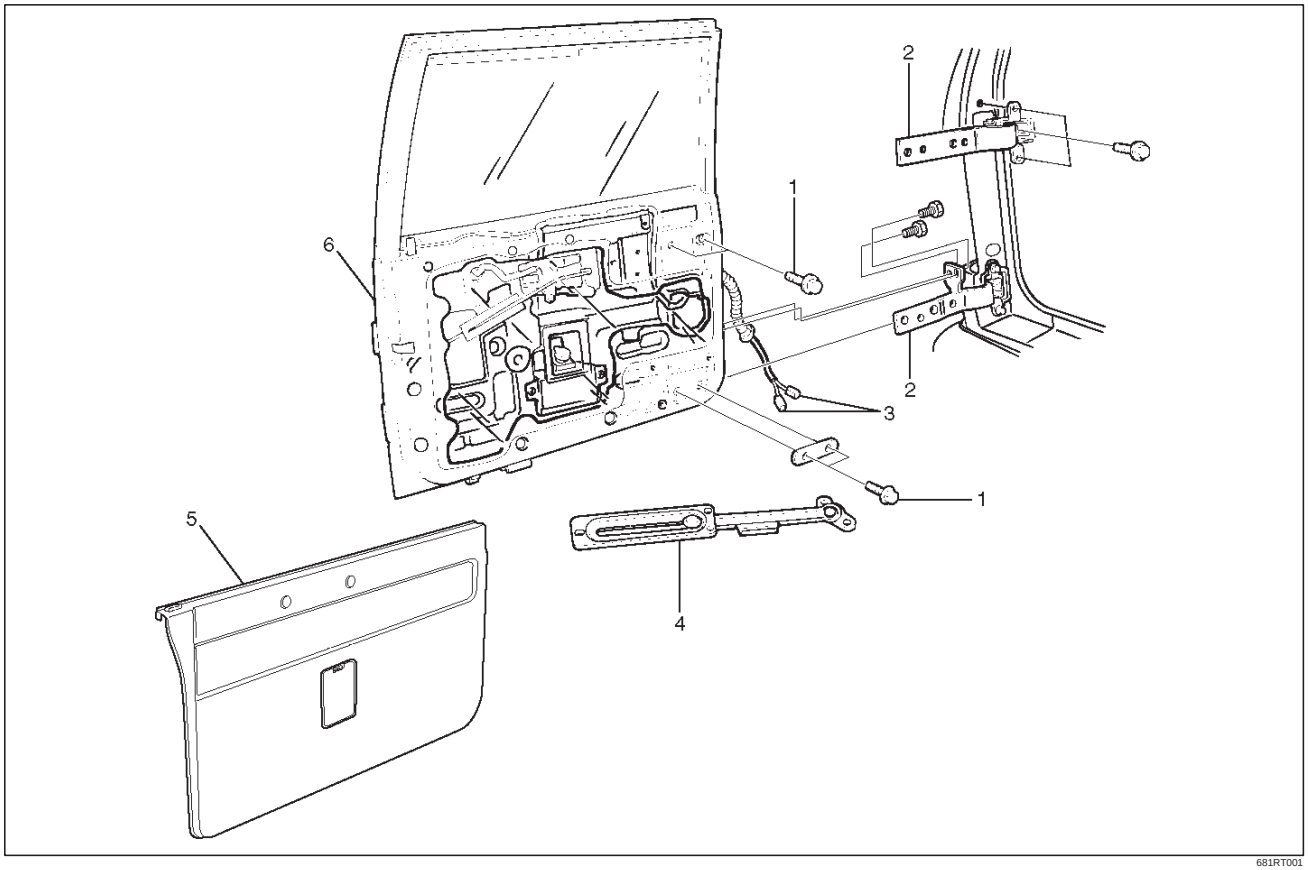

681RT001

Legend

(1) Tailgate Fixing Bolt
(2) Tailgate Hinge
(3) Tailgate Harness Connection
(4) Tailgate Stopper Assembly
(5) Tailgate Trim Panel (LH)
(6) Tailgate Assembly (LH)

Removal

1. Disconnect the battery ground cable.
2. Remove tailgate time panel (LH).
   - Refer to Tailgate Trim Panel (LH) in Exterior / Interior Trim section.
3. Remove tailgate stopper assembly
4. Remove tailgate harness connection.
   - Open the luggage trim panel lid and disconnect the tailgate harness connection.

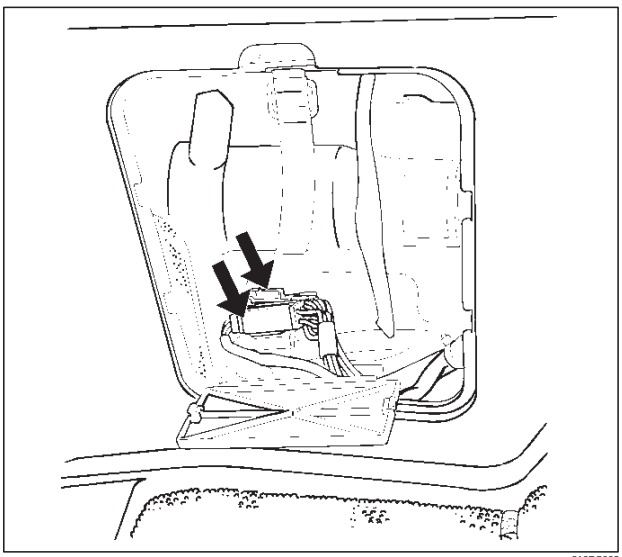

810RS003

Downloaded from www.Manualslib.com manuals search engine

5. Remove tailgate fixing bolts.

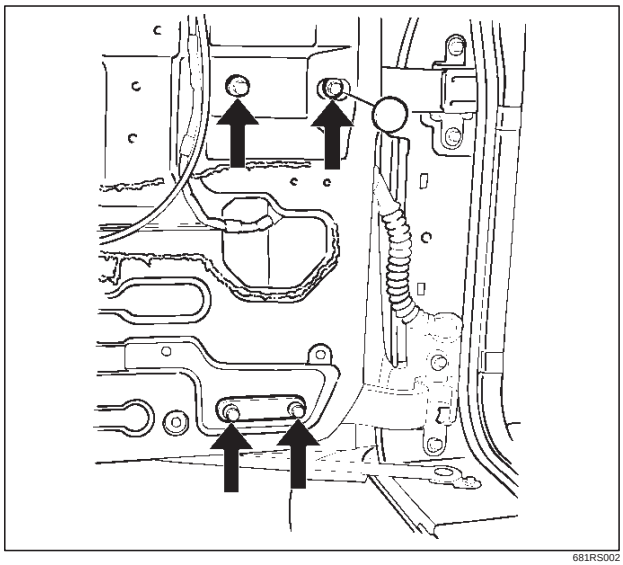

681RS002

6. Remove tailgate assembly (LH).
7. Remove tailgate hinge.
   - Apply a setting mark (1) on the body side hinge and remove the hinge fixing bolts.

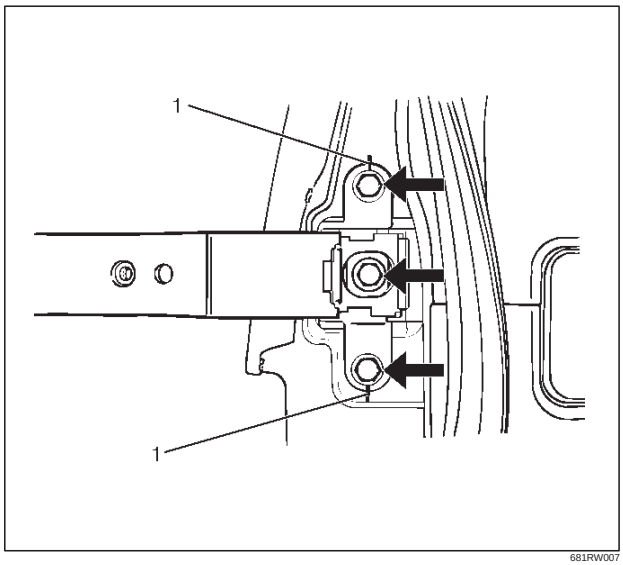

681RW007

Installation

To install, follow the removal steps in the reverse order, noting the following points.

1. Apply chassis grease to the tailgate hinge and the tailgate stopper moving surface.
2. Align the tailgate fitting to the body by referring to Body Dimension in this section.
3. Tighten the hinge bolts to the specified torque.

   Torque : 34 N•m (25 lb ft)

Downloaded from www.Manualslib.com manuals search engine

Tailgate Assembly (RH)

Parts Location

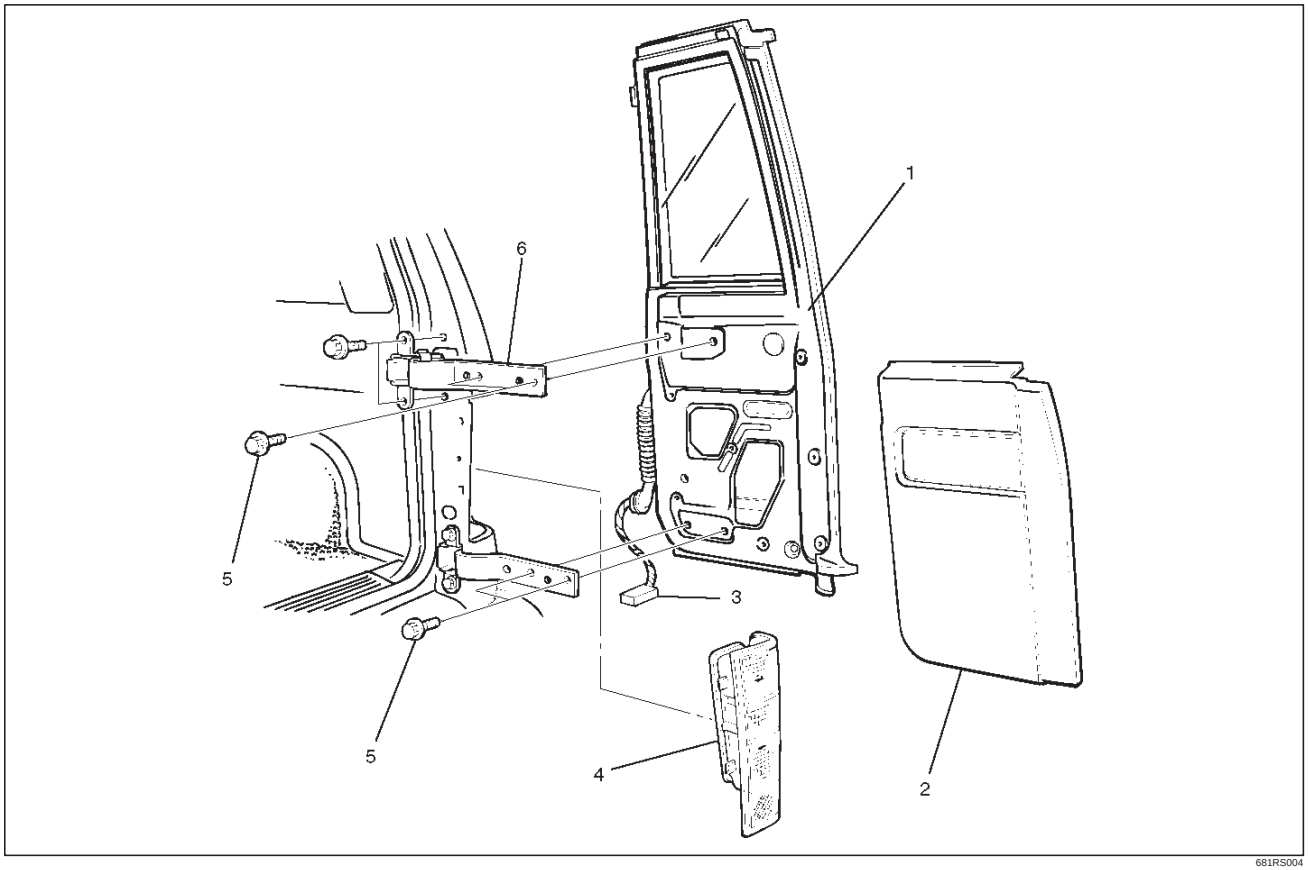

681RS004

Legend

(1) Tailgate Assembly (LH)
(2) Tailgate Trim Panel (RH)
(3) Tailgate Harness Connection
(4) Rear Combination Light (RH)
(5) Tailgate Fixing Bolt
(6) Tailgate Hinge

Removal

1. Disconnect the battery ground cable.
2. Remove rear combination light (RH).
3. Remove tailgate trim panel (RH).
   - Refer to Tailgate Trim Panel (RH) in Exterior / Interior Trim section.
4. Remove tailgate harness connection.
   - Disconnect the tailgate harness connection.

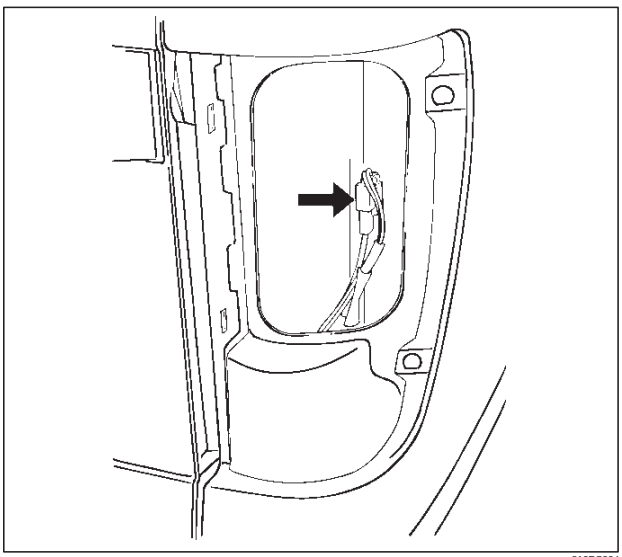

810RS004

Downloaded from www.Manualslib.com manuals search engine

5. Remove tailgate fixing bolt.

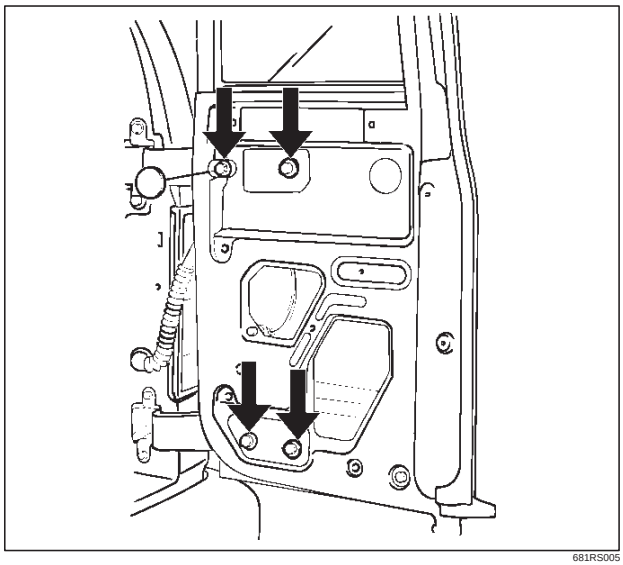

681RS005

6. Remove tailgate assembly (RH).
7. Remove tailgate hinge.
   - Apply a setting mark (1) on the body side hinge and remove the hinge fixing bolts.

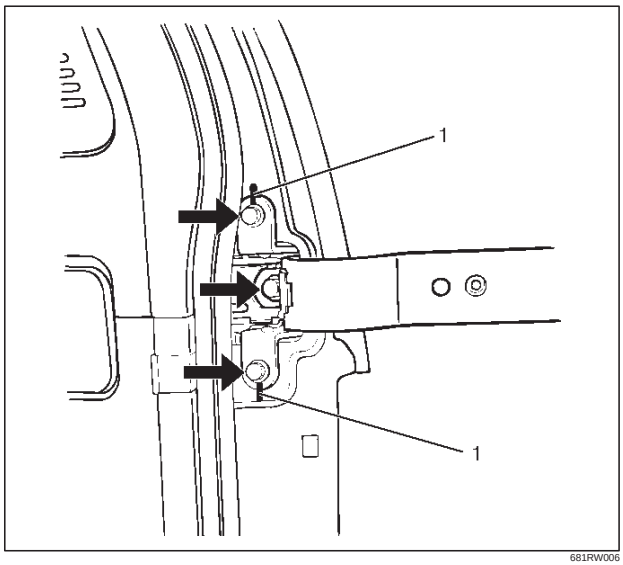

681RW006

Installation

To install, follow the removal steps in the reverse order, noting the following point.

1. Apply chassis grease to the tailgate hinge moving surface.
2. Align the tailgate fitting to the body. Refer to Body Dimension in this section.
3. Tighten the hinge bolts to the specified torque.

   Torque : 34 N•m (25 lb ft)

Downloaded from www.Manualslib.com manuals search engine

Tailgate Strikers

Adjustment

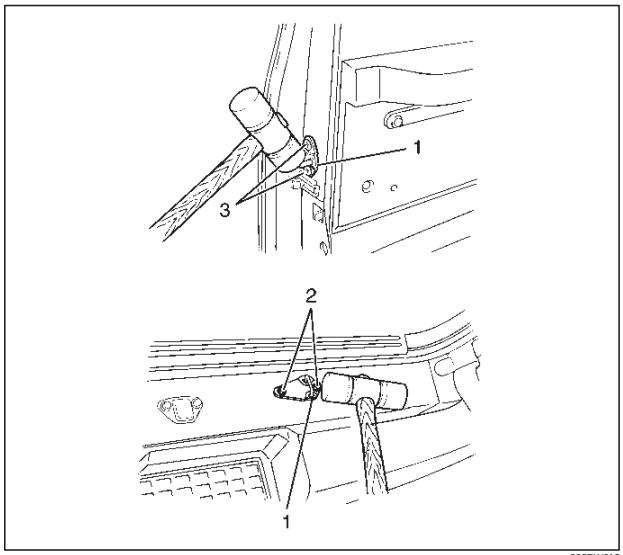

683RW012

1. Loosen the striker screws (3) (or bolts (2)).
2. Tap the striker (1) with a plastic hammer to align.
3. Tighten the striker screws (3) (or bolts (2)).

Screw Torque : 15 N•m (11 lb ft)

Bolt Torque : 12 N•m (104 lb in)

Tailgate Stopper Assembly

Parts Location

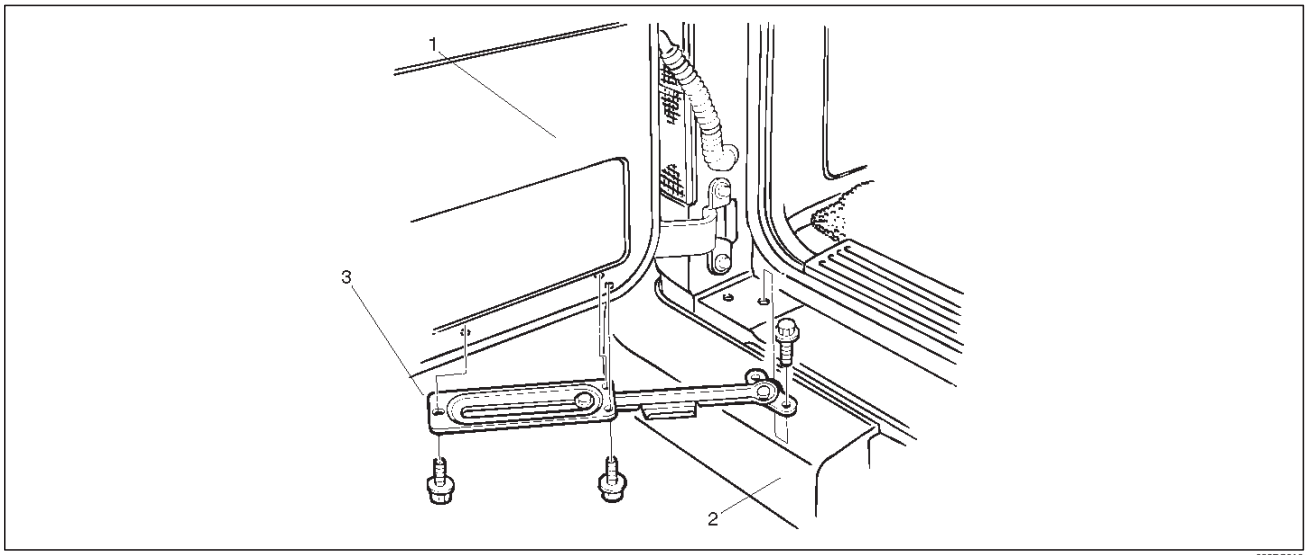

683RS010

Legend

(1) Tailgate
(2) Rear Bumper
(3) Tailgate Stopper Assembly

Removal

1. Remove tailgate stopper assembly.
   - Remove the five bolts.

Installation

To install, follow the removal steps in the reverse order, nothing the following points.

1. Tighten the fixing bolts to the specified torque.

   Torque : 12 N•m (104 lb in)

2. Apply chassis grease to the stopper moving surface.

Downloaded from www.Manualslib.com manuals search engine

Tailgate Dove-Tail

Parts Location

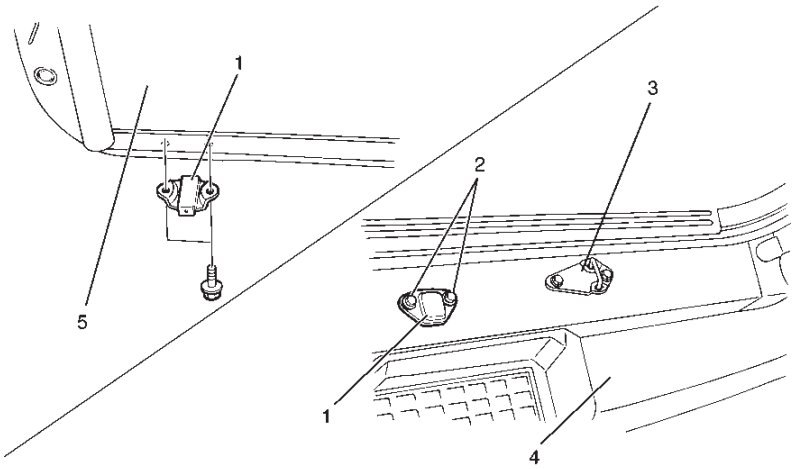

683RW011

Legend

(1) Dove-Tail
(2) Fixing Bolt
(3) Tailgate Striker
(4) Rear Bumper
(5) Tailgate (LH)

Removal

1. Remove tailgate dove-tail.
   - Remove the two bolts from each side.

Installation

To install, follow the removal steps in the reverse order, nothing the following points.

1. Apply chassis grease to the dove–tail (A) moving surface.
2. Tighten the fixing bolts to the specified torque.

   Torque : 12 N•m (104 lb in)

Downloaded from www.Manualslib.com manuals search engine

Tailgate Dove-Tail Striker

Adjustment

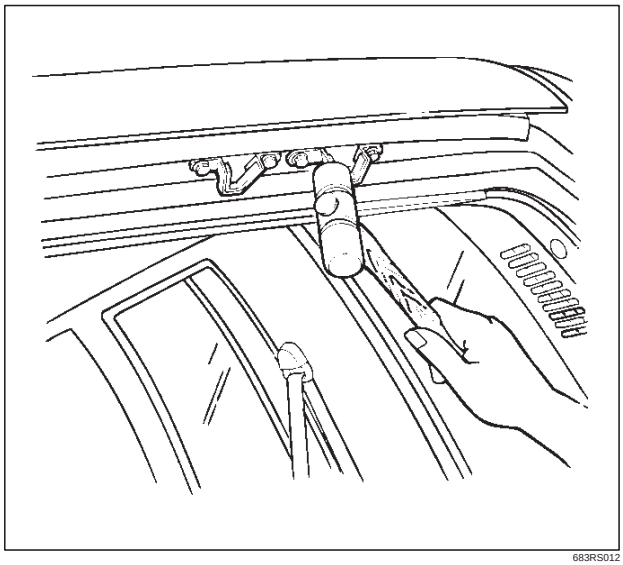

683RS012

1. Loosen the striker bolts.
2. Tap with a plastic hammer to align.
   - Gaps between Dove–Tail Striker (2) and bracket (1) are 0 mm (No clearance).

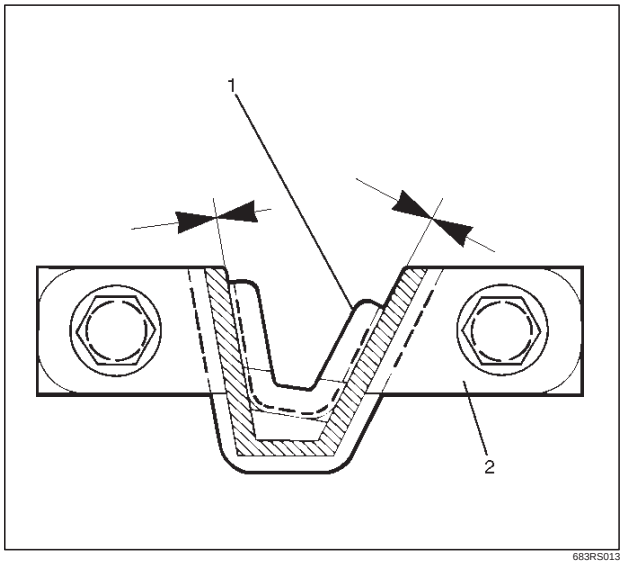

683RS013

3. Tighten striker bolts.

   Torque : 12 N•m (104 lb in)

Downloaded from www.Manualslib.com manuals search engine

Tailgate Frame Cover (LH)

Parts Location

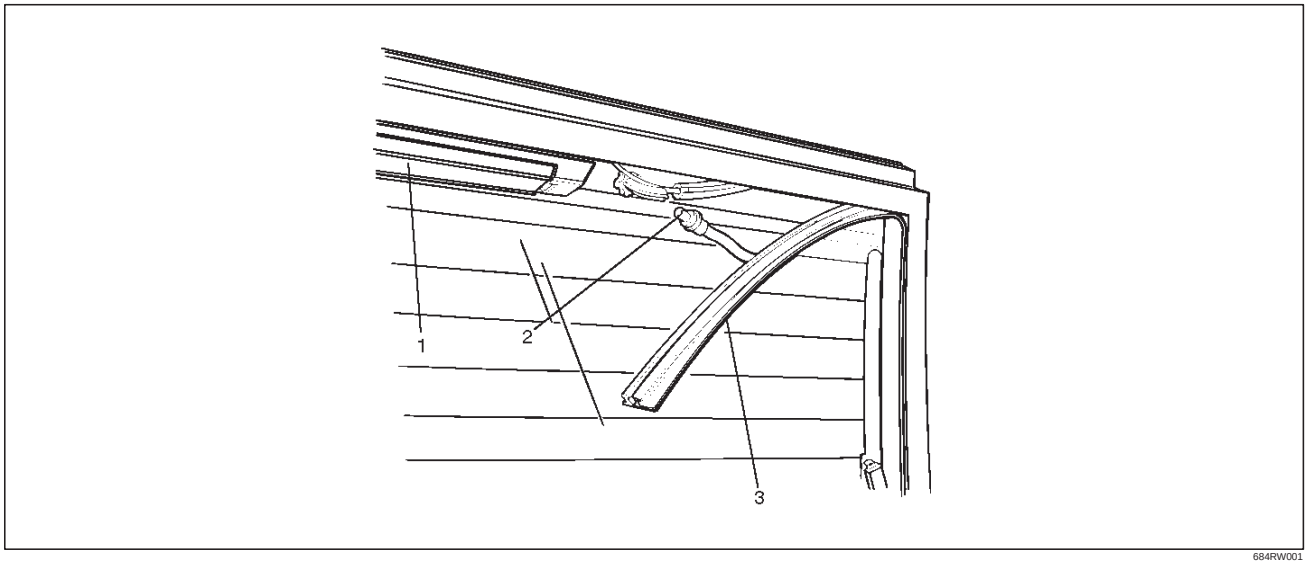

684RW001

Legend

(1) High Mount Stop Light
(2) Washer Tube
(3) Tailgate Frame Cover

Removal

1. Disconnect the battery ground cable.
2. Remove tailgate frame cover.
   - Pull the tailgate frame cover (2) out.
   - Disconnect the washer tube (1) at the nozzle and pull the washer tube out from the frame cover (2).
   - Disconnect the rear defogger and pull the harness from the cover.

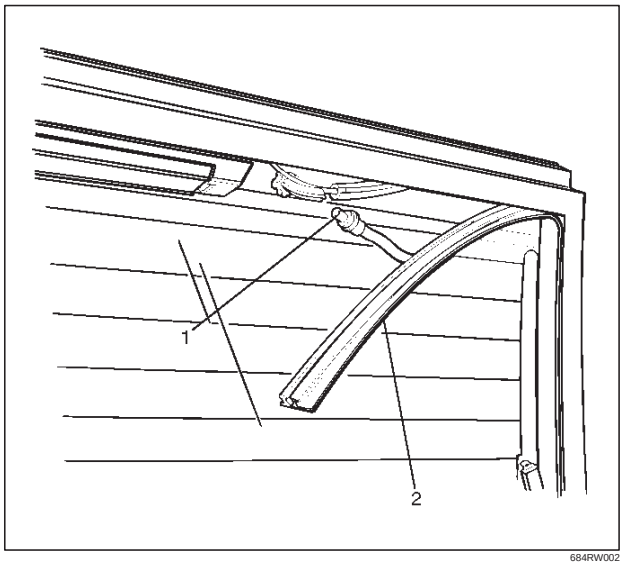

684RW002

Installation

To install, follow the removal steps in the reverse order, noting the following points.

1. Hit the lower A edge portion of the cover (1) to the tailgate flange.
2. Clearance between the frame cover and the tailgate panel (B portion) is 1 mm (0.04 in).

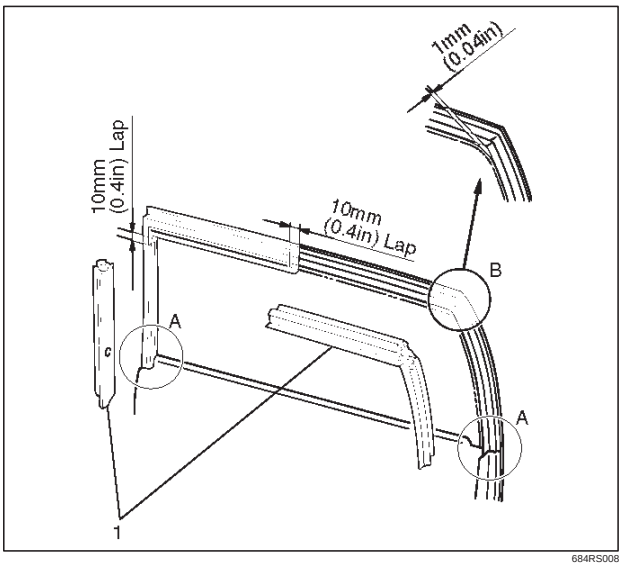

684RS008

Downloaded from www.Manualslib.com manuals search engine

Tailgate Frame Cover (RH)

Removal

1. Remove tailgate frame cover (RH).
   - Pull the frame cover out from the tailgate frame.

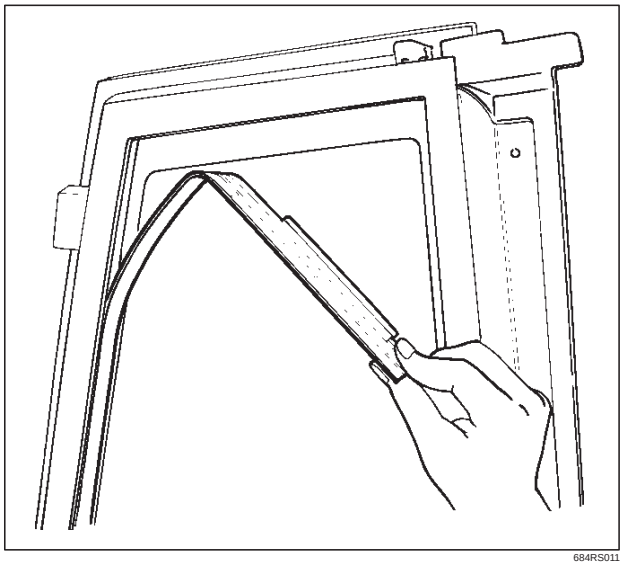

684RS011

Installation

To install, follow the removal steps in the reverse order, noting the following points.

1. Hit the lower A edge portion (2) of the tailgate frame cover (1).
2. Clearance between the frame cover and the tailgate panel (B portion) is 1 mm (0.04 in).

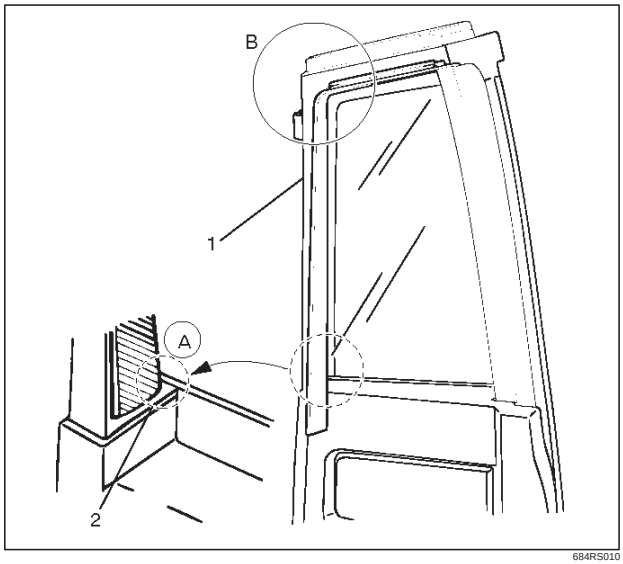

684RS010

Downloaded from www.Manualslib.com manuals search engine

Tailgate Sash Trim Cover

Parts Location

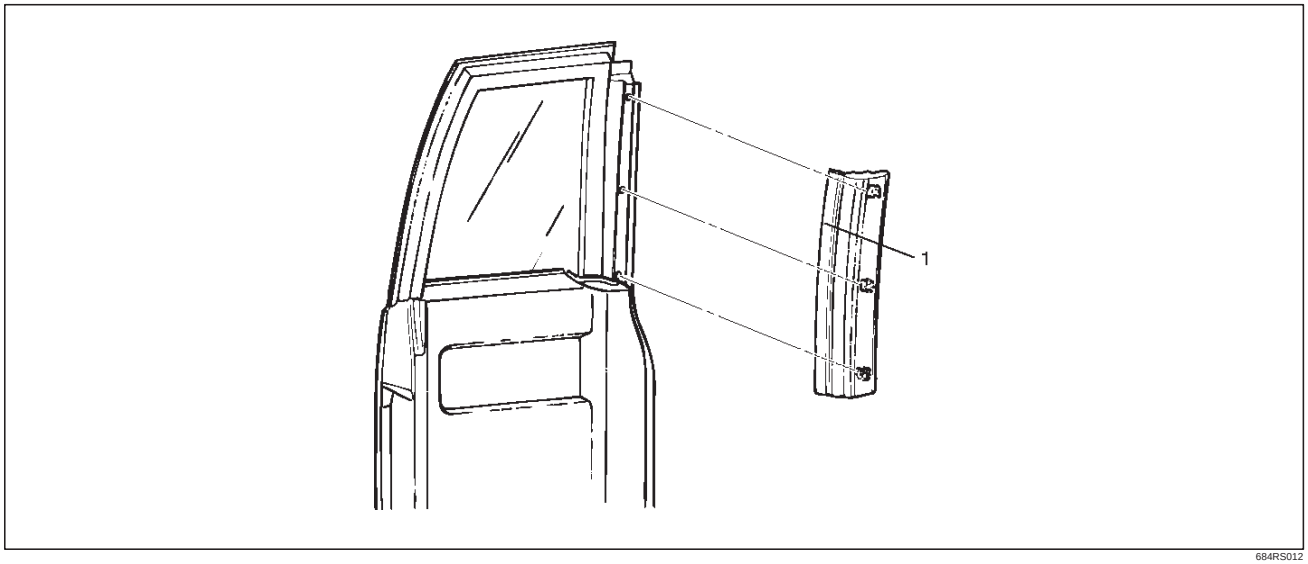

684RS012

Legend

(1) Tailgate Sash Trim Cover

Removal

1. Remove tailgate sash trim cover (1).
   - Pry the tailgate trim cover retainers free from the tailgate panel.

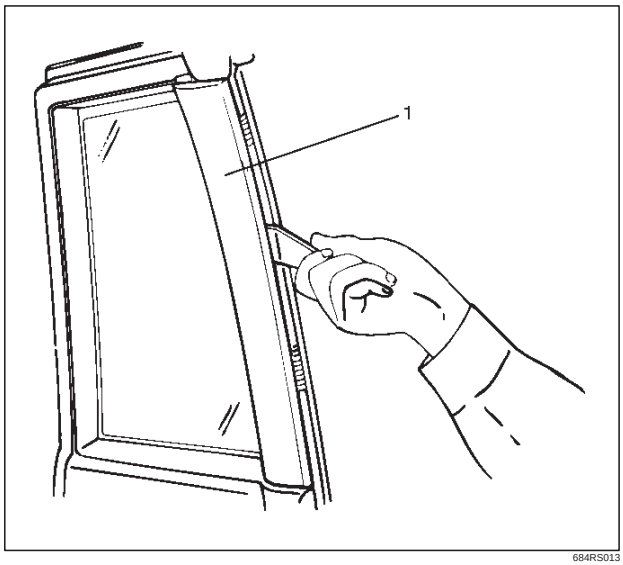

684RS013

Installation

1. Tailgate sash trim cover (1).
   - Insert the trim cover retainers into the tailgate hole securely so that there are no gaps between them.

Downloaded from www.Manualslib.com manuals search engine

Tailgate Outer Weatherstrip

Parts Location

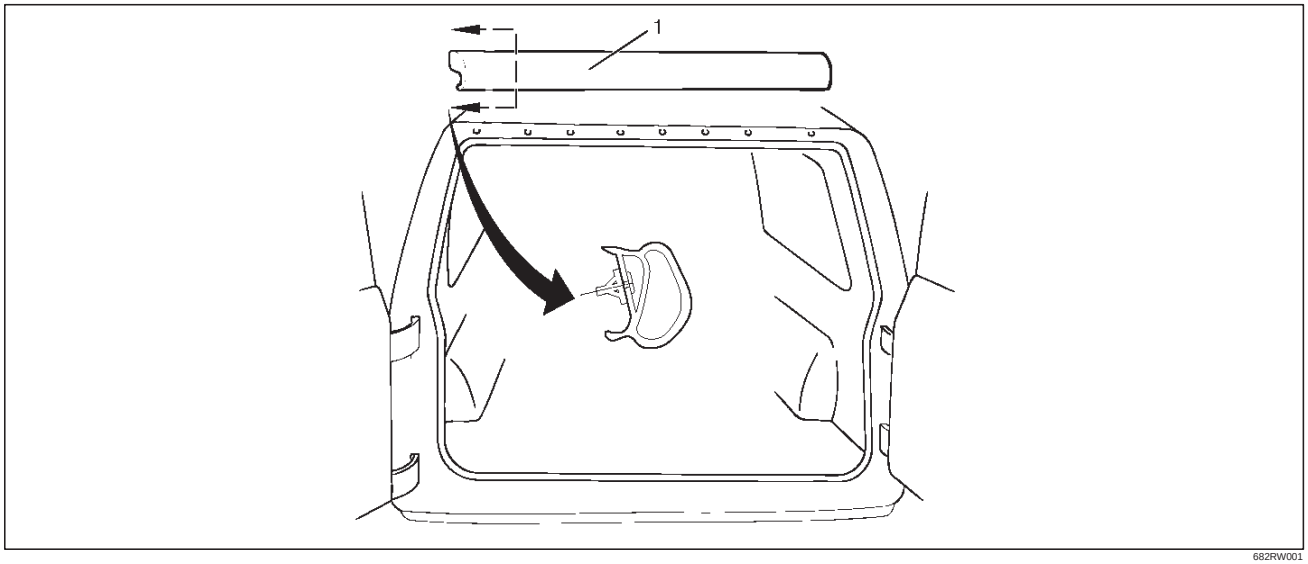

682RW001

Legend

(1) Tailgate Outer Weatherstrip

Removal

1. Disconnect the battery ground cable.
2. Remove tailgate outer weatherstrip (1).
   - Pry the tailgate outer weatherstrip clips (2) free from the body panel.

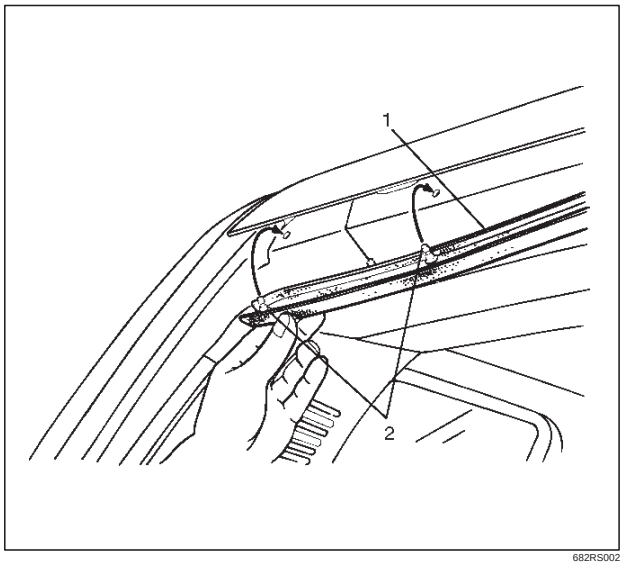

682RS002

Installation

To install, follow the removal steps in the reverse order, noting the following point.

1. Insert the tailgate outer weatherstrip clip into the body panel hole securely in order to install the tailgate outer weatherstrip with the gap between the body panel and the weatherstrip.

Downloaded from www.Manualslib.com manuals search engine

Tailgate Center Weatherstrip

Parts Location

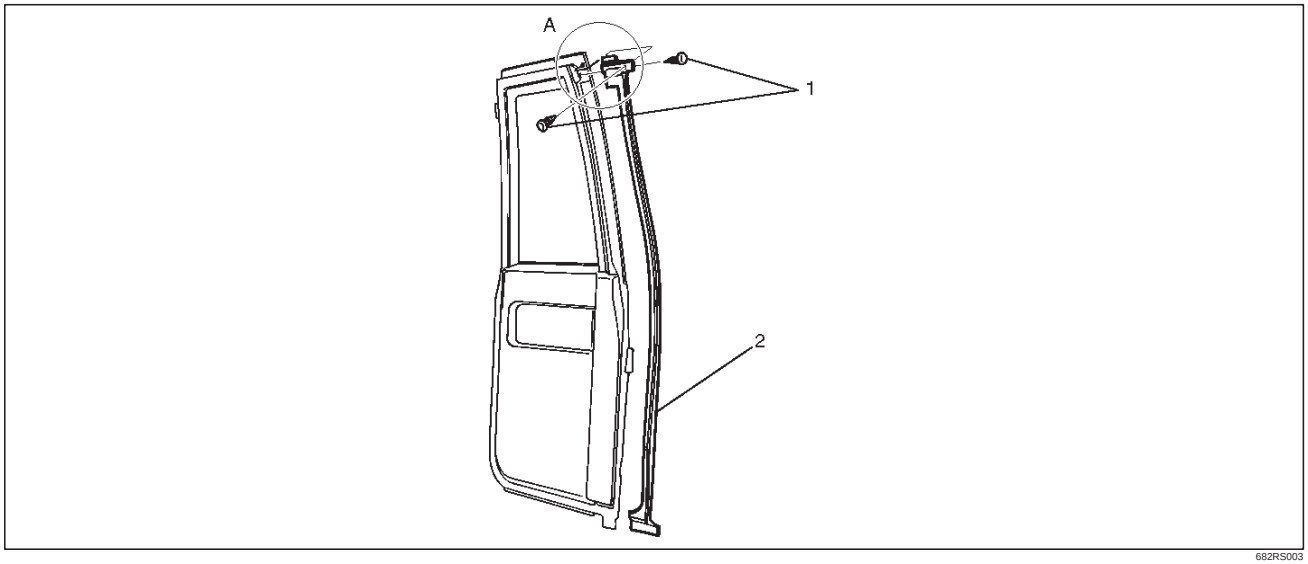

682RS003

Legend

(1) Clip
(2) Tailgate Center Weatherstrip

Removal

1. Remove tailgate center weatherstrip.
   - Remove the fixing clips in order to pull the tailgate center weatherstrip out from the tailgate panel.

Installation

1. Tailgate center weatherstrip (1).
   - Start assembling at the A portion.

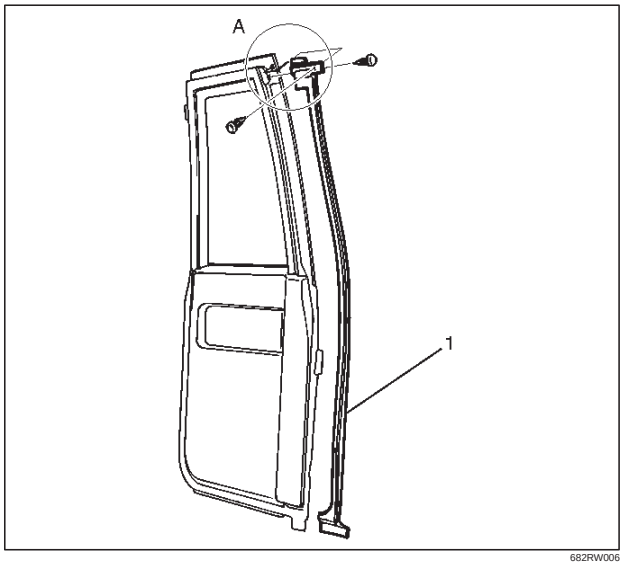

682RW006

- Clean the tailgate center weatherstrip (4) adhesive tape (2) and the butyl seal (3) fitting position of the tailgate panel.
- Affix new adhesive tape and the butyl seal to the weatherstrip (lower side) in order to install the tailgate center weatherstrip to the tailgate panel with no gap between them.

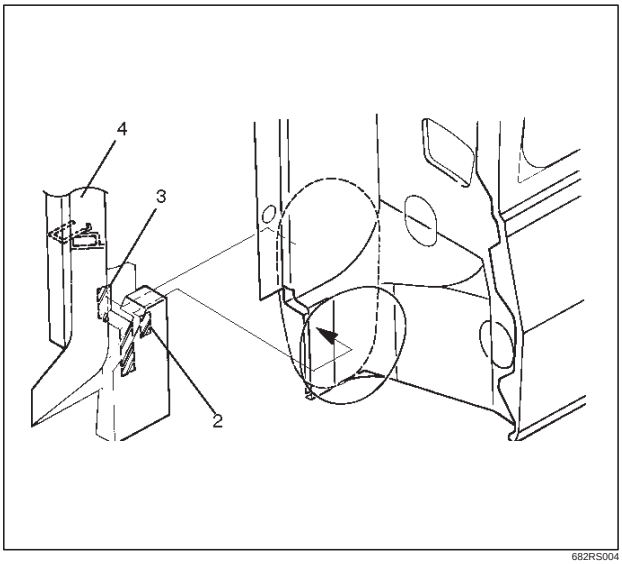

682RS004

Downloaded from www.Manualslib.com manuals search engine

Tailgate Main Weatherstrip

Parts Location

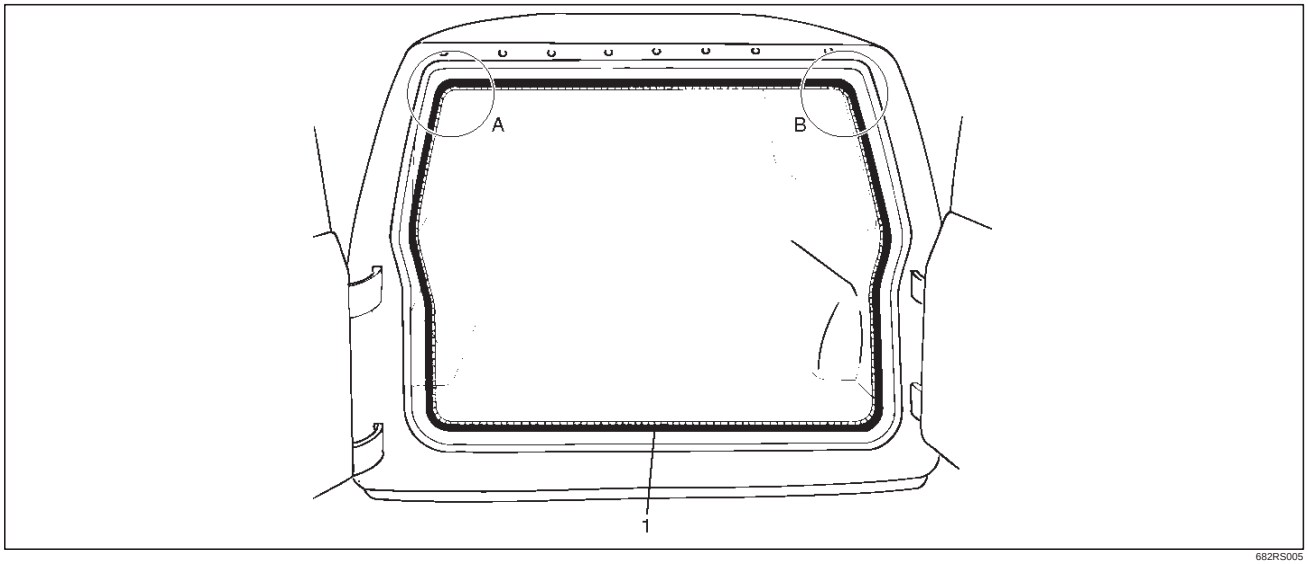

682RS005

Legend

(1) Tailgate Main Weatherstrip

Removal

1. Remove tailgate main weatherstrip.
   - Pull the tailgate main weatherstrip out from the body panel.

Installation

1. Tailgate main weatherstrip.
   - Align the A and B positions to the corners of the body panel. Install the tailgate main weatherstrip to the body panel by gently tapping with a plastic hammer. There should be not clearance between the body panel the tailgate main weatherstrip.

Downloaded from www.Manualslib.com manuals search engine

Spare Tire Carrier

Parts Location

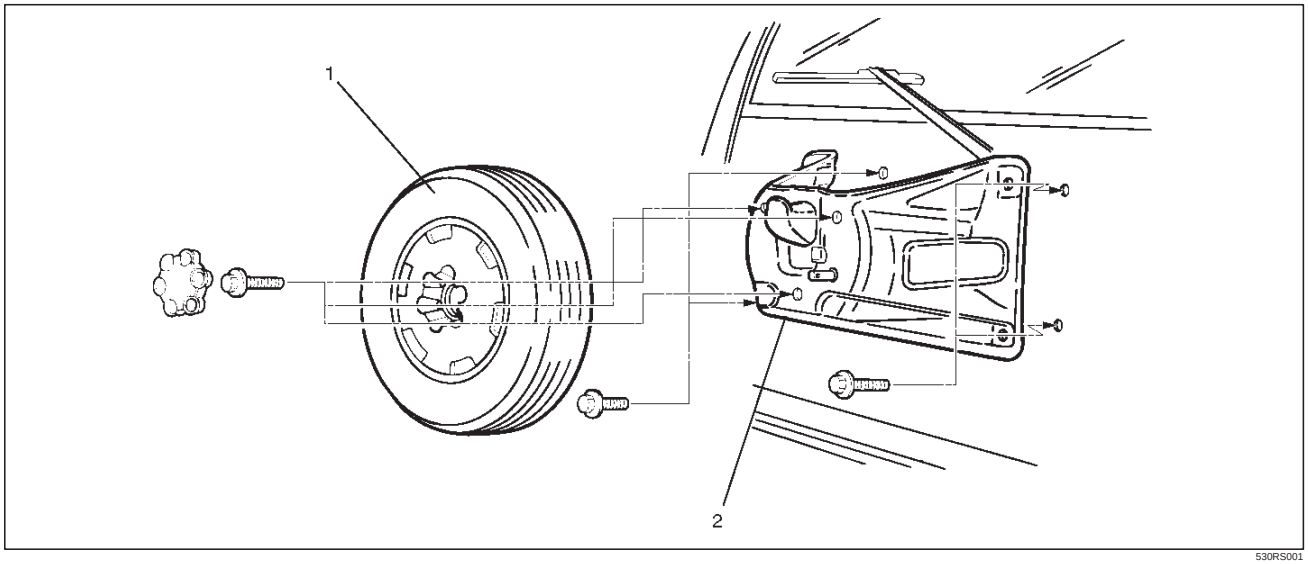

530RS001

Legend

(1) Spare Tire
(2) Spare Tire Carrier

Removal

1. Remove spare tire.
2. Remove spare tire carrier by using spare tire carrier nut wrench J–34355.

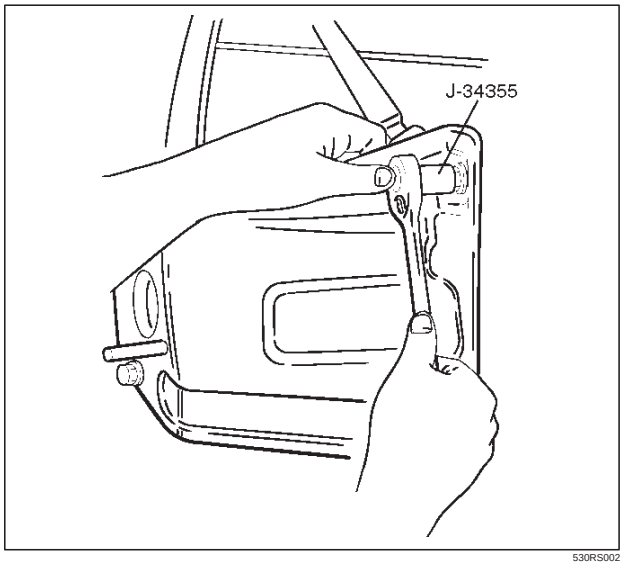

530RS002

Installation

1. Install the spare tire carrier.
   - Tighten the carrier fixing bolts to the specified torque.

   Torque : 31 N•m (23 lb ft)
2. Install the spare tire.
   - Tighten the spare tire fixing bolts to the specified torque.

   Torque : 118 N•m (87 lb ft)

Downloaded from www.Manualslib.com manuals search engine

Headlining

Parts Location

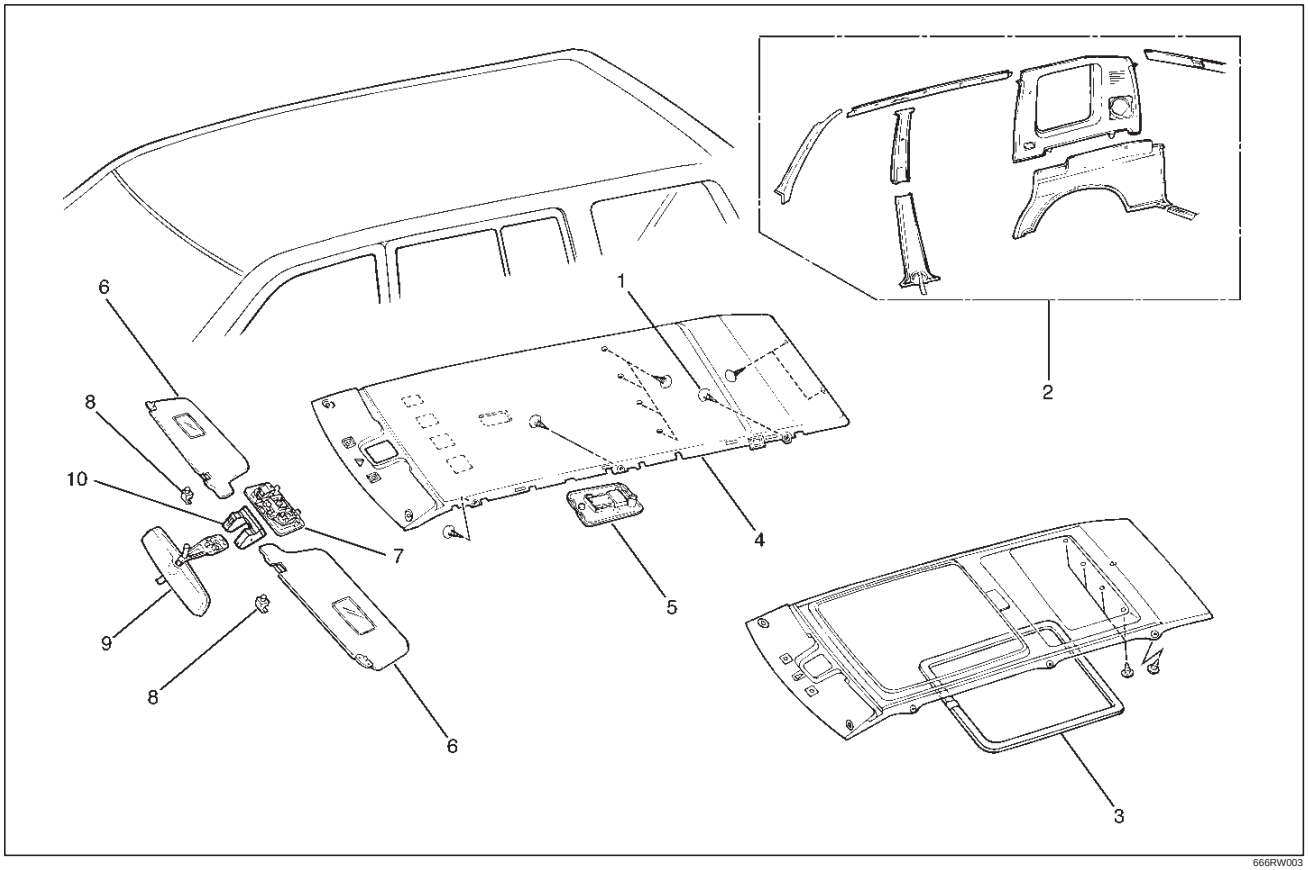

666RW003

Legend

(1) Clip
(2) Interior Trim Panels
(3) Sun Roof Finisher (W/Sun Roof)
(4) Headlining
(5) Dome Light
(6) Sunvisors
(7) Map Light
(8) Sunvisor Holder
(9) Rear View Mirror
(10) Multi Meter

Removal

1. Disconnect the battery ground cable.
2. Remove interior trim panels.
   - Refer to the Exterior / Interior Trim section.
3. Remove dome light.
   - Remove the dome light lens and the fixing screws.
   - Disconnect the dome light connectors.
4. Remove multi meter (4).
   - Remove two caps (2), two screws (3) and disconnect the connector (1).

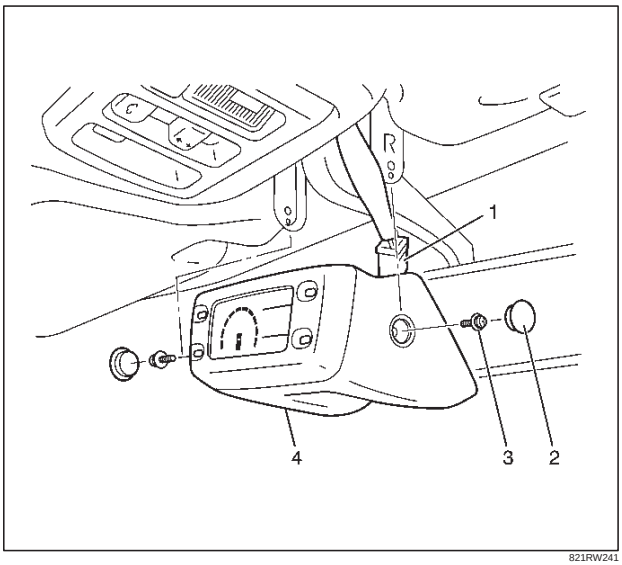

821RW241

Downloaded from www.Manualslib.com manuals search engine

5. Remove rear view mirror.
   - Remove the rubber stopper (1).
   - Pry off the mirror stay cover (2) and remove 3 screws.

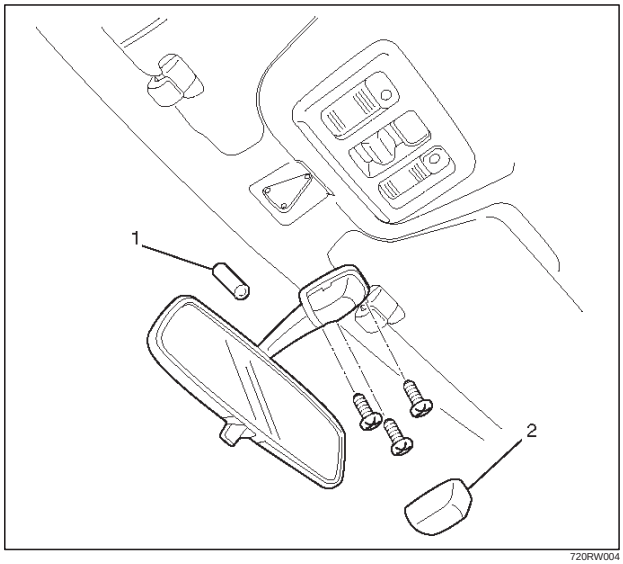

720RW004

6. Remove map light/sun roof switch.
   - Pry the map light clip free from the map light/sun roof switch bracket and disconnect the connector.

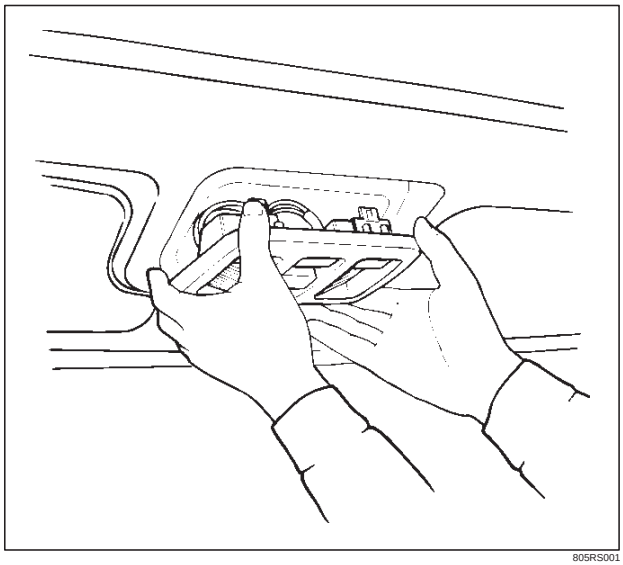

805RS001

7. Remove sunvisors.
   - Remove the fixing screw and turn the sunvisor holder (1) to remove it.
   - Disconnect the vanity mirror illumination connector.

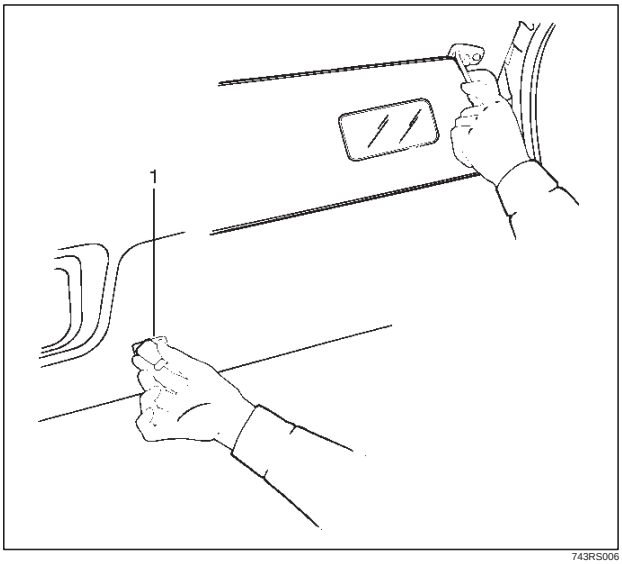

743RS006

8. Remove sun roof finisher (W/Sun roof).
9. Remove headlining.
   - Remove the headlining fixing clips.

Installation

To install, follow the removal steps in the reverse order, noting the following points.

1. Install the headlining so that the fixing clips will not come off.
2. To install the sun roof finisher (3), first fit in at one place with the head lining (2) close to the sun roof frame complete (1), then install the entire finisher tightly by hitting it with a plastic hammer, not allowing it to move up.

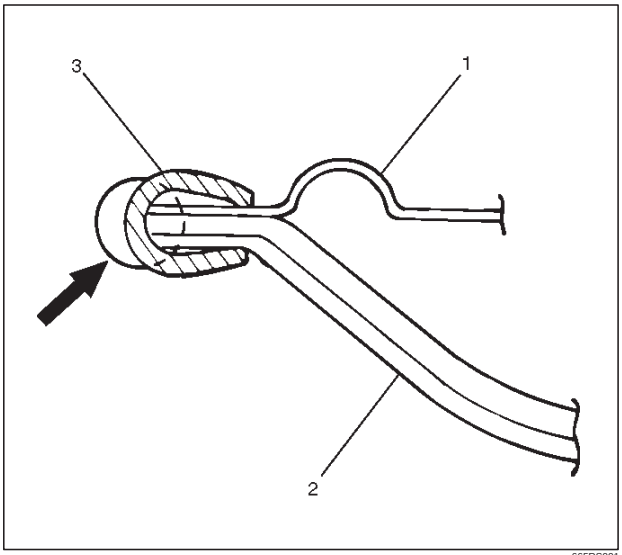

665RS001

Downloaded from www.Manualslib.com manuals search engine

Rear Air Deflector

Parts Location

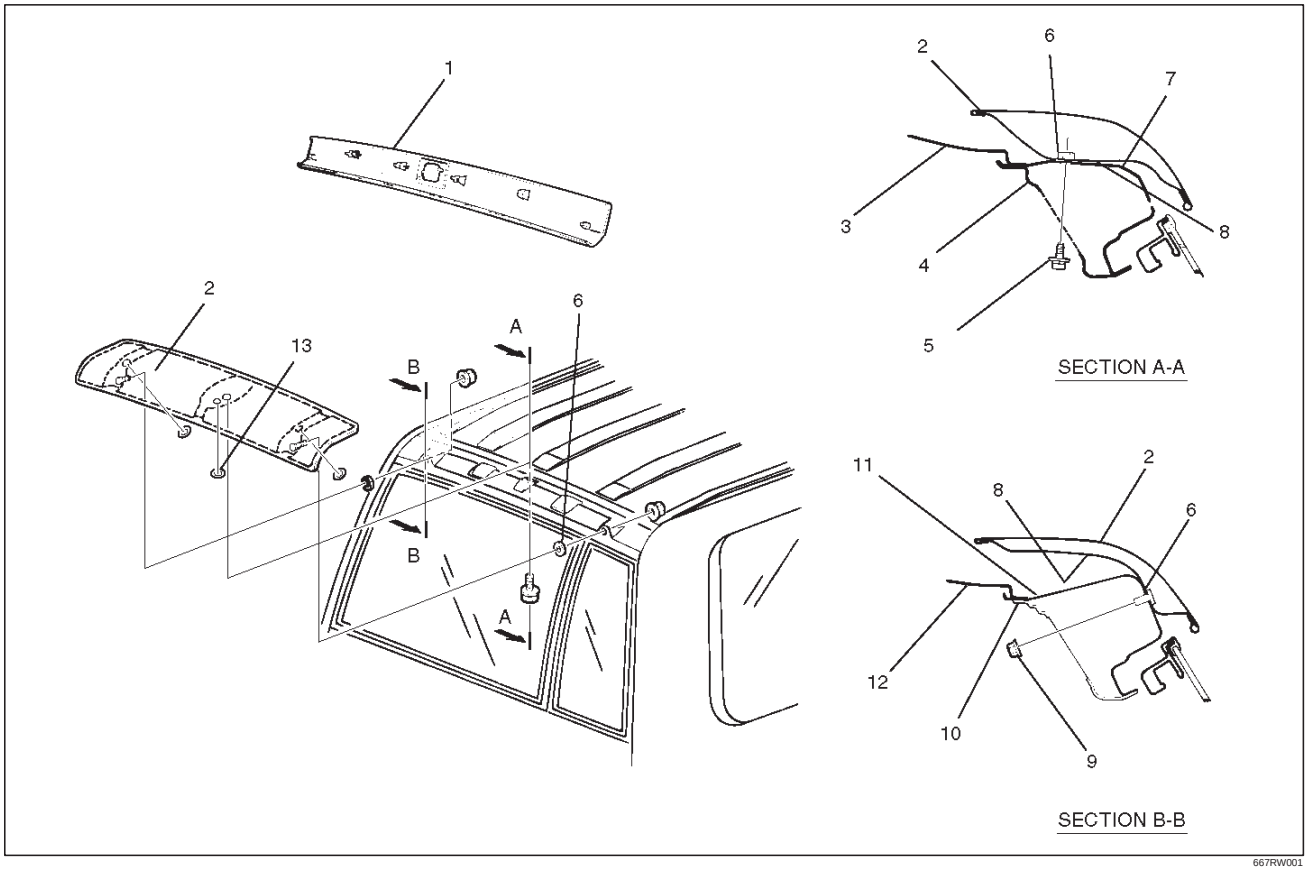

667RW001

Legend

(1) Rear Roof Trim Cover
(2) Rear Air Deflector
(3) Roof Rail
(4) Rear Inner Roof Rail
(5) Fixing Bolt
(6) Nylon Washer
(7) Rear Outer Roof Panel
(8) Seal
(9) Fixing Nut
(10) Rear Pillar Upper Reinforcement
(11) Rear Outer Roof Rail
(12) Roof Panel
(13) Grommet

Removal

1. Disconnect the battery ground cable
2. Remove rear roof trim cover.
   - Refer to Luggage Side and Quarter Upper Trim Cover in Exterior / Interior Trim section.
3. Remove rear air deflector.
   - Take notice of the grommet and the nylon washer.

Installation

To install, follow the removal steps in the reverse order, noting the following points.

Downloaded from www.Manualslib.com manuals search engine

1. Install the grommet (1) to the air deflector (2) drain hole.

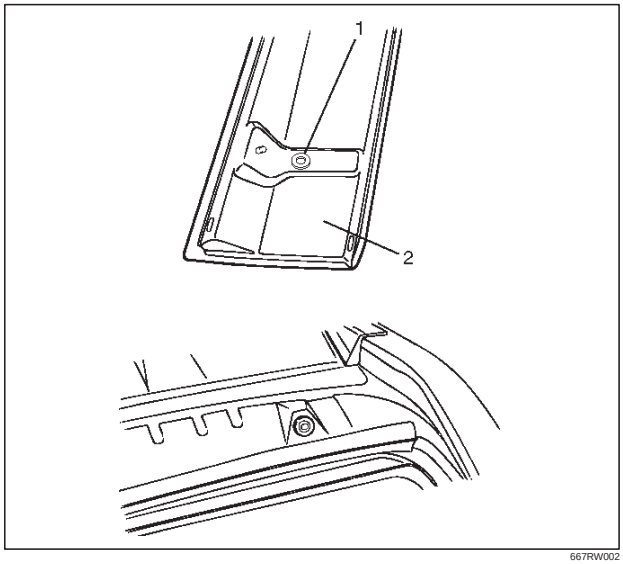

667RW002

2. Use a new nylon washer (4). Peel off the adhesive tape of the washer to install the nylon washer to the air deflector (3).

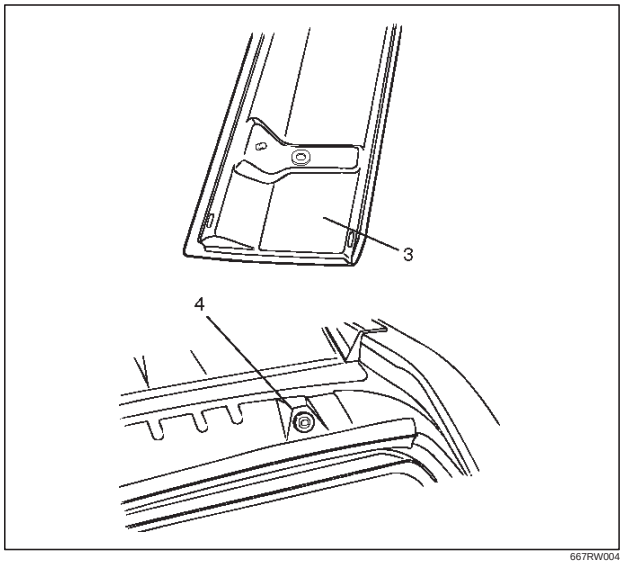

667RW004

3. Install the air deflector (2) to the roof by referring to the specified values shown in the illustration.

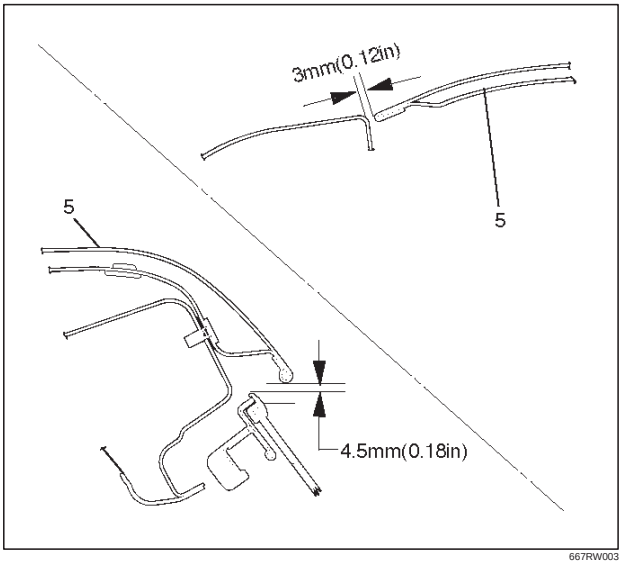

667RW003

4. Tighten the deflector fixing to the specified torque.

Bolt Torque : 6 N•m (52 lb in)

Nut Torque : 8 N•m (69 lb in)

Downloaded from www.Manualslib.com manuals search engine

Roof Moulding

Parts Location

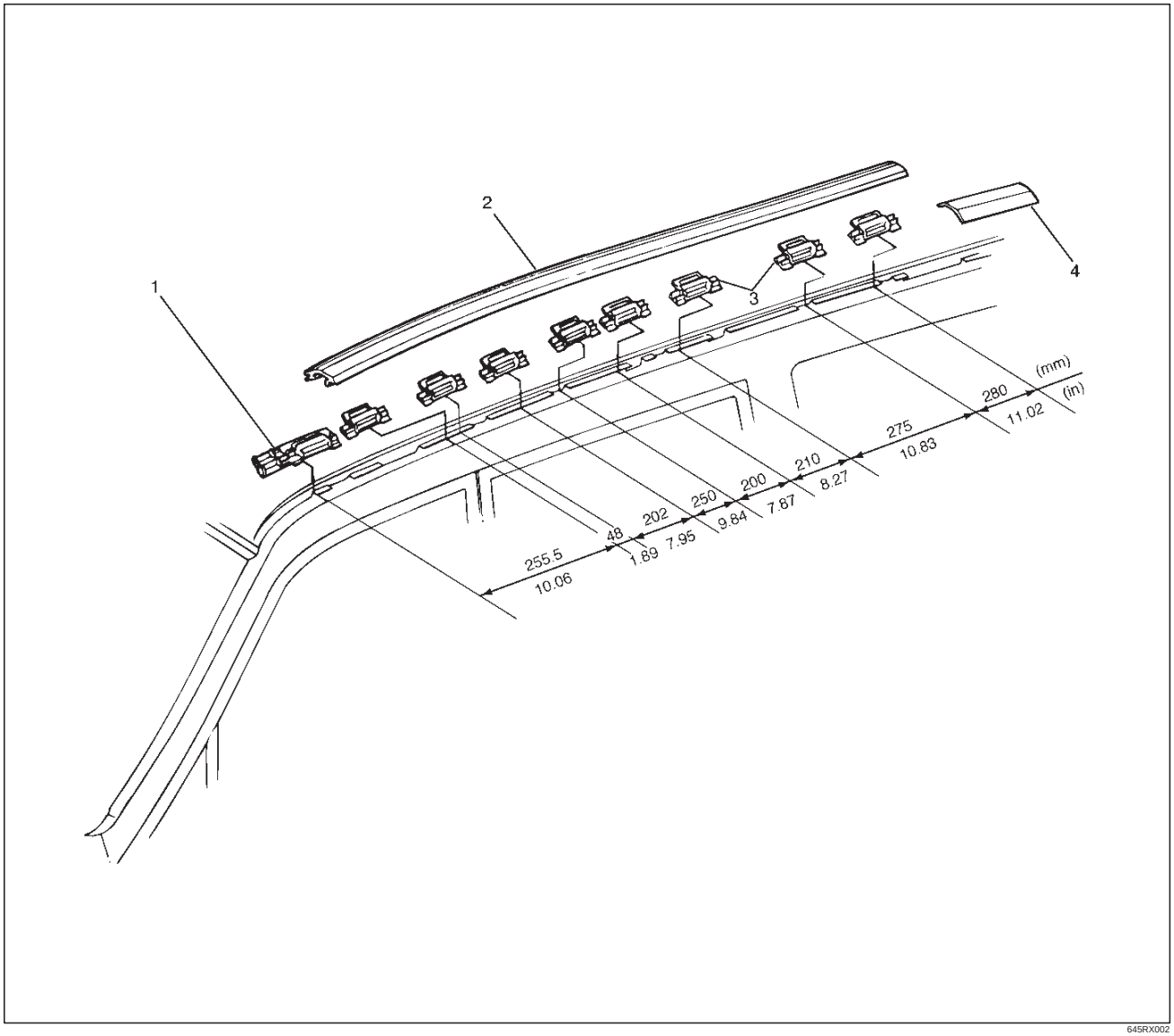

Legend

(1) Windshield Side Moulding Upper Clip
(2) Roof Moulding
(3) Roof Moulding Clip
(4) Roof End Moulding

Removal

1. Disconnect the battery ground cable.
2. Remove roof moulding.
3. Remove roof end moulding.
   - Remove the sealing adhesive and the adhesive tape of the roof end moulding from the panel using a knife or scraper while you peel them off.
4. Remove roof moulding clip.
   - Remove the clips.

Installation

1. Install the roof moulding clip (1).
   - Install the clips to the specified positions on the roof panel flange (2).

Downloaded from www.Manualslib.com manuals search engine

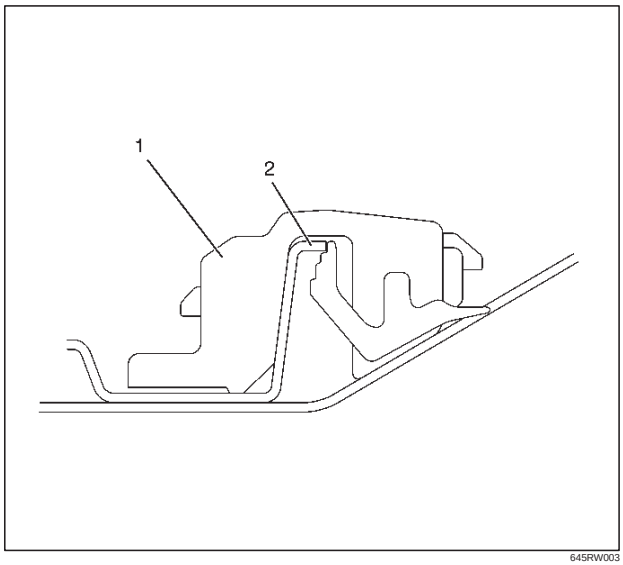

645RW003

2. Install the roof end moulding (3).
   - Clean the body panel where the roof end moulding is installed.
   - Install the roof end moulding and the rear air deflector (2) so that the installation clearance between them is within the specified values. Securely fix it with the adhesive tape (4) and sealing adhesive (5).

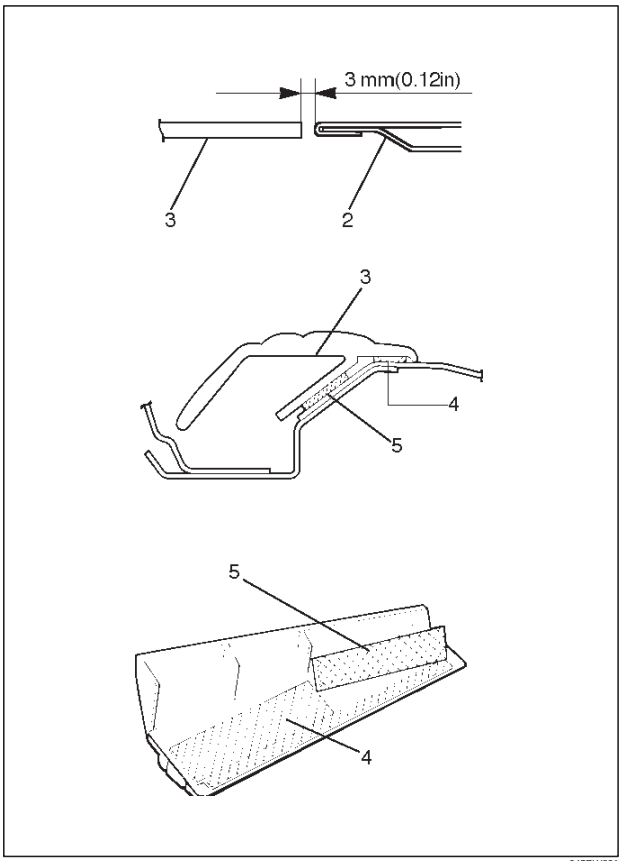

645RW001

3. Install the roof moulding (9).
   - Assemble the windshield side moulding upper clip (8) to the roof panel with the clip positioning rib (6) (oblique lines portion) attached to the roof panel flange (7). Assemble the roof moulding (9) while you attach the front edge portion of the roof molding to the windshield side moulding (10).

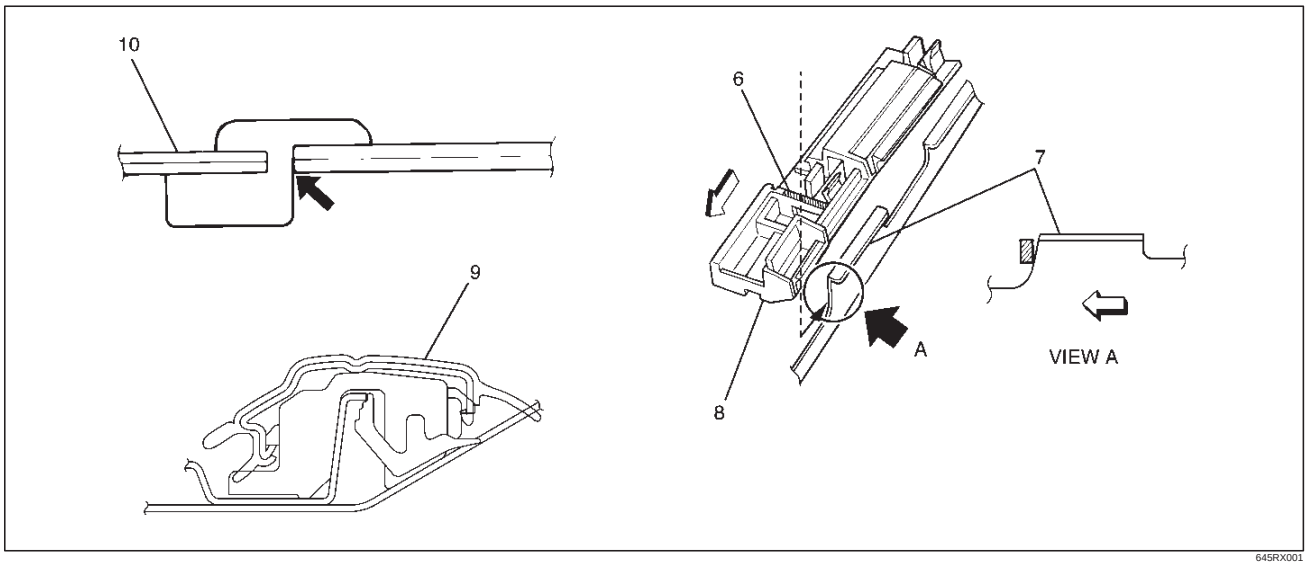

645RX001

Downloaded from www.Manualslib.com manuals search engine

Windshield

Parts Location

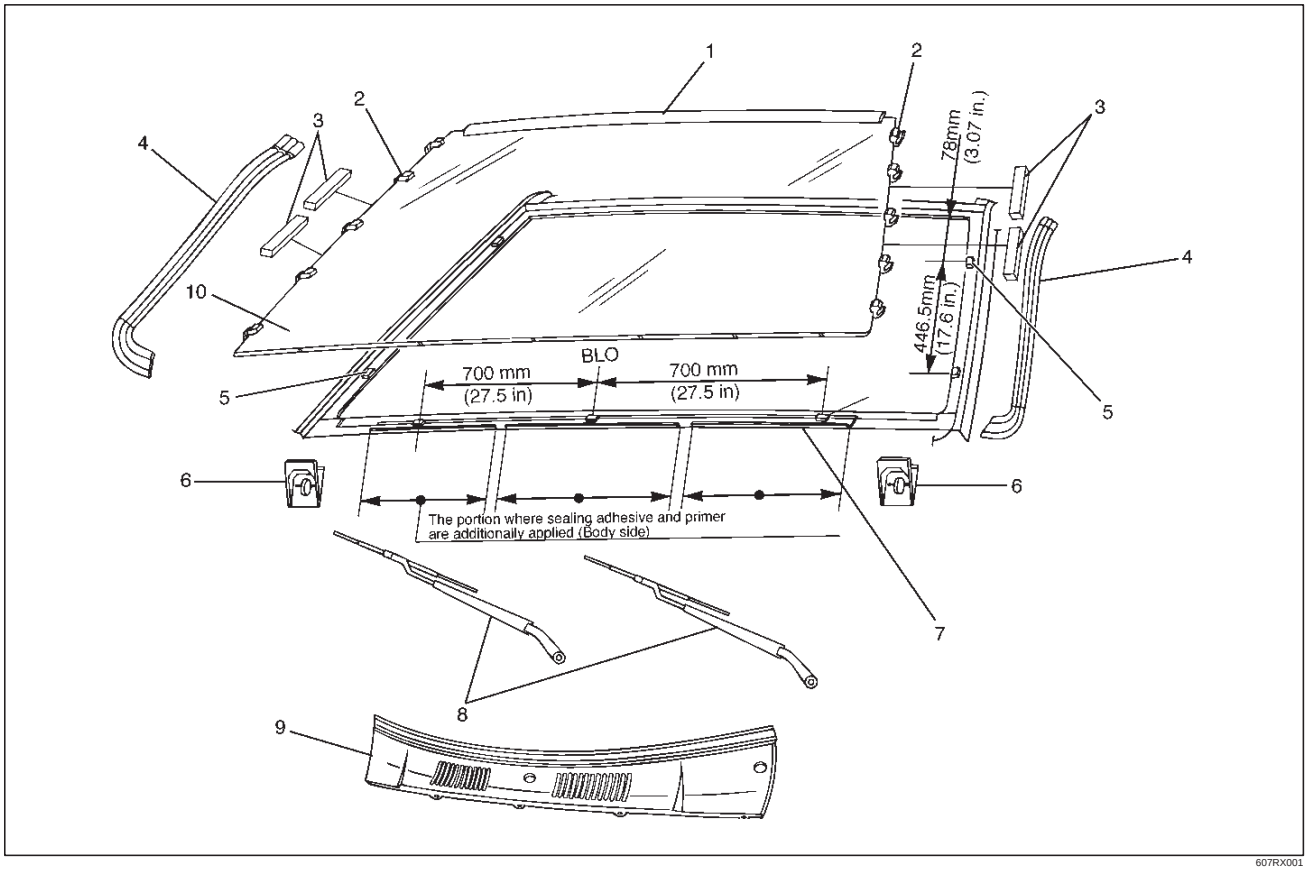

607RX001

Legend

(1) Windshield Upper Moulding
(2) Moulding Clip
(3) Windshield Side Seal
(4) Windshield Side Moulding
(5) Spacer
(6) Windshield Support
(7) Cowl Upper Rail Flange
(8) Windshield Wiper
(9) Front Cowl Cover
(10) Windshield

Removal

1. Disconnect the battery ground cable.
2. Remove windshield wiper.
   - Refer to Windshield Wipper Arm/Blade in Wiper/Washer System section.
3. Remove front cowl cover.
   - Refer to Cowl Cover in this section.
4. Remove windshield side moulding.
   - Pull the moulding out from the windshield side moulding clip.
5. Remove windshield support.
6. Remove windshield side seal.
7. Remove windshield (2).
   - Use a knife or pick to make a hole in part of the adhesive caulking material.

Downloaded from www.Manualslib.com manuals search engine

- Secure one end of a piece of steel piano wire (1) (0.02 inches in diameter) to a piece of wood that can serve as a handle.

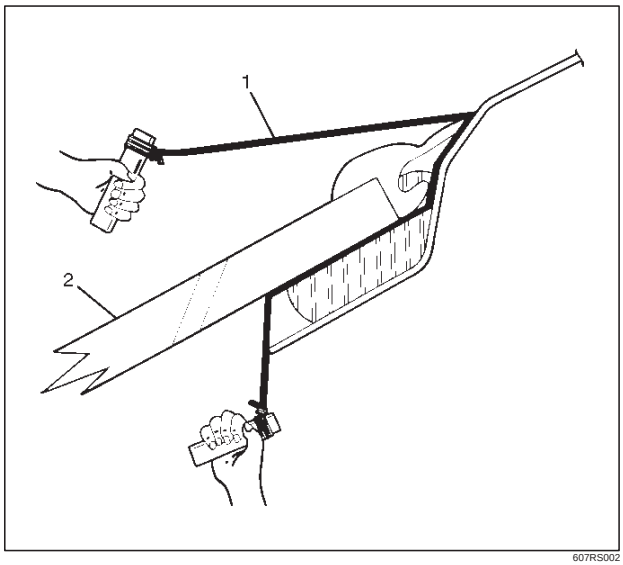

607RS002

- Use a pair of needle nose pliers to insert the other end of the piano wire through the adhesive caulking material at the edge of the windshield glass.
- Secure the other end of the piano wire to another piece of wood.
- With the aid of an assistant, carefully move the piano wire with a sawing motion to cut through the adhesive caulking material around the entire circumference of the windshield glass.
- Clean the remaining adhesive caulking material from the area of the body which holds the windshield.

8. Remove windshield upper moulding.
   - Taking notice of the adhesive tape, and peel the moulding off the windshield upper portion.
9. Remove moulding clip.
10. Remove spacer.

Installation

1. Install the spacer (1).
   - Clean the bonding surfaces of both the windshield and the body panel.
   - When installing the spacers, align the lower side spacer to the R stop of the body panel and the side spacer to the end of the body panel. Be sure to always use a new spacer.

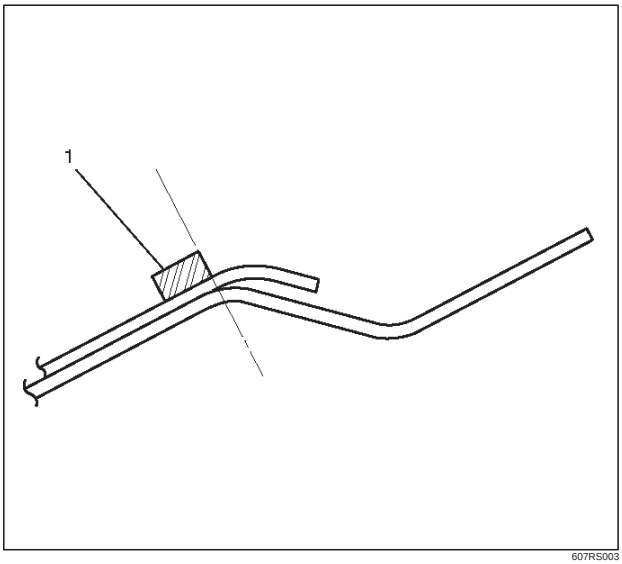

607RS003

   - Be absolutely sure to apply glass primer and body primer to the body panel as shown in the illustration.

Downloaded from www.Manualslib.com manuals search engine

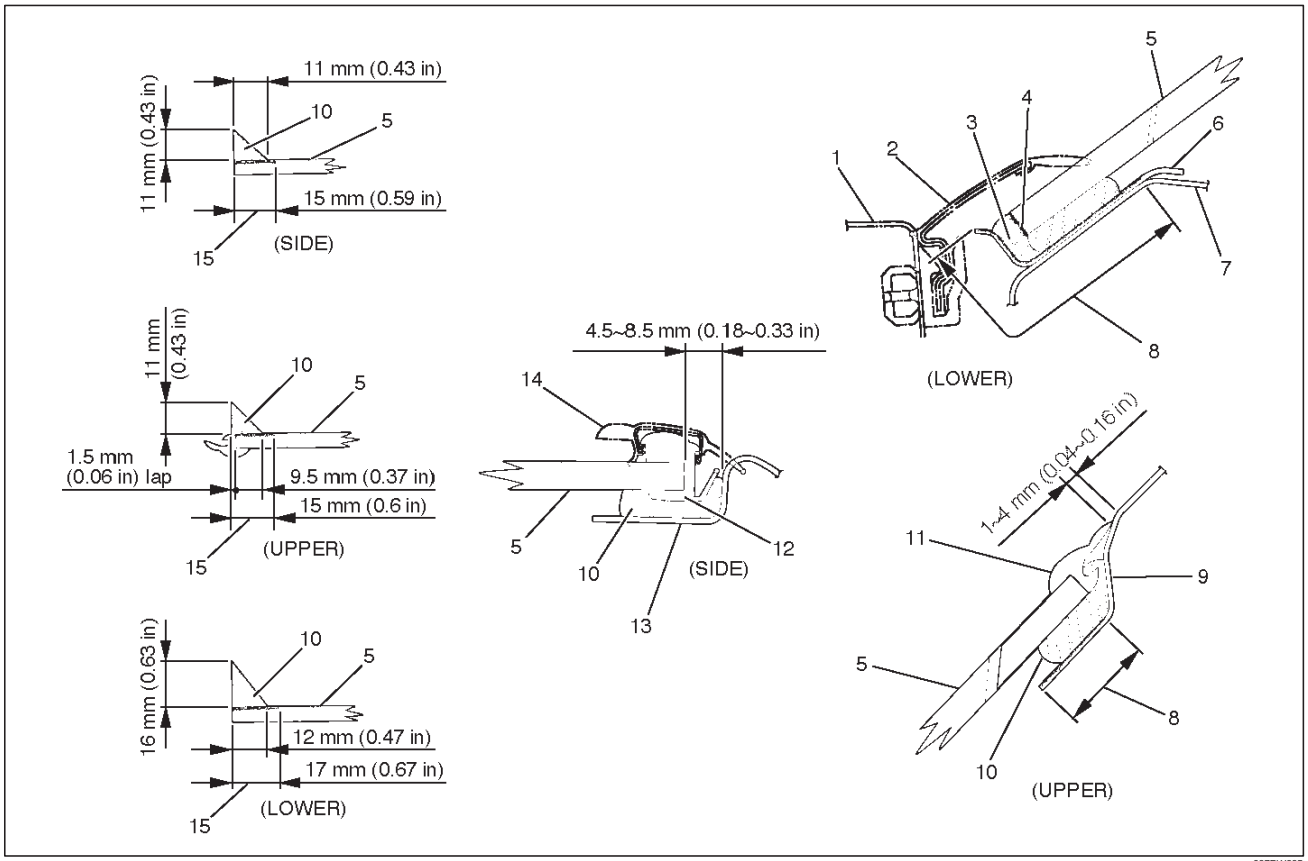

607RW005

Legend

(1) Front Cowl Cover
(2) Windshield Lower Moulding
(3) The portion of the cowl upper rail flange where sealing adhesive is additionally filled
(4) Apply primer to the glass and portion where sealing adhesive is additionally filled
(5) Windshield
(6) Cowl Upper Rail
(7) Cowl Upper Panel
(8) Body Primer
(9) Roof Panel
(10) Sealing Adhesive
(11) Windshield Upper Moulding
(12) Moulding Clip
(13) Front Pillar Outer Panel
(14) Windshield Side Moulding
(15) Sealing Adhesive

2. Install the moulding clip (2).
   - Install new moulding clips to the fixed position of the windshield (3).
   - Always use new moulding clips (4).

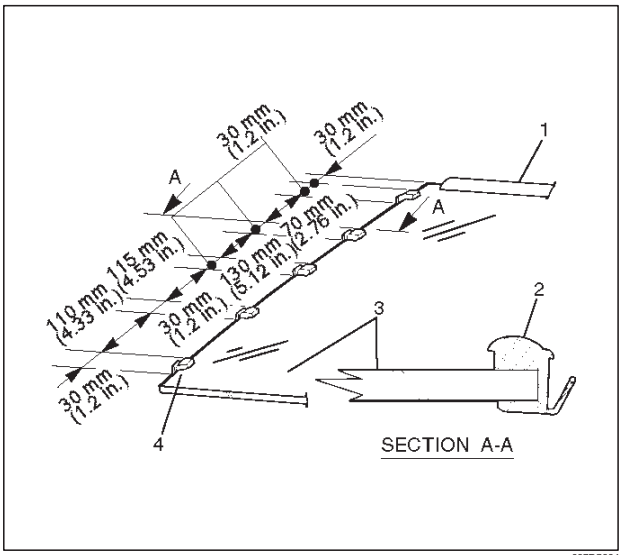

607RS004

Downloaded from www.Manualslib.com manuals search engine

3. Install the windshield upper moulding (1).
   - Peel off the adhesive tape (2) and install the moulding to the fixed position of the windshield (3).
   - Always use new upper moulding (1).

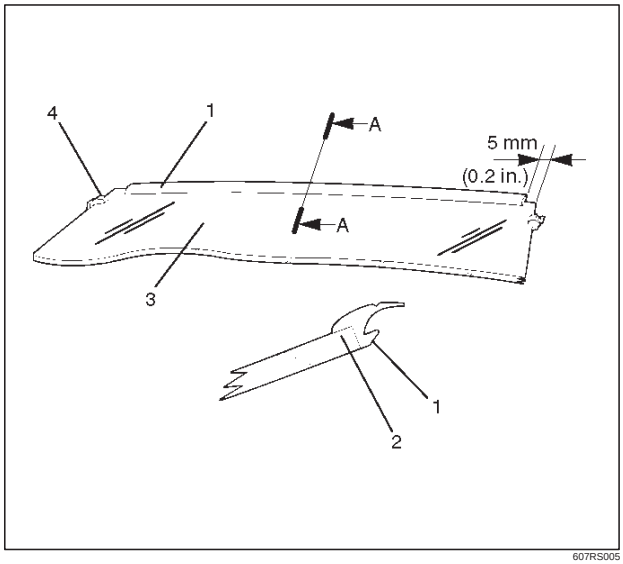

607RS005

4. Install the windshield.

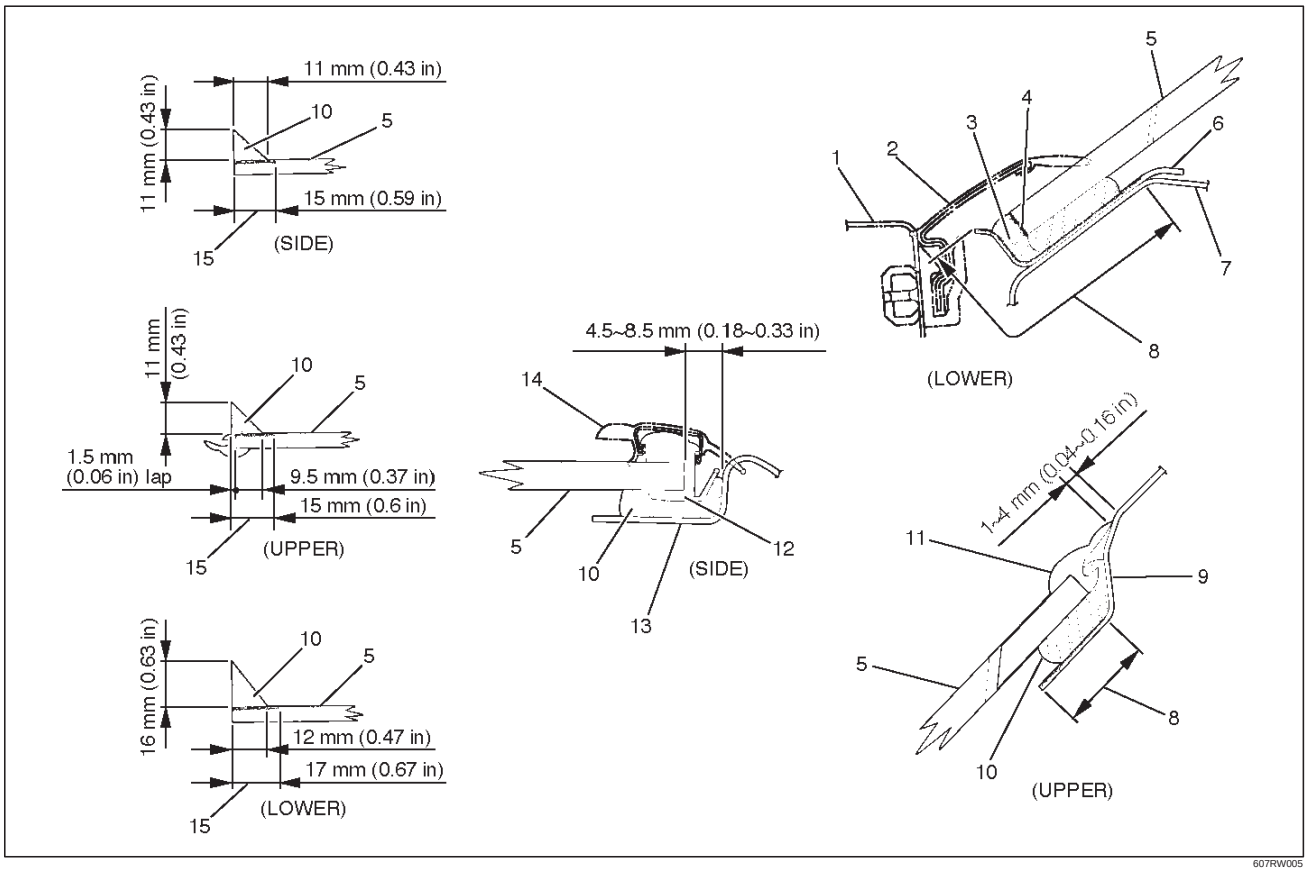

607RW005

Downloaded from www.Manualslib.com manuals search engine

Legend

(1) Front Cowl Cover
(2) Windshield Lower Moulding
(3) The portion of the cowl upper rail flange where sealing adhesive is additionally filled
(4) Apply primer to the glass and portion where sealing adhesive is additionally filled
(5) Windshield
(6) Cowl Upper Rail
(7) Cowl Upper Panel
(8) Body Primer
(9) Roof Panel
(10) Sealing Adhesive
(11) Windshield Upper Moulding
(12) Moulding Clip
(13) Front Pillar Outer Panel
(14) Windshield Side Moulding
(15) Sealing Adhesive

5. Install the windshield side seal.
6. Install the windshield support (2).

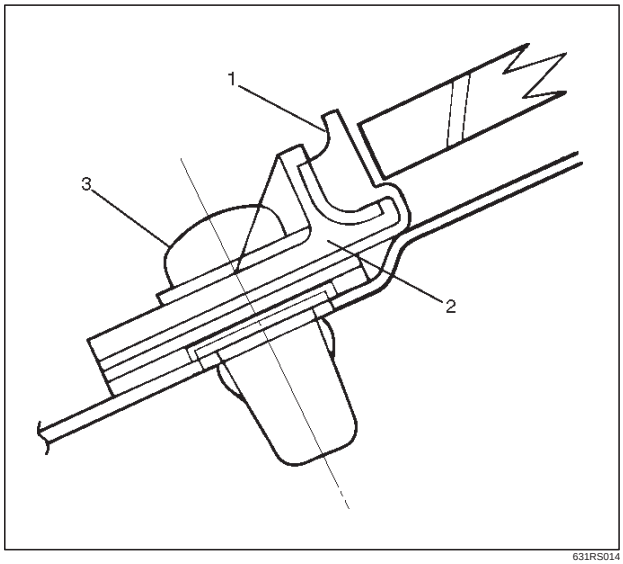

631RS014

- Apply a sealing adhesive (4) to the circumference of the windshield (5).
- Apply the sealing adhesive to the frange portion of the cowl upper rail.
- Adjust the gap clearance of the windshield (5).
- Install the windshield to the body panel by applying pressure to the windshield.
- Cure the adhesive at a temperature of 20~30˚C (68~86˚F) for 24 hours.
- Check that the windshield does not leak water.

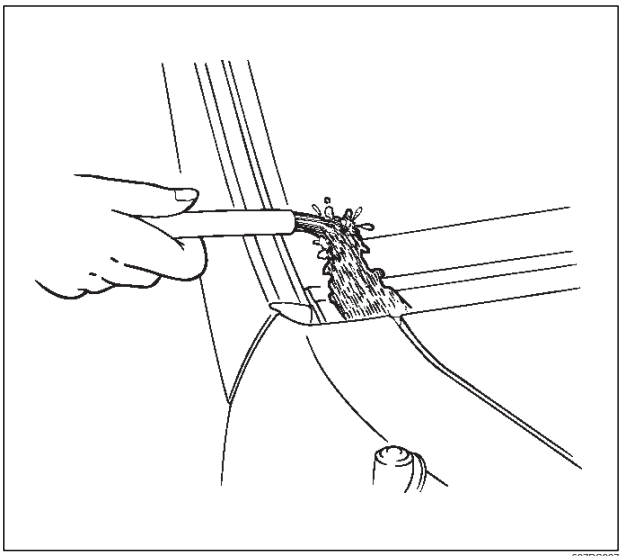
607RS007

7. Install the windshield side moulding.
   - Insert the windshield (5) side moulding (1) into the moulding clip (2).

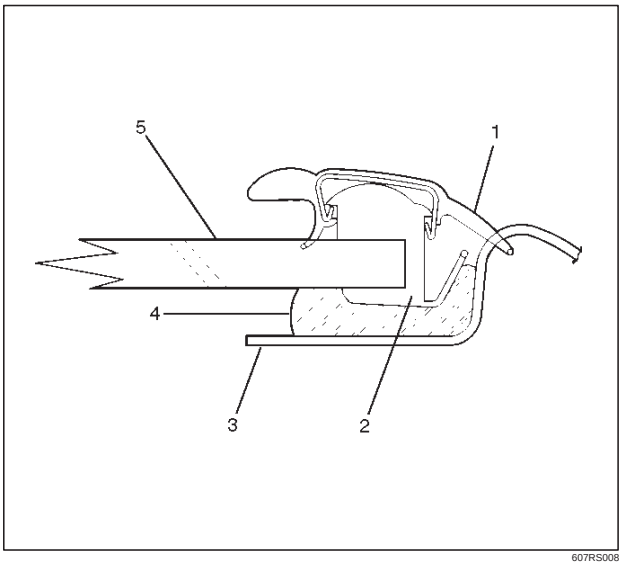

607RS008

   - Take care not to damage the side moulding when you install it.
8. Install the front cowl cover.
9. Install the windshield wiper.

Downloaded from www.Manualslib.com manuals search engine

Rear Quarter Side Glass

Parts Location

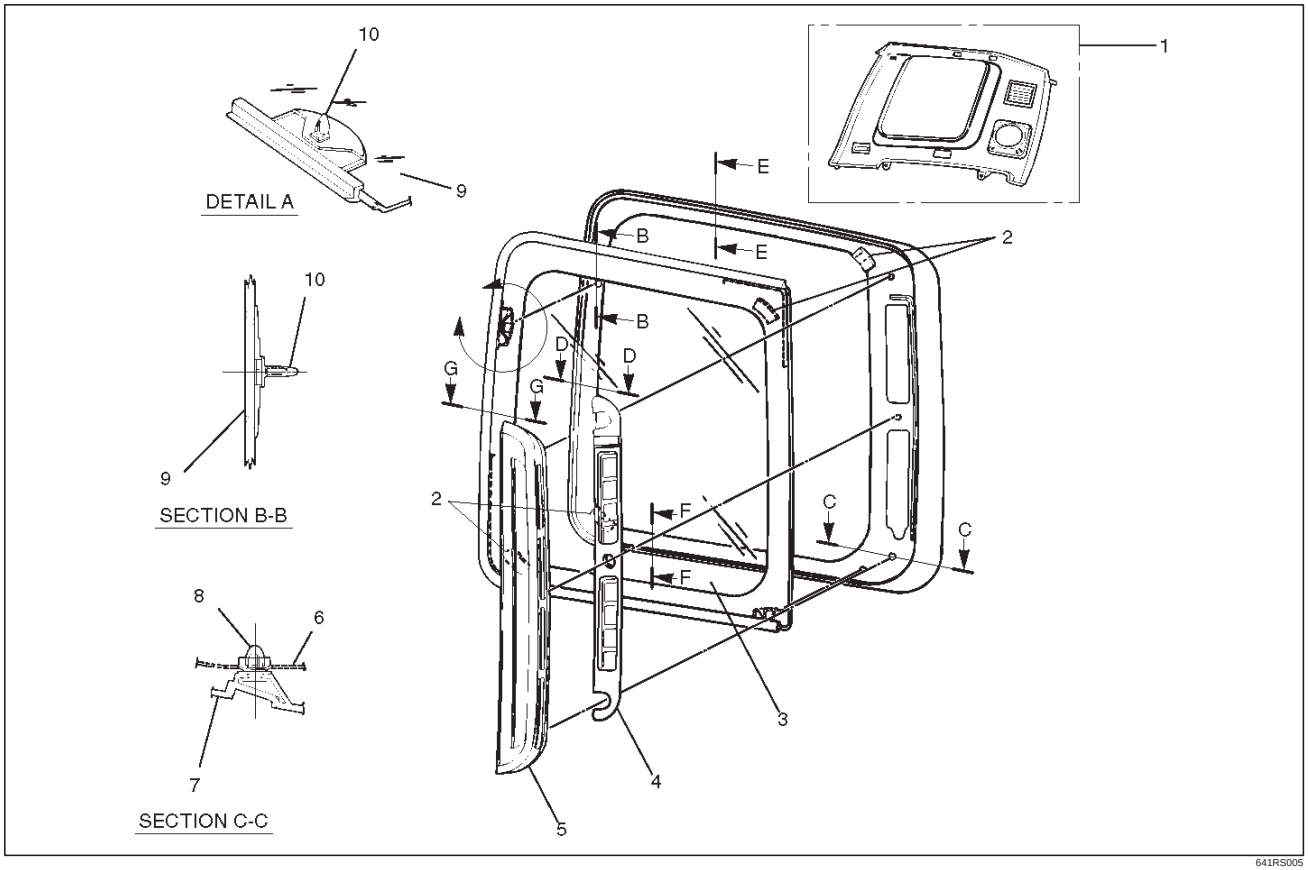

641RS005

Legend

(1) Rear Quarter Upper Trim Panel
(2) Fastener
(3) Rear Quarter Side Glass
(4) Valve Assembly
(5) Ventilation Assembly
(6) Side Outer Panel
(7) Ventilation Assembly
(8) Ventilation Fixing Clip
(9) Rear Quarter Side

Removal

1. Disconnect the battery ground cable.
2. Remove rear quarter upper trim panel.
   - Refer to Laggage Side and Quarter Upper Trim Cover in Exterior / Interior Trim section.
3. Remove ventilation assembly.
4. Remove valve assembly.
   - Refer to Ventilation Assembly in this section.
5. Remove rear quarter side glass.
   - Refer to windshield in this section.

Installation

1. Install the rear quarter side glass.

- Clean the bonding surfaces of both the glass and the body panel.
- Install the fasteners (1) to the fixed positions of the glass and the body panel.

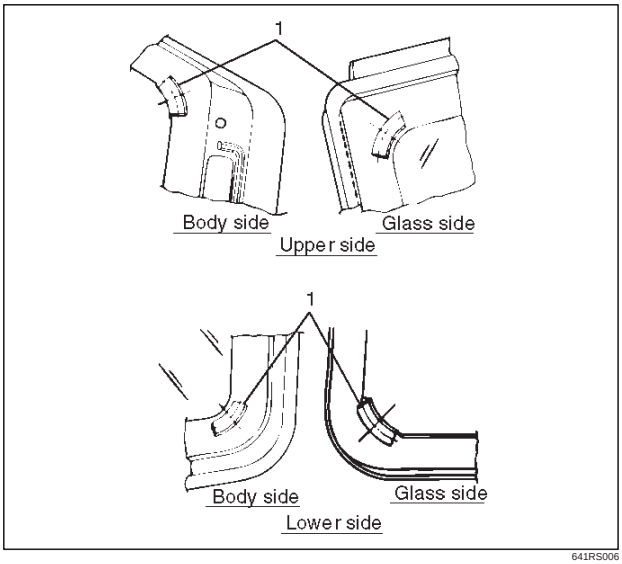

641RS006

- Always use new fasteners.

Downloaded from www.Manualslib.com manuals search engine

- Be absolutely sure to apply glass primer to the side glass.

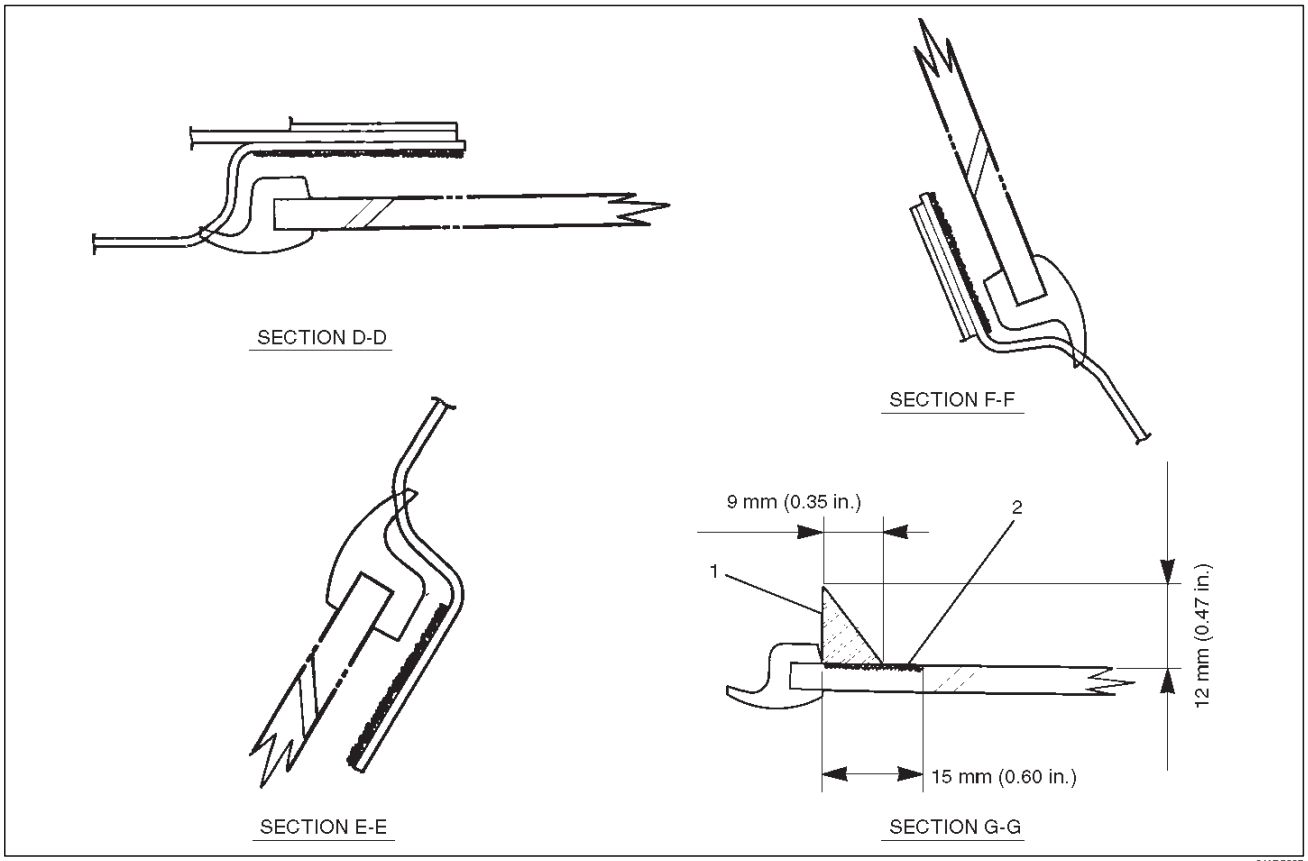

641RS007

- Apply a sealing adhesive (1) to the glass circumference.

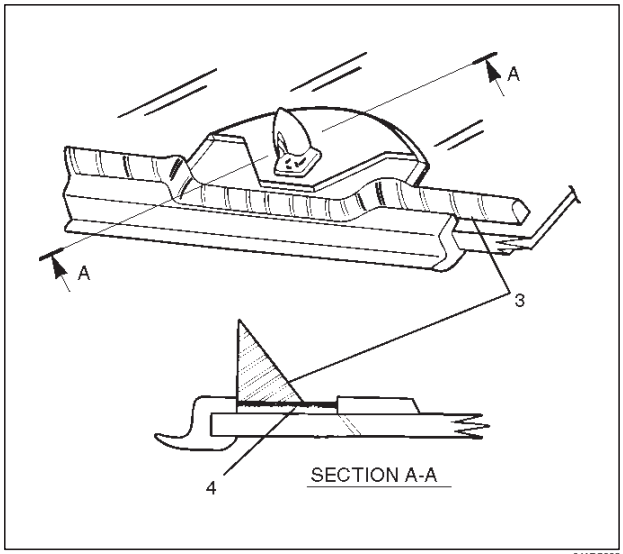

641RS008

- Apply PVC primer (4) to the A clip portion.
- Insert the fixing clip on the side glass into the body panel.
- Push the side glass against the body panel and bond them.
- Cure the adhesive at a temperature of 20~30˚C (68~86˚F) for 24 hours.
- Check that the rear quarter side glass does not leak water.

2. Install the valve assembly.
3. Install the ventilation assembly.
4. Install the rear quarter upper trim panel.

Downloaded from www.Manualslib.com manuals search engine

Tailgate Glass

Parts Location

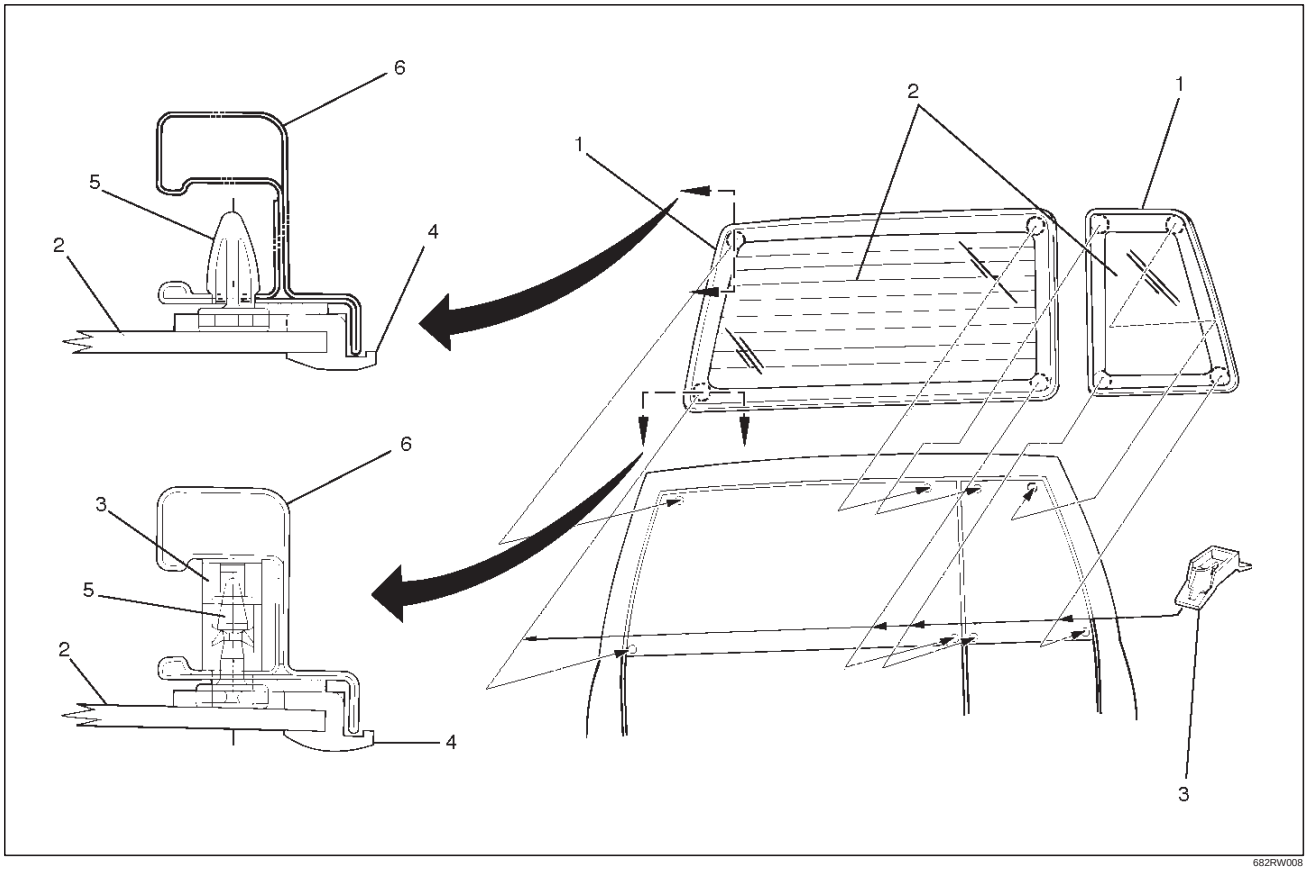

682RW008

Legend

(1) Tailgate Glass Moulding
(2) Tailgate Glass
(3) Tailgate Glass Clip
(4) Glass Moulding
(5) Clip
(6) Body Panel

Removal

1. Remove battery ground cable.
2. Remove tailgate trim panel.
3. Remove tailgate sash trim cover (RH only).
4. Remove the tailgate frame cover.
   - Refer to Tailgate Frame Cover (RH & LH) in this section
5. Remove tailgate glass.
   - Refer to Windshield in this section.

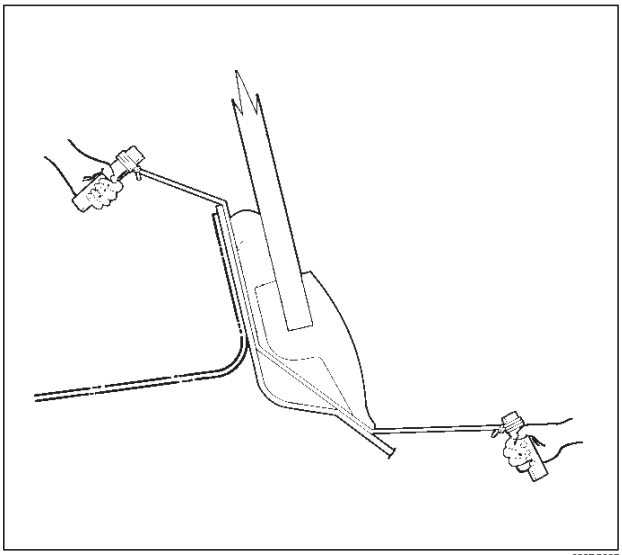

682RS007

6. Remove tailgate glass clip.

Downloaded from www.Manualslib.com manuals search engine

Installation

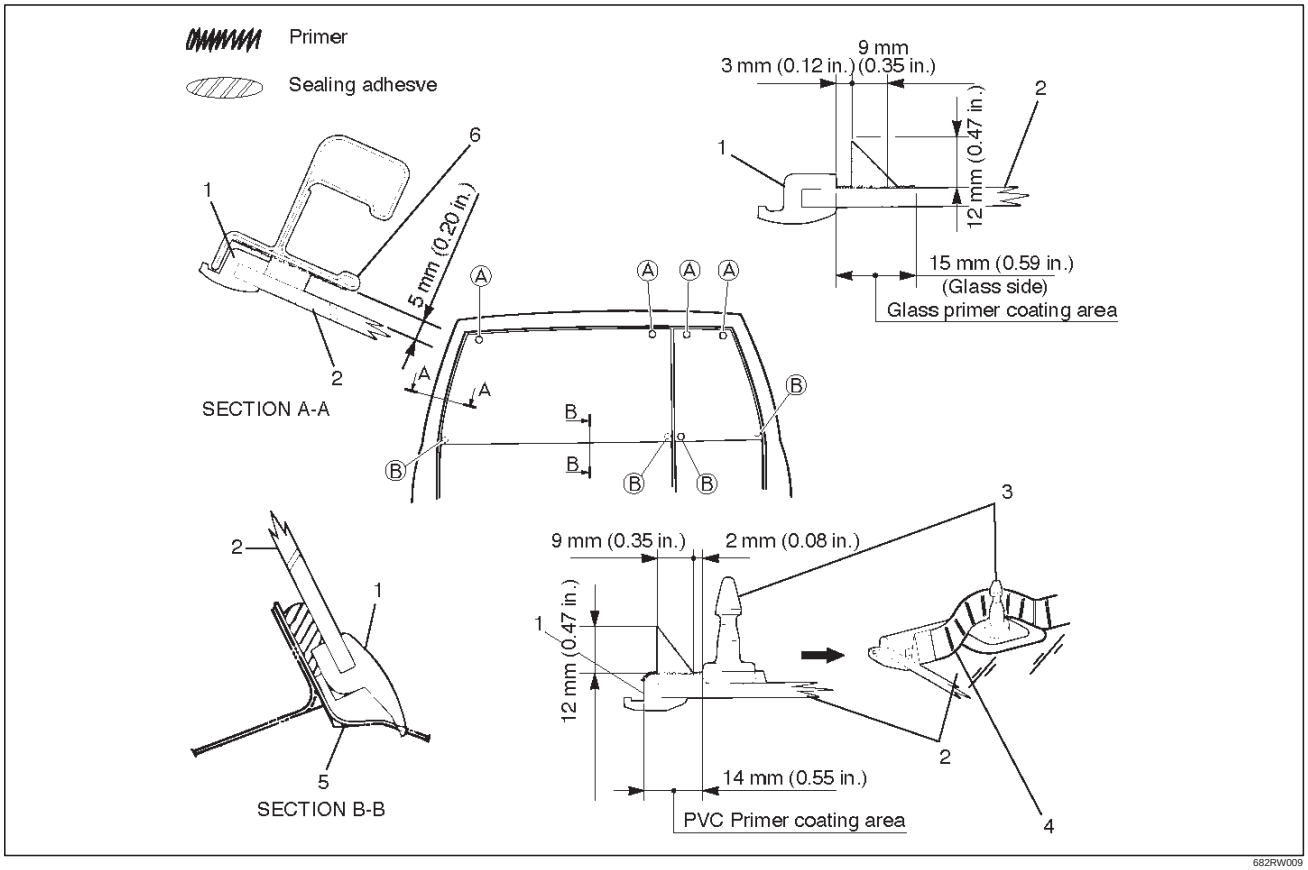

Legend

(1) Glass Moulding
(2) Tailgate Glass
(3) Clip
(4) Sealing Adhesive
(5) Body Panel
(6) Tailgate Frame

1. Install the tailgate glass clip.

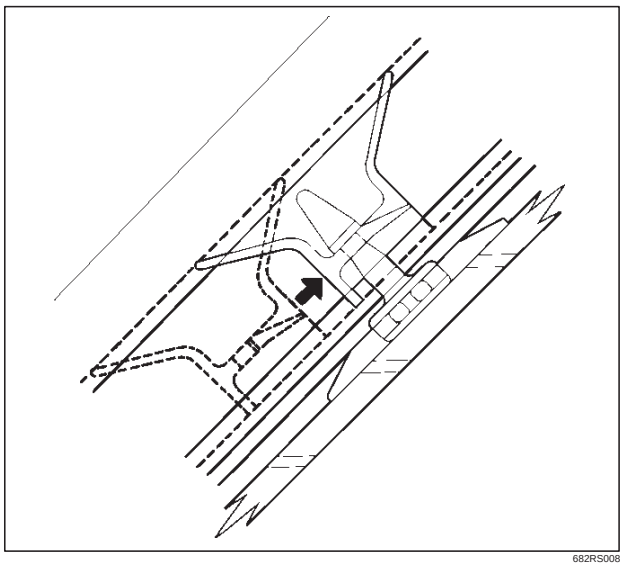

2. Install the tailgate glass (2).
   - Clean the bonding surfaces of both the tailgate glass and the tailgate panel.
   - Be absolutely sure to apply glass primer to the tailgate glass and PCV primer to the glass moulding (1).
   - Apply a sealing adhesive to the circumference of the tailgate glass as shown.
   - Insert the clip of the tailgate glass A portion into the tailgate panel hole to position the glass.
   - Install the new tailgate glass clip to the clip of the tailgate glass B portion while sliding it, and bond the glass to the tailgate panel by applying pressure.
     Always use new tailgate glass clips.
   - Cure the bonding at a temperature of 20~30˚C (68~86˚F) for 24 hours.
   - Check that the tailgate glass does not leak water.

Downloaded from www.Manualslib.com manuals search engine

Main Data and Specifications

Torque Specifications

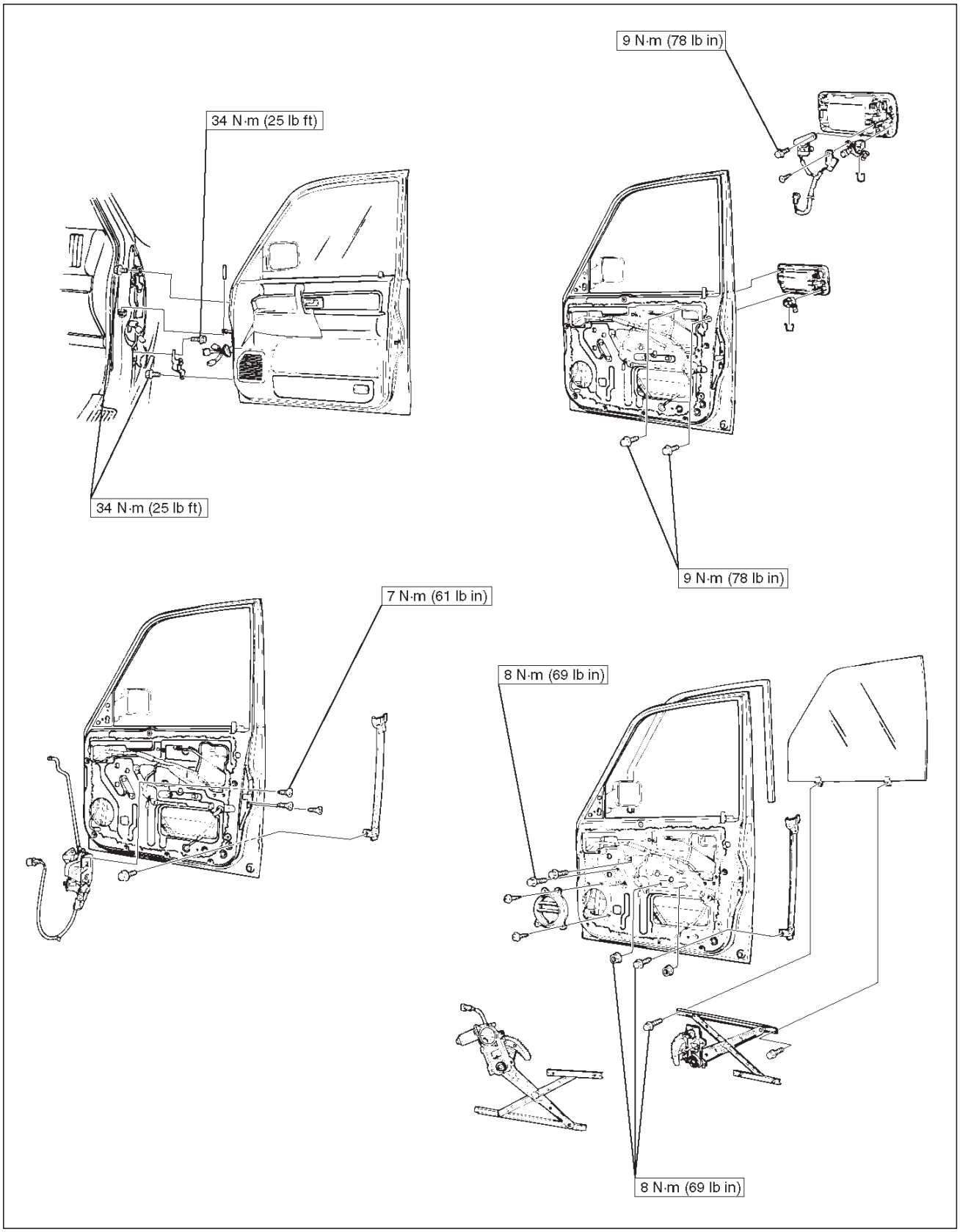

E10RW001

Downloaded from www.Manualslib.com manuals search engine

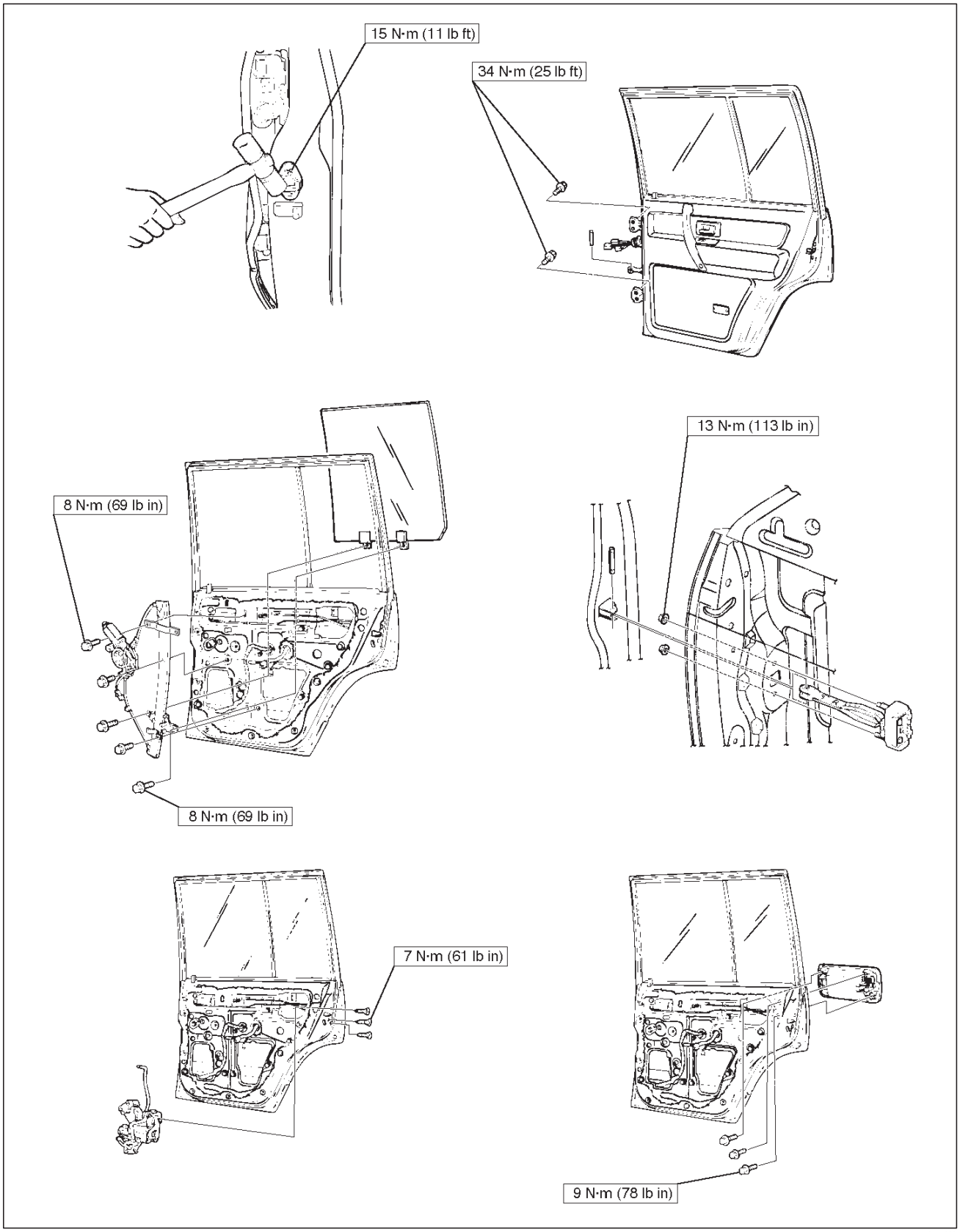

E10RW002

Downloaded from www.Manualslib.com manuals search engine

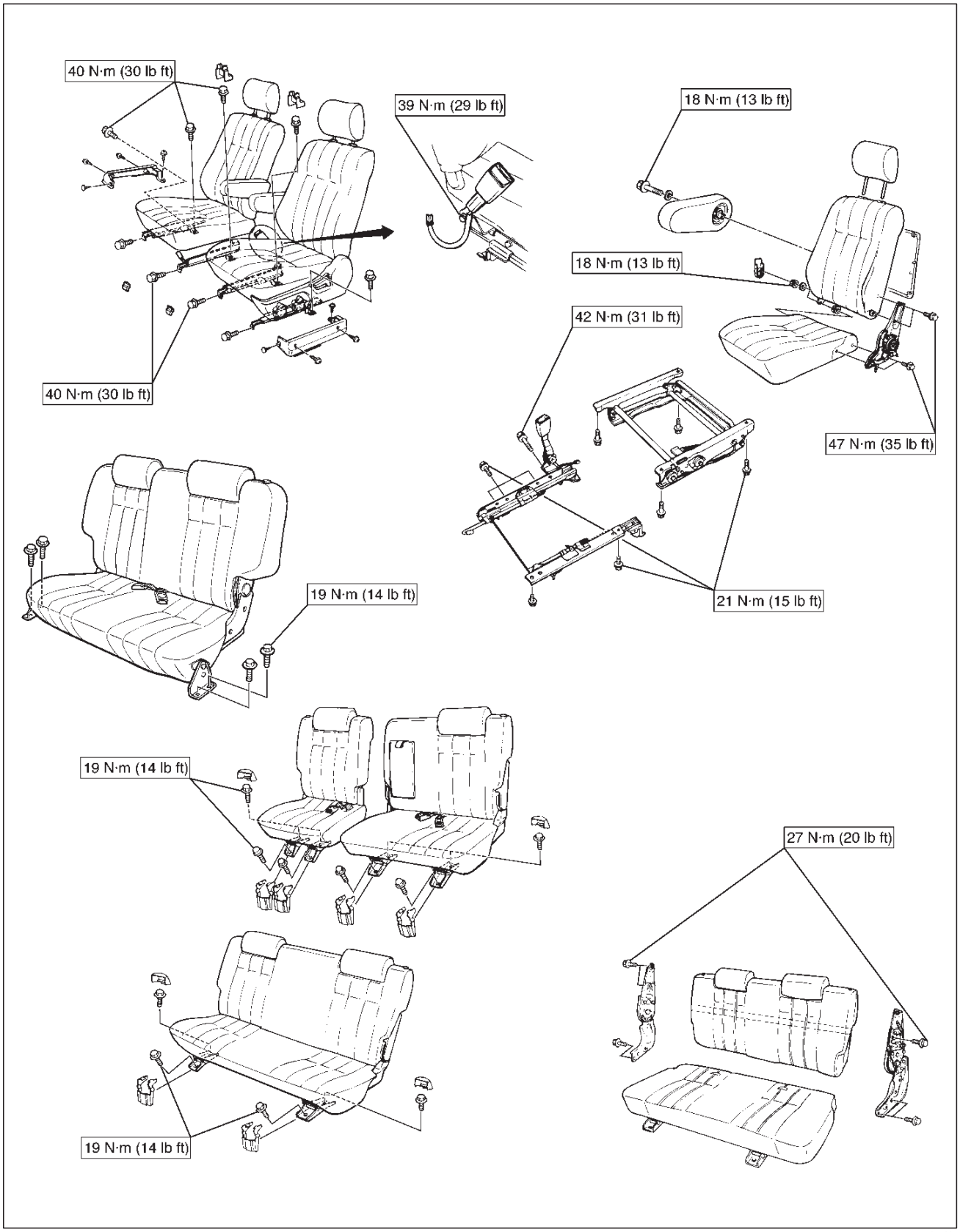

E10RX004

Downloaded from www.Manualslib.com manuals search engine

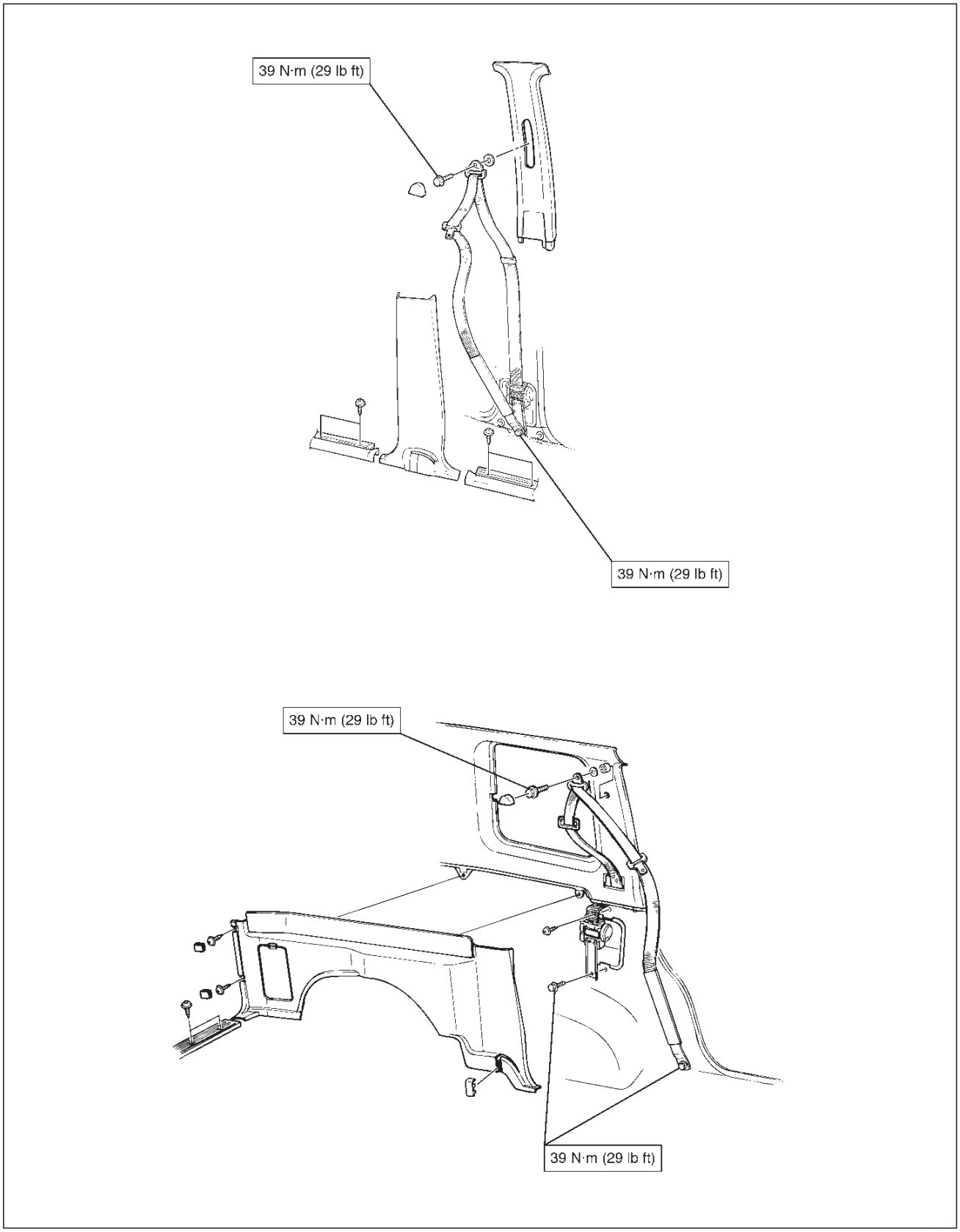

E10RX005

Downloaded from www.Manualslib.com manuals search engine

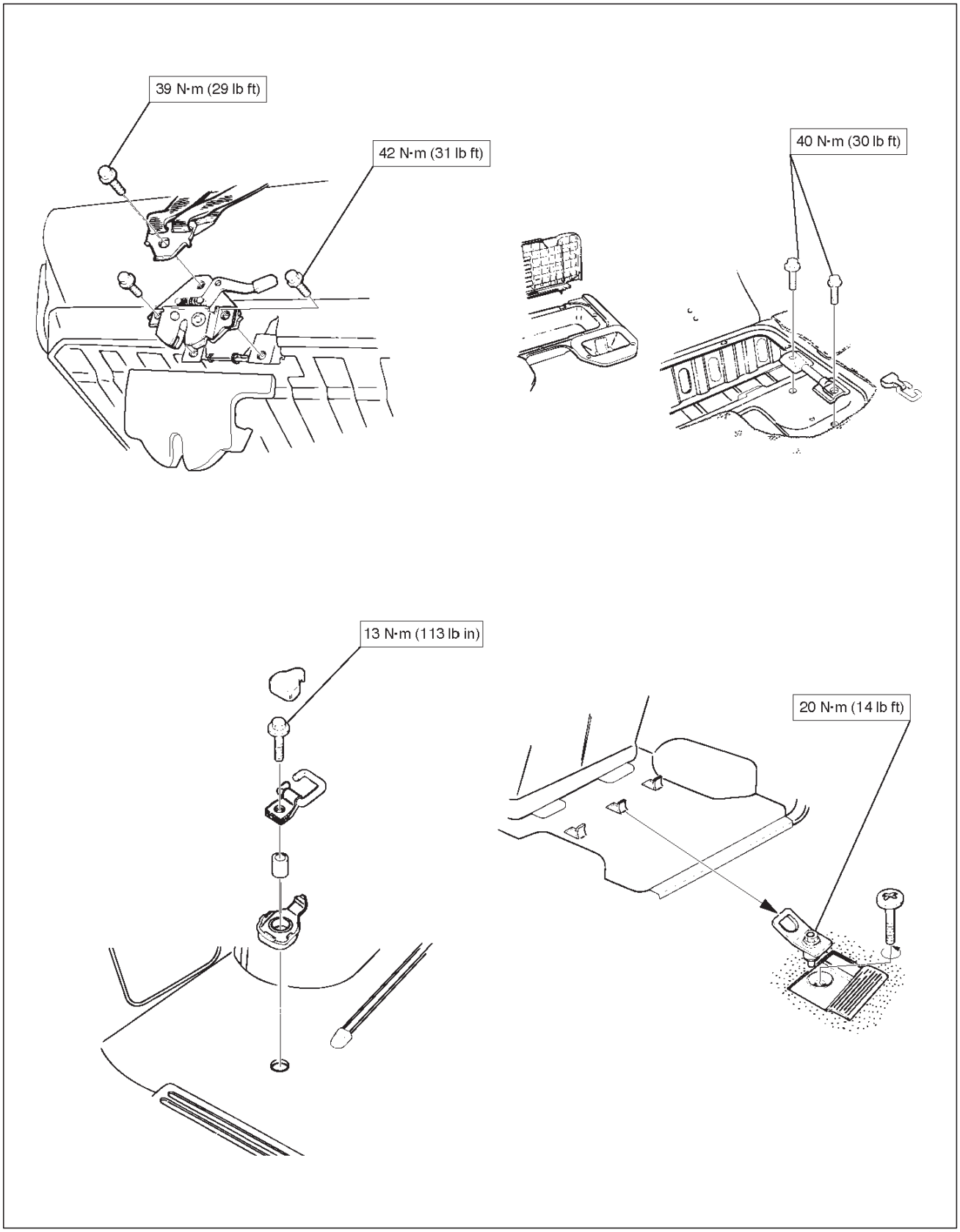

E10RW005

Downloaded from www.Manualslib.com manuals search engine

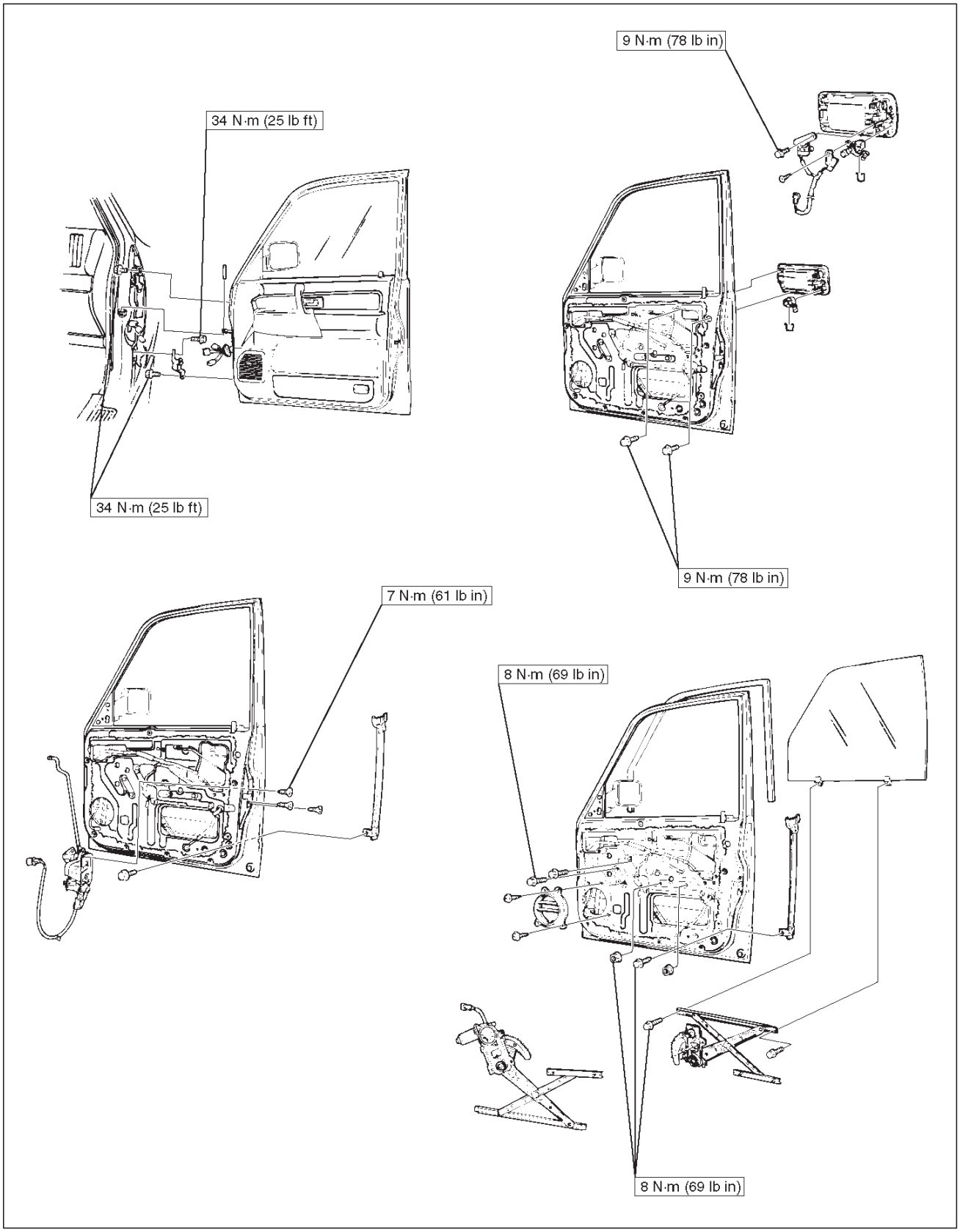

E10RW001

Downloaded from www.Manualslib.com manuals search engine

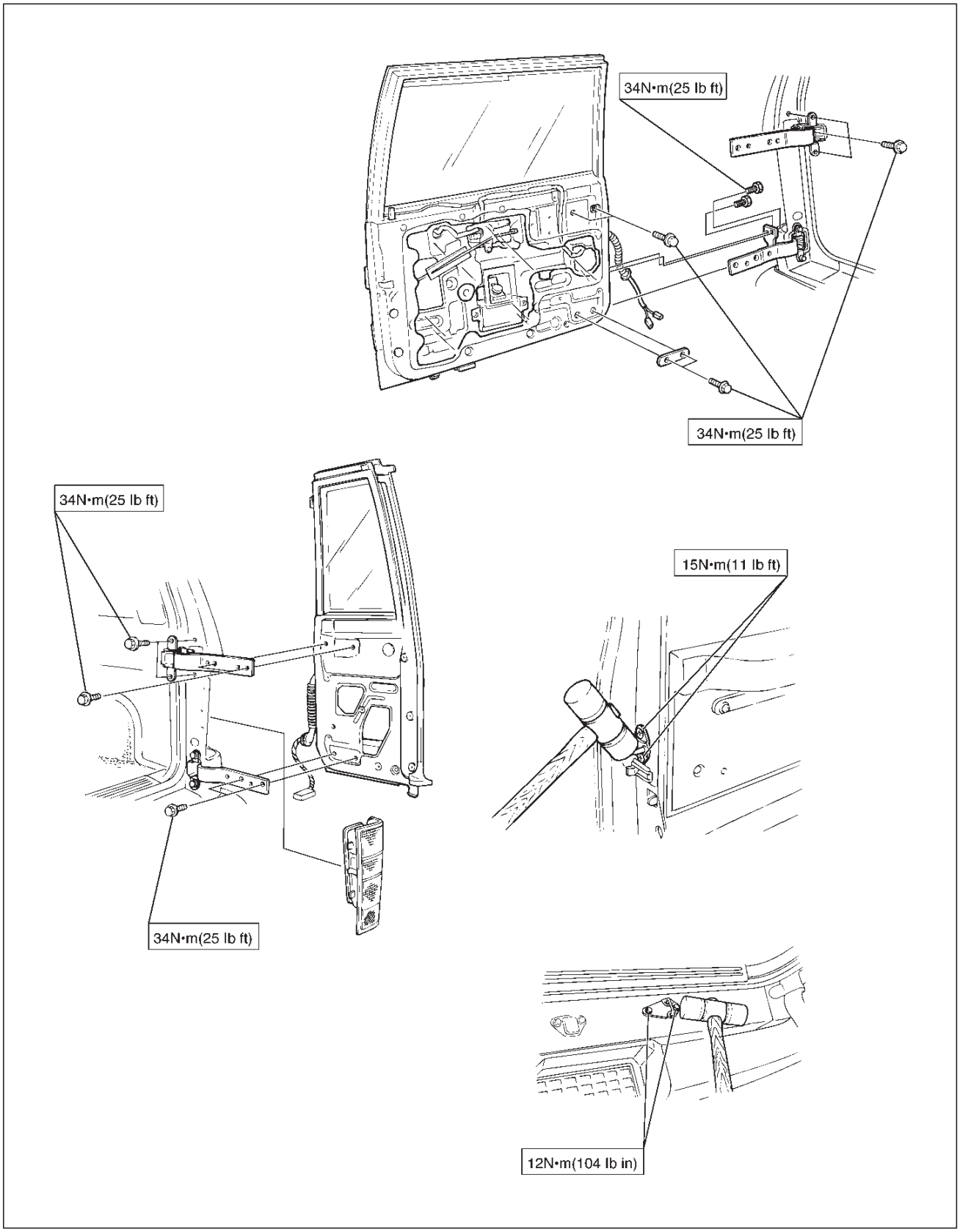

E10RX001

Downloaded from www.Manualslib.com manuals search engine

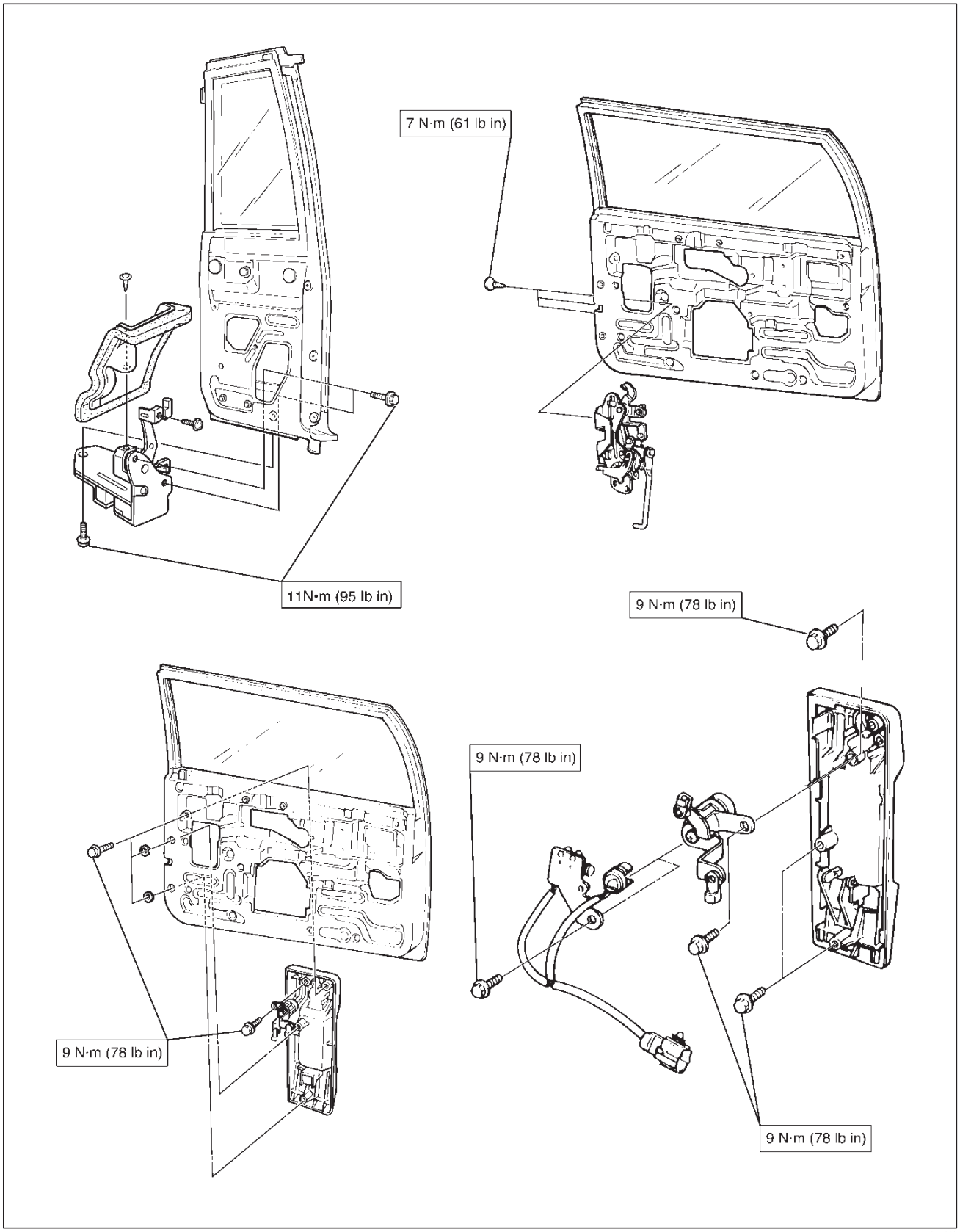

E10RX002

Downloaded from www.Manualslib.com manuals search engine

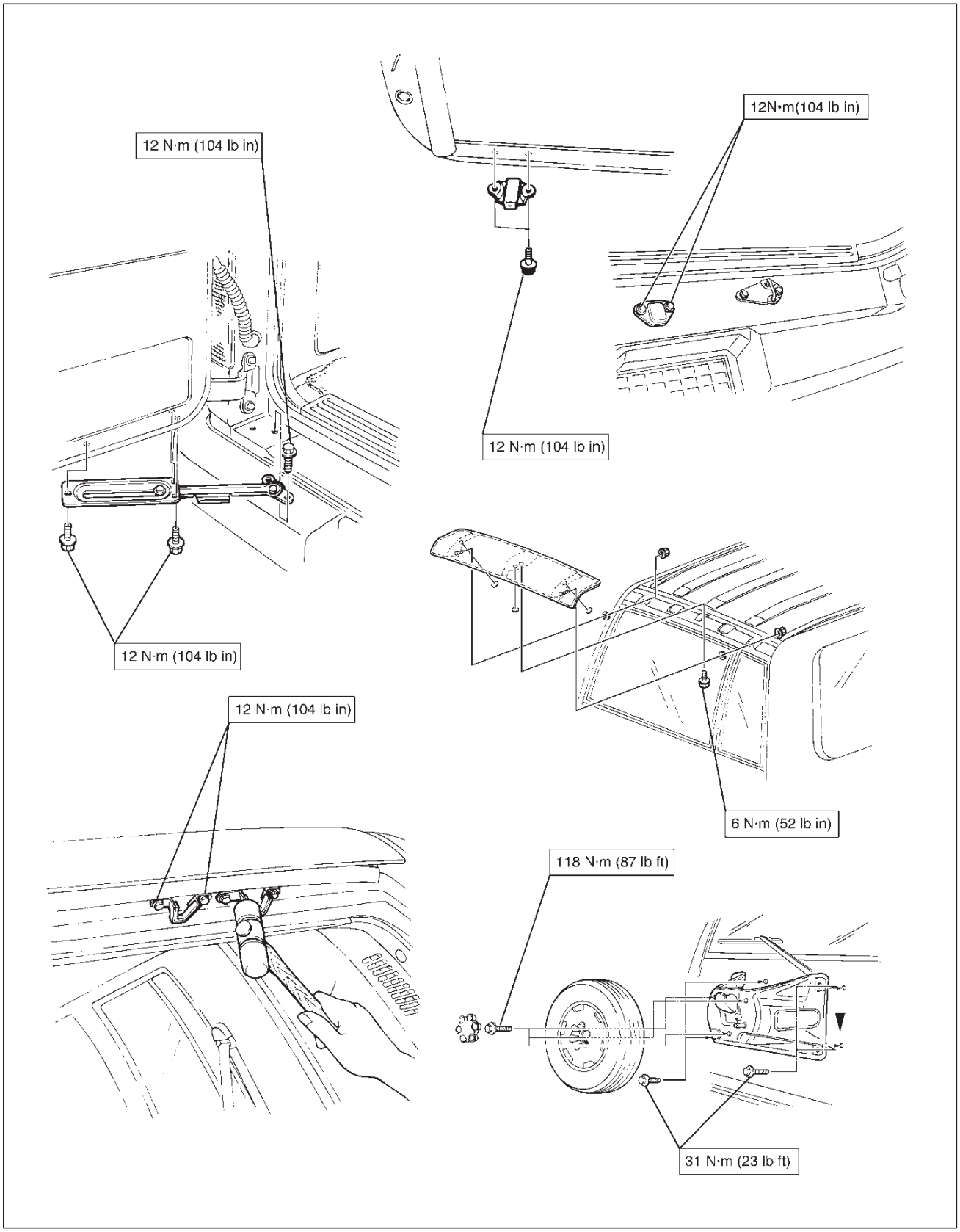

E10RX003

Downloaded from www.Manualslib.com manuals search engine

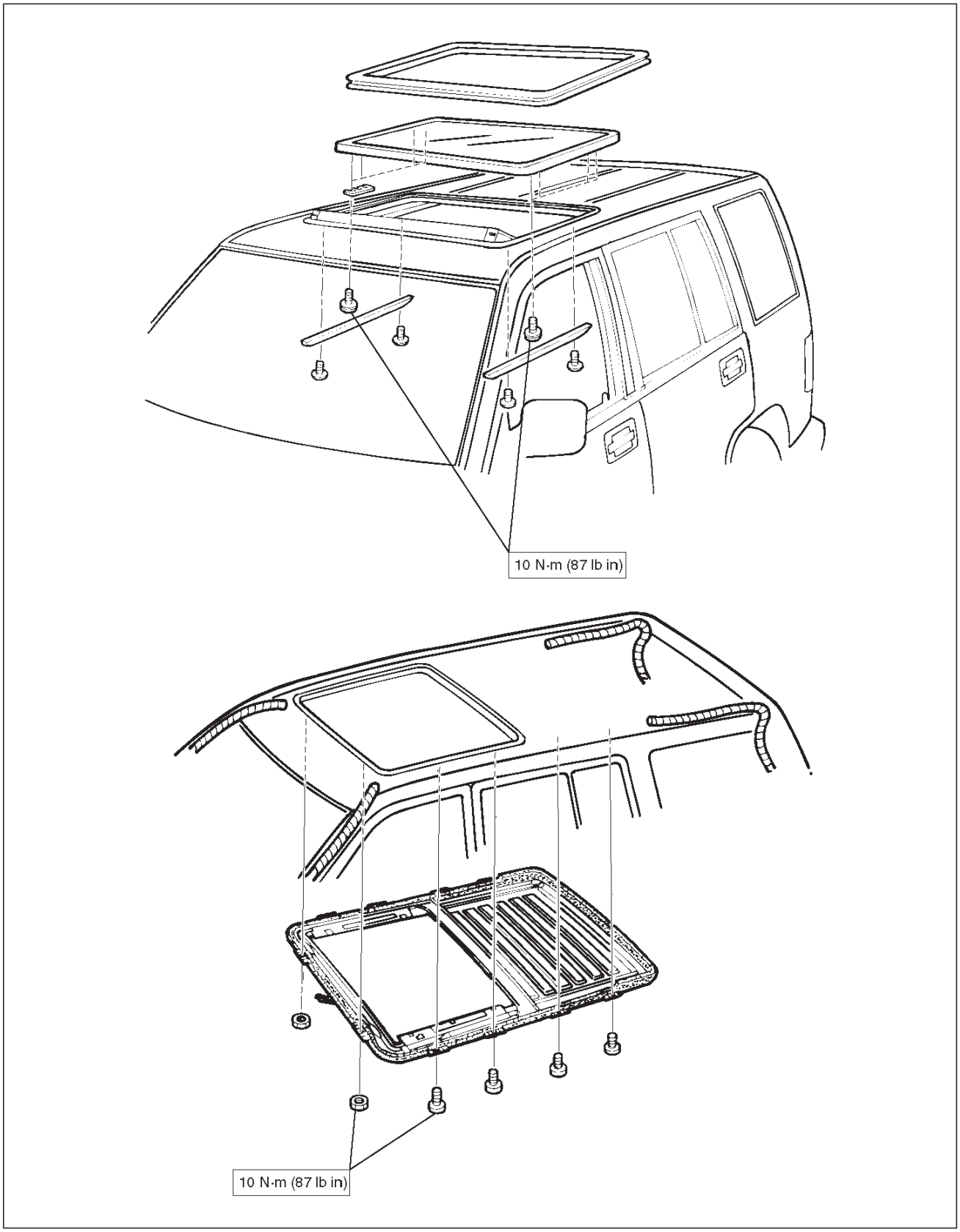

E10RS010

Downloaded from www.Manualslib.com manuals search engine

Special Tools

ILLUSTRATION	**TOOL NO.** TOOL NAME
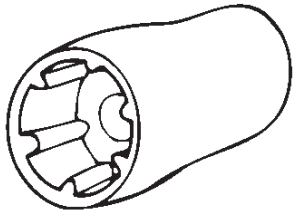	**J–34355** Spare Tire Carrier Nut Wrench

Downloaded from www.Manualslib.com manuals search engine

TROOPER

BODY AND ACCESSORIES

SEATS

CONTENTS

Service Precaution 8G–1
Front Seat Assembly 8G–2
Front Seat Assembly and Associated Parts 8G–2
Removal 8G–2
Installation 8G–2
Disassembled View 8G–3
Disassembly 8G–4
Reassembly 8G–5
Power Seat Assembly 8G–6
General Description 8G–6
Disassembled View 8G–6
Disassembly 8G–7
Reassembly 8G–9
Power Seat Switch 8G–9
Removal 8G–9
Installation 8G–9
Front Tilt Motor / Rear Tilt Motor / Slide Motor / Recliner Motor 8G–10
Parts Location 8G–10
Removal and Installation 8G–10
Seat Heater System 8G–11
General Description 8G–11
Seat Heater Switch Removal and Installation 8G–11
Heat Unit Parts Location 8G–11
Heat Unit Removal and Installation 8G–11
Rear Seat Assembly 8G–12
Rear Seat Assembly and Associated Parts 8G–12
Removal 8G–12
Installation 8G–12
Disassembled View (Split Type) 8G–13
Disassembly (Split Type) 8G–14
Reassembly (Split Type) 8G–15
Disassembled View (Bench Type) 8G–16
Disassembly (Bench Type) 8G–17
Reassembly (Bench Type) 8G–18
Rear Seat Foot Rest 8G–18
Rear Seat Foot Rest and Associated Parts 8G–18
Removal 8G–19
Installation 8G–19
Main Data and Specifications 8G–19

Service Precaution

WARNING: THIS VEHICLE HAS A SUPPLEMENTAL RESTRAINT SYSTEM (SRS). REFER TO THE SRS COMPONENT AND WIRING LOCATION VIEW IN ORDER TO DETERMINE WHETHER YOU ARE PERFORMING SERVICE ON OR NEAR THE SRS COMPONENTS OR THE SRS WIRING. WHEN YOU ARE PERFORMING SERVICE ON OR NEAR THE SRS COMPONENTS OR THE SRS WIRING, REFER TO THE SRS SERVICE INFORMATION. FAILURE TO FOLLOW WARNINGS COULD RESULT IN POSSIBLE AIR BAG DEPLOYMENT, PERSONAL INJURY, OR OTHERWISE UNNEEDED SRS SYSTEM REPAIRS.

CAUTION: Always use the correct fastener in the proper location. When you replace a fastener, use ONLY the exact part number for that application. ISUZU will call out those fasteners that require a replacement after removal. ISUZU will also call out the fasteners that require thread lockers or thread sealant. UNLESS OTHERWISE SPECIFIED, do not use supplemental coatings (Paints, greases, or other corrosion inhibitors) on threaded fasteners or fastener joint interfaces. Generally, such coatings adversely affect the fastener torque and the joint clamping force, and may damage the fastener. When you install fasteners, use the correct tightening sequence and specifications. Following these instructions can help you avoid damage to parts and systems.

Downloaded from www.Manualslib.com manuals search engine

Front Seat Assembly

Front Seat Assembly and Associated Parts

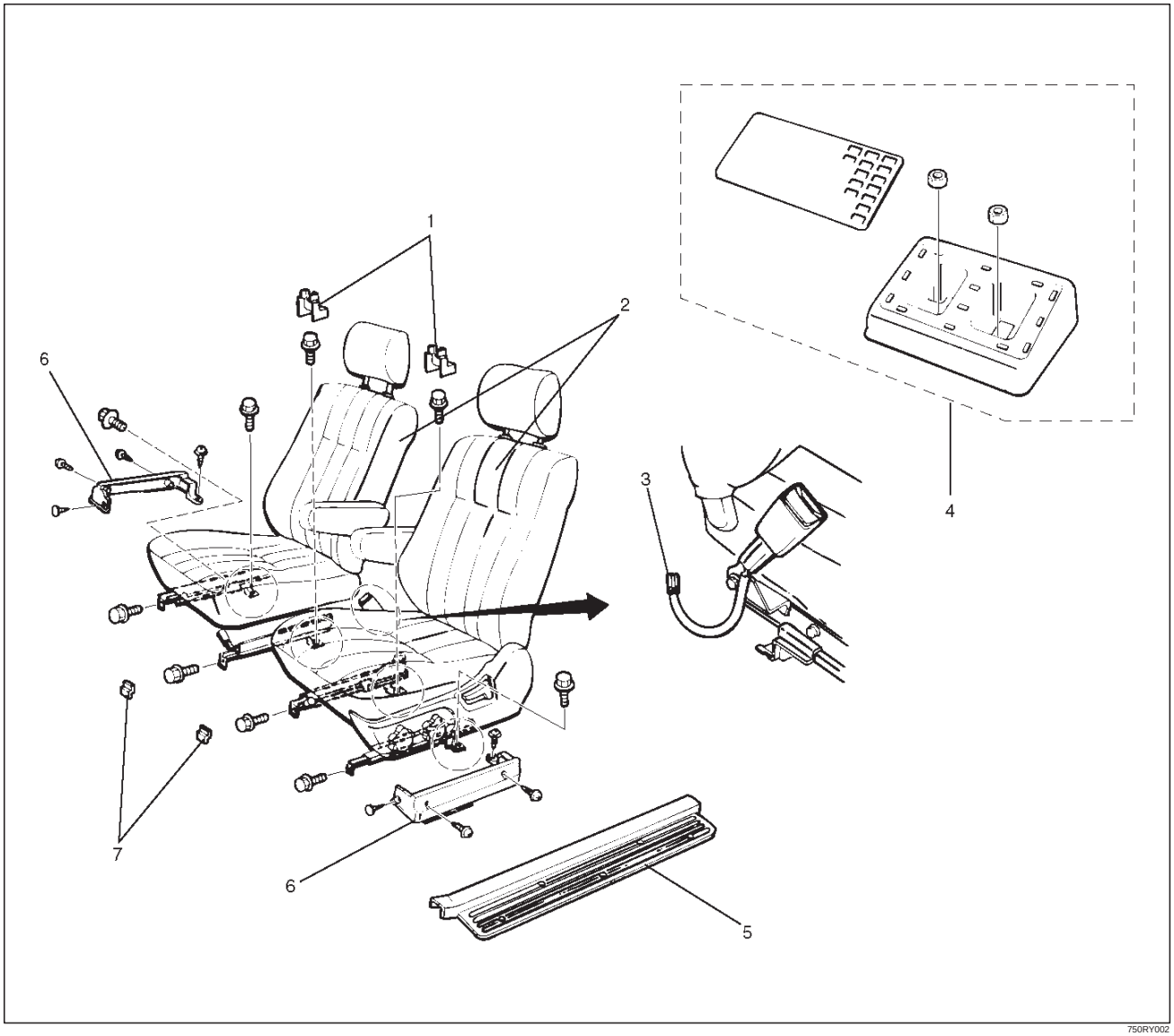

Legend

(1) Rear Cover
(2) Front Seat Assembly
(3) Seat Belt Warning Connector
(4) Rear Seat Foot Rest
(5) Door Sill Plate
(6) Riser Cover
(7) Front Cover

Removal

1. Disconnect the battery ground cable.
2. Remove the front cover.
3. Remove the rear cover.
   - Remove the cover fixing screw from the rear inner cover, if this model is equipped with the power seats.
4. Remove the door sill plate.
5. Remove the rear seat foot rest.
   - Refer to the Rear Seat Foot Rest in this section.
6. Remove the riser cover.
7. Remove the seat belt warning connector (Driver's side only).
8. Remove the front seat assembly.
   - Disconnect the power seat connector, if this model is equipped with the power seats.

Installation

To install, follow the removal steps in the reverse order, noting the following points:

Downloaded from www.Manualslib.com manuals search engine

1. Tighten the front seat assembly fixing bolts to the specified torque.

   Torque: 40 N·m (30 lb ft)

2. Install the longest bolt to the rear inner side fixing location, if this model is equipped with power seats.

Disassembled View

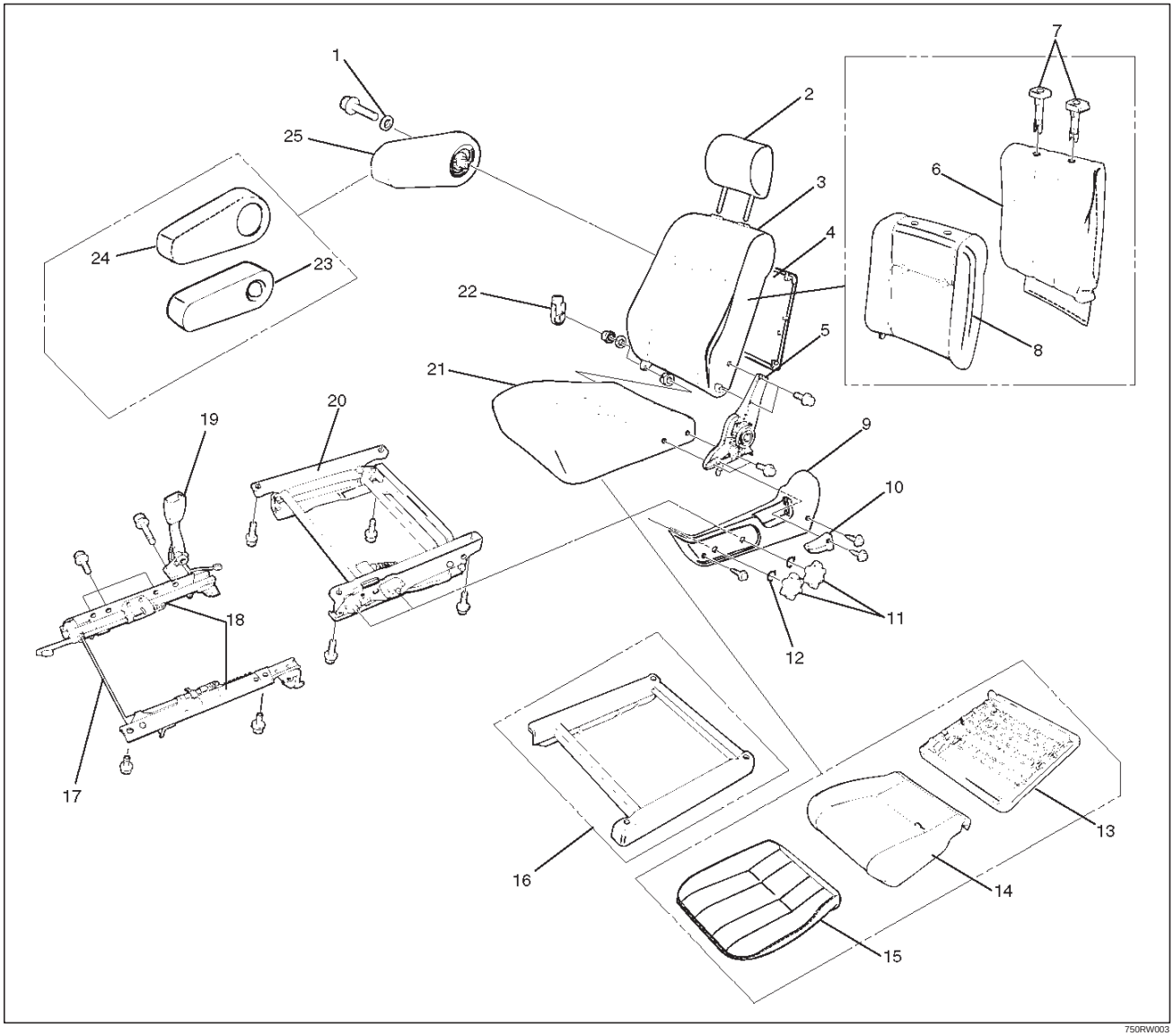

Legend

(1) Spring Washer
(2) Head Rest
(3) Seat Back Assembly
(4) Back Board Assembly
(5) Reclining Device
(6) Trim Cover
(7) Guide Holder
(8) Pad & Frame Assembly
(9) Slide Cover
(10) Reclining Knob
(11) Dial (W/Height Adjuster)
(12) Lock Spring
(13) Frame Assembly
(14) Pad Assembly
(15) Trim Cover
(16) Spacer (W/O Height Adjuster)
(17) Release Wire
(18) Seat Adjuster
(19) Seat Belt Knuckle Assembly
(20) Height Adjuster
(21) Seat Cushion Assembly
(22) Hinge Cover
(23) Pad & Frame Assembly
(24) Trim Cover
(25) Armrest Assembly

Downloaded from www.Manualslib.com manuals search engine

Disassembly

1. Remove the head rest.
2. Remove the reclining knob.
3. Remove the dial(1) (W/height adjuster).
   - Remove the side cover fixing screws and the dial lock spring(2).

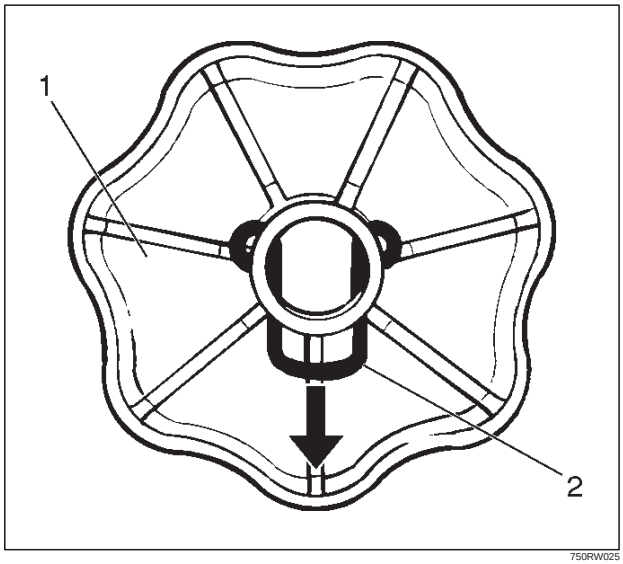

750RW025

4. Remove the side cover.
5. Remove the armrest assembly.
   - Open the armrest fastener and remove the armrest fixing bolt.

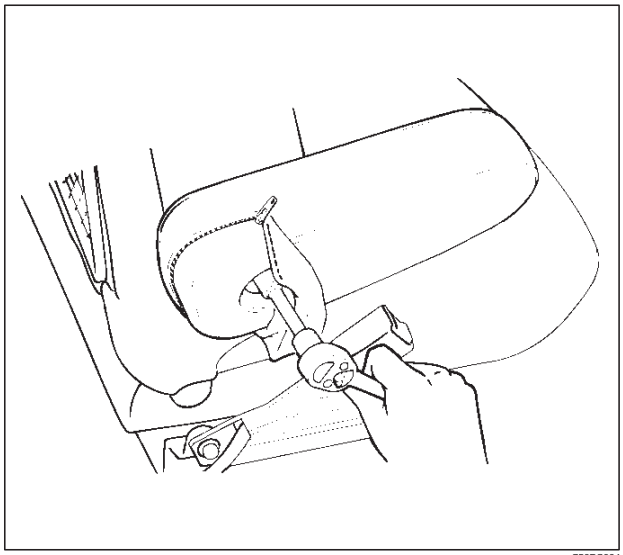

750RS004

6. Remove the trim cover.
7. Remove the pad and frame assembly.
8. Remove the hinge cover.
9. Remove the back board assembly(3).
   - Pull out the back board while prying the clip of the back board free from the seat back assembly.

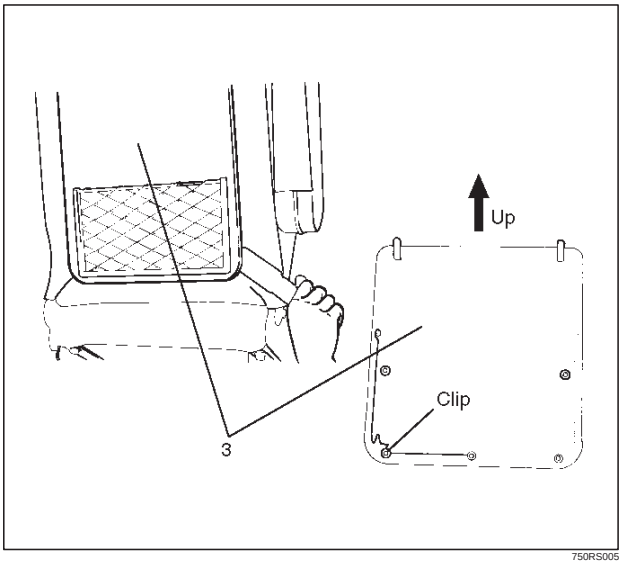

750RS005

10. Remove the reclining device.
    - Turn up the seat back trim cover in order to remove the reclining device fixing bolts.

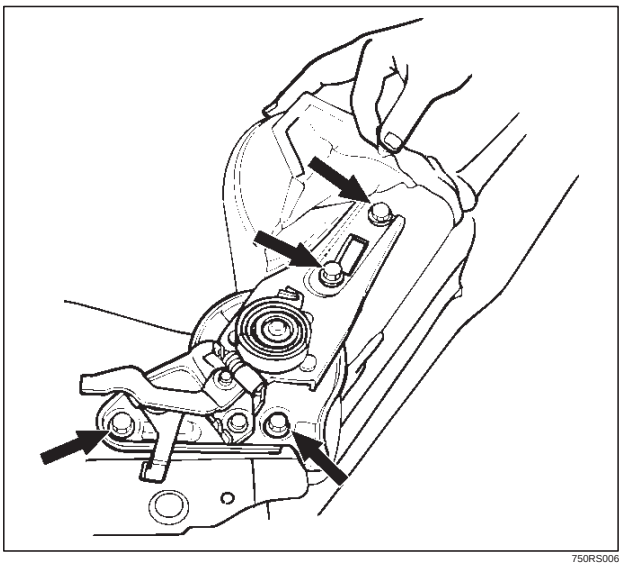

750RS006

Downloaded from www.Manualslib.com manuals search engine

11. Remove the seat back assembly.
    - Remove the seat back assembly fixing nut on the opposite side of the reclining device.

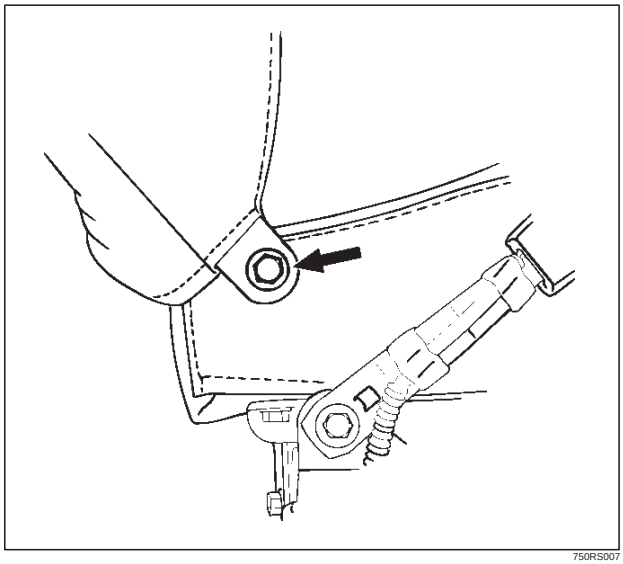

750RS007

12. Remove the guide holder.
    - Pull the guide holder out by holding the bottom end of it from the seat back assembly.
13. Remove the trim cover.
    - Remove the trim cover hog rings from the back side of the seat back.
    - With close attention paid to the hog rings and the wire which connect the trim cover and the pad and frame assembly, remove the trim cover while turning it up.
14. Remove the pad and frame assembly.
15. Remove the seat adjuster.
    - Disconnect the release wire(4) and remove the fixing bolts.

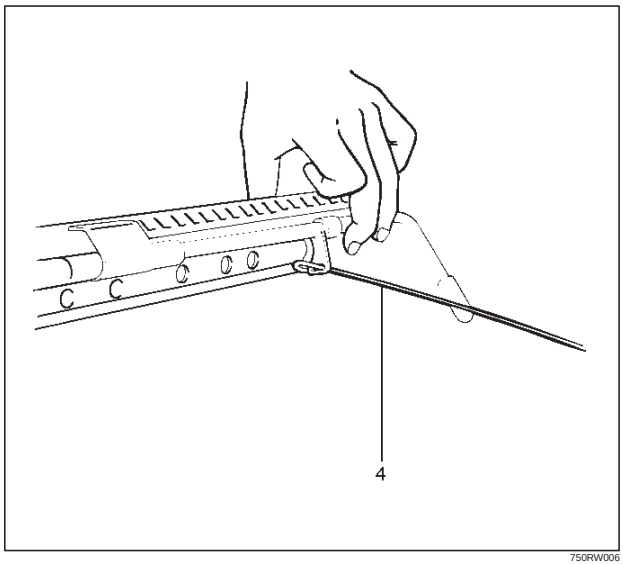

750RW006

    - Remove the seat belt buckle assembly.
16. Remove the height adjuster.
17. Remove the spacer (W/O height adjuster).
18. Remove the seat cushion assembly.
19. Remove the trim cover.
    - Remove the trim cover hog rings from the back side of the seat cushion assembly.
    - With close attention paid to the hog rings and the wire which connect the trim cover and the pad and frame assembly, remove the trim cover while turning it up.
20. Remove the frame assembly.
21. Remove the pad assembly.

Reassembly

To reassembly, follow the disassembly steps in the reverse order, noting the following points.

1. Tighten the armrest assembly fixing bolts to the specified torque.

   Torque: 18 N·m (13 lb ft)

2. Tighten the reclining device fixing bolts to the specified torque.

   Torque: 47 N·m (35 lb ft)

Downloaded from www.Manualslib.com manuals search engine

Power Seat Assembly

General Description

The circuit consists of the power seat switch, front tilt motor (driver's seat only), rear tilt motor (driver's seat only), slide motor and the recliner motor.

The power seat switch has a tilt & slide switch and a recliner switch.
The motor built in the seat can be actuated by operating these switches to move the seat to desired position, independent of the position of the starter switch.

Disassembled View

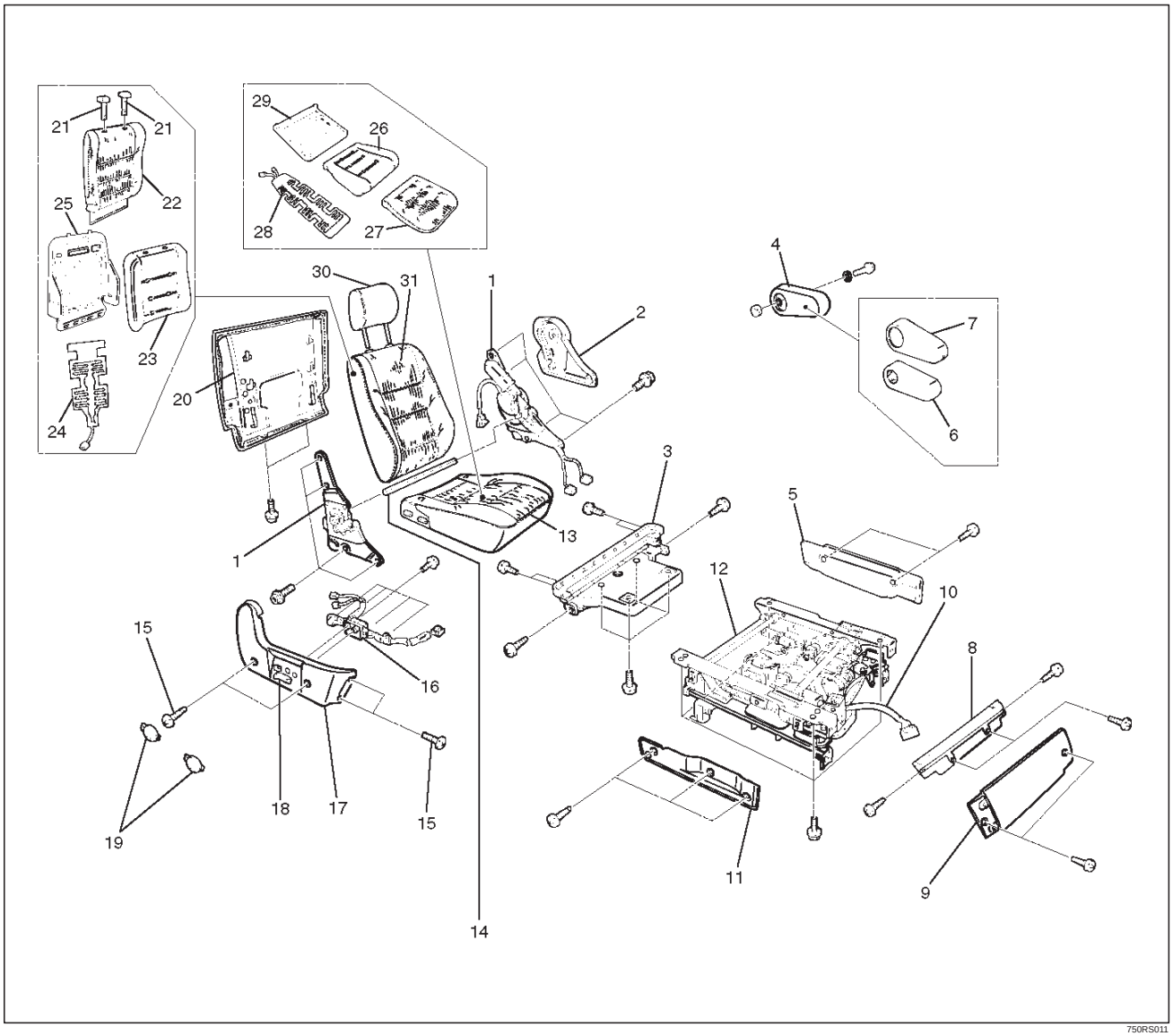

750RS011

Legend

(1) Reclining Device
(2) Inner Cover
(3) Rear Cover
(4) Armrest Assembly
(5) Inner Lower Cover
(6) Pad & Frame Assembly
(7) Trim Cover
(8) Front Lower Cover
(9) Front Cover
(10) Power Seat Harness
(11) Outer Lower Cover
(12) Adjuster Assembly
(13) Seat Cushion Assembly
(14) Connecting Shaft
(15) Outer Cover Fixing Screws
(16) Switch Assembly
(17) Outer Cover
(18) Switch Knob
(19) Outer Cover Cap
(20) Back Board Assembly
(21) Guide Holder

Downloaded from www.Manualslib.com manuals search engine

(22) Trim Cover
(23) Pad Assembly
(24) Seat Heater
(25) Frame Assembly
(26) Pad Assembly
(27) Trim Cover
(28) Seat Heater
(29) Frame Assembly
(30) Head Rest
(31) Seat Back Assembly

Disassembly

1. Disconnect the battery ground cable.
2. Remove the head rest.
3. Remove the switch knob.
   - Pull the switch knob out.
4. Remove the outer cover cap.
5. Remove the outer cover fixing screws.
   - Pull up the outer cover(1) to remove the cover from the reclining device(2).

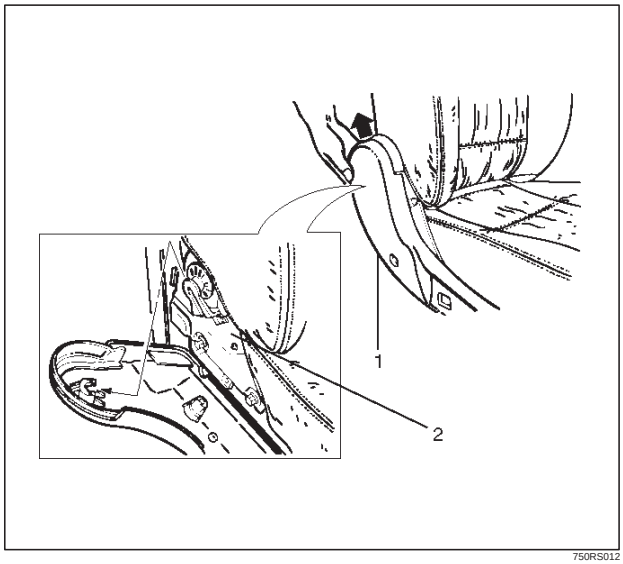

750RS012

6. Remove the front cover.
7. Remove the front lower cover.
8. Remove the rear cover.
9. Remove the outer cover.
   - Disconnect the switch connectors and remove the harness fixing clips.
10. Remove the switch assembly.
    - Remove the switch fixing screws from the outer cover.
11. Remove the armrest assembly.
    - Open the armrest fastener and remove the fixing bolt.

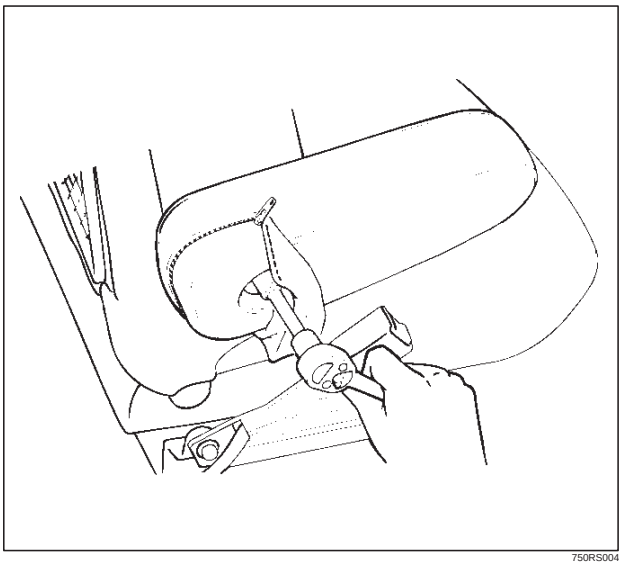

750RS004

12. Remove the trim cover.
13. Remove the pad & frame assembly.
14. Remove the inner cover
    - Remove the cover fixing screw.
    - Pull up the inner cover to remove the cover from the reclining device(3).

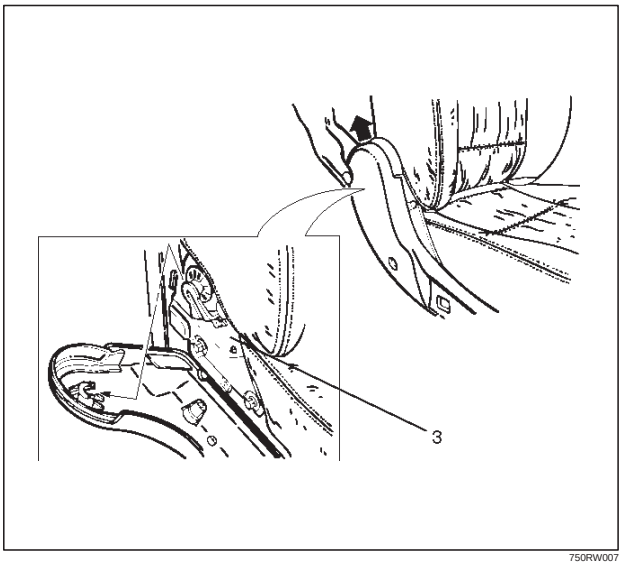

750RW007

Downloaded from www.Manualslib.com manuals search engine

15. Remove the back board assembly(4).
    - Remove the board fixing screws.
    - Pull the back board downward and remove the board from the seat back frame(5).

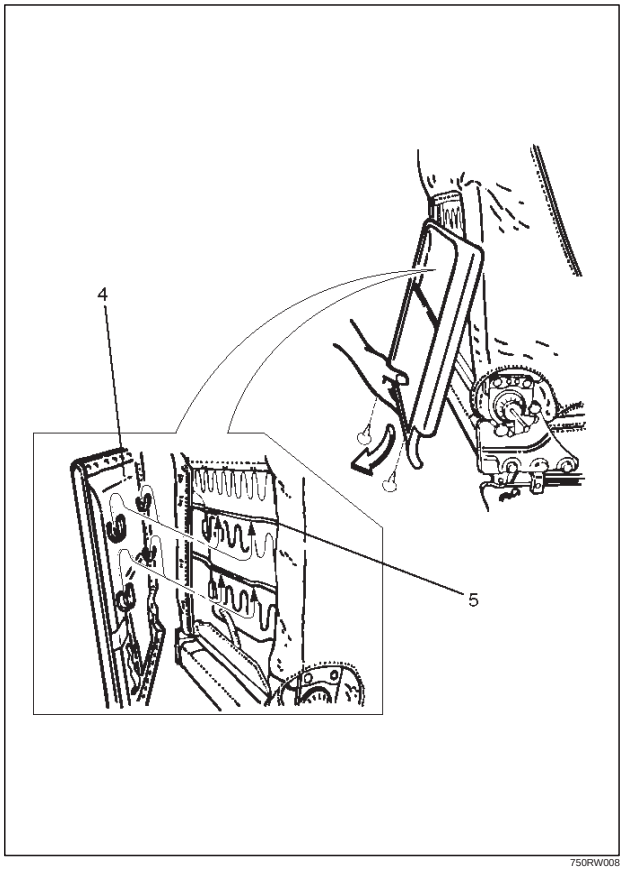

750RW008

16. Remove the reclining device(7).
    - Remove the device lower side fixing bolt in order to separate the seat back from the seat cushion.
    - Disconnect the seat heater connector.
    - Remove the trim cover(6) hog rings from the backside of the seat back assembly.
    - Turn up the seat back trim cover to remove the reclining device upper side fixing bolt.
    - Disconnect the connecting shaft and the reclining device connectors.

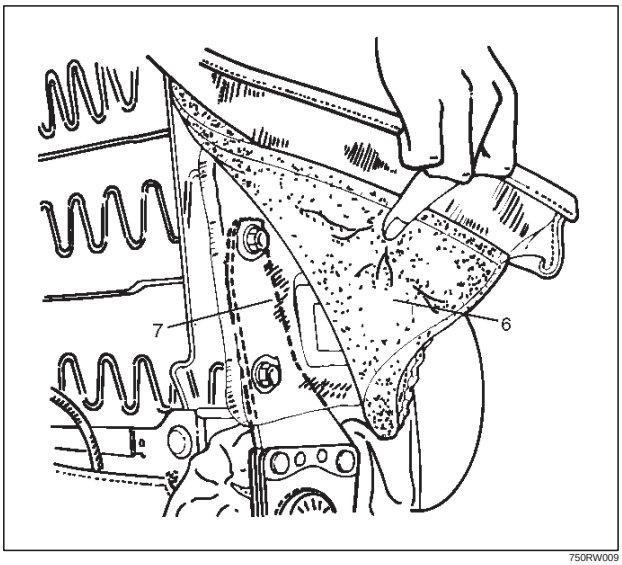

750RW009

17. Remove the seat back assembly.
18. Remove the guide holder(8).
    - Remove the trim cover fixing hog rings(9) from the backside of the seat back assembly.
    - Hold the tip end of the guide holder and pull the holder out from the seat back assembly.

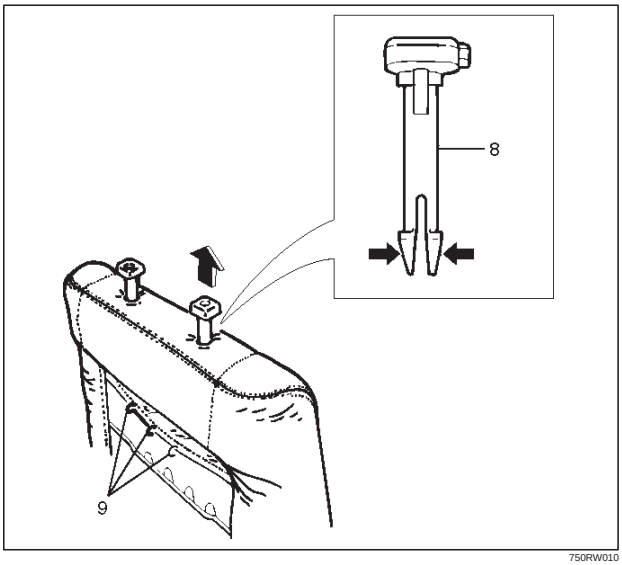

750RW010

19. Remove the trim cover.
    - Remove the trim cover hog rings from the backside of the seat back.
    - With close attention paid to the hog rings and the wire which connect the trim cover and pad & frame assembly, remove the trim cover while turning it up.
20. Remove the seat heater.
21. Remove the pad assembly.
22. Remove the frame assembly.
23. Remove the outer lower cover.
24. Remove the inner lower cover.
25. Remove the adjuster assembly.
    - Disconnect the connectors and remove the fixing bolts.

Downloaded from www.Manualslib.com manuals search engine

- Remove the power seat harness from the adjuster assembly.

26. Remove the seat cushion assembly.
27. Remove the trim cover.
    - Remove the trim cover hog rings from the backside of the seat cushion assembly.
    - With close attention paid to the hog rings and the wire which connect the trim cover and the pad & frame assembly, remove the trim cover while turning it up.
28. Remove the seat heater.
29. Remove the frame assembly.
30. Remove the pad assembly.

Reassembly

To reassemble, follow the disassembly steps in the reverse order, noting the following point.

1. Tighten the fixing bolts to the specified torque.
    - Refer to the Torque Specifications in this section.

Power Seat Switch

Removal

1. Remove the side cover(3).
    - Refer to the Power Seat Assembly in this section.
2. Remove the tilt & slide switch lever(4).
    - Hold the switch lever with your fingers and pull it toward you.
3. Remove the tilt & slide switch(2).
    - Remove two screws.
4. Remove the recliner switch(1).
    - Remove two screws.

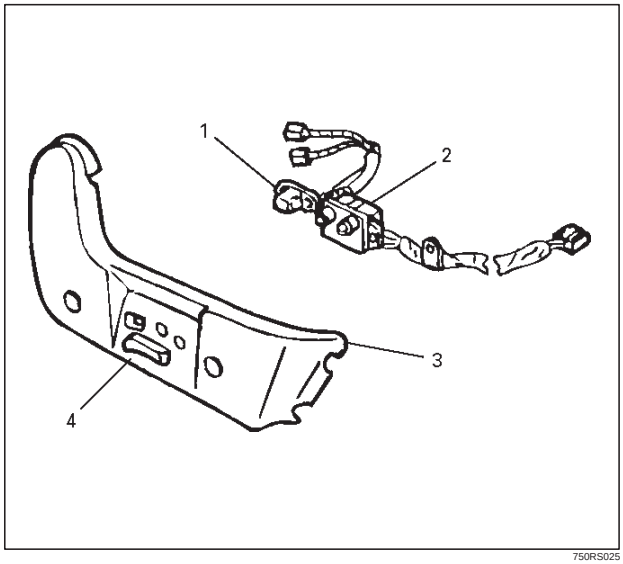

750RS025

Installation

To install, follow the removal steps in the reverse order.

Downloaded from www.Manualslib.com manuals search engine

Front Tilt Motor / Rear Tilt Motor / Slide Motor / Recliner Motor

Parts Location

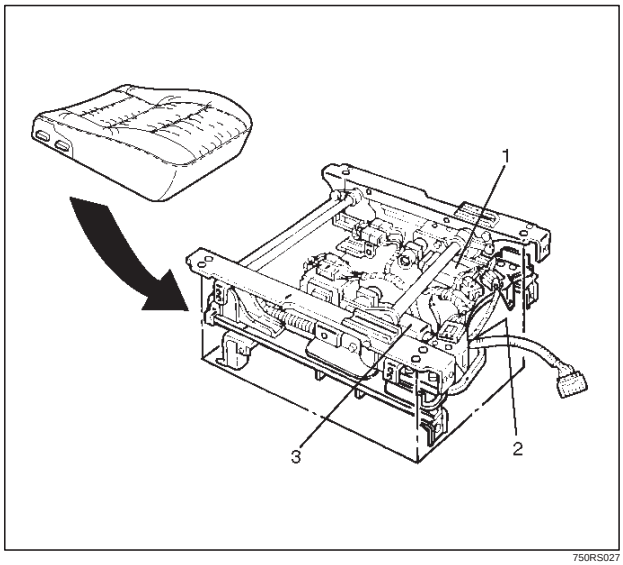

750RS027

Legend

(1) Tilt Motor
(2) Slide Motor
(3) Tilt Motor

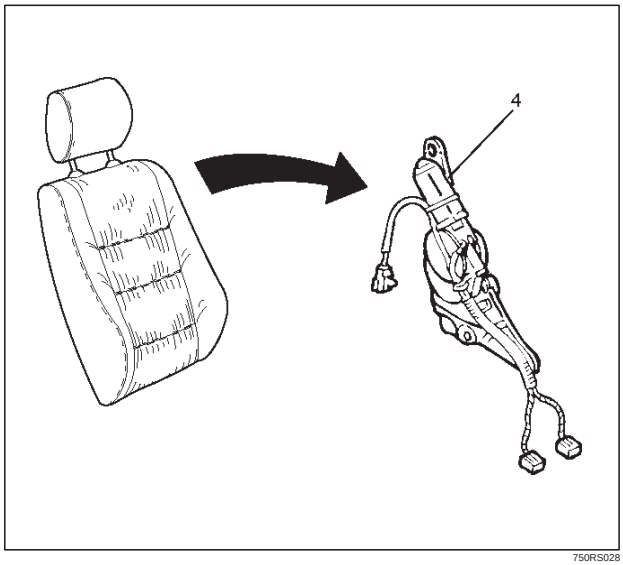

750RS028

Legend

(4) Recliner Motor

Removal and Installation

Refer to the Power Seat Assembly in this section.

Downloaded from www.Manualslib.com manuals search engine

Seat Heater System

General Description

The circuit consists of the starter switch, seat heater switch and the heat unit.
The seat heater is provided in driver's and front passenger seats (as option).
When the seat heater switch is ON, the seat heat built in the seat back and cushion is switched on to warm the seats.
To prevent the seats from being overheated, the circuit is fitted with a thermostat.

Seat Heater Switch Removal and Installation

Refer to the Seat Heater Switch in Lighting System section.

Heat Unit Parts Location

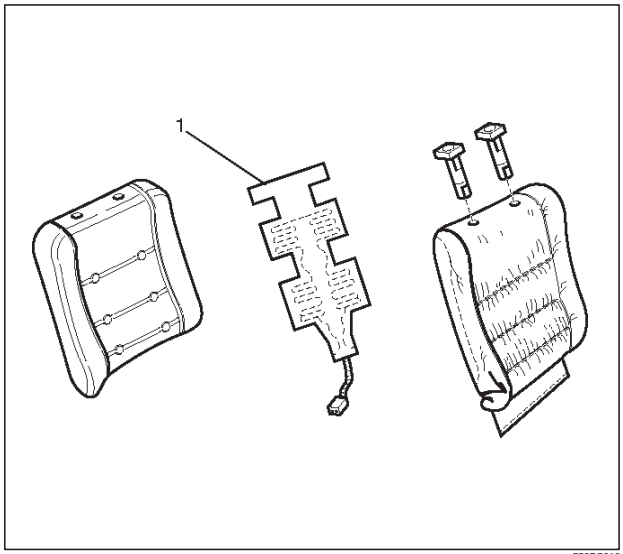

750RS018

Legend

(1) Heat Unit (Seat Back Side)

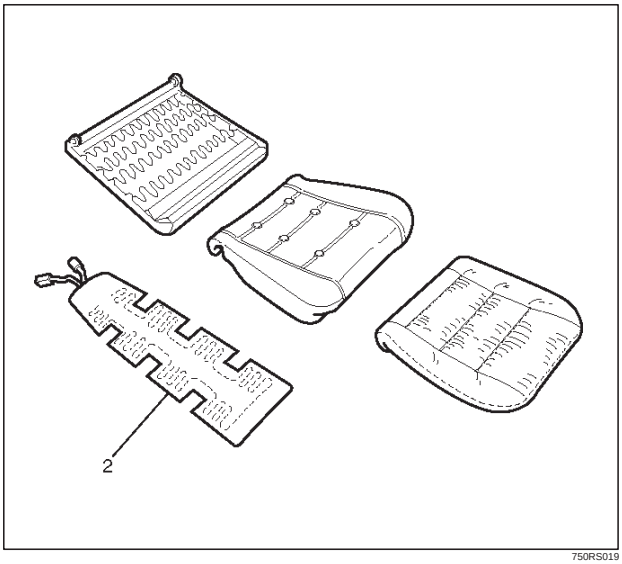

750RS019

Legend

(2) Heat Unit (Seat Cushion Side)

Heat Unit Removal and Installation

Refer to the Power Seat Assembly in this section.

Downloaded from www.Manualslib.com manuals search engine

Rear Seat Assembly

Rear Seat Assembly and Associated Parts

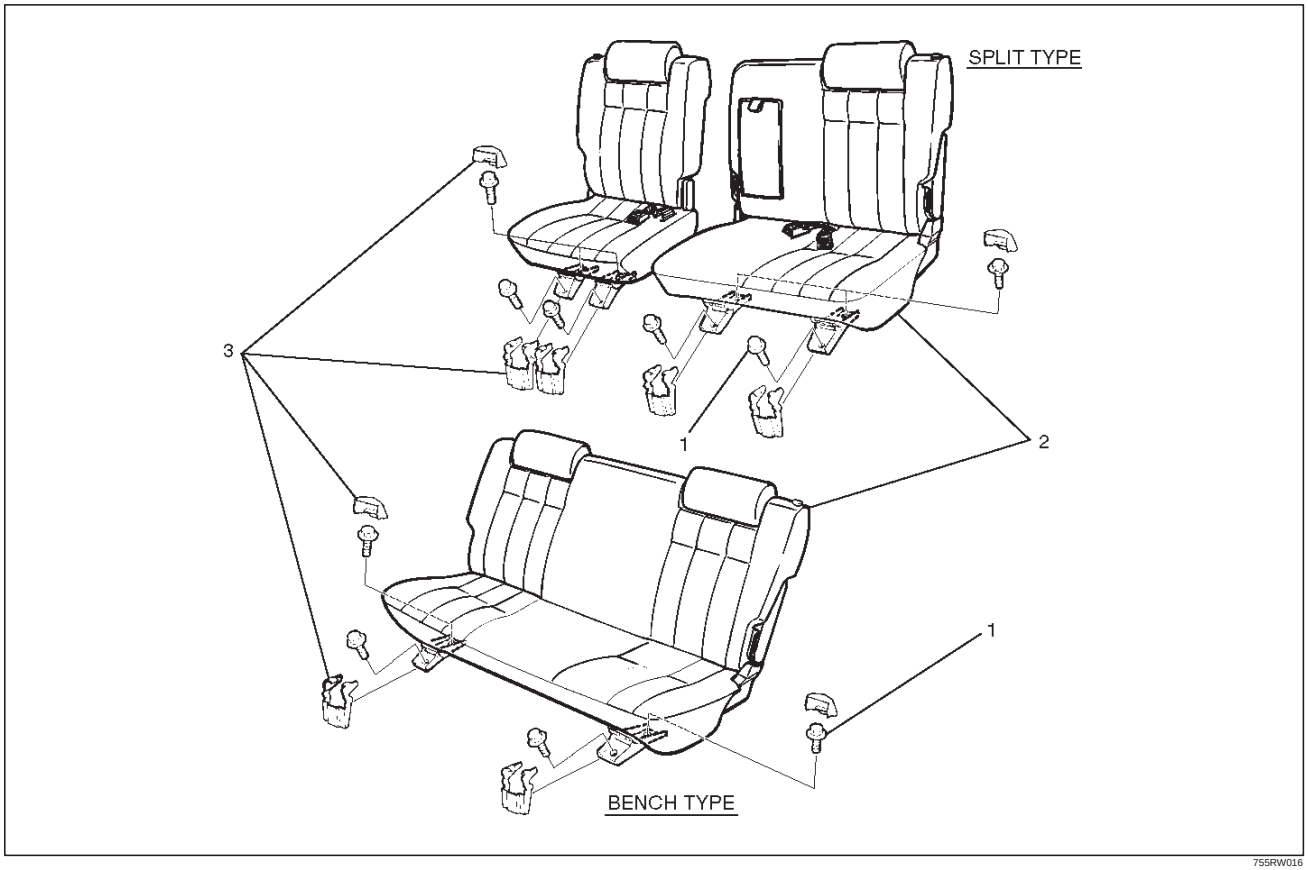

755RW016

Legend

(1) Fixing Bolts
(2) Rear Seat Assembly
(3) Mounting Bracket Cover

Removal

1. Unlock the rear seat(1) lock to remove it.
2. Remove the mounting bracket cover.
3. Remove the fixing bolts.

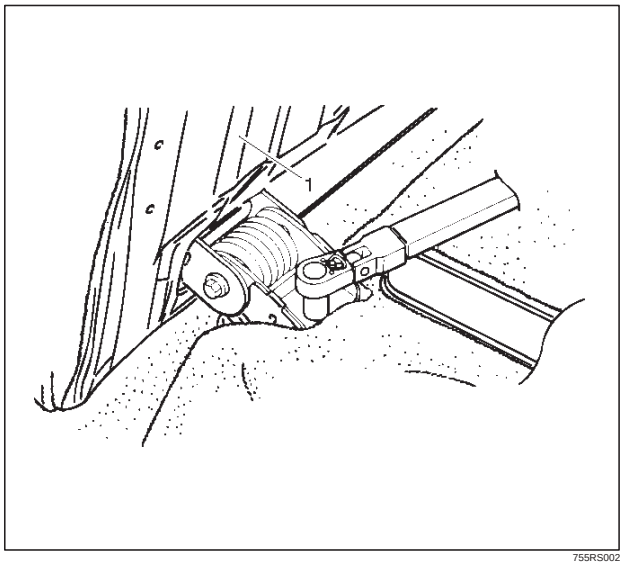

755RS002

4. Remove the rear seat assembly.

Installation

To install, follow the removal steps in the reverse order, noting the following point.

1. Tighten the rear seat fixing bolts to the specified torque.

   Torque: 19 N·m (14 lb ft)

Downloaded from www.Manualslib.com manuals search engine

Disassembled View (Split Type)

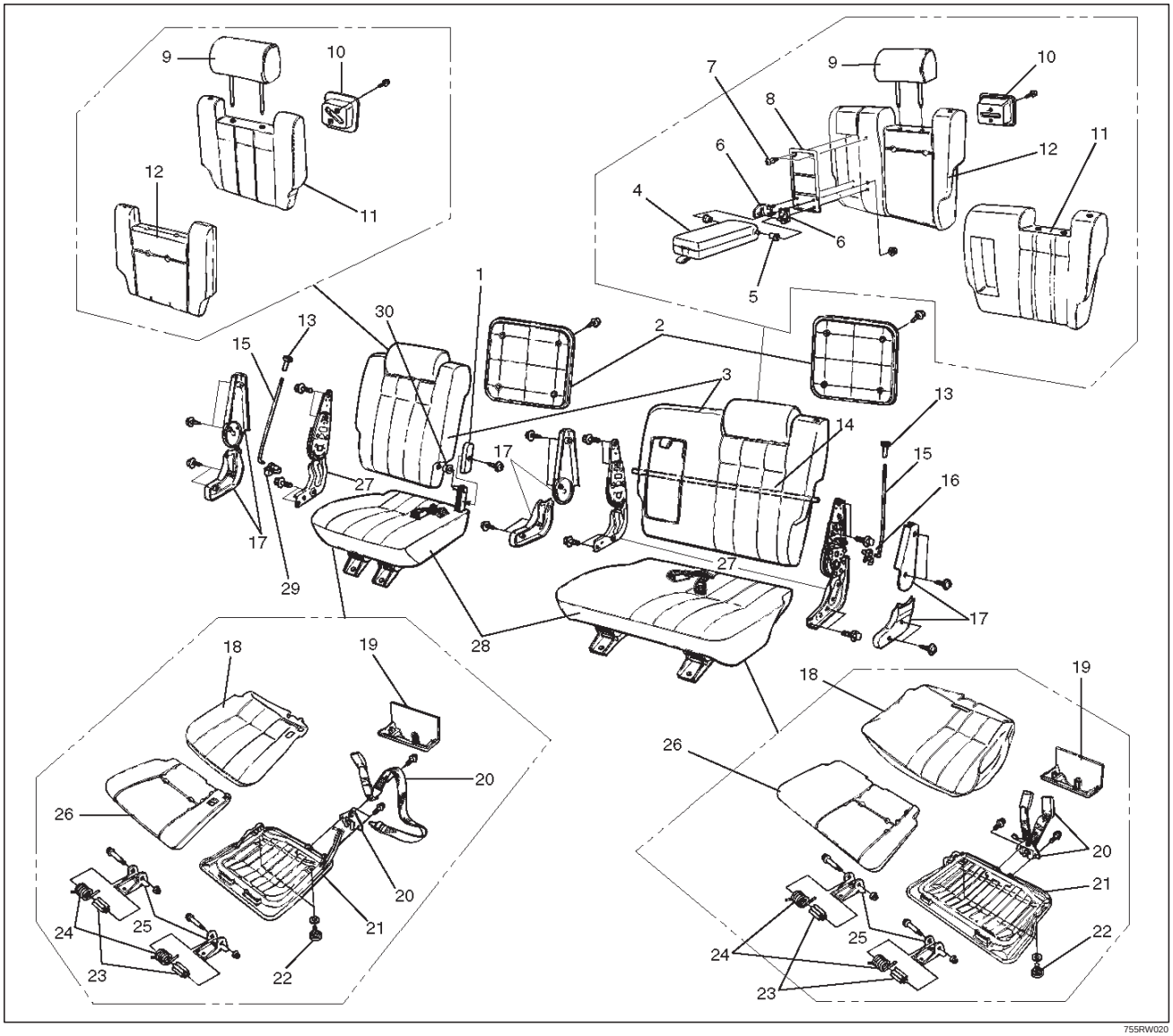

755RW020

Legend

(1) Free Hinge Cover
(2) Back Board
(3) Seat Back Assembly
(4) Armrest Assembly
(5) Bush
(6) Armrest Set Bracket
(7) Clip
(8) Armrest Board
(9) Pillow Assembly
(10) Band Hook Cover
(11) Trim Cover
(12) Pad & Frame Assembly
(13) Release Knob
(14) Connecting Shaft
(15) Release Rod
(16) Linkage Bush
(17) Device Cover
(18) Trim Cover
(19) Seat Lock Cover
(20) Rear Seat Belt Buckle and Lock Assembly
(21) Frame Assembly
(22) Stopper Rubber
(23) Spring Collar
(24) Return Spring
(25) Mounting Bracket
(26) Pad Assembly
(27) Reclining Device
(28) Seat Cushion Assembly
(29) Linkage Bush
(30) Bush

Downloaded from www.Manualslib.com manuals search engine

Disassembly (Split Type)

1. Remove the back board.
   - Remove the clips and the back board.
2. Remove the device cover.
3. Remove the release knob.
   - Turn the knob counterclockwise to remove it.
4. Remove the release rod.
   - Disconnect the rod from the linkage bush.
5. Remove the reclining device.

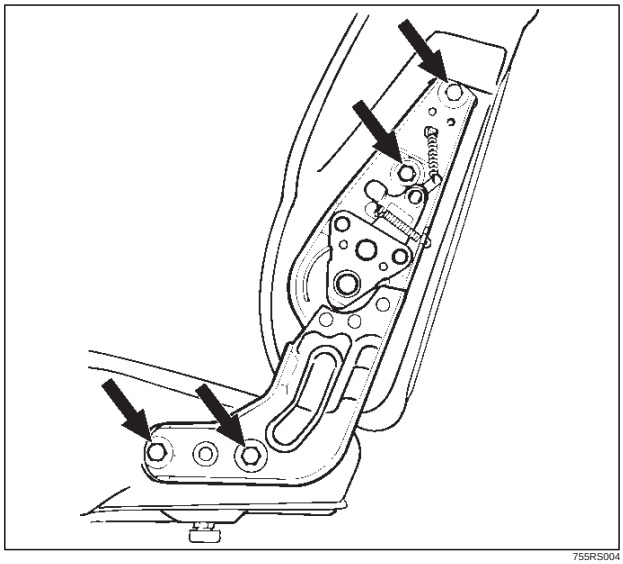

755RS004

6. Remove the connecting shaft.
7. Remove the seat back assembly.
8. Remove the band hook cover.
9. Remove the pillow assembly.
   - Turn up the seat back trim cover and slit the pad from the back around to the place where the lock spring(2) of the guide bush(1) is.

   Then insert a finger through the slit and pull out the pillow while you are pressing down on the lock spring.

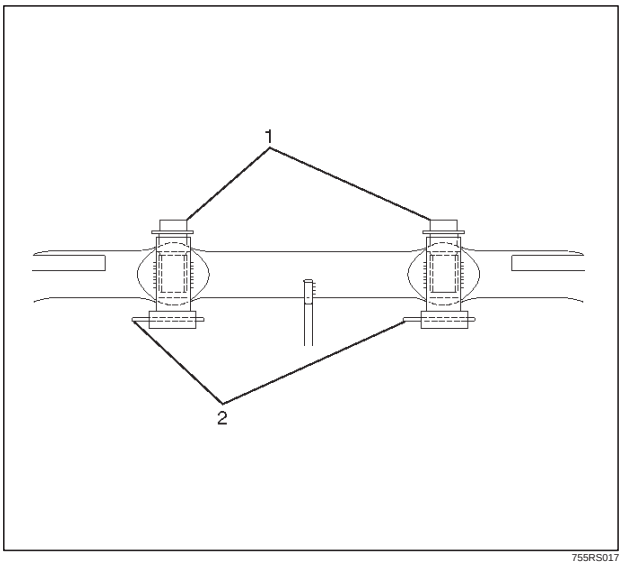

755RS017

10. Remove the armrest assembly.
    - Turn up the seat back trim cover and remove the fixing nuts.
11. Remove the armrest set bracket.
12. Remove the armrest board.
13. Remove the trim cover.
    - Remove the trim cover fixing hog rings from the backside of the seat back.
    - With close attention paid to the hog rings and the wire which connect the trim cover and the pad and frame assembly, remove the trim cover while turning it up.
14. Remove the pad & frame assembly.
15. Remove the seat cushion assembly.
16. Remove the seat lock cover.
17. Remove the rear seat belt buckle and lock assembly.
18. Remove the mounting bracket.
19. Remove the return spring.
20. Remove the spring collar.
21. Remove the trim cover.
    - Remove the hog rings and pull the trim cover out from the frame assembly groove.
    - With close attention paid to the hog rings and the wire which connect the trim cover and the pad & frame assembly, remove the trim cover while turning it up.
22. Remove the frame assembly.
23. Remove the pad assembly.
24. Remove the stopper rubber.

Downloaded from www.Manualslib.com manuals search engine

Reassembly (Split Type)

To reassemble, follow the disassembly steps in the reverse order, noting the following points.

1. Tighten the reclining device fixing bolts to the specified torque.

   Torque: 27 N·m (20 lb ft)

2. Loosen the rubber stopper lock nut(1). Adjust the stopper(3) so there is no clearance between the bottom of the stopper and the carpet(2) while you make sure the rear seat is firmly locked.

   Then tighten the lock nut securely.

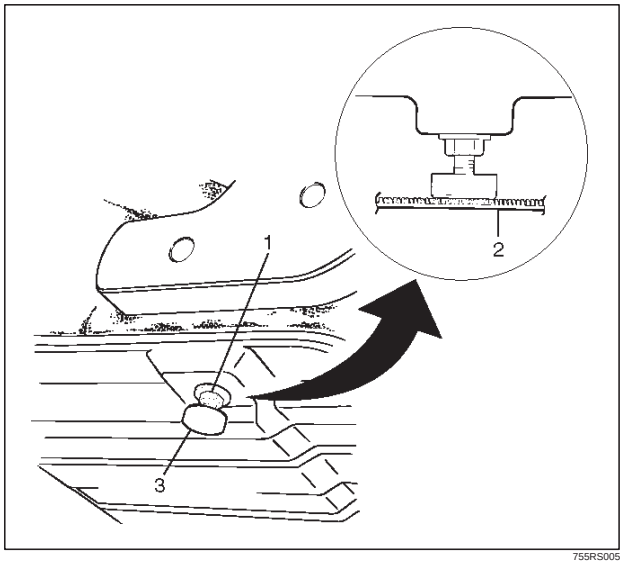

755RS005

Downloaded from www.Manualslib.com manuals search engine

Disassembled View (Bench Type)

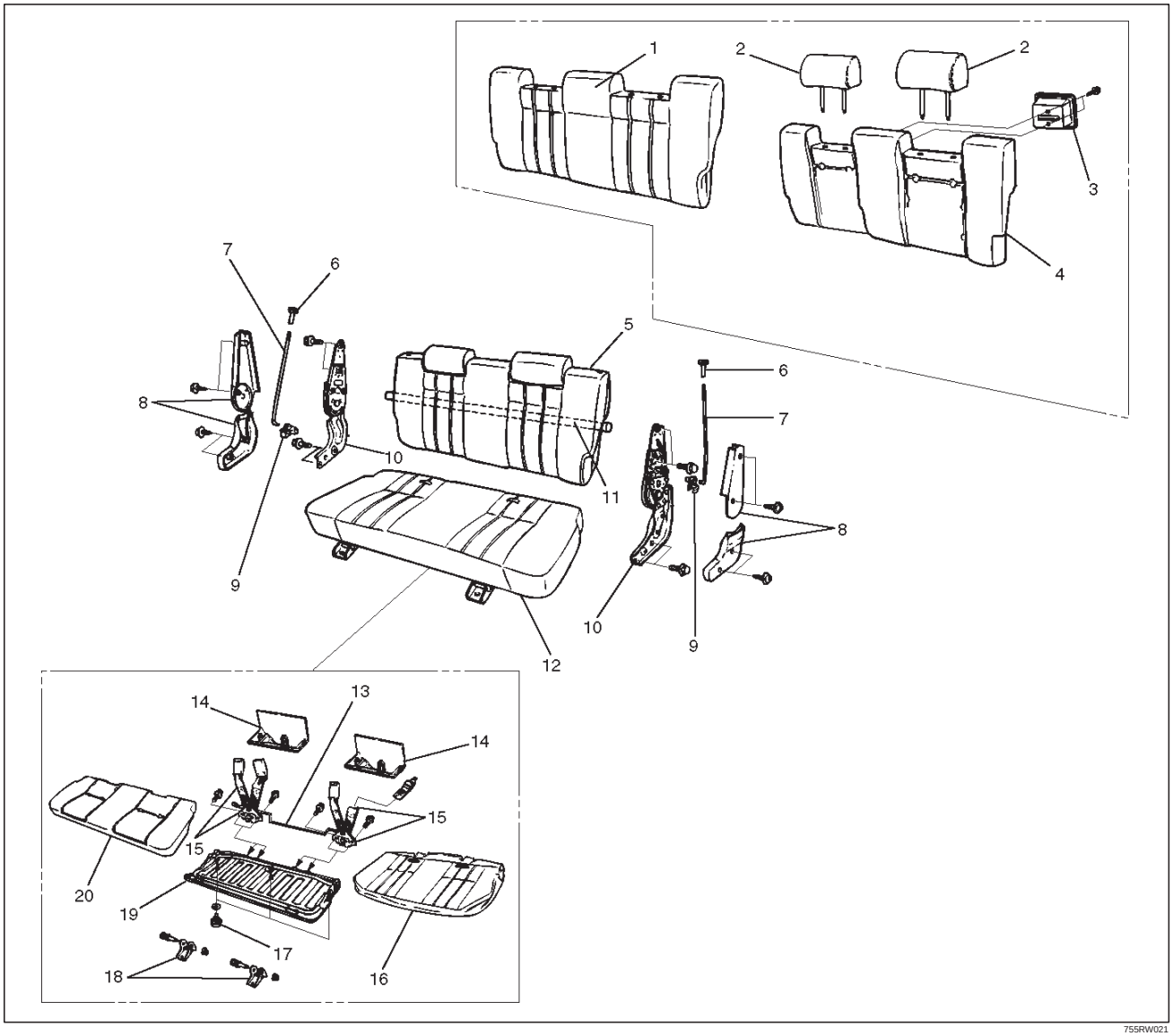

Legend

(1) Trim Cover
(2) Pillow Assembly
(3) Band Hook Cover
(4) Pad & Frame Assembly
(5) Seat Back Assembly
(6) Release Knob
(7) Release Rod
(8) Device Cover
(9) Linkage Bush
(10) Reclining Device
(11) Connecting Shaft
(12) Seat Cushion Assembly
(13) Connecting Link
(14) Seat Lock Cover
(15) Rear Seat Belt Buckle and Lock Assembly
(16) Trim Cover
(17) Stopper Rubber
(18) Mounting Bracket
(19) Frame Assembly
(20) Pad Assembly

Downloaded from www.Manualslib.com manuals search engine

Disassembly (Bench Type)

1. Remove the device cover.
2. Remove the release knob.
   - Turn the knob to the counterclockwise to remove it.
3. Remove the release rod.
   - Disconnect the rod from the linkage bush.
4. Remove the reclining device.

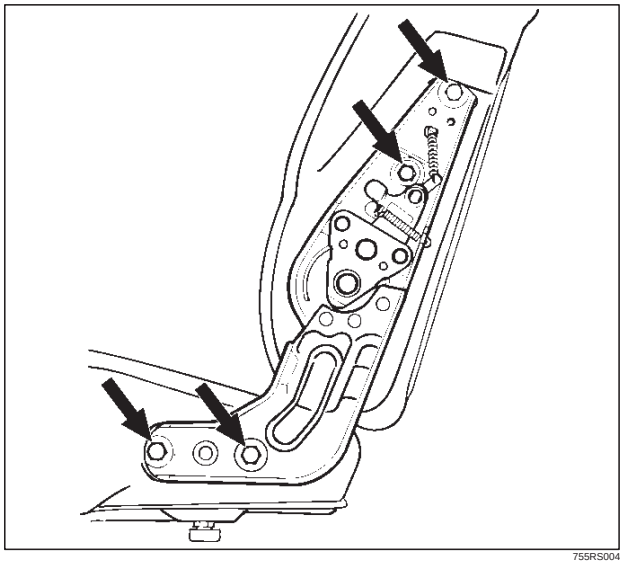

755RS004

5. Remove the connecting shaft.
6. Remove the seat back assembly.
7. Remove the band hook cover.
8. Remove the pillow assembly.
   - Refer to the Disassembly (Split Type) in this section.

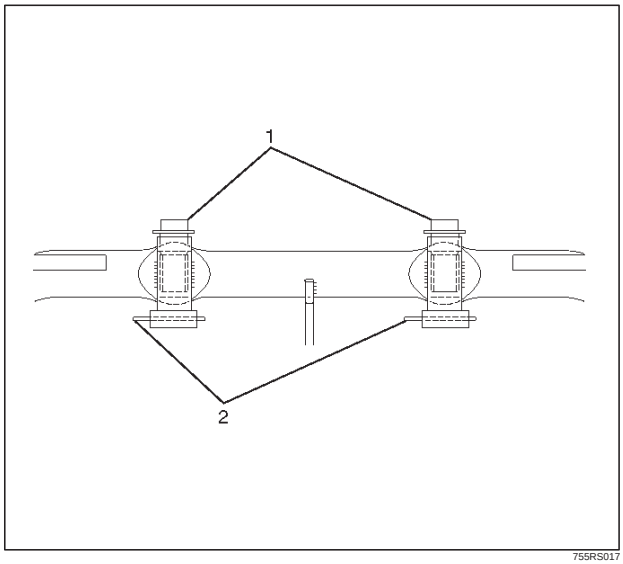

755RS017

9. Remove the trim cover.
   - Open the fastener(3), and with close attention paid to the hog rings and wire which connect the trim cover and the pad and frame assembly, remove the trim cover as you turn it up.

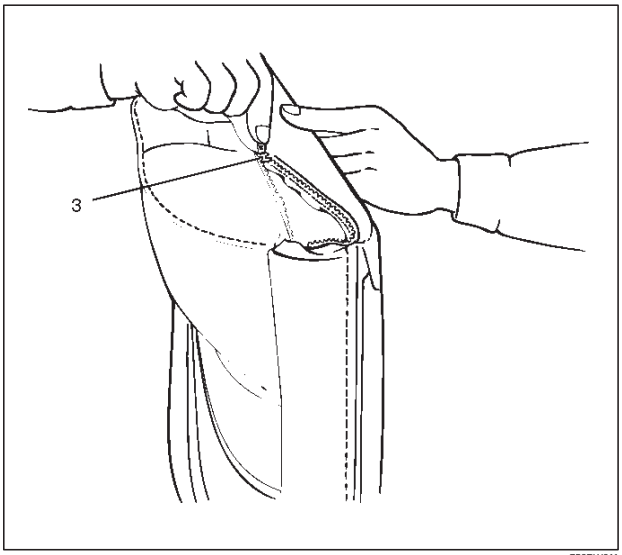

750RW011

10. Remove the pad & frame assembly.
11. Remove the seat cushion assembly.
12. Remove the seat lock cover.
13. Remove the rear seat belt buckle and lock assembly.
14. Remove the mounting bracket.
15. Remove the trim cover.
    - Remove the hog rings and pull the trim cover out from the frame assembly groove.
    - With close attention paid to the hog rings and the wire which connect the trim cover and the pad and frame assembly, remove the trim cover while turning it up.
16. Remove the frame assembly.
17. Remove the pad assembly.
18. Remove the stopper rubber.

Downloaded from www.Manualslib.com manuals search engine

Reassembly (Bench Type)

To reassemble, follow the disassembly steps in the reverse order, noting the following points.

1. Tighten the reclining device fixing bolts to the specified torque.

   Torque: 27 N·m (20 lb ft)

2. Loosen the rubber stopper lock nut(1) and adjust the stopper rubber(3) so there is no clearance between the bottom of the stopper and the carpet(2), while ensuring the rear seat is firmly locked.

   Tighten the lock nut securely.

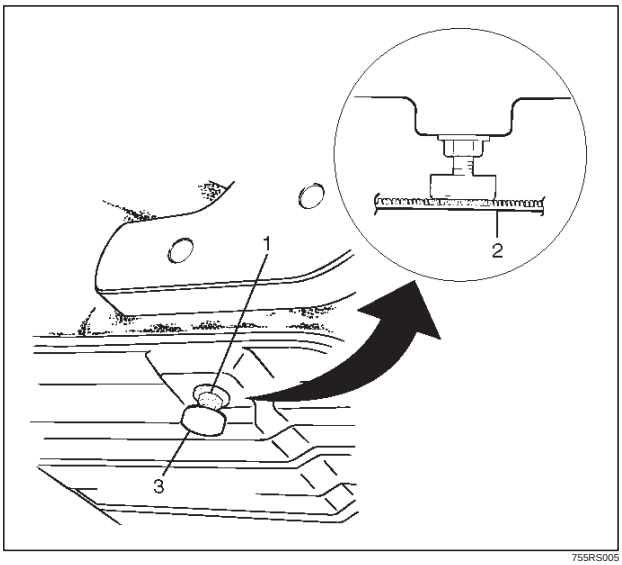

755RS005

Rear Seat Foot Rest

Rear Seat Foot Rest and Associated Parts

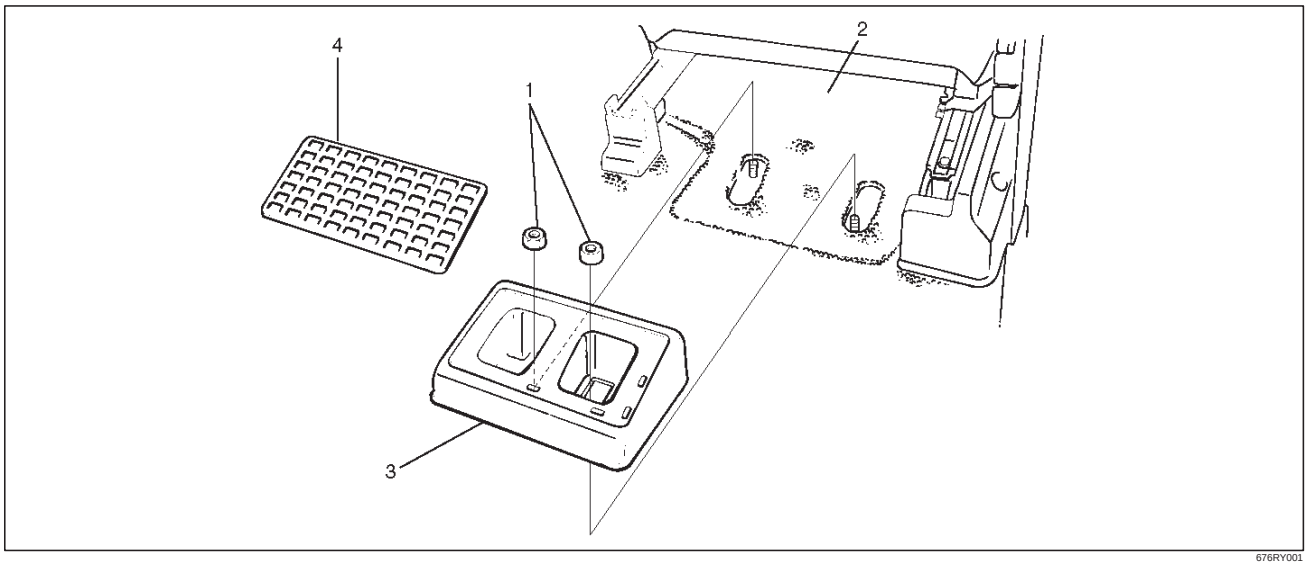

676RY001

Legend

(1) Fixing Nut
(2) Front Seat
(3) Rear Seat Foot Rest
(4) Foot Rest Pad

Downloaded from www.Manualslib.com manuals search engine

Removal

1. Remove the foot rest pad.

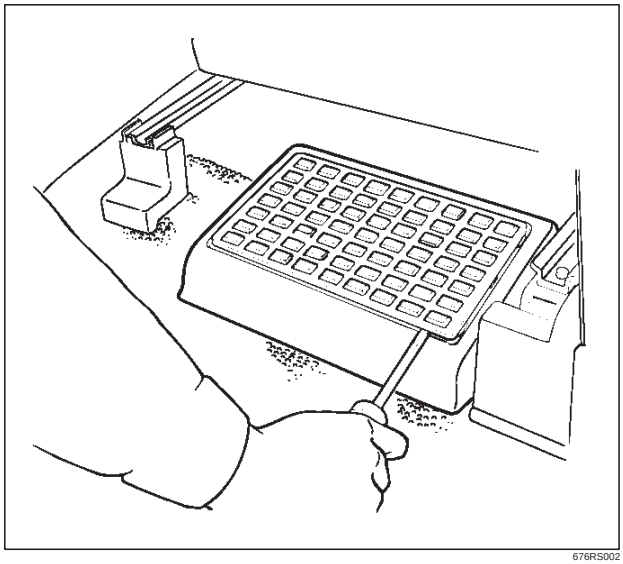

676RS002

2. Remove the fixing nut.
3. Remove the rear seat foot rest.

Installation

To install, follow the removal steps in the reverse order.

Main Data and Specifications

Torque Specifications

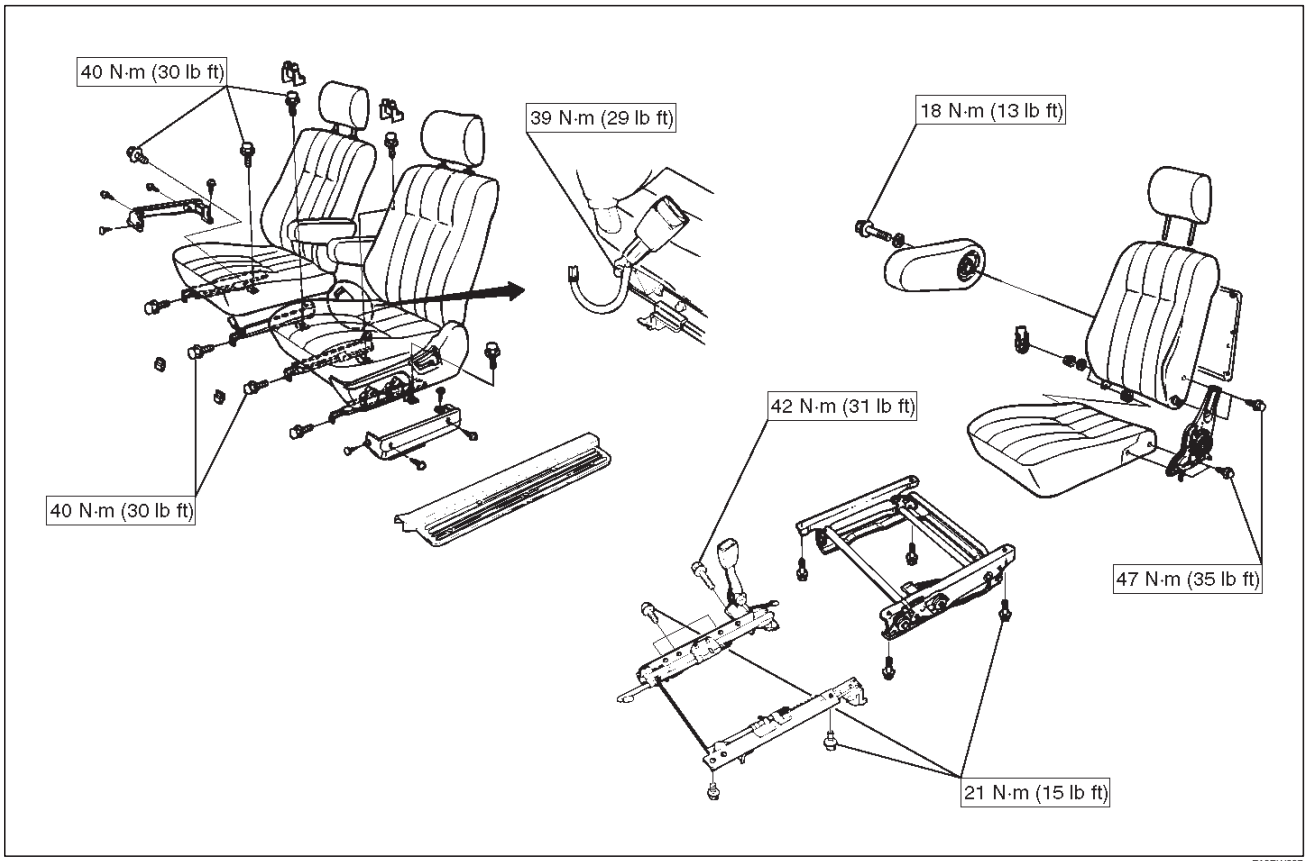

E10RW007

Downloaded from www.Manualslib.com manuals search engine

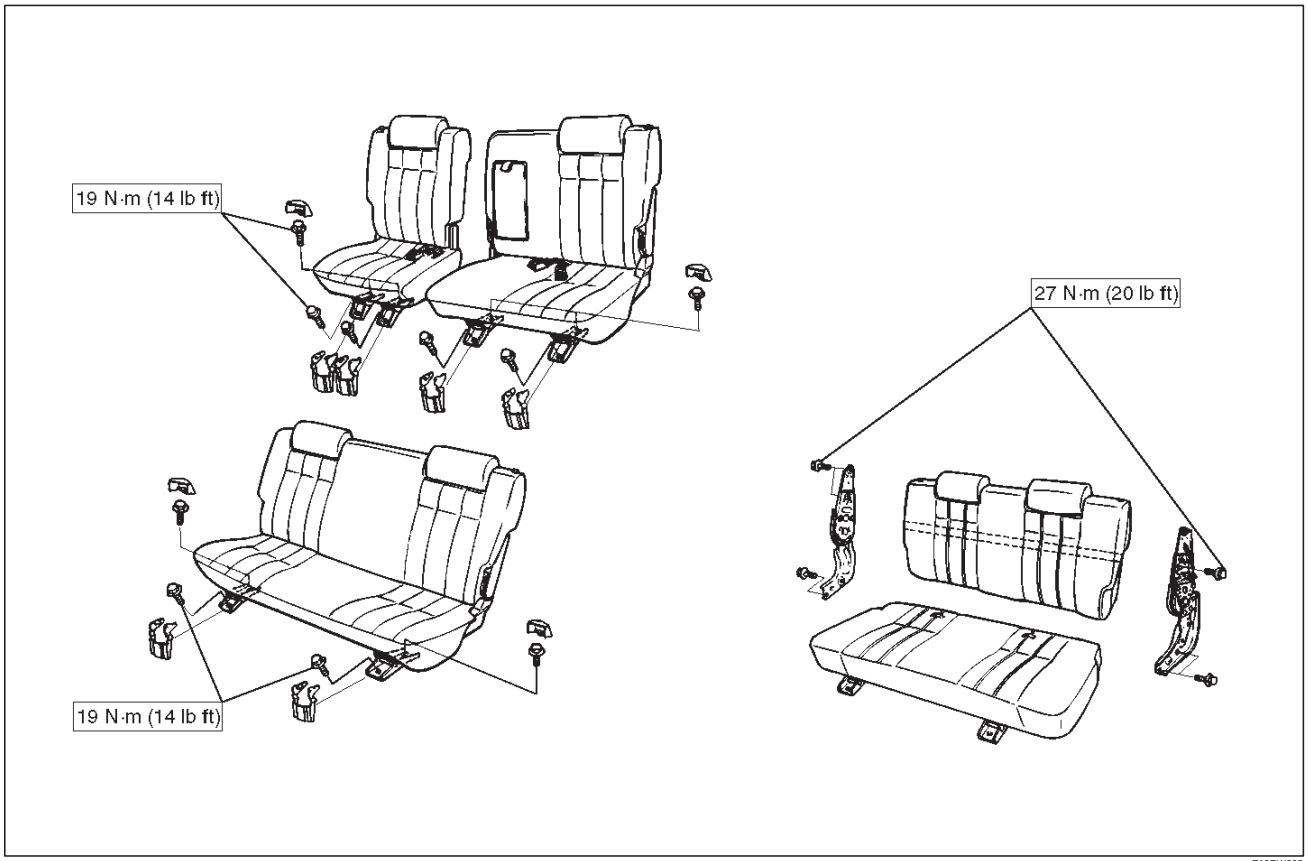

E10RW008

Downloaded from www.Manualslib.com manuals search engine

TROOPER

BODY AND ACCESSORIES

SECURITY AND LOCKS

CONTENTS

Service Precaution 8H–2
Front Door Lock Assembly 8H–2
Front Door Lock Assembly and Associated Parts 8H–2
Removal 8H–2
Installation 8H–3
Front Outside Handle and Door Lock Cylinder 8H–4
Front Outside Handle, Door Lock Cylinder and Associated Parts 8H–4
Removal 8H–4
Installation 8H–6
Rear Door Lock Assembly 8H–7
Rear Door Lock Assembly and Associated Parts 8H–7
Removal 8H–7
Installation 8H–8
Rear Outside Handle 8H–9
Rear Outside Handle and Associated Parts 8H–9
Removal 8H–9
Installation 8H–10
Rear Door Inside Lock Knob Link 8H–10
Removal 8H–10
Installation 8H–10
Door Inside Lock Knob 8H–11
Removal 8H–11
Installation 8H–11
Door Inside Handle 8H–11
Removal and Installation 8H–11
Tailgate Lock Assembly (LH) 8H–12
Tailgate Lock Assembly (LH) and Associated Parts 8H–12
Removal 8H–12
Installation 8H–13
Tailgate Lock Assembly (RH) 8H–14
Tailgate Lock Assembly (RH) and Associated Parts 8H–14
Removal 8H–14
Installation 8H–15
Tailgate Inside Lock Knob 8H–16
Removal 8H–16
Installation 8H–16
Tailgate Outside Handle and/or Tailgate Lock Cylinder 8H–17
Tailgate Outside Handle and/or Tailgate Lock Cylinder and Associated Parts 8H–17
Removal 8H–17
Installation 8H–18
Key 8H–19
Key Coding 8H–19
Key Styles 8H–19
Power Door Lock System 8H–20
General Description 8H–20
Front Door Lock Actuator Removal 8H–20
Front Door Lock Actuator Installation 8H–20
Rear Door Lock Actuator Removal 8H–20
Rear Door Lock Actuator Installation 8H–21
Tailgate Lock Actuator Removal 8H–21
Tailgate Lock Actuator Installation 8H–21
Anti-theft System 8H–22
General Description 8H–22
Anti-theft & Keyless Entry Control Unit Removal 8H–22
Anti-theft & Keyless Entry Control Unit Installation 8H–22
Anti-theft Indicator Removal 8H–22
Anti-theft Indicator Installation 8H–23
Anti-theft Horn Removal 8H–23
Anti-Theft Horn Installation 8H–23
Engine Hood Switch Removal 8H–23
Engine Hood Switch Installation 8H–23
Keyless Entry System 8H–24
ID Code Registration 8H–24
Anti–theft & Keyless Entry Control Unit /Transmitter Replacement 8H–26
Main Data and Specifications 8H–27

Downloaded from www.Manualslib.com manuals search engine

Service Precaution

WARNING: THIS VEHICLE HAS A SUPPLEMENTAL RESTRAINT SYSTEM (SRS). REFER TO THE SRS COMPONENT AND WIRING LOCATION VIEW IN ORDER TO DETERMINE WHETHER YOU ARE PERFORMING SERVICE ON OR NEAR THE SRS COMPONENTS OR THE SRS WIRING. WHEN YOU ARE PERFORMING SERVICE ON OR NEAR THE SRS COMPONENTS OR THE SRS WIRING, REFER TO THE SRS SERVICE INFORMATION. FAILURE TO FOLLOW WARNINGS COULD RESULT IN POSSIBLE AIR BAG DEPLOYMENT, PERSONAL INJURY, OR OTHERWISE UNNEEDED SRS SYSTEM REPAIRS.

CAUTION: Always use the correct fastener in the proper location. When you replace a fastener, use ONLY the exact part number for that application. ISUZU will call out those fasteners that require a replacement after removal. ISUZU will also call out the fasteners that require thread lockers or thread sealant. UNLESS OTHERWISE SPECIFIED, do not use supplemental coatings (Paints, greases, or other corrosion inhibitors) on threaded fasteners or fastener joint interfaces. Generally, such coatings adversely affect the fastener torque and the joint clamping force, and may damage the fastener. When you install fasteners, use the correct tightening sequence and specifications. Following these instructions can help you avoid damage to parts and systems.

Front Door Lock Assembly

Front Door Lock Assembly and Associated Parts

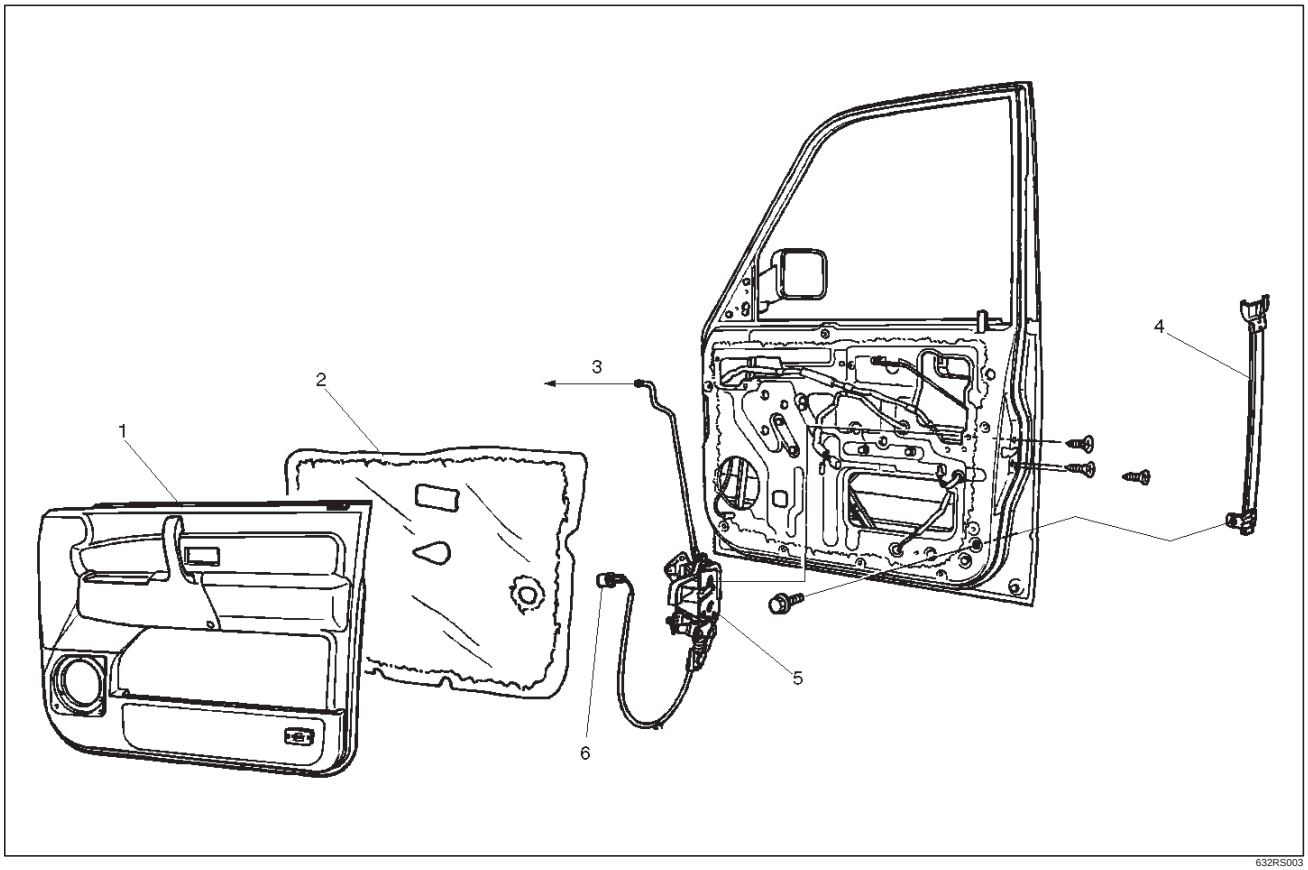

632RS003

Legend

(1) Door Trim Panel
(2) Waterproof Sheet
(3) To Outside Handle
(4) Rear Guide Rail
(5) Door Lock Assembly
(6) Door Lock Switch Connector (W/Power Door Lock)

Removal

1. Disconnect the battery ground cable.
2. Remove the door trim panel.
3. Remove the waterproof sheet.
   - Refer to the Front Window Regulator, Glass And Glass Run in Body Structure section.

Downloaded from www.Manualslib.com manuals search engine

4. Raise the glass up to the uppermost position, and then remove the rear guide rail.
5. Disconnect the door lock switch connector (w/power door lock) and locking links (arrow marks positions), then remove the door lock assembly fixing screws and door lock assembly.

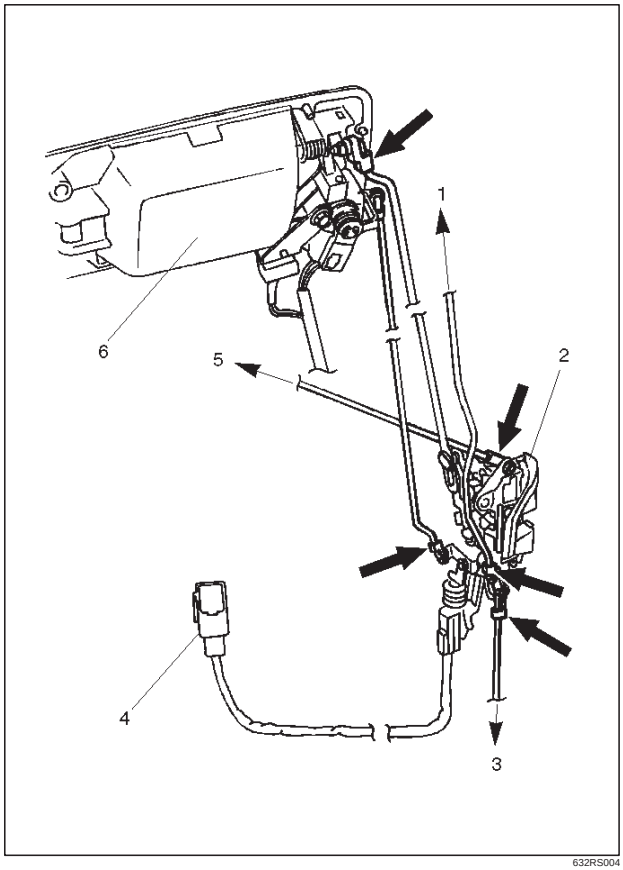

632RS004

Legend

(1) To Inside Lock Knob
(2) Door Lock Assembly
(3) To Actuator
(4) Door Lock Switch Connector
(5) To Inside Handle
(6) Outside Handle

Installation

To install, follow the removal steps in the reverse order, noting the following points.

1. Apply chassis grease to the lock assembly and striker moving surface.
2. Tighten the door lock assembly fixing screws to the specified torque.

   Torque: 7 N·m (61 lb in)

3. Check that the door lock operates smoothly.

Downloaded from www.Manualslib.com manuals search engine

Front Outside Handle and Door Lock Cylinder

Front Outside Handle, Door Lock Cylinder and Associated Parts

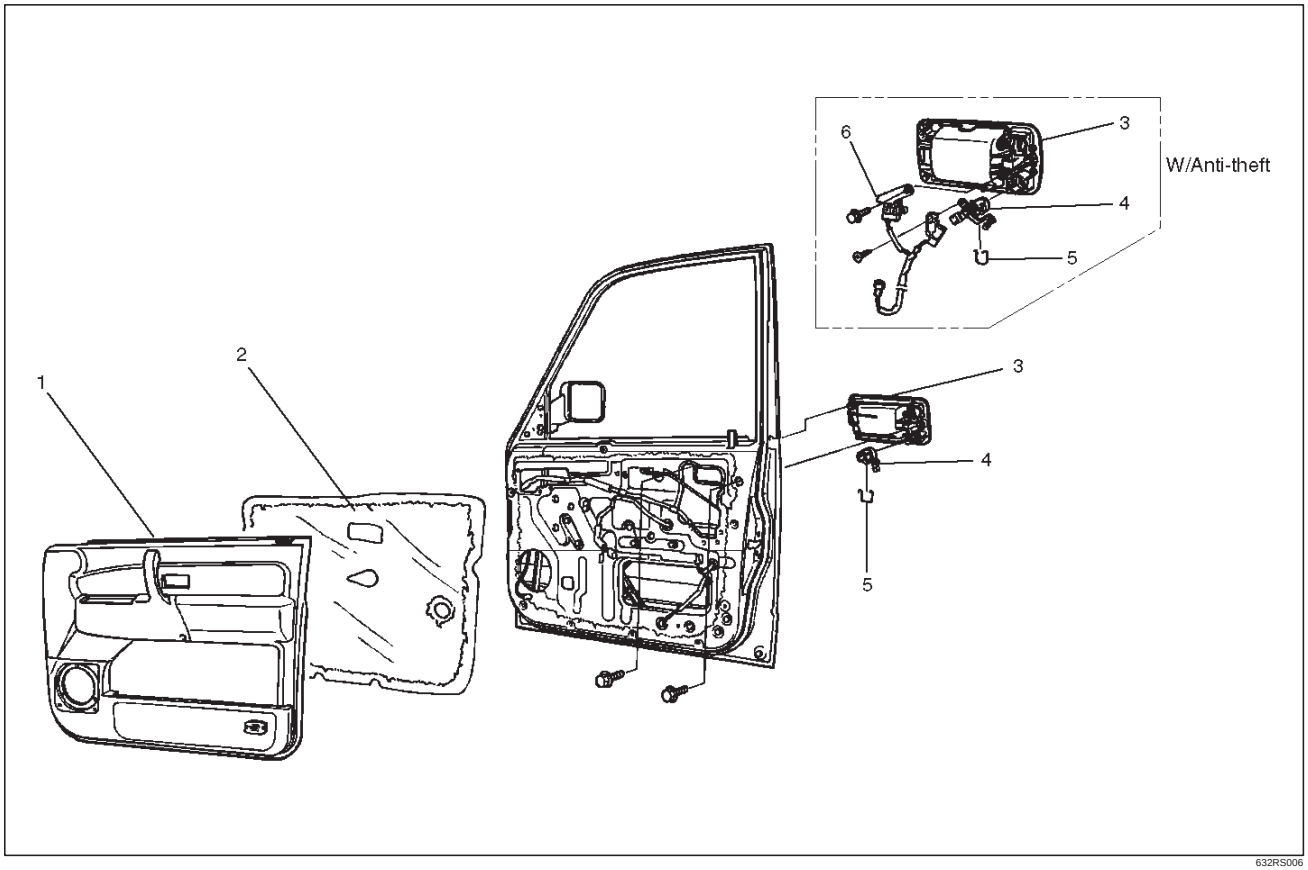

632RS006

Legend

(1) Door Trim Panel
(2) Waterproof Sheet
(3) Outside Handle
(4) Door Lock Cylinder
(5) Clip
(6) Key Switch (W/Anti-Theft)

Removal

1. Disconnect the battery ground cable.
2. Remove the door trim panel.
3. Remove the waterproof sheet.
   - Refer to the Front Window Regulator, Glass And Glass Run in Body Structure section.

Downloaded from www.Manualslib.com manuals search engine

4. Disconnect the locking links (arrow marks positions) and key switch connector (w/anti-theft) to remove the outside handle.

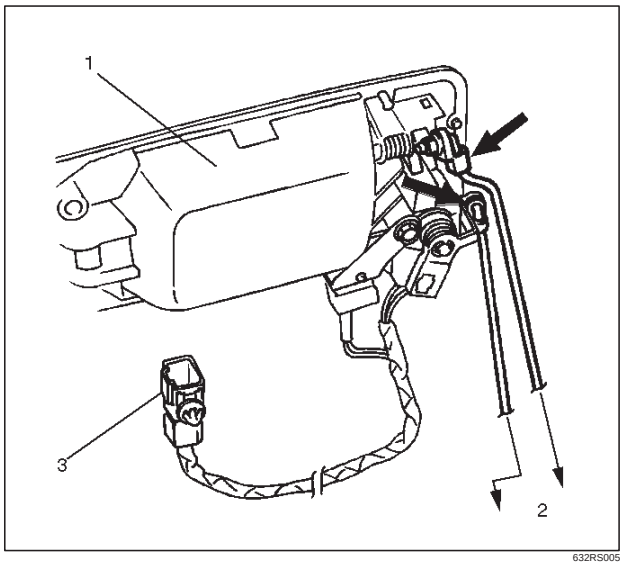

632RS005

Legend

(1) Outside Handle
(2) To Door Lock Assembly
(3) Key Switch Connector

5. Remove the key Switch.

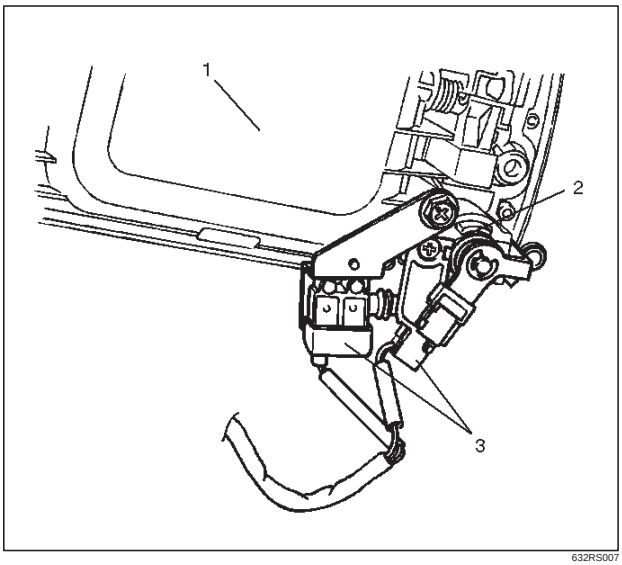

632RS007

Legend

(1) Outside Handle
(2) Lock Cylinder
(3) Key Switch

6. Remove the fixing clip(1) to remove the door lock cylinder(2).

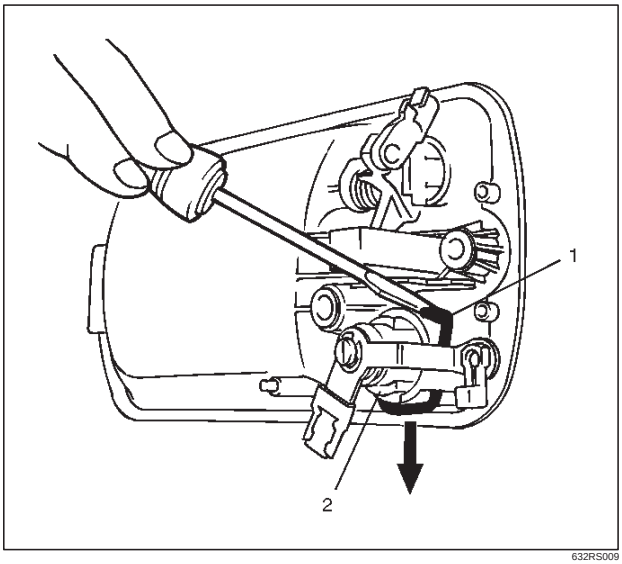

632RS009

Downloaded from www.Manualslib.com manuals search engine

Installation

To install, follow the removal steps in the reverse order, noting the following points.

1. Be sure to install the door lock cylinder(2) at a right angle to the outside handle(1).

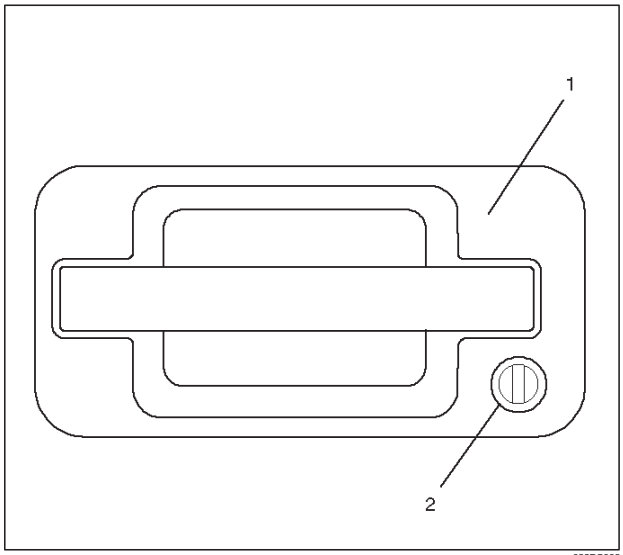

632RS008

2. For the anti-theft system, be sure to install the push rod(3) of key switch while pressing it to the door lock cylinder(5) so that there is no continuity between the key switch(4) side connector terminal No. D6–2 and D6–4 (No. D16–2 and D16–4: passenger side).

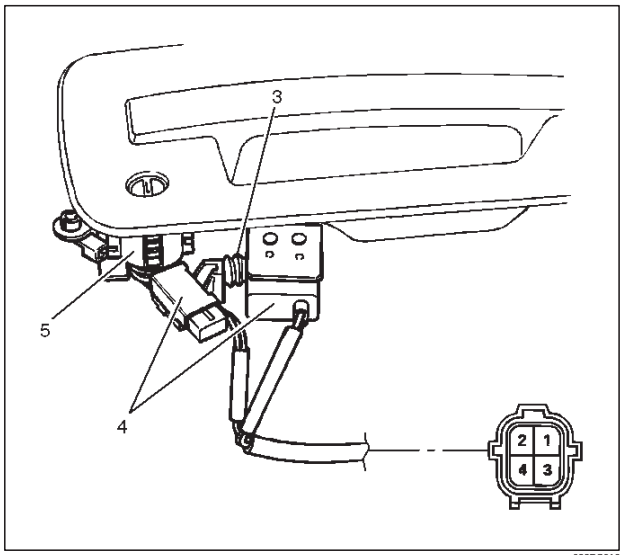

632RS010

3. Tighten the outside handle and key switch fixing bolts to the specified torque.

   Torque: 9 N·m (78 lb in)

4. Check for smooth outside handle and lock cylinder operation.

Downloaded from www.Manualslib.com manuals search engine

Rear Door Lock Assembly

Rear Door Lock Assembly and Associated Parts

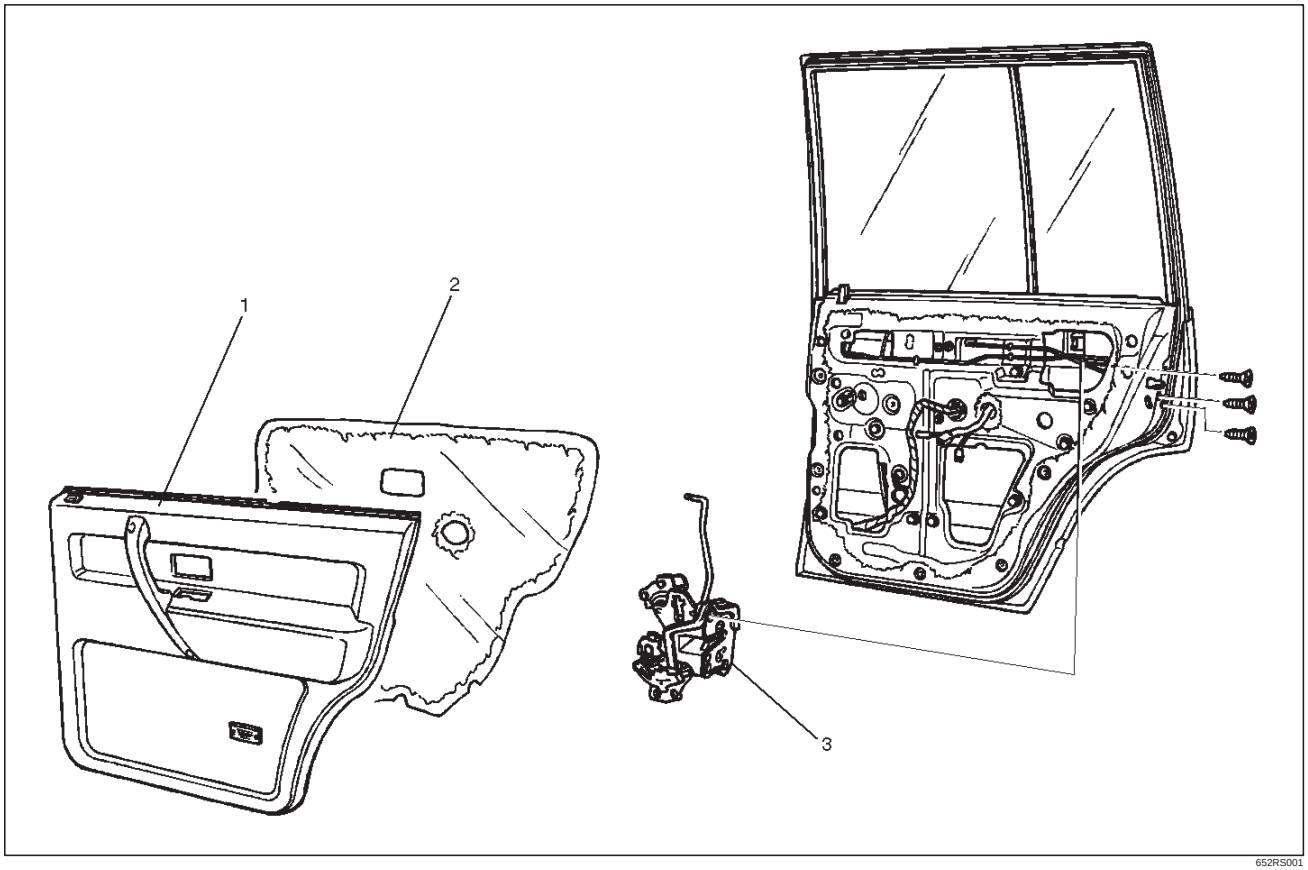

652RS001

Legend

(1) Door Trim Panel
(2) Waterproof Sheet
(3) Door Lock Assembly

Removal

1. Disconnect the battery ground cable.
2. Remove the door trim panel.
3. Remove the waterproof sheet.
   - Refer to the Rear Window Regulator And Glass in Body Structure section.

Downloaded from www.Manualslib.com manuals search engine

4. Disconnect the locking links (arrow marks positions) and remove the fixing screws to remove the door lock assembly.

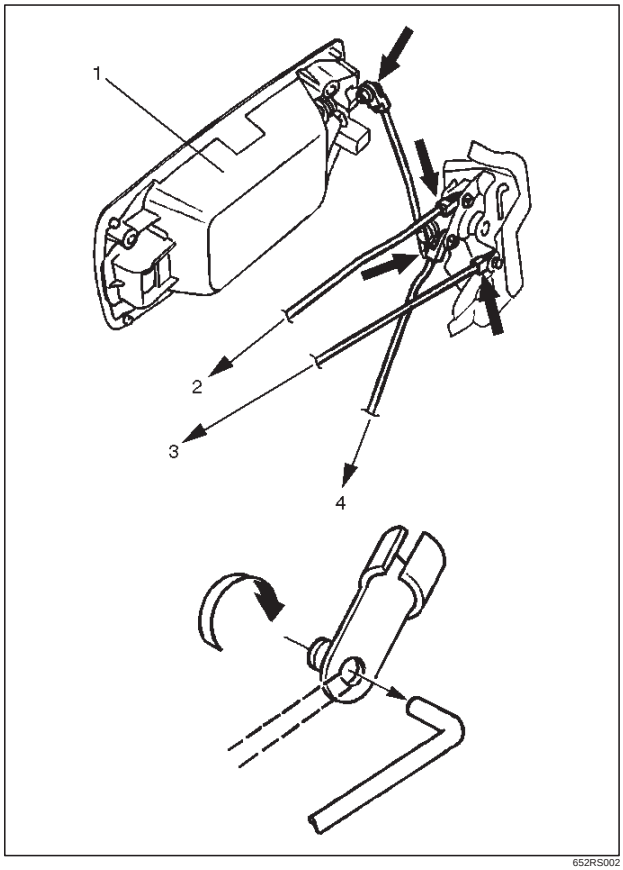

652RS002

Legend

(1) Outside Handle
(2) To Inside Lock Knob
(3) To Inside Handle
(4) To Actuator

Installation

To install, follow the removal steps in the reverse order, noting the following points.

1. Apply chassis grease to the lock assembly and striker moving surface.
2. Tighten the door lock assembly fixing screws to the specified torque.

   Torque: 7 N·m (61 lb in)

3. Check that the door lock operates smoothly.

Downloaded from www.Manualslib.com manuals search engine

Rear Outside Handle

Rear Outside Handle and Associated Parts

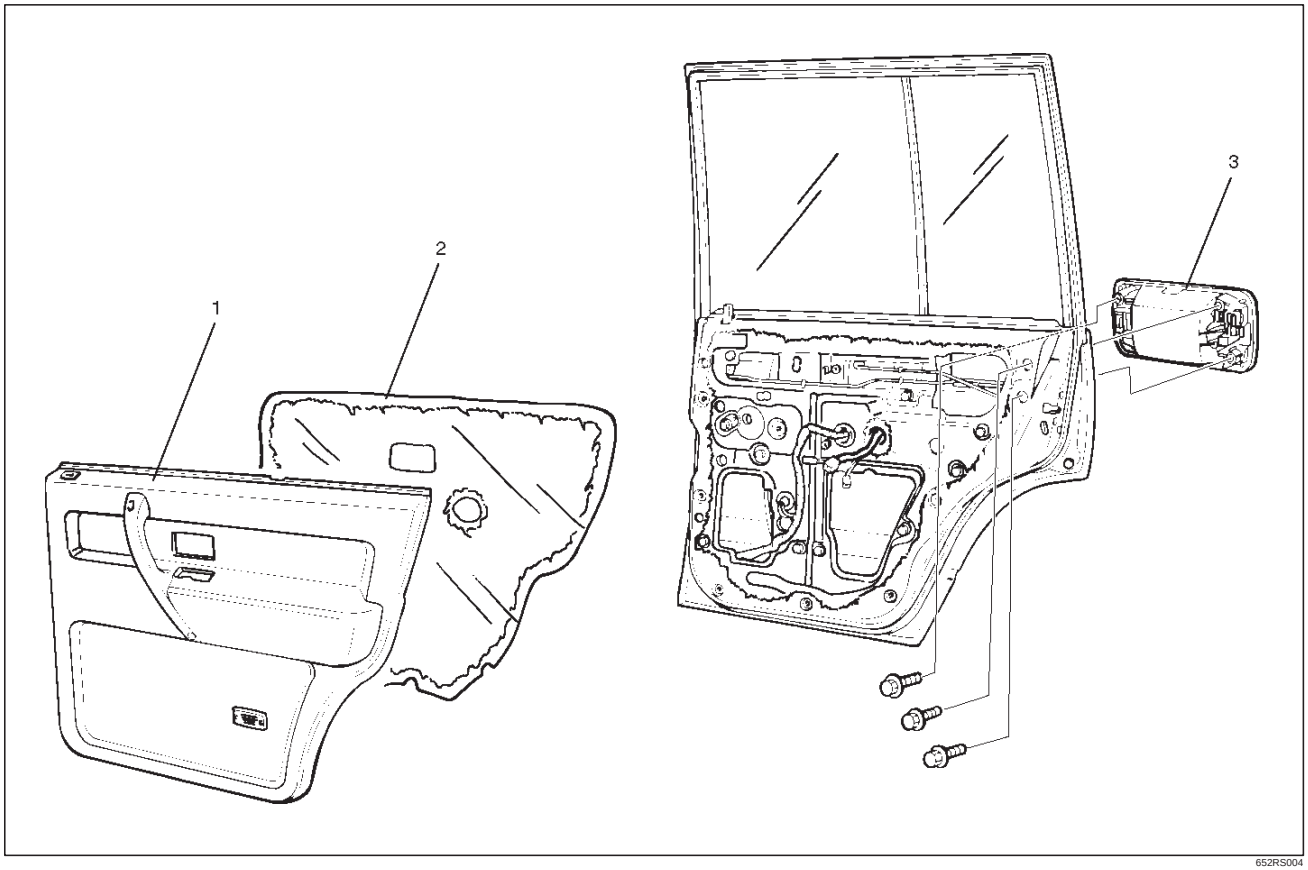

652RS004

Legend

(1) Door Trim Panel
(2) Waterproof Sheet
(3) Outside Handle

Removal

1. Disconnect the battery ground cable.
2. Remove the door trim panel.
3. Remove the waterproof sheet.
   - Refer to the Rear Window Regulator And Glass in Body Structure section.
4. Disconnect the locking link (arrow mark position) and remove three fixing bolts to remove the outside handle.

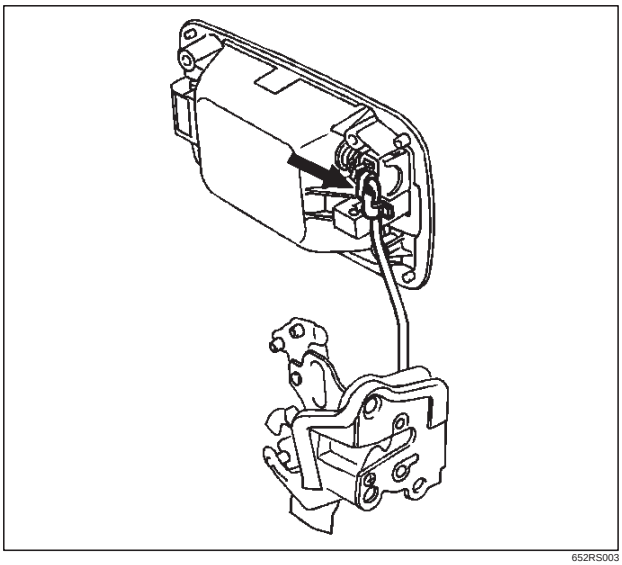

652RS003

Downloaded from www.Manualslib.com manuals search engine

Installation

To install, follow the removal steps in the reverse order, noting the following points.

1. Tighten the outside handle fixing bolts to the specified torque.

   Torque: 9 N·m (78 lb in)

2. Check that the outside handle operates smoothly.

Rear Door Inside Lock Knob Link

Removal

1. Disconnect the battery ground cable.
2. Remove the door trim panel(3).
3. Remove the waterproof sheet(2).
   - Refer to the Rear Window Regulator And Glass in Body Structure section.
4. Remove the fixing screw(4) and disconnect the locking link at the door lock assembly to remove the rear door inside lock knob link(1).

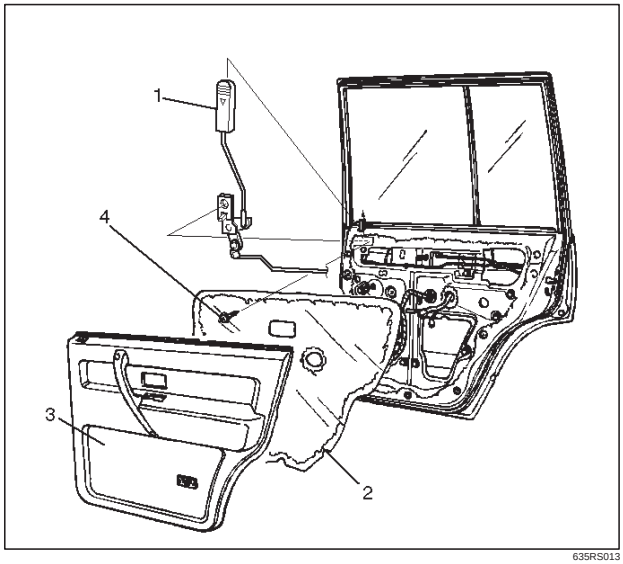

635RS013

Installation

To install, follow the removal steps in the reverse order.

Downloaded from www.Manualslib.com manuals search engine

Door Inside Lock Knob

Removal

1. Disconnect the battery ground cable.
2. Remove the door trim panel(1).
   - Refer to the Front / Rear Door Trim Panel in Exterior/Interior Trim section.
3. Turn the door inside lock knob counterclockwise and then remove the door inside lock knob (2).

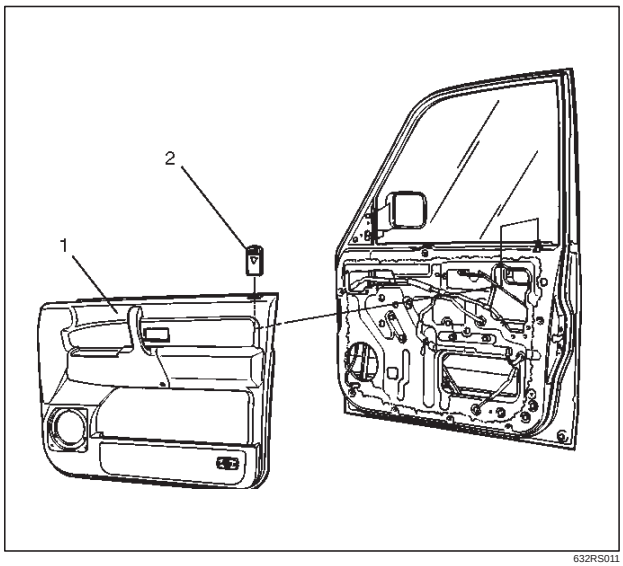

632RS011

Installation

To install, follow the removal steps in the reverse order.

Door Inside Handle

Removal and Installation

- Refer to the Front/Rear Door Trim Panel in Exterior/Interior Trim section.

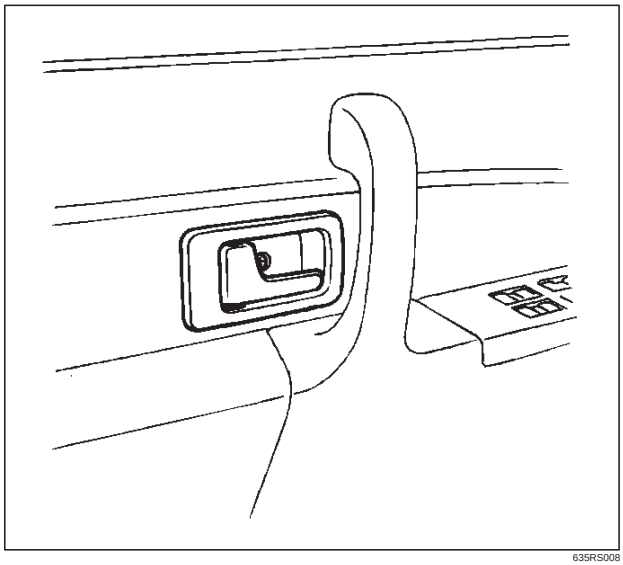

635RS008

Downloaded from www.Manualslib.com manuals search engine

Tailgate Lock Assembly (LH)

Tailgate Lock Assembly (LH) and Associated Parts

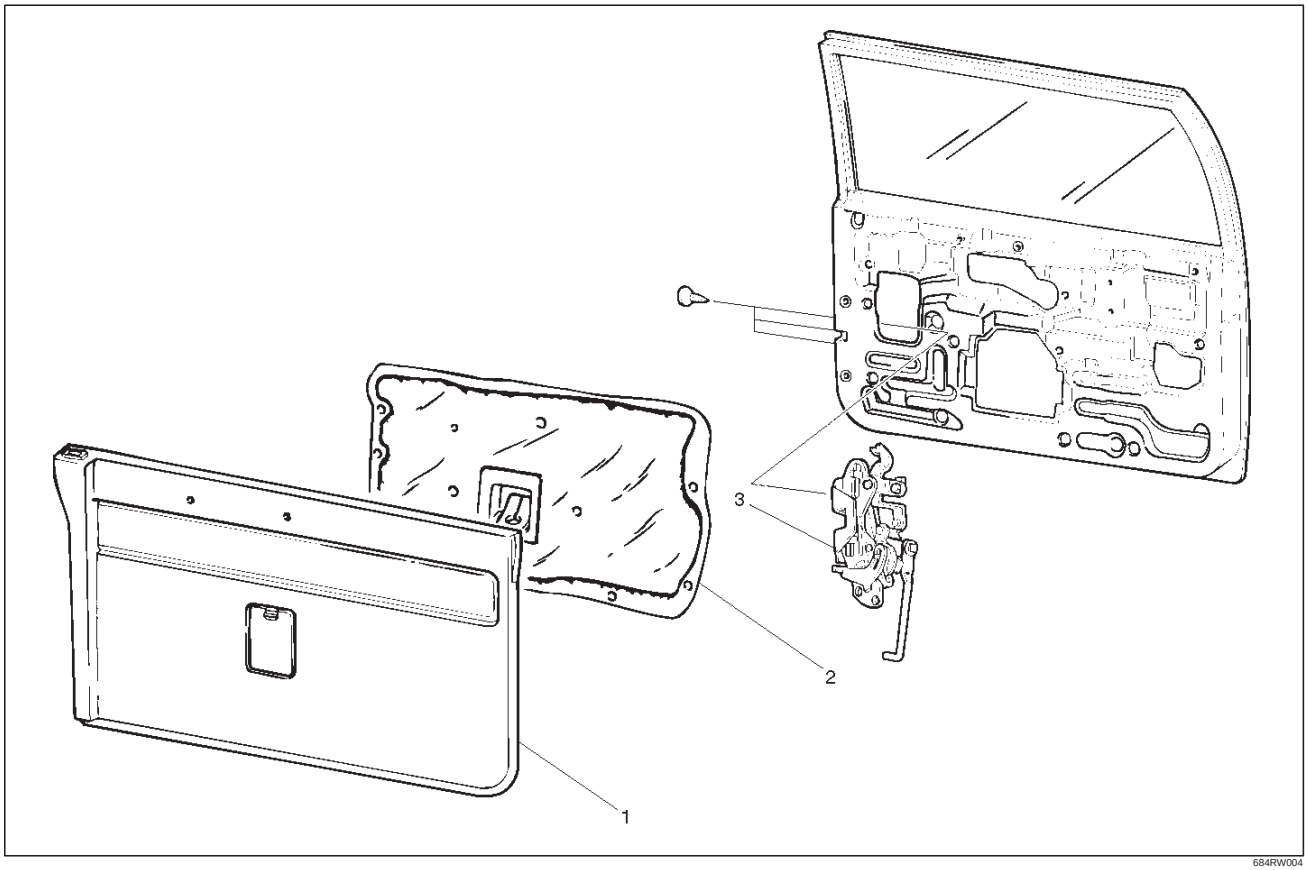

684RW004

Legend

(1) Tailgate Trim Panel(LH)
(2) Waterproof Sheet
(3) Tailgate Lock Assembly

Removal

1. Disconnect the battery ground cable.
2. Remove the tailgate trim panel (LH).
   - Refer to the Tailgate Trim Panel (LH) in Exterior/Interior Trim section.
3. Taking notice of the tailgate harness, peel the waterproof sheet off the tailgate panel carefully and then remove the waterproof sheet.

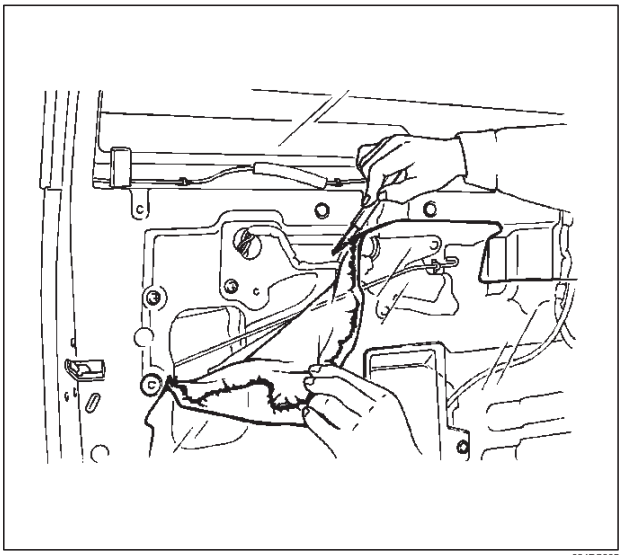

684RS005

Downloaded from www.Manualslib.com manuals search engine

4. Disconnect the locking links (arrow marks positions), remove three fixing screws and then remove the tailgate lock assembly (LH).

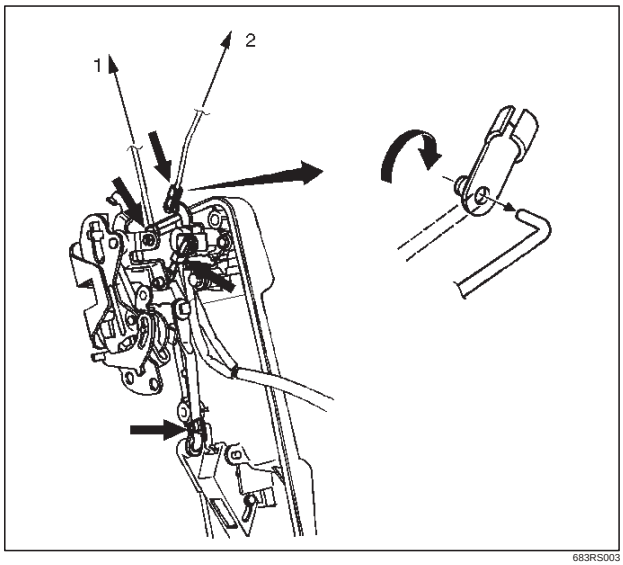

683RS003

Legend

(1) To Inside Lock Knob
(2) To Actuator

Installation

To install, follow the removal steps in the reverse order, noting the following points.

1. Apply chassis grease to the lock assembly and striker moving surface.
2. Tighten the tailgate lock assembly fixing screws to the specified torque.

   Torque: 7 N·m (61 lb in)

3. Check that the tailgate lock operates correctly after installing it.

Downloaded from www.Manualslib.com manuals search engine

Tailgate Lock Assembly (RH)

Tailgate Lock Assembly (RH) and Associated Parts

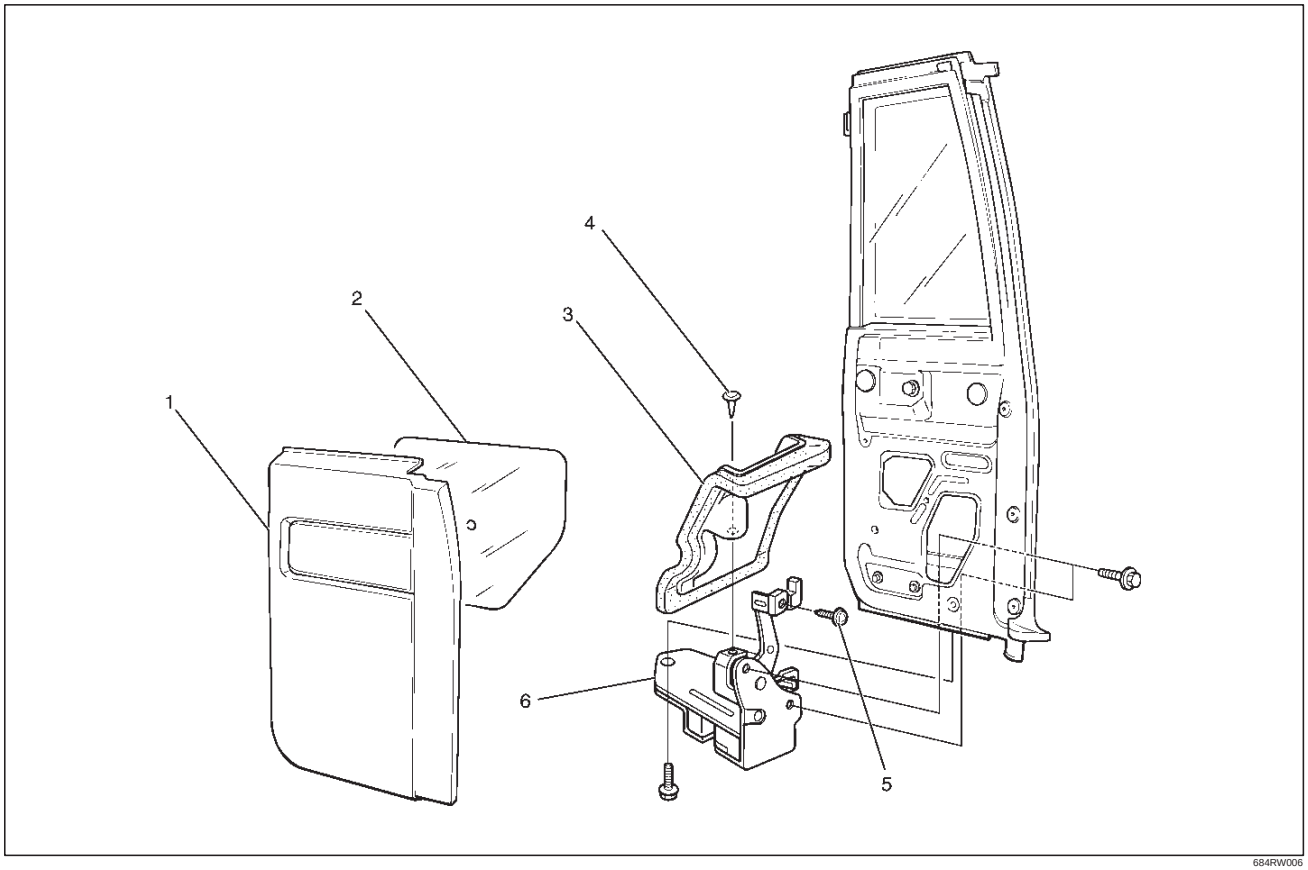

684RW006

Legend

(1) Tailgate Trim Panel (RH)
(2) Waterproof Sheet
(3) Tailgate Lock Seal
(4) Clip
(5) Screw
(6) Tailgate Lock Assembly (RH)

Removal

1. Disconnect the battery ground cable.
2. Remove the tailgate trim panel (RH).
   - Refer to Tailgate Trim Panel (RH) in Exterior/Interior Trim section.
3. Peel the waterproof sheet off the tailgate panel carefully and then remove the waterproof sheet.
4. Remove three fixing bolts and then remove the tailgate lock assembly (RH).

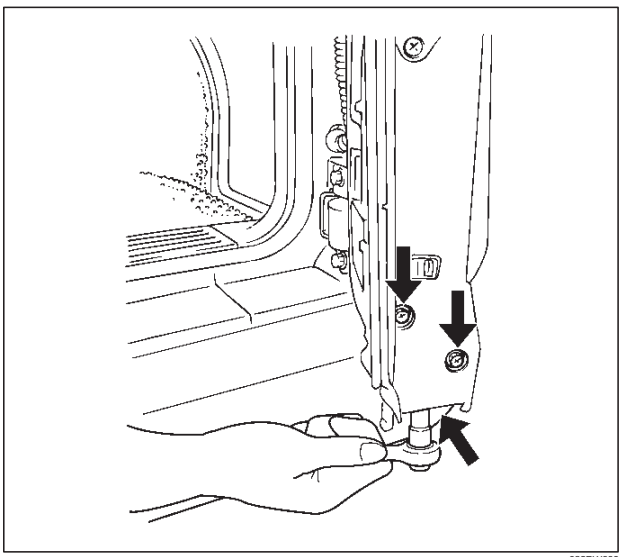

683RW009

Downloaded from www.Manualslib.com manuals search engine

5. Remove the tailgate lock seal fixing clip(1) and then remove the tailgate lock seal(2).

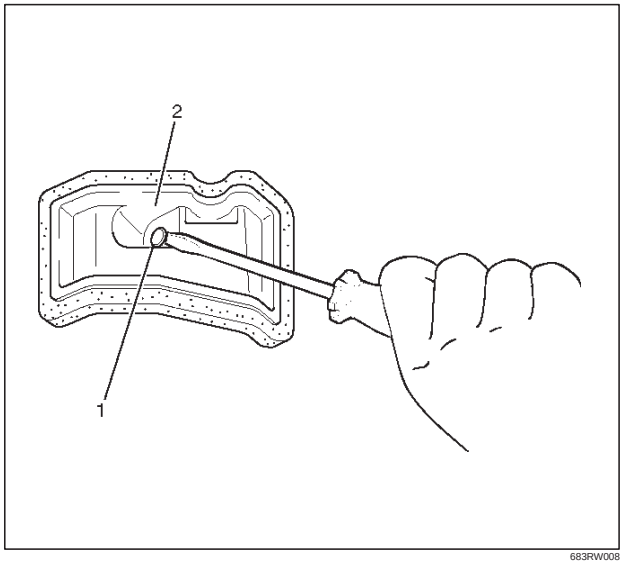

683RW008

Installation

To install, follow the removal steps in the reverse order, noting the following points.

1. Apply chassis grease to the lock assembly and striker moving surface.
2. Tighten the tailgate lock assembly fixing bolts to the specified torque.

   Torque: 11 N·m (95 lb in)

3. Check that the tailgate lock operates correctly after installing it.

Downloaded from www.Manualslib.com manuals search engine

Tailgate Inside Lock Knob

Removal

1. Disconnect the battery ground cable.
2. Remove the tailgate trim panel (LH)(2).
   - Refer to the Tailgate Trim Panel (LH) in Exterior/Interior Trim section.
3. Take care of cushion to turn the lock knob counterclockwise and then remove the tailgate inside lock knob(1).

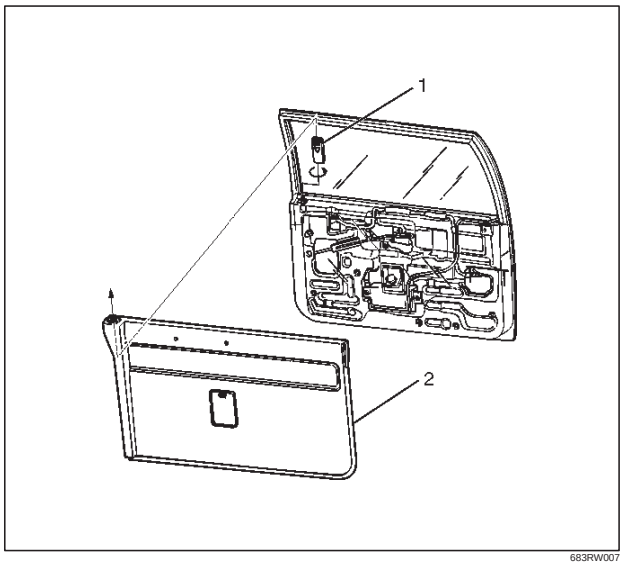

683RW007

Installation

To install, follow the removal steps in the reverse order.

Downloaded from www.Manualslib.com manuals search engine

Tailgate Outside Handle and/or Tailgate Lock Cylinder

Tailgate Outside Handle and/or Tailgate Lock Cylinder and Associated Parts

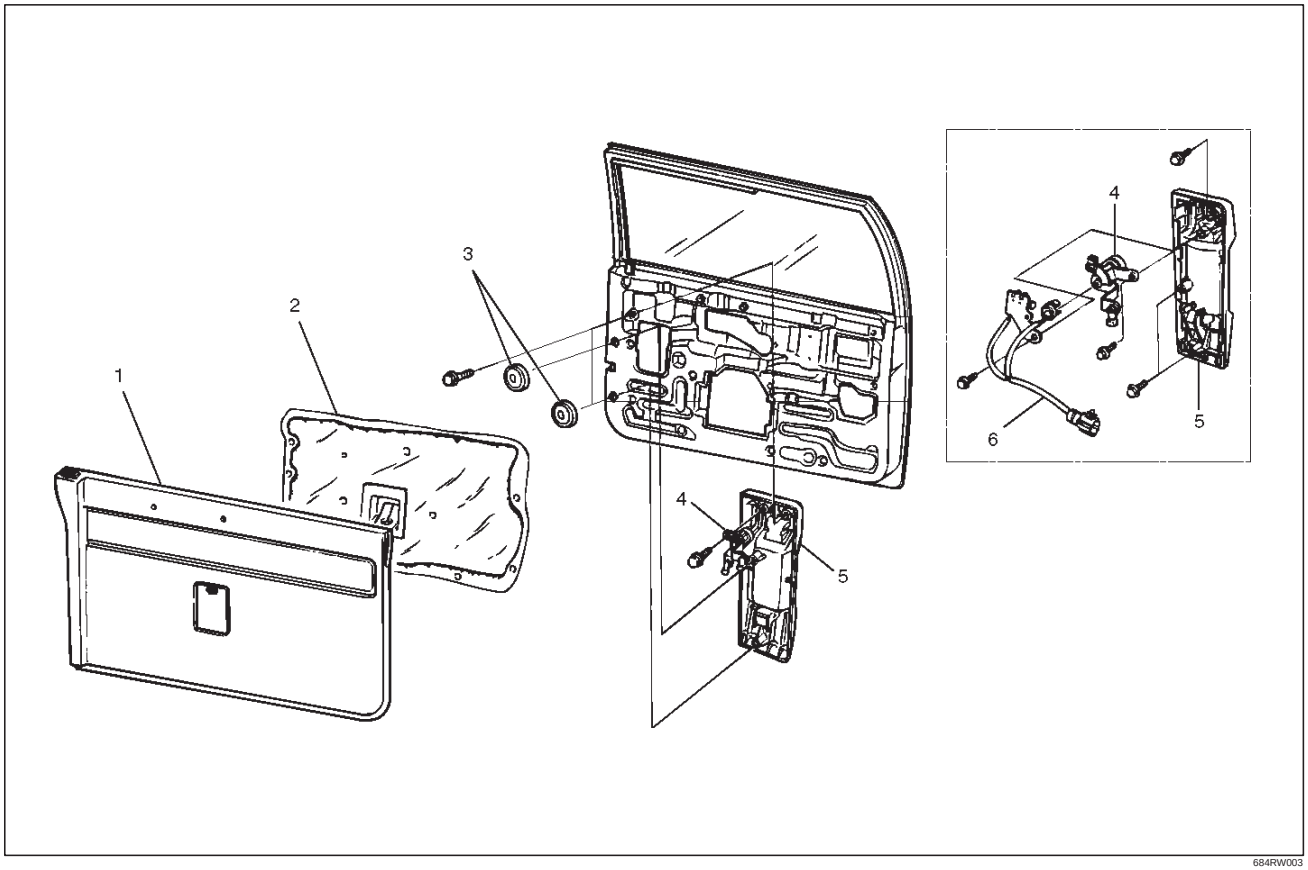

684RW003

Legend

(1) Tailgate Trim Panel (LH)
(2) Waterproof Sheet
(3) Grommet
(4) Tailgate Lock Cylinder
(5) Tailgate Outside Handle
(6) Key Switch

Removal

1. Disconnect the battery ground cable.
2. Remove the tailgate trim panel.
3. Remove the waterproof sheet.
   - Refer to the Tailgate Lock Assembly (LH) in this section.
4. Remove the grommet.

Downloaded from www.Manualslib.com manuals search engine

5. Disconnect the locking links (arrow marks positions), key switch connector (w/anti-theft) and remove three fixing bolts to remove the tailgate outside handle.

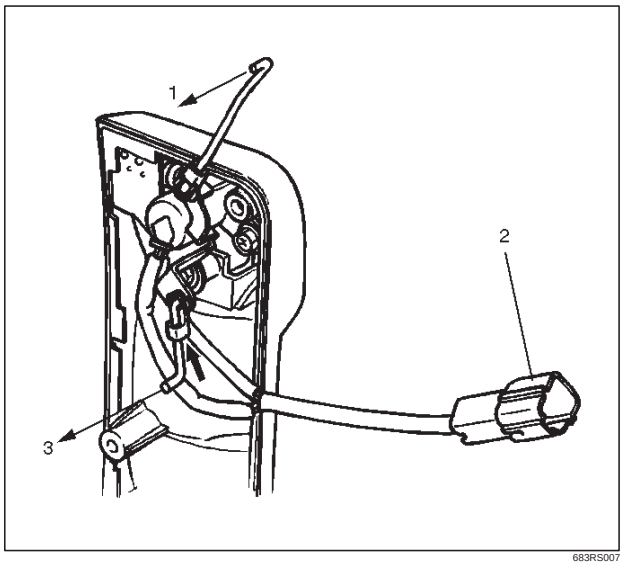

683RS007

Legend

(1) To Actuator
(2) Key Switch Connector
(3) To Lock Assembly

6. Remove the key switch fixing bolt(3) to remove the key switch(4) from the tailgate lock cylinder (w/anti-theft)(1).
   And remove the tailgate lock cylinder fixing bolt(2) to remove the tailgate lock cylinder.

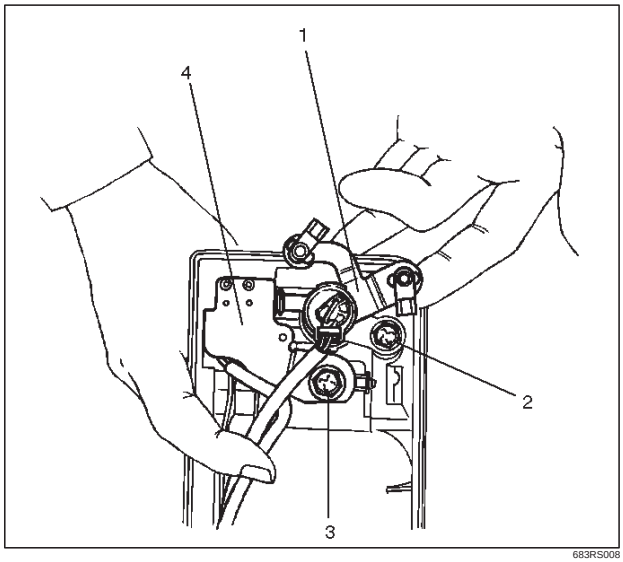

683RS008

Installation

To install, follow the removal steps in the reverse order, noting the following points.

1. For the anti-theft system, install the push rod(1) of the key switch(3) to the key cylinder(2) while pressing it so that there is not continuity between the key switch side connector terminals No. G5–2 and G5–4 as shown in the figure.

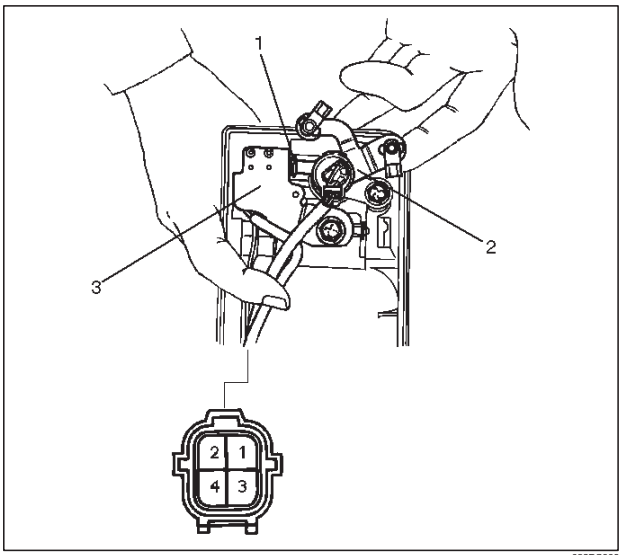

683RS009

2. Tighten the outside handle and key cylinder fixing bolts to the specified torque.

   Torque: 9 N·m (78 lb in)

3. Check that the outside handle and key cylinder operate correctly after installing them.

Downloaded from www.Manualslib.com manuals search engine

Key

Key Coding

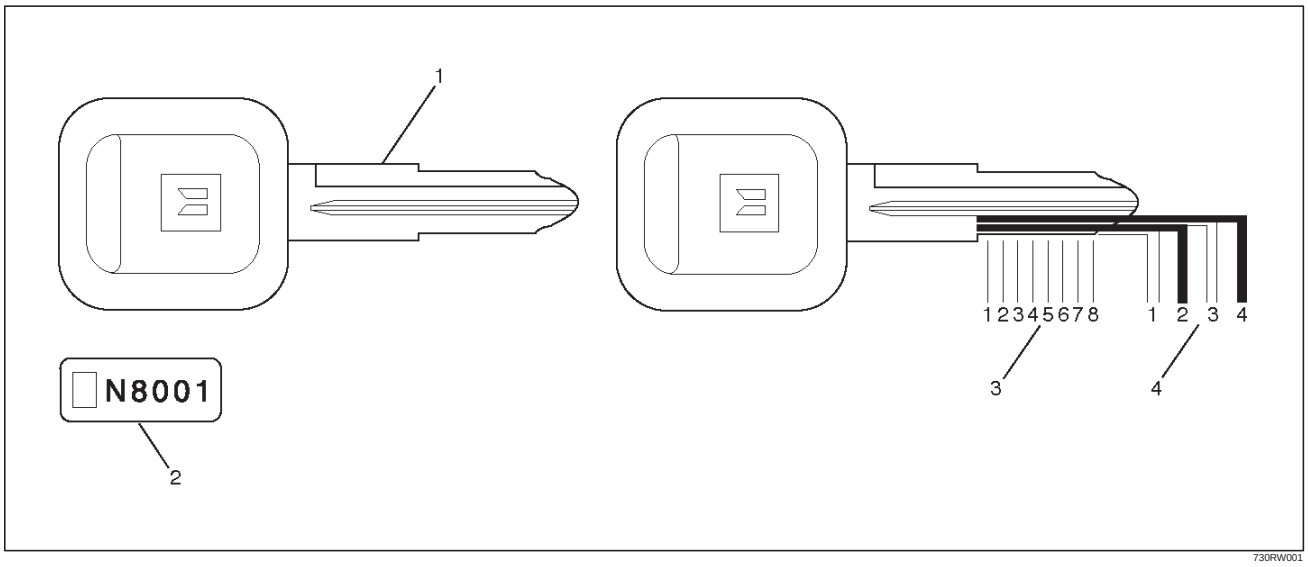

730RW001

Legend
(1) Key(Actual Size)
(2) Key Code Tag
(3) Position
(4) Level

One key is used for the ignition, door, and tailgate lock cylinders. The keys are cut on both edges to make them reversible.
Key identification is obtained from the five character key code stamped on the key code tag. From this key code, the key code cutting combination can be determined from a code list (available to owners of key cutting equipment from suppliers).
If key codes are not available from records or tags, the key code can be obtained from the right hand door lock cylinder (if lock has not been replaced). Lock cylinders supplied by the factory as service parts are unmarked.
If the original key is available, the key code cutting combination can be determined by laying the key on the diagram shown in the figure.

Key Styles

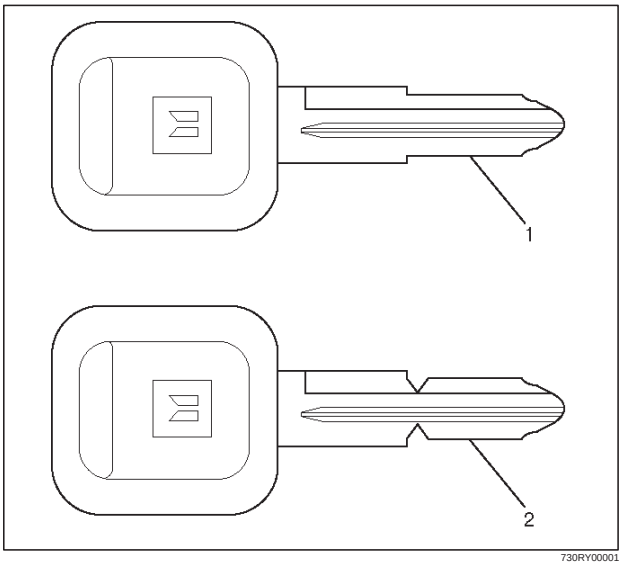

730RY00001

Legend
(1) Blank Key Style “A”
(2) Blank Key Style “B”

The keys come in styles A or B depending on the key code cutting combination. When the first position in the combination is a 1, 2 or 3, Style A is used. When the first position is a 4, Style B (factory pre-cut key) is used.

Downloaded from www.Manualslib.com manuals search engine

Power Door Lock System

General Description

The circuit consists of the door lock (& power window) switch, door lock actuator for the front and rear door, tailgate lock actuator and the door lock key switch. The front door lock switch –LH is always provided with battery voltage.

The key or the inside lock button on the both driver's and the front passenger's door can activate the lock mechanism of all the doors (including the tailgate).

When the driver's door lock switch or the front passenger's door lock switch is turned on, current flows for about one second to the door lock actuator of each door connected in parallel with the front door lock (& power window) switch –LH to activate the actuator to lock and unlock the doors.

Front Door Lock Actuator Removal

1. Refer to the Front Door Lock Assembly removal procedure in this section.
2. Remove the door lock actuator(1).

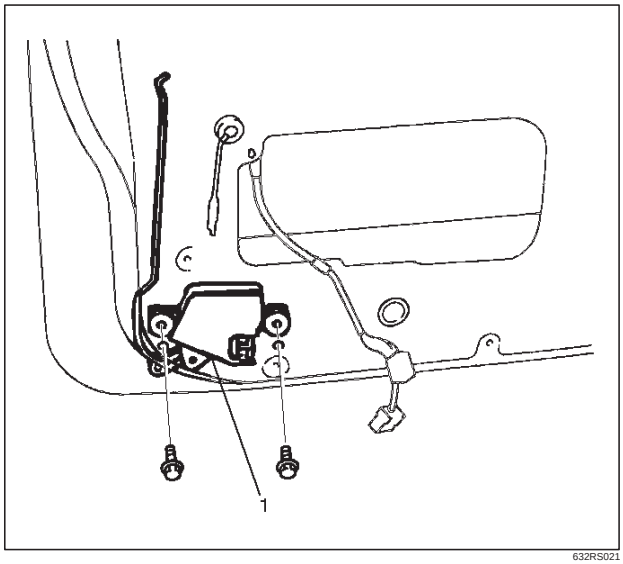

632RS021

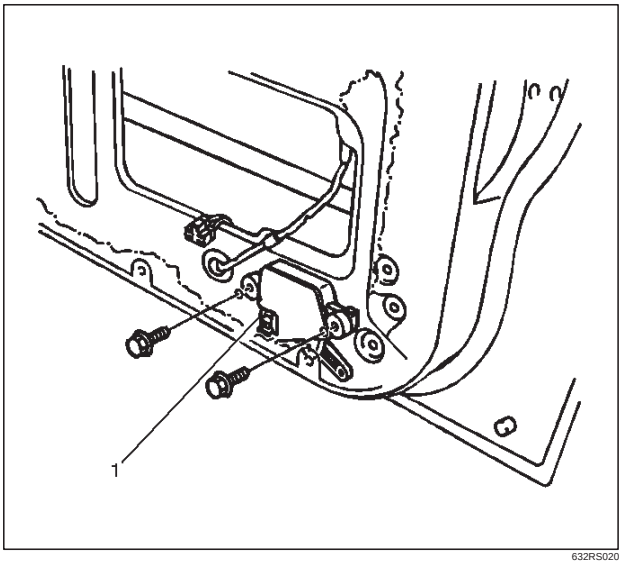

632RS020

Front Door Lock Actuator Installation

To install, follow the removal steps in the reverse order.

Rear Door Lock Actuator Removal

1. Refer to the Rear Door Lock Assembly removal procedure in this section.
2. Removal the door lock actuator(1).

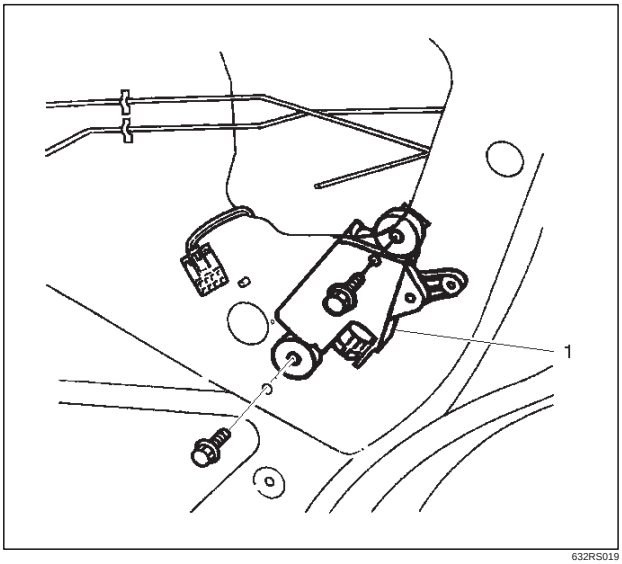

632RS019

Downloaded from www.Manualslib.com manuals search engine

Rear Door Lock Actuator Installation

To install, follow the removal steps in the reverse order.

Tailgate Lock Actuator Removal

1. Refer to the Tailgate Lock Assembly removal procedure in this section.
2. Remove the tailgate lock actuator(1).

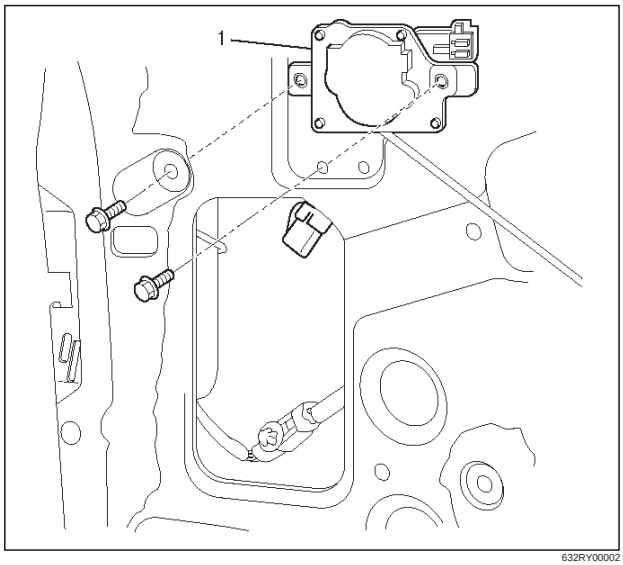

632RY00002

Tailgate Lock Actuator Installation

To install, follow the removal steps in the reverse order.

Downloaded from www.Manualslib.com manuals search engine

Anti-theft System

General Description

The circuit consists of the starter switch, anti-theft & keyless entry control unit, anti-theft horn, front door and tailgate key switch (detect and tamper switch), door lock (& power window) switch, door lock actuator for each door, engine hood switch, clutch start switch (M/T), ANTI-THEFT indicator light and mode switch (A/T).
The system operates as follows: After locking the starter switch and removing the starter key (this sets the alarm), if the door is unlocked in any way other than with the proper key, the headlights start flashing, the horn sounds, and the starter circuit is disabled. (However, the engine hood and all the doors must be locked and closed.)
Once the system has been placed in the warning or alarm condition, it can be released only when the starter switch is shifted from “OFF” to “ACC” by the starter key, or when the lock of the front door or the tailgate is released (to activate the detect switch) by the starter key.

Anti-theft & Keyless Entry Control Unit Removal

1. Disconnect the battery ground cable.
2. Remove the front console assembly.
   - Refer to the Instrument Panel Assembly in Body Structure section.
3. Remove the lower cluster assembly.
   - Refer to the Instrument Panel Assembly in Body Structure section.
4. Disconnect the connector(2).
5. Remove four screws to remove the anti-theft & keyless entry control unit with bracket(1).

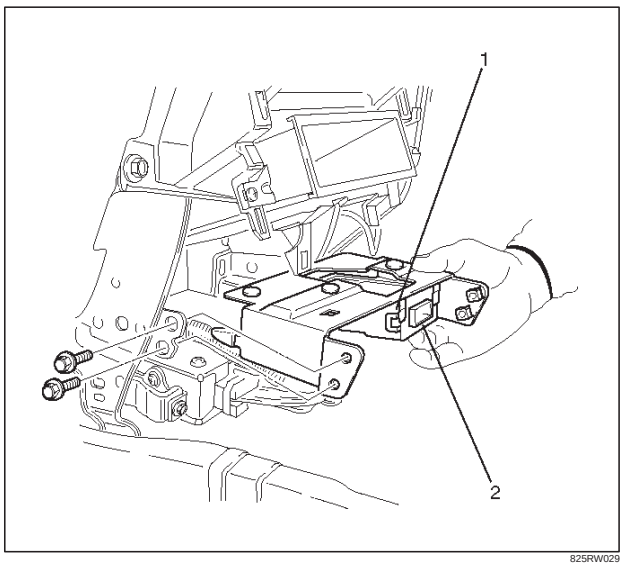

825RW029

6. Remove two nuts from the anti-theft & keyless entry control unit with bracket(3) to remove the anti-theft & keyless entry controller(4).

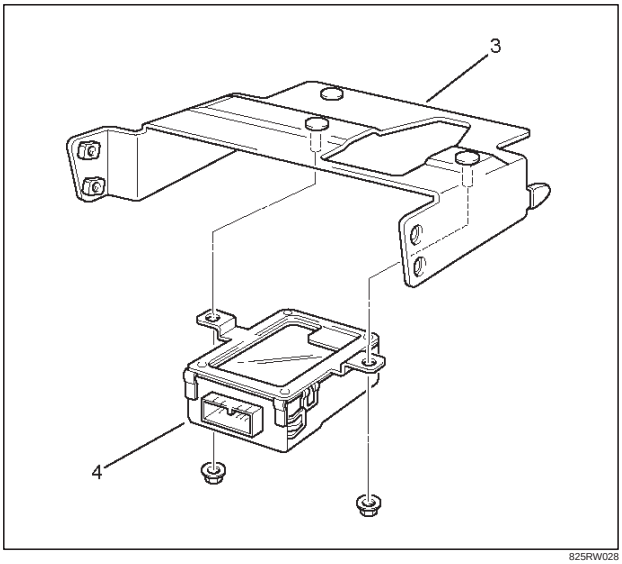

825RW028

Anti-theft & Keyless Entry Control Unit Installation

To install, follow the removal steps in the reverse order.

Anti-theft Indicator Removal

1. Disconnect the battery ground cable.
2. Remove the front console assembly(1).
   - Refer to the Instrument Panel Assembly in Body Structure section.
3. Remove the lower cluster assembly(2).
   - Refer to the Instrument Panel Assembly in Body Structure section.
4. Remove the instrument panel driver lower cover assembly(3).
   - Refer to the Instrument Panel Assembly in Body Structure section.

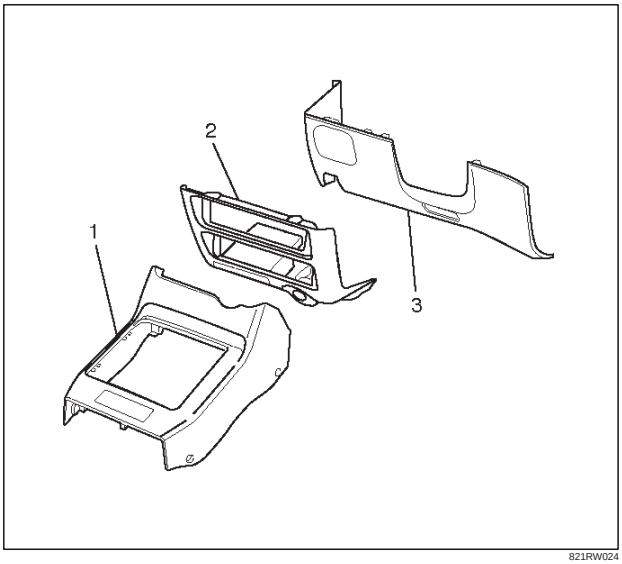

821RW024

Downloaded from www.Manualslib.com manuals search engine

5. Remove the instrument panel cluster assembly(4).
   - Refer to the Instrument Panel Assembly in Body Structure section.
6. Remove two screws and then remove the anti-theft indicator(5).

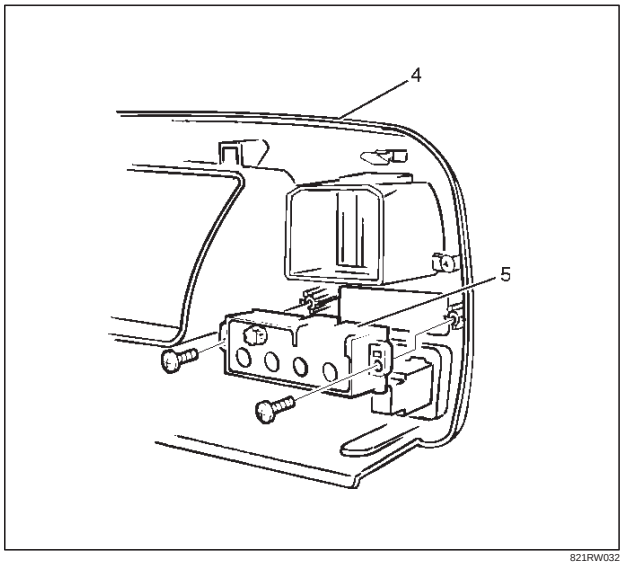

821RW032

Anti-theft Indicator Installation

To install, follow the removal steps in the reverse order.

Anti-theft Horn Removal

1. Disconnect the battery ground cable.
2. Disconnect the connector and remove the fixing bolt to remove the anti-theft horn(1).

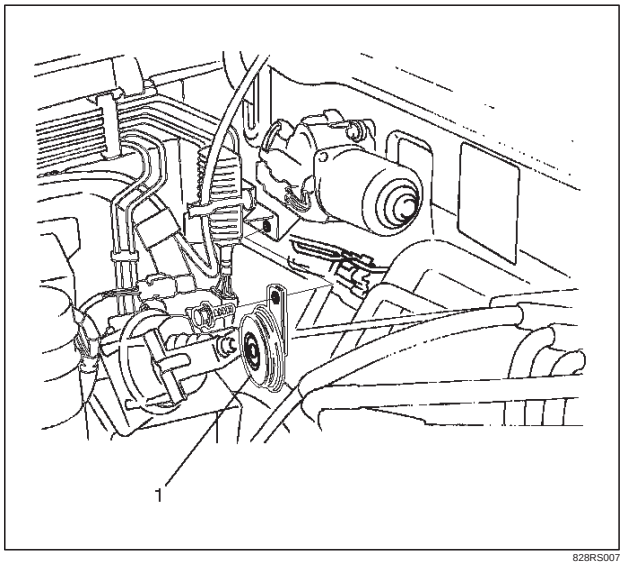

828RS007

Anti-Theft Horn Installation

To install, follow the removal steps in the reverse order.

Engine Hood Switch Removal

1. Disconnect the battery ground cable.
2. Remove the cap(1).
3. Remove the lock nut(2).
4. Disconnect the connector(4).
5. Remove the engine hood switch(3).

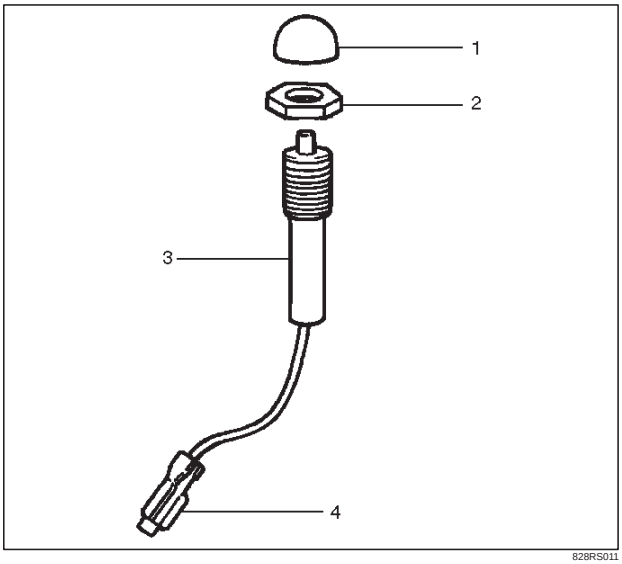

828RS011

Engine Hood Switch Installation

To install, follow the removal steps in the reverse order.

Downloaded from www.Manualslib.com manuals search engine

Keyless Entry System

ID Code Registration

There are four kinds of ID codes which can be registered, for which these two modes, ID code new registration and ID code additional registration, are available.

ID Code New Registration

This procedure erases all registered ID codes and registers a new received ID code instead.

Step	Action	Yes	No
1	1. Confirm that all the doors are closed and unlocked. 2. Open the driver's side door. 3. Insert the key into the starter switch. Is the action complete?	Go to Step 2	Go to Step 1
2	Turn the starter switch to ACC position and then to OFF position three times. NOTE: This step must be carried out within five seconds after step 1. Is the action complete?	Go to Step 3	Go to Step 1
3	Close the driver's side door and then open it two times. NOTE: This step must be carried out within ten seconds after step 2. Is the action complete?	Go to Step 4	Go to Step 1
4	1. Turn the starter switch to ACC position and then to OFF position five times. 2. Close the driver's side door and then open it. NOTE: This step must be carried out within ten seconds after step 3. Is the action complete?	Go to Step 5	Go to Step 1
5	The control unit locks and unlocks the doors one time. Does the control unit work normally?	Go to Step 6	Go to Step 1
6	Operate the lock or unlock button of the transmitter. NOTE: This step must be carried out within twenty seconds after step 5. Is the action complete?	Go to Step 7	Go to Step 1
7	The control unit locks and unlocks the doors one time. Does the control unit work normally?	Go to Step 8	Go to Step 1

Downloaded from www.Manualslib.com manuals search engine

Step	Action	Yes	No
8	Operate the lock or unlock button of the transmitter. NOTE: This step must be carried out within twenty seconds after step 7. Is the action complete?	Go to Step 9	Go to Step 1
9	The control unit compares the two codes sent from the transmitter. If the code succeeds in registration, the control unit locks and unlocks the doors one time. If the two codes are different from each other or fails in registration, the control unit locks and unlocks the doors three times. NOTE: In any case, this procedure is finished.	Go to Step 1	Go to Step 1

ID Code Additional Registration

This procedure additionally registers a new received ID code with holding registered ID codes. When total number of registered ID codes and newly registered ID code exceeds four, they are erased in order of older one.

Step	Action	Yes	No
1	1. Confirm that all the doors are closed and unlocked. 2. Open the driver's side door. 3. Insert the key into the starter switch. Is the action complete?	Go to Step 2	Go to Step 1
2	Turn the starter switch to ACC position and then to OFF position three times. NOTE: This step must be carried out within five seconds after step 1. Is the action complete?	Go to Step 3	Go to Step 1
3	Close the driver's side door and then open it two times. NOTE: This step must be carried out within ten seconds after step 2. Is the action complete?	Go to Step 4	Go to Step 1
4	1. Turn the starter switch to ACC position and then to OFF position three times. 2. Close the driver's side door and then open it. NOTE: This step must be carried out within ten seconds after step 3. Is the action complete?	Go to Step 5	Go to Step 1
5	The control unit locks and unlocks the doors two times. Does the control unit work normally?	Go to Step 6	Go to Step 1
6	Operate the lock or unlock button of the transmitter. NOTE: This step must be carried out within twenty seconds after step 5. Is the action complete?	Go to Step 7	Go to Step 1
7	The control unit locks and unlocks the doors one time. Does the control unit work normally?	Go to Step 8	Go to Step 1

Downloaded from www.Manualslib.com manuals search engine

Step	Action	Yes	No
8	Operate the lock or unlock button of the transmitter. NOTE: This step must be carried out within twenty seconds after step 7. Is the action complete?	Go to Step 9	Go to Step 1
9	The control unit compares the two codes sent from the transmitter. If the code succeeds in registration, the control unit locks and unlocks the doors one time. If the two codes are different from each other or fails in registration, the control unit locks and unlocks the doors three times. NOTE: In any case, this procedure is finished.	Go to Step 1	Go to Step 1

Anti–theft & Keyless Entry Control Unit/Transmitter Replacement

Anti–theft & Keyless Entry Control Unit Replacement

1. Remove and install the control unit.
   - Refer to Anti–theft & Keyless Entry Control Unit Removal and Installation in this section.
2. Register ID code.
   - Refer to ID Code Registration in this section.
3. Check that the keyless entry system works normally.

Transmitter Replacement

1. Prepare a new transmitter.
2. Regiter ID code.
   - Refer to ID Code Registration in this section.
3. Check that the keyless entry system works normally.

Transmitter Battery Replacement

1. Remove a screw to remove the cover.
2. Remove the batteries.
3. Set the new batteries into the transmitter.
4. Install the cover to the transmitter.
5. Check that the keyless entry system works normally.

Downloaded from www.Manualslib.com manuals search engine

Main Data and Specifications

Torque Specifications

Application	N·m	Lb Ft	Lb In
Front Door Lock Assembly Fixing Screws	7	—	61
Front Outside Handle and Key Switch Fixing Bolts	9	—	78
Rear Door Lock Assembly Fixing Screws	7	—	61
Rear Outside Handle Fixing Bolts	9	—	78
Tailgate Lock Assembly (LH) Fixing Screws	7	—	61
Tailgate Lock Assembly (RH) Fixing Bolts	11	—	95
Tailgate Outside Handle and Key Cylinder Fixing Bolts	9	—	78

Downloaded from www.Manualslib.com manuals search engine

TROOPER

BODY AND ACCESSORIES

SUN ROOF/CONVERTIBLE TOP

CONTENTS

Service Precaution 8I–1
Sun Roof Glass 8I–2
Sun Roof Glass and Associated Parts 8I–2
Removal 8I–2
Installation 8I–3
Sun Roof Deflector 8I–4
Removal 8I–4
Installation 8I–4
Sunshade 8I–4
Disassembled View 8I–4
Removal 8I–5
Installation 8I–5
Sun Roof Frame Complete Assembly 8I–6
Sun Roof Frame Complete Assembly and Associated Parts 8I–6
Removal 8I–6
Installation 8I–7
Disassembled View 8I–7
Disassembly 8I–7
Reassembly 8I–8
Sun Roof Drain Hose (Front Side) 8I–9
Sun Roof Drain Hose (Front Side) and Associated Parts 8I–9
Removal 8I–9
Installation 8I–9
Sun Roof Drain Hose (Rear Side) 8I–10
Sun Roof Drain Hose (Rear Side) and Associated Parts 8I–10
Removal 8I–10
Installation 8I–10
Sun Roof Switch 8I–11
General Description 8I–11
Removal 8I–11
Installation 8I–11
Sun Roof Motor 8I–12
Removal 8I–12
Installation 8I–12
Main Data and Specifications 8I–13

Service Precaution

WARNING: THIS VEHICLE HAS A SUPPLEMENTAL RESTRAINT SYSTEM (SRS). REFER TO THE SRS COMPONENT AND WIRING LOCATION VIEW IN ORDER TO DETERMINE WHETHER YOU ARE PERFORMING SERVICE ON OR NEAR THE SRS COMPONENTS OR THE SRS WIRING. WHEN YOU ARE PERFORMING SERVICE ON OR NEAR THE SRS COMPONENTS OR THE SRS WIRING, REFER TO THE SRS SERVICE INFORMATION. FAILURE TO FOLLOW WARNINGS COULD RESULT IN POSSIBLE AIR BAG DEPLOYMENT, PERSONAL INJURY, OR OTHERWISE UNNEEDED SRS SYSTEM REPAIRS.

CAUTION: Always use the correct fastener in the proper location. When you replace a fastener, use ONLY the exact part number for that application. ISUZU will call out those fasteners that require a replacement after removal. ISUZU will also call out the fasteners that require thread lockers or thread sealant. UNLESS OTHERWISE SPECIFIED, do not use supplemental coatings (Paints, greases, or other corrosion inhibitors) on threaded fasteners or fastener joint interfaces. Generally, such coatings adversely affect the fastener torque and the joint clamping force, and may damage the fastener. When you install fasteners, use the correct tightening sequence and specifications. Following these instructions can help you avoid damage to parts and systems.

Downloaded from www.Manualslib.com manuals search engine

Sun Roof Glass

Sun Roof Glass and Associated Parts

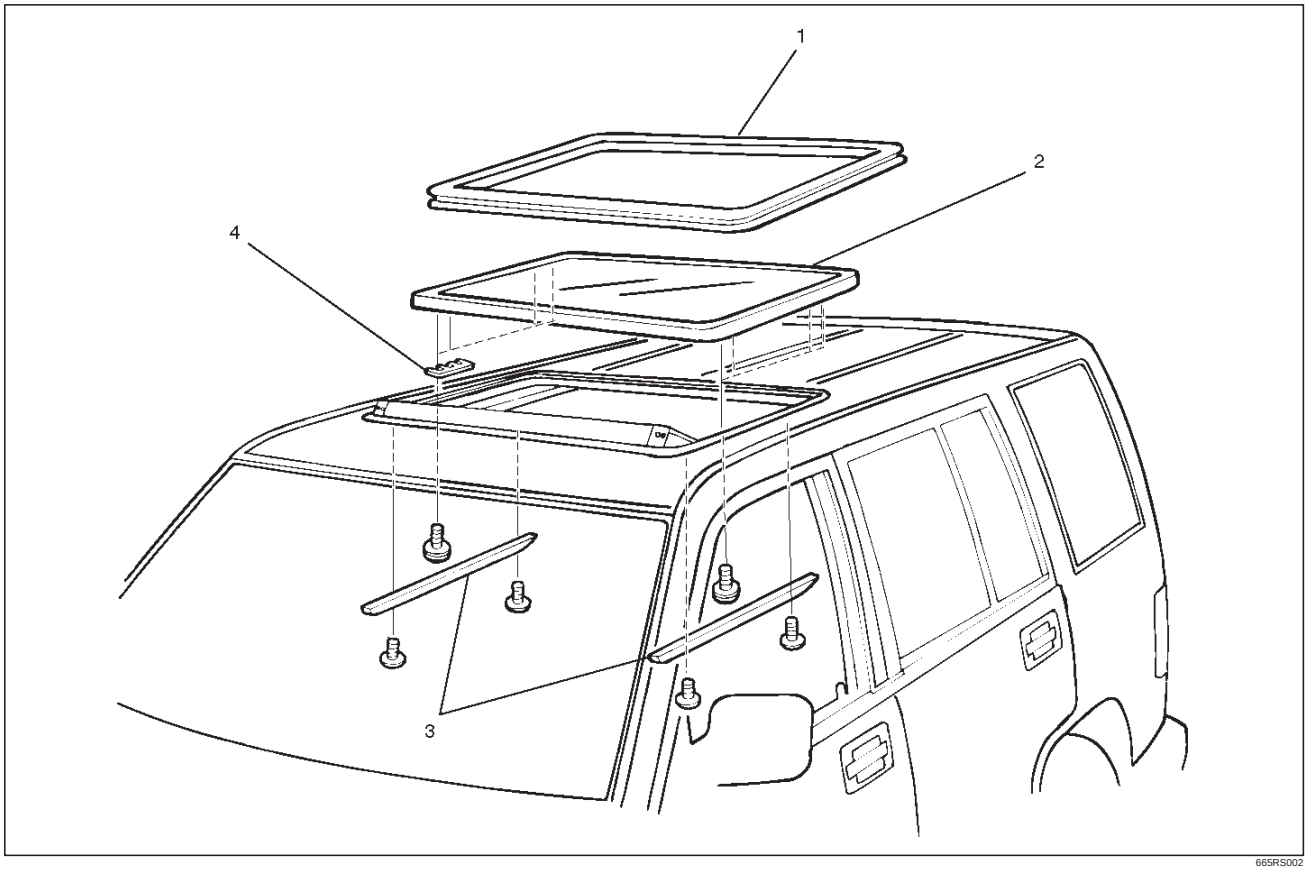

665RS002

Legend

(1) Sun Roof Weatherstrip
(2) Sun Roof Glass
(3) Decoration Cover
(4) Sun Roof Shim

Removal

1. Open the sun roof and pull the sun roof weatherstrip out from the roof panel.
2. Disconnect the battery ground cable.
3. Close the sun roof and open the sunshade(1). Then, remove the decoration cover fixing screws and decoration cover(2).

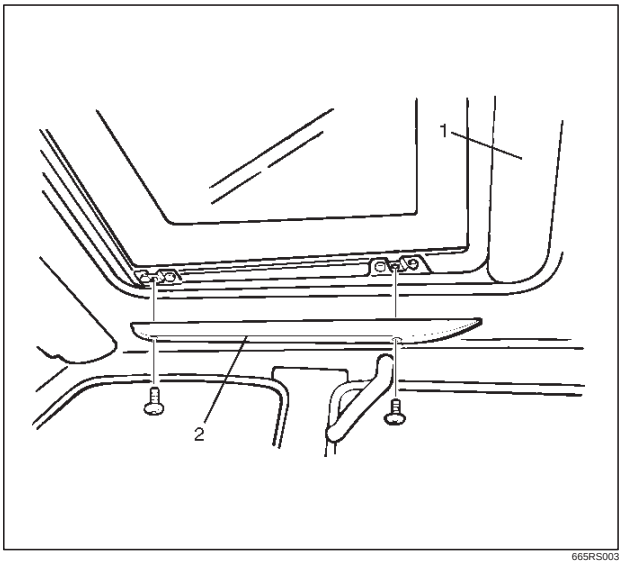

665RS003

Downloaded from www.Manualslib.com manuals search engine

4. Remove eight sun roof glass fixing screws to remove the sun roof glass(3).

NOTE: If shims are used between the sun roof set plate and the glass, note the number of shims used.

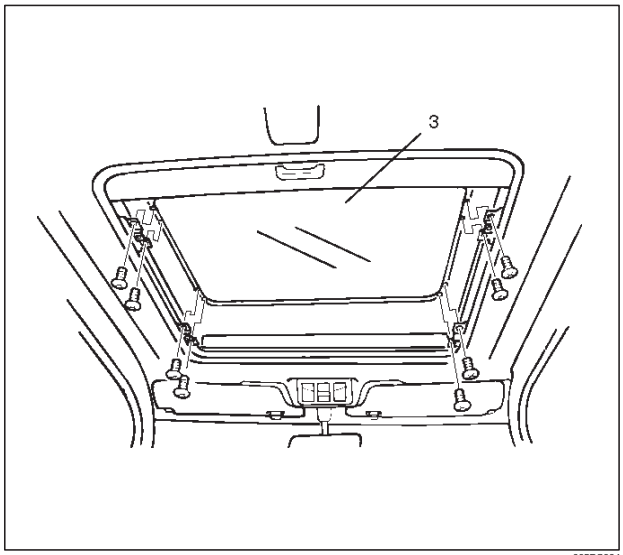

665RS004

Installation

To install, follow the removal steps in the reverse order, noting the following points.

1. Clean the body panel of the weatherstrip fixing portion.
   - If the protective film(1) of the body panel is peeled, it cannot be reused.
     Install the new protective film around the body panel(2).
2. Install the new weatherstrip(3).
   - Always replace with a new one.
   - Be sure to install the sun roof weatherstrip so that the white marking location(4) of the weatherstrip is on the front side of the vehicle.

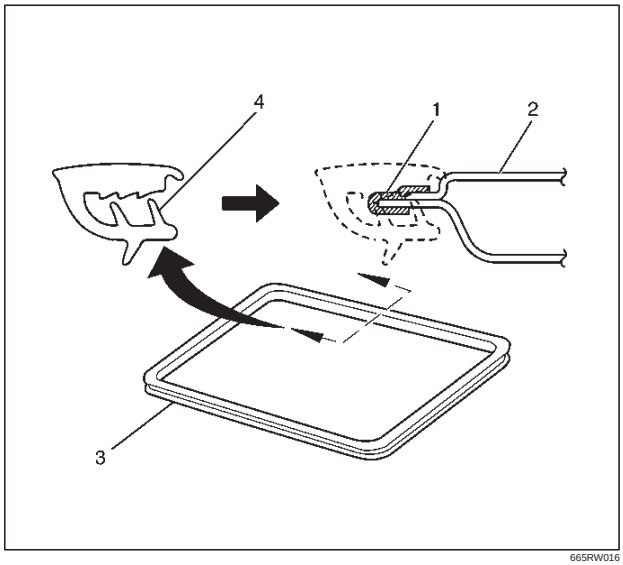

665RW016

3. Temporarily install the glass to the sun roof frame.
4. Open and shut the sun roof four to five times to position correctly the sun roof weatherstrip and the glass in the longitudinal and latitudinal setting positions.
5. Insert the original shims between the sun roof set plate and the glass.
6. Tighten the sun roof glass fixing screws to the specified torque.

   Torque: 10 N·m (87 lb in)
7. After the sun roof glass is installed, check the roof panel and sun roof glass for vertical install position.
   If out of standard, adjust with shim.
   For the installation standard, refer to Body Dimension in Body Structure section.
8. Install the decoration cover.

Downloaded from www.Manualslib.com manuals search engine

Sun Roof Deflector

Removal

1. Open the sun roof.
2. Remove the fixing screws(2) to remove the sun roof deflector(1).

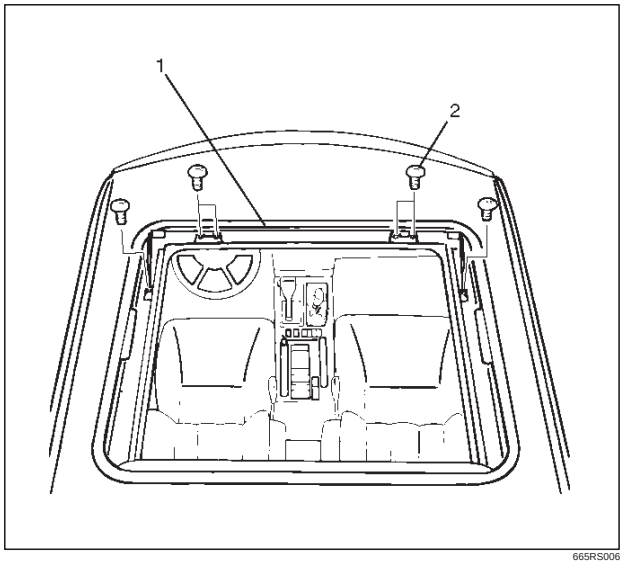

665RS006

Installation

To install, follow the removal steps in the reverse order.

Sunshade

Disassembled View

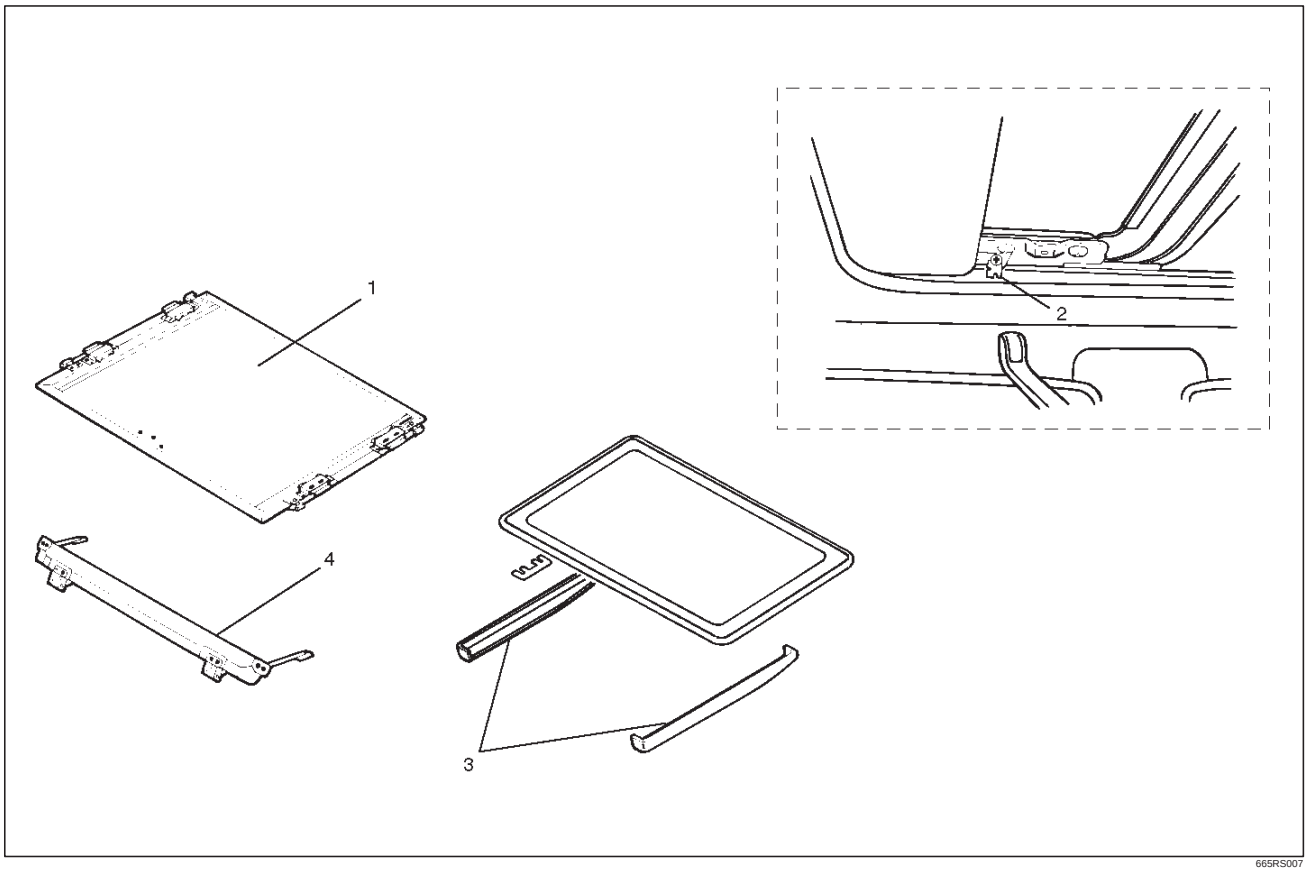

665RS007

Downloaded from www.Manualslib.com manuals search engine

Legend
(1) Sunshade
(2) Sunshade Stopper
(3) Decoration Cover
(4) Sun Roof Deflector

Removal

1. Remove the decoration cover.
2. Open the sun roof half position, remove the sunshade stopper screw and pull out the sunshade(6) until its front side protrudes a little from the sun roof glass(2) to remove the sunshade stopper.
3. Remove the sun roof deflector.
   - Refer to the Sun Roof Deflector in this section.
4. Open the sun roof completely.
5. Remove the sunshade guide rail stopper(5), and pull out the sunshade up to the rail edge.
6. Remove the guide pin(4) in the sunshade through the notch(7) of guide rail(1) and then draw the sunshade out of the roof by pushing inward the retaining clips(3) on both sides.

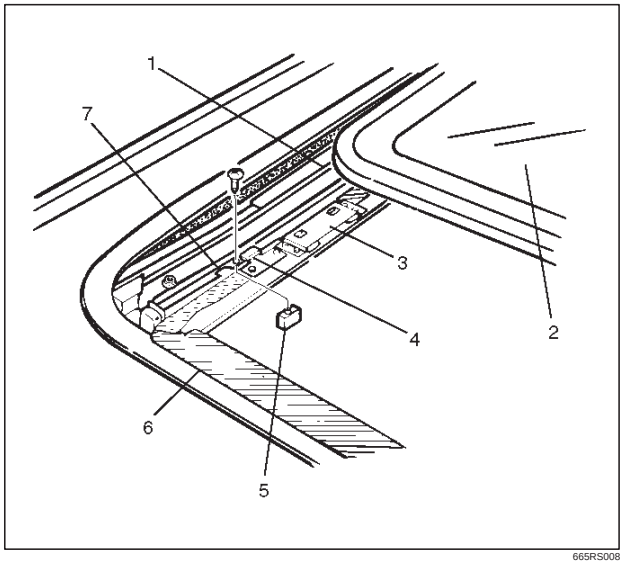

665RS008

Installation

To install, follow the removal steps in the reverse order.

Downloaded from www.Manualslib.com manuals search engine

Sun Roof Frame Complete Assembly

Sun Roof Frame Complete Assembly and Associated Parts

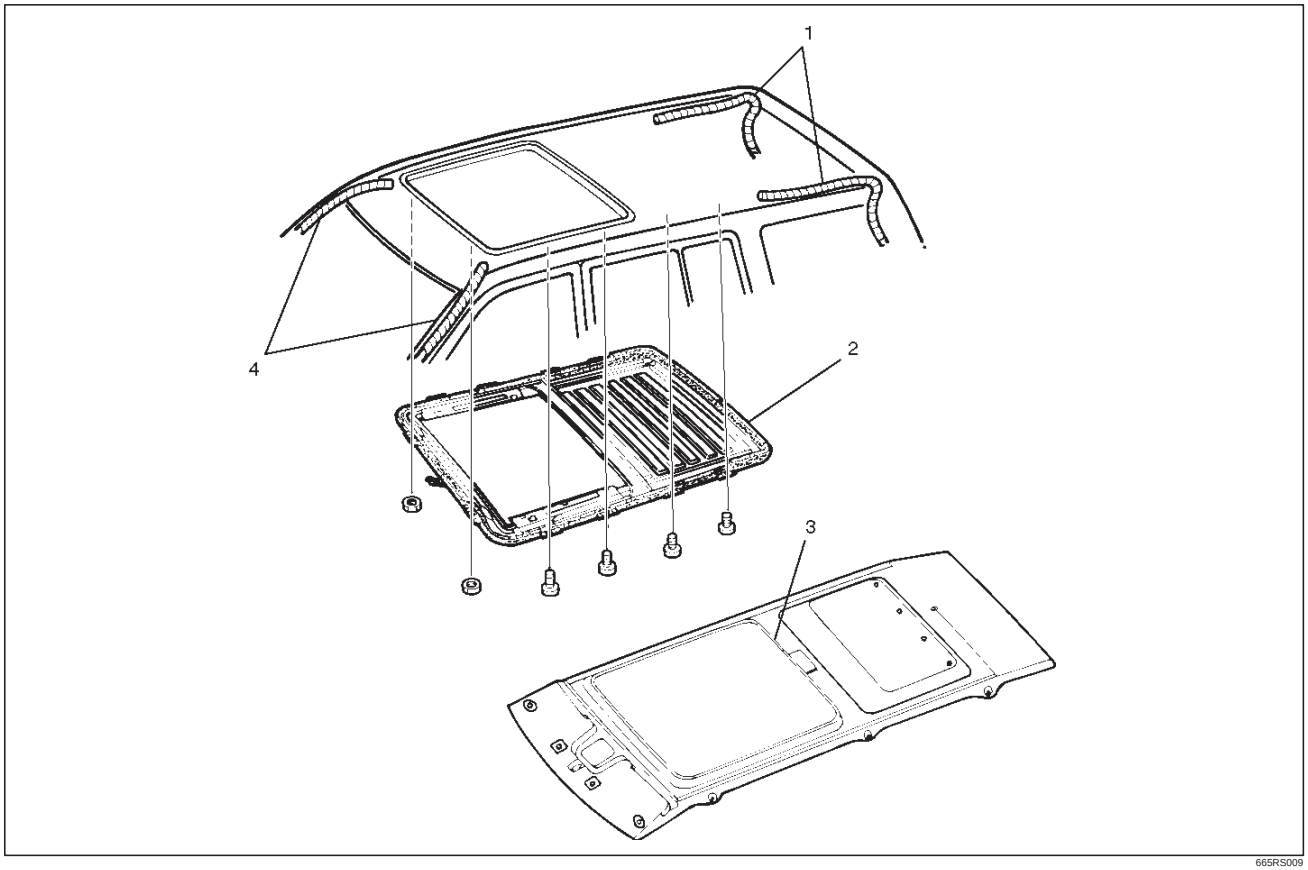

665RS009

Legend

(1) Sun Roof Drain Hose
(2) Sun Roof Frame Complete Assembly
(3) Headlining
(4) Sun Roof Drain Hose

Removal

1. Disconnect the battery ground cable.
2. Remove the headlining.
   - Refer to the Headlining in Body Structure section.
3. Disconnect the sun roof drain hose at the sun roof frame side as shown in the figure.

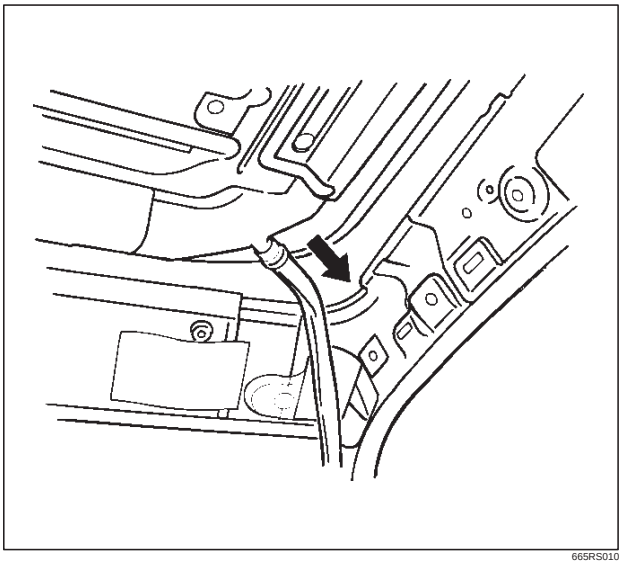

665RS010

4. Disconnect the sun roof harness connection.

Downloaded from www.Manualslib.com manuals search engine

5. Remove two sun roof frame complete assembly fixing nuts (front side) and four fixing bolts (each side) from the frame complete, and then remove the sun roof frame complete assembly.

NOTE: Be sure to remove the frame complete while supporting it.

Installation

To install, follow the removal steps in the reverse order, noting the following points.

1. Tighten the sun roof frame complete assembly fixing bolts and nuts to the specified torque.

Torque: 10 N·m(87 lb in)

2. After installing the frame complete, loosen the sun roof glass fixing nuts and adjust the sun roof glass setting position.
   - Refer to the Sun Roof Glass in this section.

Disassembled View

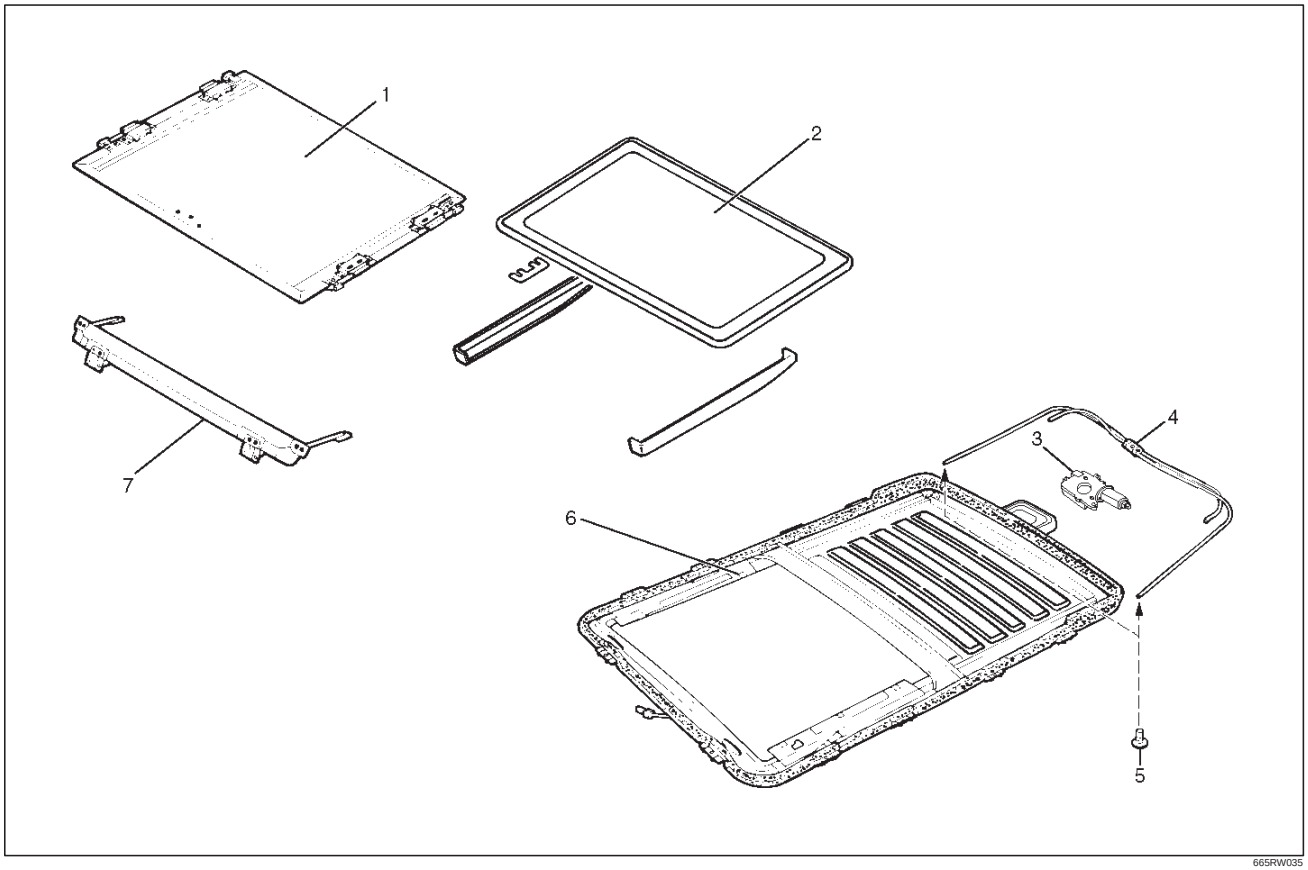

Legend

(1) Sunshade
(2) Sun Roof Glass
(3) Sun Roof Motor
(4) Sun Roof Drive Unit Assembly
(5) Outer Tube Fixing Screw
(6) Sun Roof Frame Assembly
(7) Sun Roof Deflector

Disassembly

1. Open the sun roof.
2. Remove the sun roof deflector fixing screws and then remove the sun roof deflector.
3. Remove the sunshade.
   - Refer to the Sunshade in this section.
4. Close the sun roof, remove the decoration cover and the fixing screws and then remove the sun roof glass.
5. If the shims are used between the sun roof set plate and the glass, note the number of the shims.

Downloaded from www.Manualslib.com manuals search engine

6. Disconnect the sun roof motor connector, remove the sun roof fixing nuts and screws, and then remove the sun roof motor.
7. Remove the cable outer tube(2) fixing screws.
8. Remove the cable outer tube fixing clamps(1) and guide rail fixing nuts(5).
9. Prying the guide rail a little with a screwdriver, draw the outer tube out of the grommet(3).
   - At this time, the inner cable(4) remains on the frame assembly.
10. Remove the sun roof frame assembly.

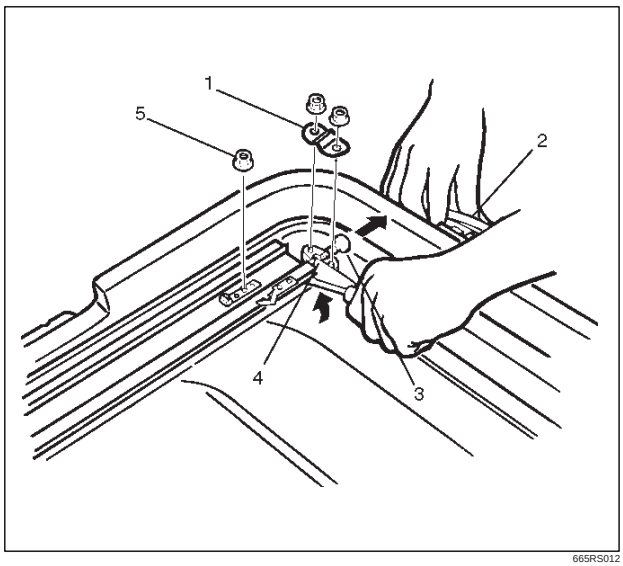

665RS012

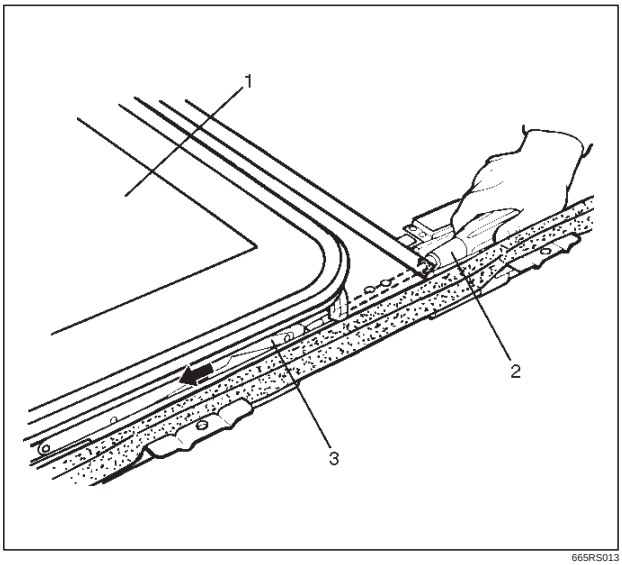

665RS013

Reassembly

To reassembly, follow the disassembly steps in the reverse order, noting the following points.

1. When installing the motor or drive unit, set the sun roof set plate in the full closed position by pushing the link(3) portion using the screwdriver(2).
2. When installing the sun roof glass(1) to the sun roof set plate, insert the original shims in the same position before removing the sun roof glass.

Downloaded from www.Manualslib.com manuals search engine

Sun Roof Drain Hose (Front Side)

Sun Roof Drain Hose (Front Side) and Associated Parts

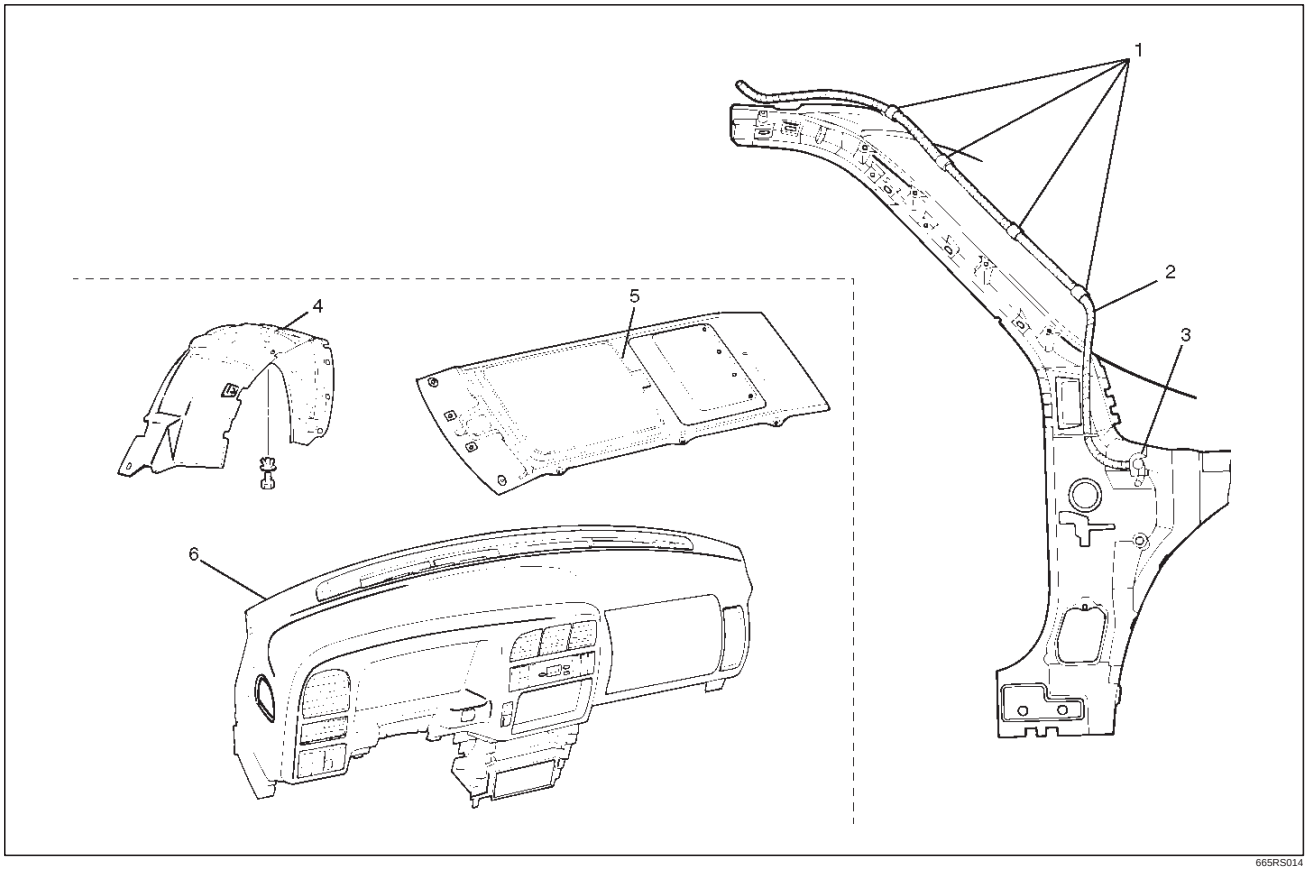

665RS014

Legend

(1) Clip
(2) Sun Roof Drain Hose
(3) Grommet
(4) Front Inner Liner
(5) Headlining
(6) Instrument Panel Assembly

Removal

1. Remove the front inner liner.
2. Remove the headlining.
   - Refer to the Headlining in Body Structure section.
3. Remove the instrument panel assembly.
   - Refer to the Instrument Panel Assembly in Body Structure section.
4. Disconnect the drain hose at the frame complete side.
5. Apply the soap and water to the body panel grommet.
6. Pass the string from the sun roof frame side through the drain port side, and remove the drain hose from the hose fixing clips. Taking care not to allow the body panel grommet to be removed together with the hose, pull the drain hose only to the inside of the vehicle. (The string should be kept as it is.)

Installation

To install, follow the removal steps in the reverse order, noting the following points.

1. Apply the soap and water to the body panel grommet.
2. Install the drain hose from inside of the vehicle by utilizing, as a guide, the string passed during removal step.
3. The body panel grommet must not be twisted or caught in during installation.
4. Complete routing, avoiding extreme bends or curves.
5. After routing, install the trim with care not to allow the drain hose to be caught in.
6. Test the drain condition.
7. The protrusion of drain hose from the body panel must be within 50 mm (2.0 in). If it exceeds 50 mm (2.0 in) after correct routing, cut the leading edge so that the protrusion is within 50 mm (2.0 in).

Downloaded from www.Manualslib.com manuals search engine

Sun Roof Drain Hose (Rear Side)

Sun Roof Drain Hose (Rear Side) and Associated Parts

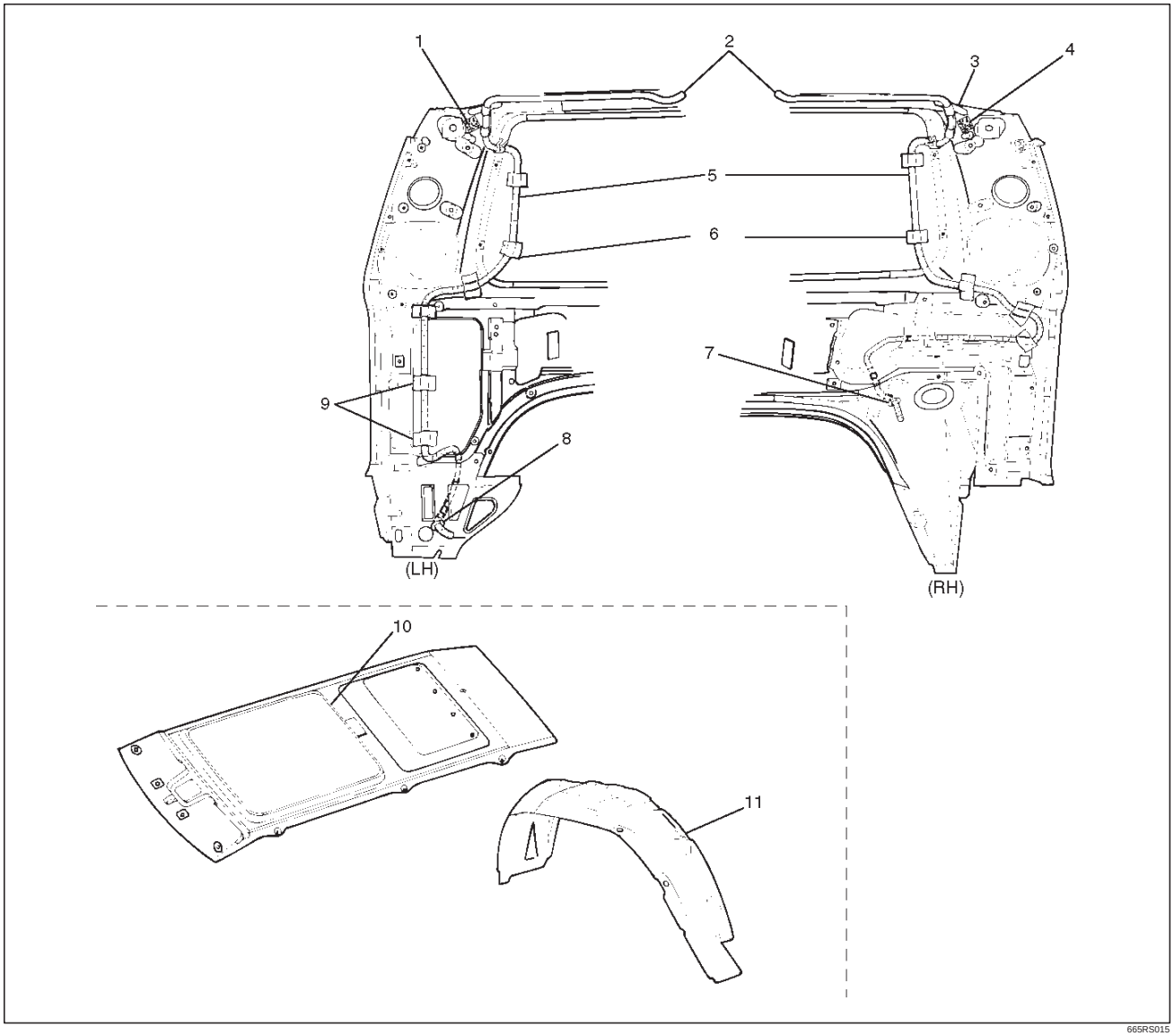

Legend

(1) Soft Tape
(2) Pipe
(3) Clip
(4) Soft Tape
(5) Sun Roof Drain Hose
(6) Tape
(7) Grommet
(8) Grommet
(9) Clip
(10) Headlining
(11) Rear Fender Inner Liner

Removal

1. Disconnect the battery ground cable.
2. Remove the rear fender inner liner.
3. Remove the headlining.
   - Refer to the Headlining in Body Structure section.
4. Disconnect the drive hose at the frame complete side.
5. Remove the hose fixing tapes and clips.
6. Apply the soap and water to the body panel grommet.
7. Pull the drain hose to the inside of the vehicle.

Installation

To install, follow the removal steps in the reverse order, noting the following points.

Downloaded from www.Manualslib.com manuals search engine

1. Apply the soap and water to the body panel grommet.
2. Insert the drain hose from inside of vehicle, restore routing, and fix with new soft tape and clip.
   If the grommet is removed during removal of drain hose, insert the grommet into drain hose from outside of the vehicle, and install on the body panel, avoiding any twisting.
3. After installing the drain hose, install the trim while taking care not to crush the drain hose.
   Also, care should be taken not to allow the drain hose connected to the pipe to be caught in.
4. Test the drain condition.
5. The protrusion of the drain hose from the body panel must be within 50 mm (2.0 in). If it exceeds 50 mm (2.0 in) after correct routing, cut the leading edge so that the protrusion is within 50 mm (2.0 in).

Sun Roof Switch

General Description

Sun roof operation can be controlled by pushing continuously the sun roof switch to activate the sun roof control unit and sun roof motor.
While the switch is being pushed to the “OPEN” side, the sun roof stops about 165 mm (6.5 in) before fully open position. Push the switch again to the “OPEN” side to open it fully. When the switch is being continuously pushed to the “CLOSE” side, the sun roof stops about 180 mm (7.1 in) short of the fully closed position and remains in this state. Push the switch again to the “CLOSE” side to close it completely.

Removal

1. Disconnect the battery ground cable.
2. Pull down the switch housing(2) and disconnect the sun roof switch and map light connectors to remove the sun roof switch(1).

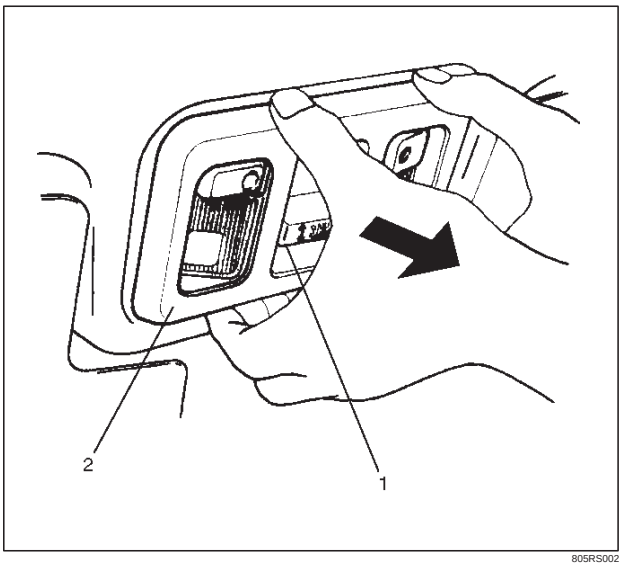

805RS002

Installation

To install, follow the removal steps in the reverse order.

Downloaded from www.Manualslib.com manuals search engine

Sun Roof Motor

Removal

1. Disconnect the battery ground cable.
2. Remove the headlining(2).
   - Refer to the Headlining in Body Structure section.
3. Disconnect the connector, and remove three nuts and two screws to remove the sun roof motor(1).

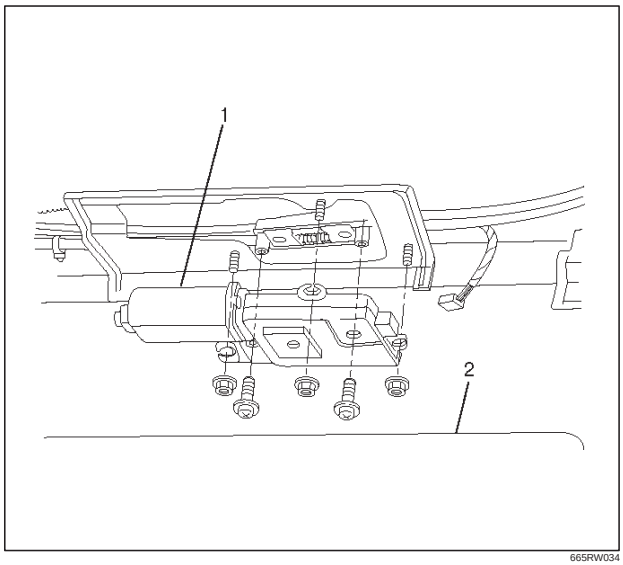

665RW034

Installation

To install, follow the removal steps in the reverse order.

Downloaded from www.Manualslib.com manuals search engine

Main Data and Specifications

Torque Specifications

Application	N·m	Lb Ft	Lb In
Sun Roof Frame Complete Assembly Fixing Bolts	10	—	87
Sun Roof Glass Fixing Screws	10	—	87

Downloaded from www.Manualslib.com manuals search engine

TROOPER

BODY AND ACCESSORIES

EXTERIOR / INTERIOR TRIM

CONTENTS

Service Precaution 8J–2
Dash Side Trim Panel 8J–3
Removal 8J–3
Installation 8J–3
Assist Grip 8J–3
Parts Location 8J–3
Removal and Installation 8J–3
Consoles 8J–4
Consoles and Associated Parts 8J–4
Removal 8J–4
Installation 8J–5
Front Door Trim Panel 8J–6
Front Door Trim Panel and Associated Parts 8J–6
Removal 8J–6
Installation 8J–9
Rear Door Trim Panel 8J–10
Rear Door Trim Panel and Associated Parts 8J–10
Removal 8J–10
Installation 8J–11
Door Wood Panel Assembly 8J–13
Door Wood Panel Assembly and Associated Parts 8J–13
Removal 8J–13
Installation 8J–13
Door Mirror 8J–14
Door Mirror and Associated Parts 8J–14
Removal 8J–14
Installation 8J–14
Luggage Side and Quarter Upper Trim Cover 8J–15
Luggage Side, Quarter Upper Trim Cover and Associated Parts 8J–15
Removal 8J–15
Installation 8J–17
Center Pillar and Roof Side Trim Cover 8J–17
Center Pillar, Roof Side Trim Cover and Associated Parts 8J–17
Removal 8J–18
Installation 8J–19
Front Pillar Trim Cover 8J–19
Front Pillar Trim Cover and Associated Parts 8J–19
Removal 8J–19
Installation 8J–20
Center Pillar Assist Grip 8J–20
Parts Location 8J–20
Removal and Installation 8J–20
Assist Grip 8J–21
Parts Location 8J–21
Removal and Installation 8J–21
Fuel Filler Lid Opener Cable 8J–22
Fuel Filler Lid Opener Cable and Associated Parts 8J–22
Removal 8J–22
Installation 8J–23
Fuel Filler Door 8J–23
Parts Location 8J–23
Removal 8J–23
Installation 8J–23
Rocker Protector (Without Wheel Opening Extension) 8J–24
Rocker Protector (Without Wheel Opening Extension) and Associated Parts 8J–24
Removal 8J–24
Installation 8J–24
Wheel Opening Extension and Rocker Protector Assembly 8J–25
Wheel Opening Extension, Rocker Protector Assembly and Associated Parts 8J–25
Removal 8J–25
Installation 8J–26
Mud Flaps (With Wheel Opening Extension) 8J–27
Mud Flaps (With Wheel Opening Extension) and Associated Parts 8J–27
Removal 8J–27
Installation 8J–27
Ventilation Assembly 8J–28
Ventilation Assembly and Associated Parts 8J–28
Removal 8J–28
Installation 8J–28
Tailgate Trim Panel (LH) 8J–29
Tailgate Trim Panel (LH) and Associated Parts 8J–29
Removal 8J–29
Installation 8J–29
Tailgate Trim Panel (RH) 8J–30
Parts Location 8J–30
Removal 8J–30

Downloaded from www.Manualslib.com manuals search engine

Installation 8J–30
Luggage Floor Box 8J–31
Luggage Floor Box and Associated Parts . 8J–31
Remove 8J–31
Installation 8J–31
Rope Hook Set 8J–31
Rope Hook Set and Associated Parts 8J–31
Removal 8J–31
Installation 8J–31
Power Door Mirror System 8J–32
General Description 8J–32
Door Mirror Switch Assembly (Control Switch, Folding Switch and Defogger Switch) Removal 8J–32
Installation 8J–32
Power Door Mirror 8J–32
General Description 8J–32
Removal and Installation 8J–32
Power Window System 8J–33
General Description 8J–33
Power Window Switch Removal and Installation 8J–33
Power Window Motor Removal and Installation 8J–34
Main Data and Specifications 8J–35

Service Precaution

WARNING: THIS VEHICLE HAS A SUPPLEMENTAL RESTRAINT SYSTEM (SRS). REFER TO THE SRS COMPONENT AND WIRING LOCATION VIEW IN ORDER TO DETERMINE WHETHER YOU ARE PERFORMING SERVICE ON OR NEAR THE SRS COMPONENTS OR THE SRS WIRING. WHEN YOU ARE PERFORMING SERVICE ON OR NEAR THE SRS COMPONENTS OR THE SRS WIRING, REFER TO THE SRS SERVICE INFORMATION. FAILURE TO FOLLOW WARNINGS COULD RESULT IN POSSIBLE AIR BAG DEPLOYMENT, PERSONAL INJURY, OR OTHERWISE UNNEEDED SRS SYSTEM REPAIRS.

CAUTION: Always use the correct fastener in the proper location. When you replace a fastener, use ONLY the exact part number for that application. ISUZU will call out those fasteners that require a replacement after removal. ISUZU will also call out the fasteners that require thread lockers or thread sealant. UNLESS OTHERWISE SPECIFIED, do not use supplemental coatings (Paints, greases, or other corrosion inhibitors) on threaded fasteners or fastener joint interfaces. Generally, such coatings adversely affect the fastener torque and the joint clamping force, and may damage the fastener. When you install fasteners, use the correct tightening sequence and specifications. Following these instructions can help you avoid damage to parts and systems.

Downloaded from www.Manualslib.com manuals search engine

Dash Side Trim Panel

Removal

1. Disconnect the battery ground cable.
2. Remove the front door sill plate(2).
3. Remove the dash side trim panel(3).
   - Turn up the door inner seal(1) of the body panel to remove the clips of the trim panel.
   - Take care not to damage the harness and the controller on the back of the trim panel.

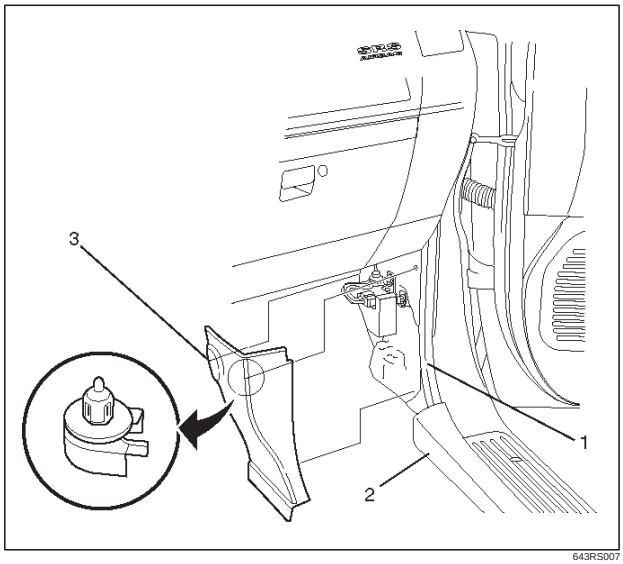

643RS007

Installation

To install, follow the removal steps in the reverse order, noting the following point.

1. Lap the door inner seal over the trim panel to install them securely to the body panel.

Assist Grip

Parts Location

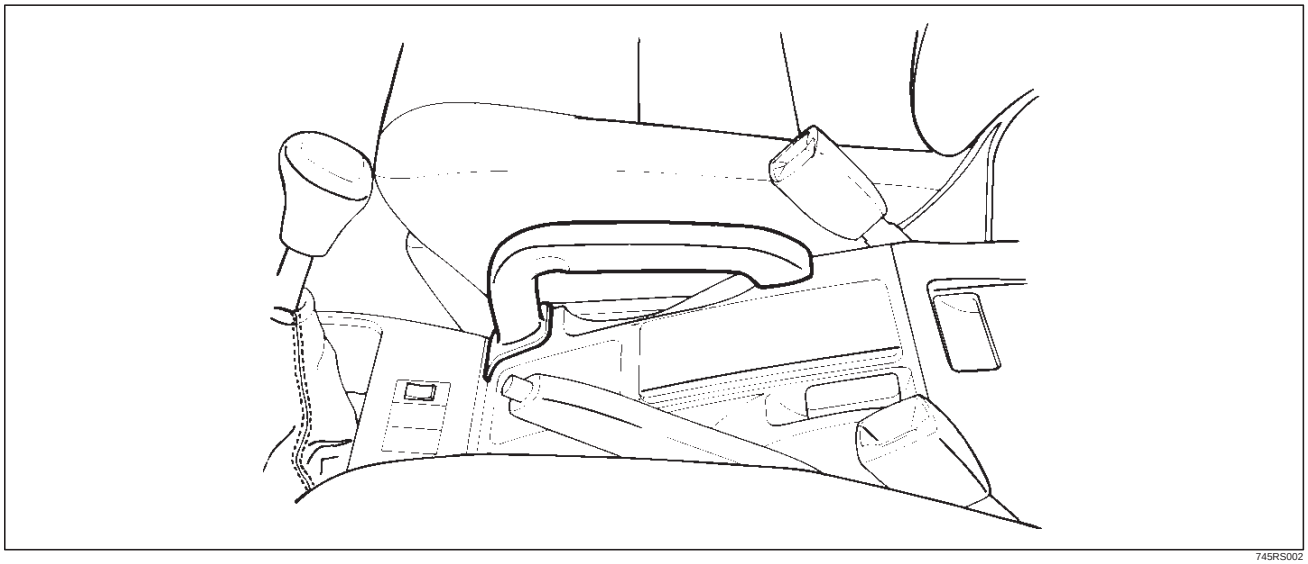

745RS002

Removal and Installation

- Refer to the Consoles removal and installation steps in this section.

Downloaded from www.Manualslib.com manuals search engine

Consoles

Consoles and Associated Parts

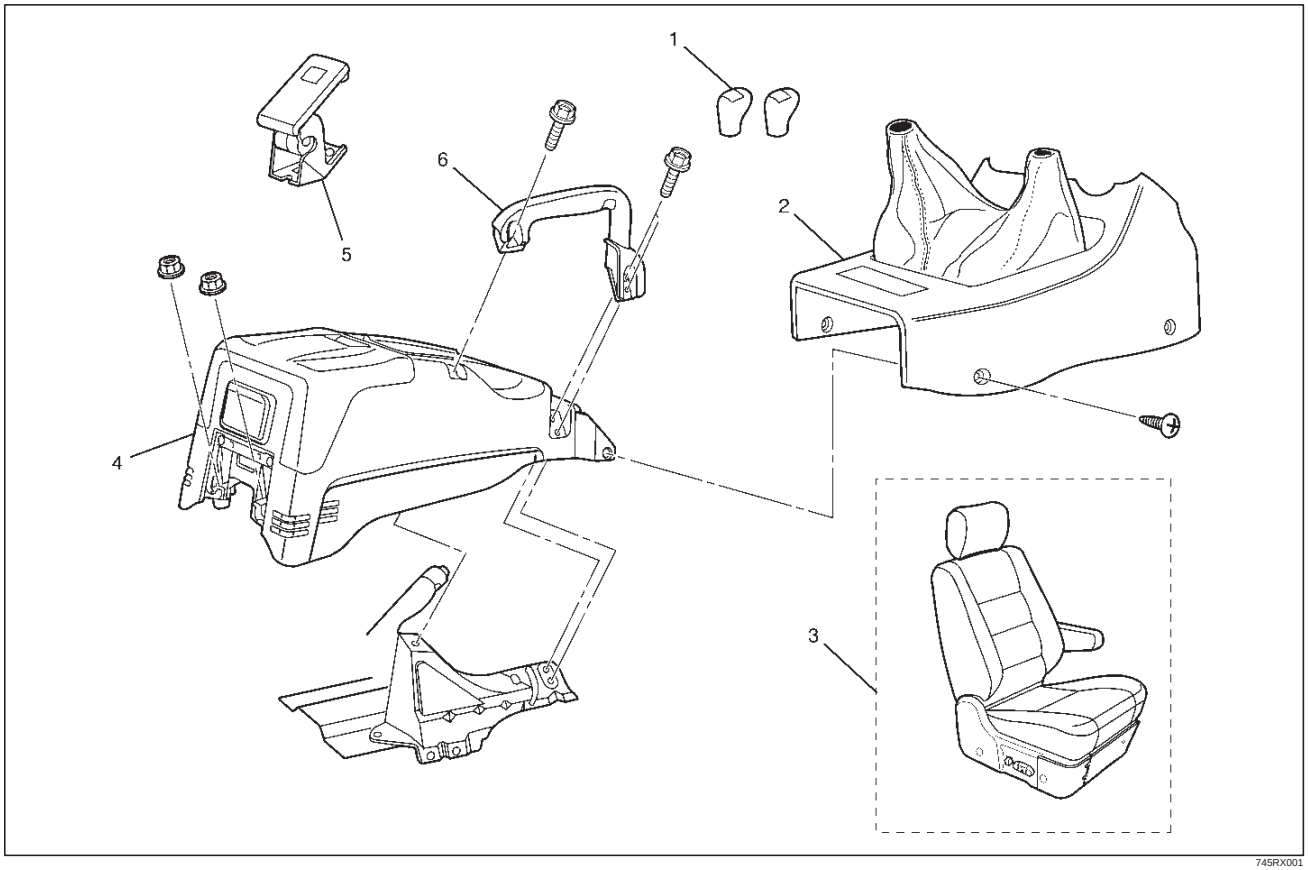

745RX001

Legend

(1) Shift Knob (M/T) / Transfer Knob (A/T)
(2) Front Console Assembly
(3) Front Seat Assembly (RH)
(4) Center Console Assembly
(5) Fuel Filler Lid Opener
(6) Assist Grip

Removal

1. Disconnect the battery ground cable.
2. Remove the shift knob (M/T) / transfer knob (4x4 only).
3. Remove the front console assembly.
   - Remove four fixing screws and disconnect the switch connectors.
4. Remove the front seat assembly(RH).
   - Refer to Front Seat Assembly in Seats section.
5. Remove the assist grip.
   - Remove three bolts.
6. Remove the fuel filler lid opener.
   - Remove the fuel filter lid opener(1) and disconnect the cable(2).

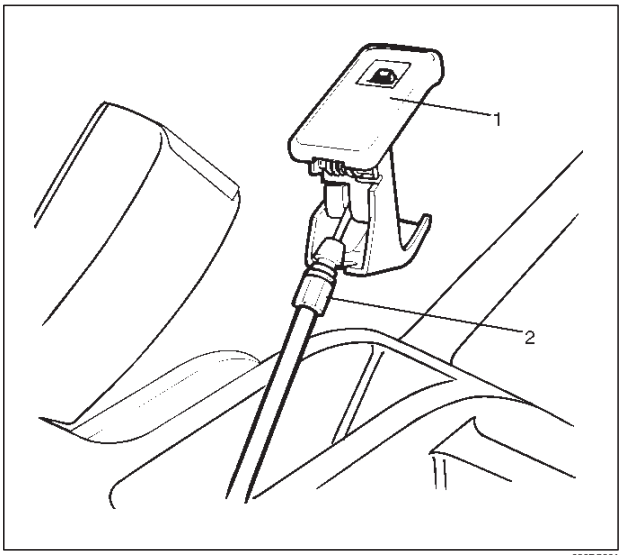

686RS001

Downloaded from www.Manualslib.com manuals search engine

7. Remove the center console assembly(2).
   - Remove two fixing screws on the front side.
     Open the rear cover, remove two nuts, then the center console assembly.
   - Remove the rear heater duct(1) from the center console.

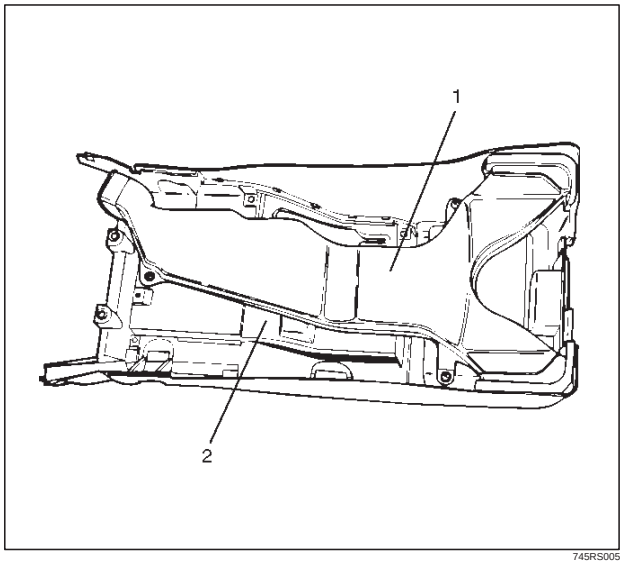

745RS005

Installation

To install, follow the removal steps in the reverse order.

Downloaded from www.Manualslib.com manuals search engine

Front Door Trim Panel

Front Door Trim Panel and Associated Parts

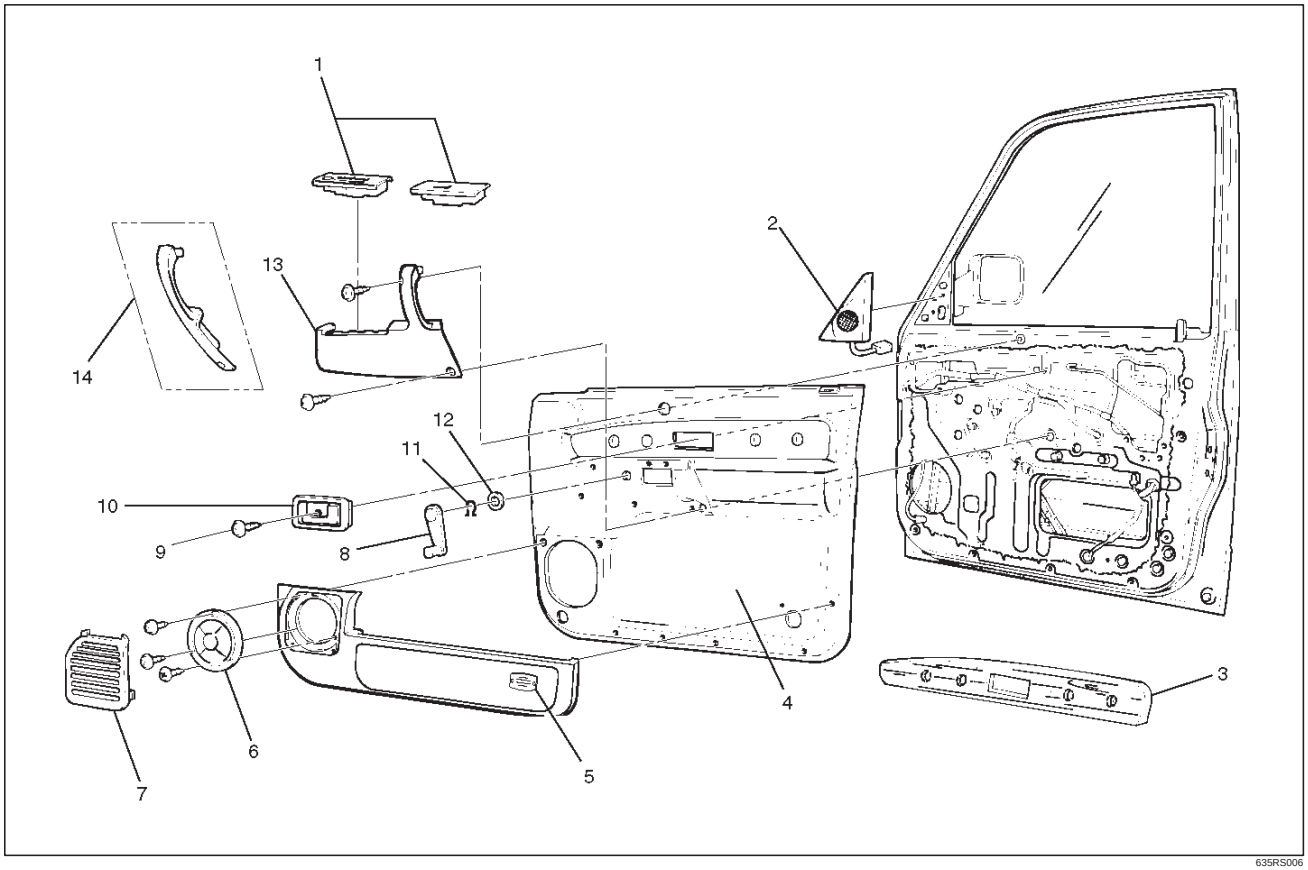

635RS006

Legend

(1) Power Window Switch
(2) Door Mirror Cover/Tweeter
(3) Door Wood Panel
(4) Door Trim Panel
(5) Courtesy Light
(6) Front Speaker
(7) Speaker Cover
(8) Regulator Handle
(9) Inside Handle Fixing Screw
(10) Inside Handle
(11) Hook
(12) Washer
(13) Inside Pull Handle
(14) Inside Pull Handle (W/O Power Window)

Removal

1. Disconnect the battery ground cable.

Downloaded from www.Manualslib.com manuals search engine

2. Remove the door mirror cover/tweeter(1).
   - On a model equipped with a tweeter, remove the connector(2).

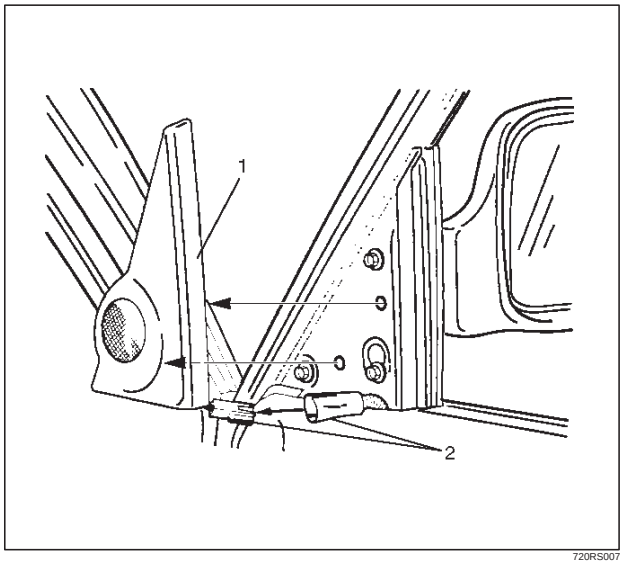

720RS007

3. Remove the regulator handle(3).
   - Pull the hook(4) out and remove the regulator handle.

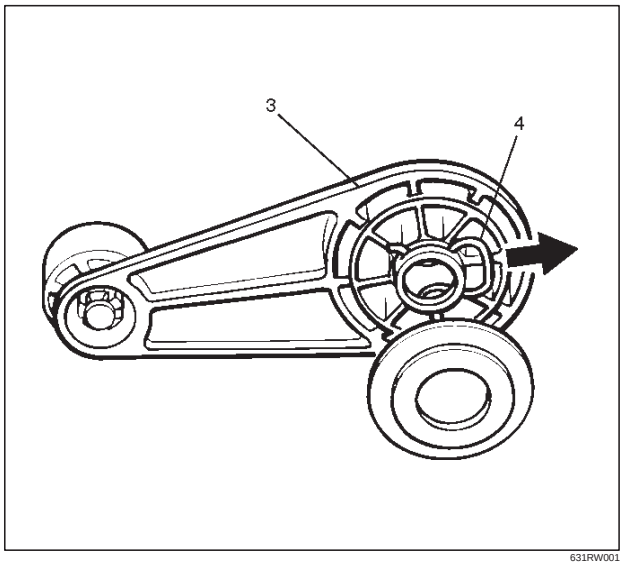

631RW001

4. Remove the power window switch(5).
   - Pry the power window switch out and disconnect the switch connector.

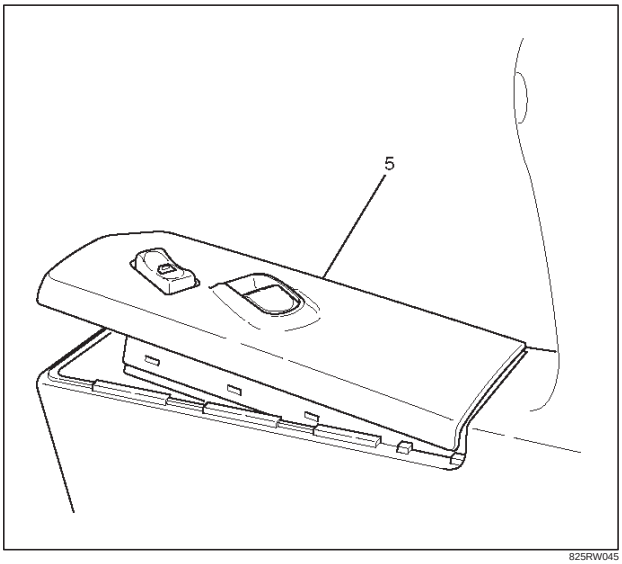

825RW045

5. Remove the speaker cover.
6. Remove the front speaker.
   - Remove the front speaker fixing screws in order to disconnect the speaker connector.
7. Remove the inside handle fixing screw.
   - Remove the screw that fixes the inside handle(7), slide the inside handle to the position illustrated, and leave it there for the moment.

CAUTION: Take care not to impose excessive force on the inside handle link(6), lest this link is elongated, which could make it impossible to operate the door with the inside handle.

Downloaded from www.Manualslib.com manuals search engine

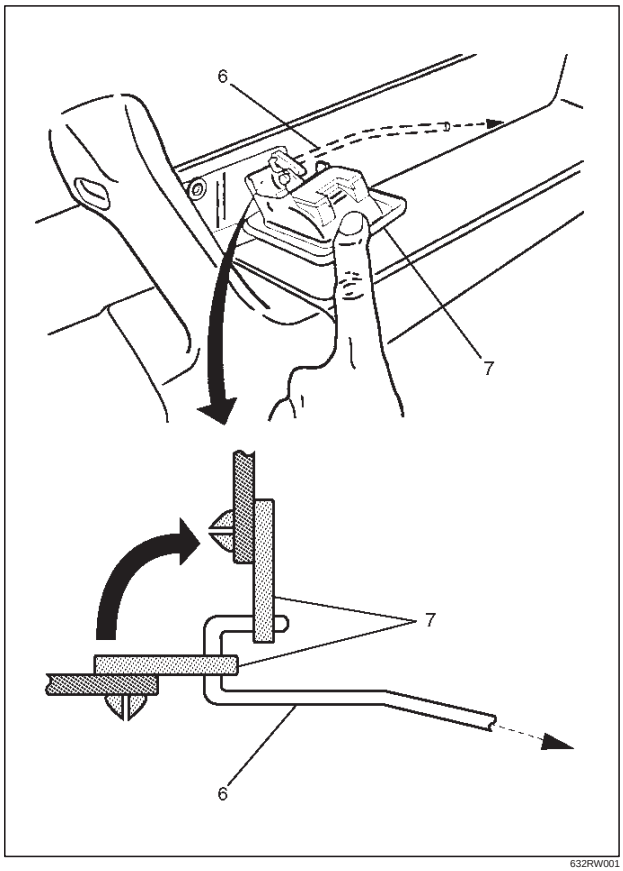

632RW001

8. Remove the door trim panel(9).
   - Remove two fixing screws(8) in order to take off seven clips(10) from the door panel.

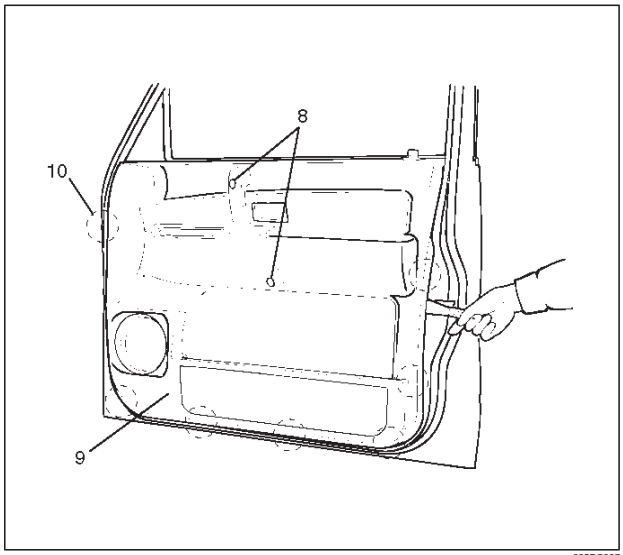

635RS007

- Disconnect the courtesy light connector(13) to lift the door trim panel(14) and unlock the engagement of the waist seal(12) section. Then, pass the inside handle(11) through the mounting hole of the trim panel, and detach the trim panel.

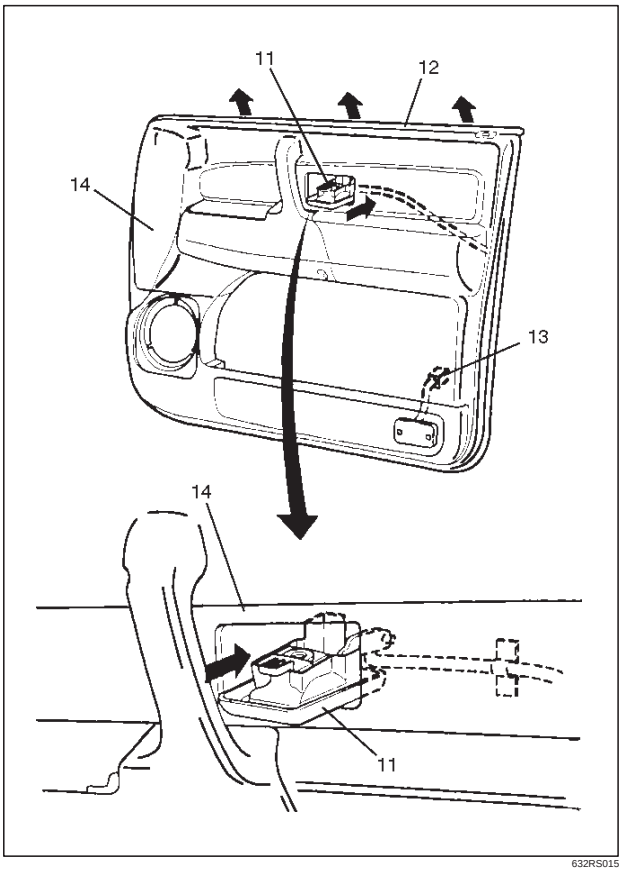

632RS015

9. Remove the inside handle.
10. Remove the door wood panel.
    - Refer to the Door Wood Panel Assembly in this section.

Downloaded from www.Manualslib.com manuals search engine

Installation

To install, follow the removal steps in the reverse order, noting the following point.

1. When installing the inside handle(2), assemble it temporarily to the inside handle link(1).

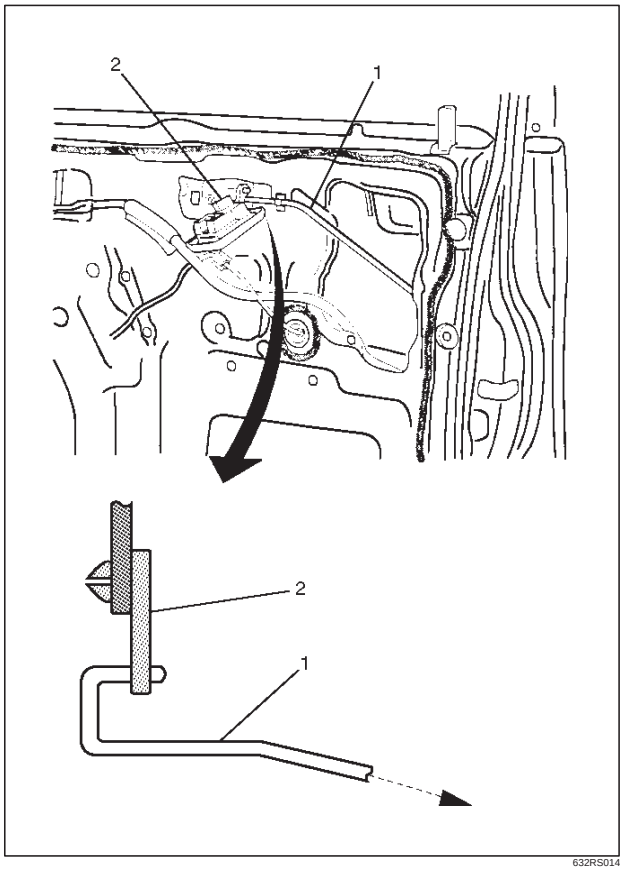

632RS014

2. Pass the inside handle(4) through the mounting hole of the trim panel and assemble the trim panel.

   Engage seven clips(8) into the door panel. Also, connect the courtesy light connector(5) and leave the connectors of the speaker(7), tweeter(9) and power window(3) drawn out to their prescribed positions, so that they will not be caught.

   Then, put the inside handle(4) to the normal position of the inside handle link(6).

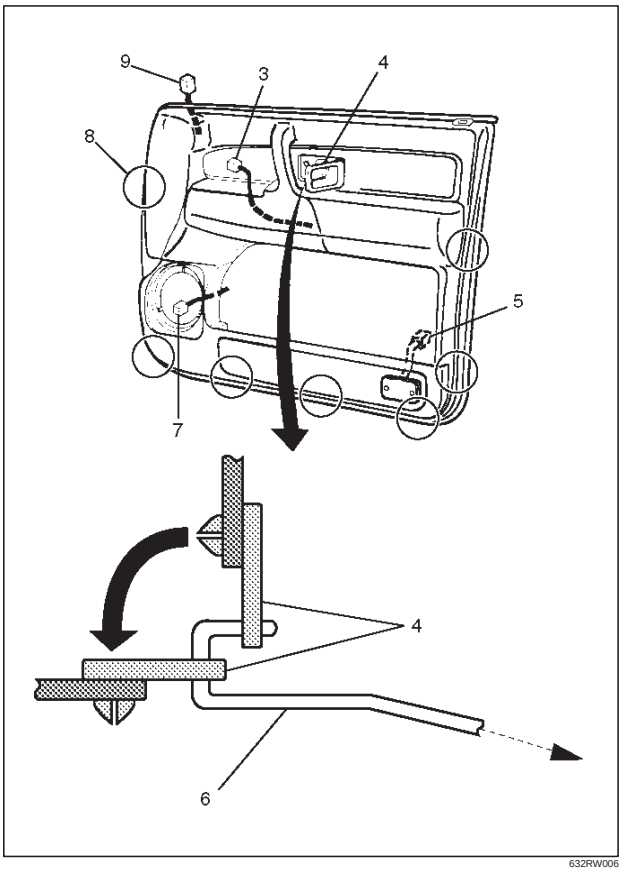

632RW006

3. Fit the claw(10) of the inside handle(11) securely into the hole of the door panel and fix the inside handle with the screw.

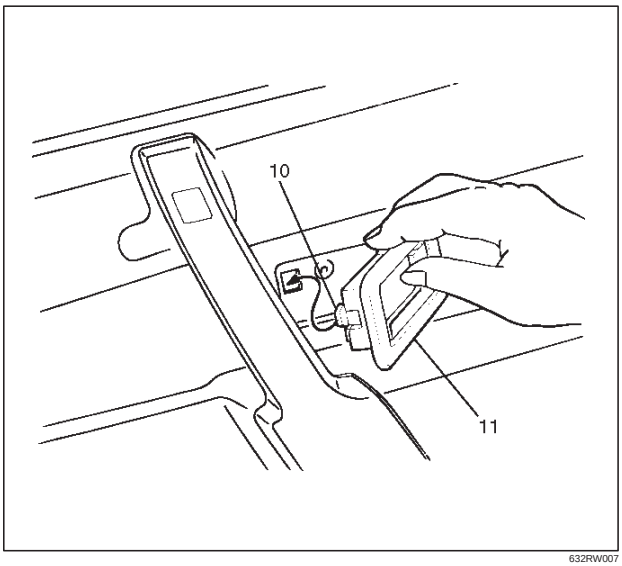

632RW007

Downloaded from www.Manualslib.com manuals search engine

Rear Door Trim Panel

Rear Door Trim Panel and Associated Parts

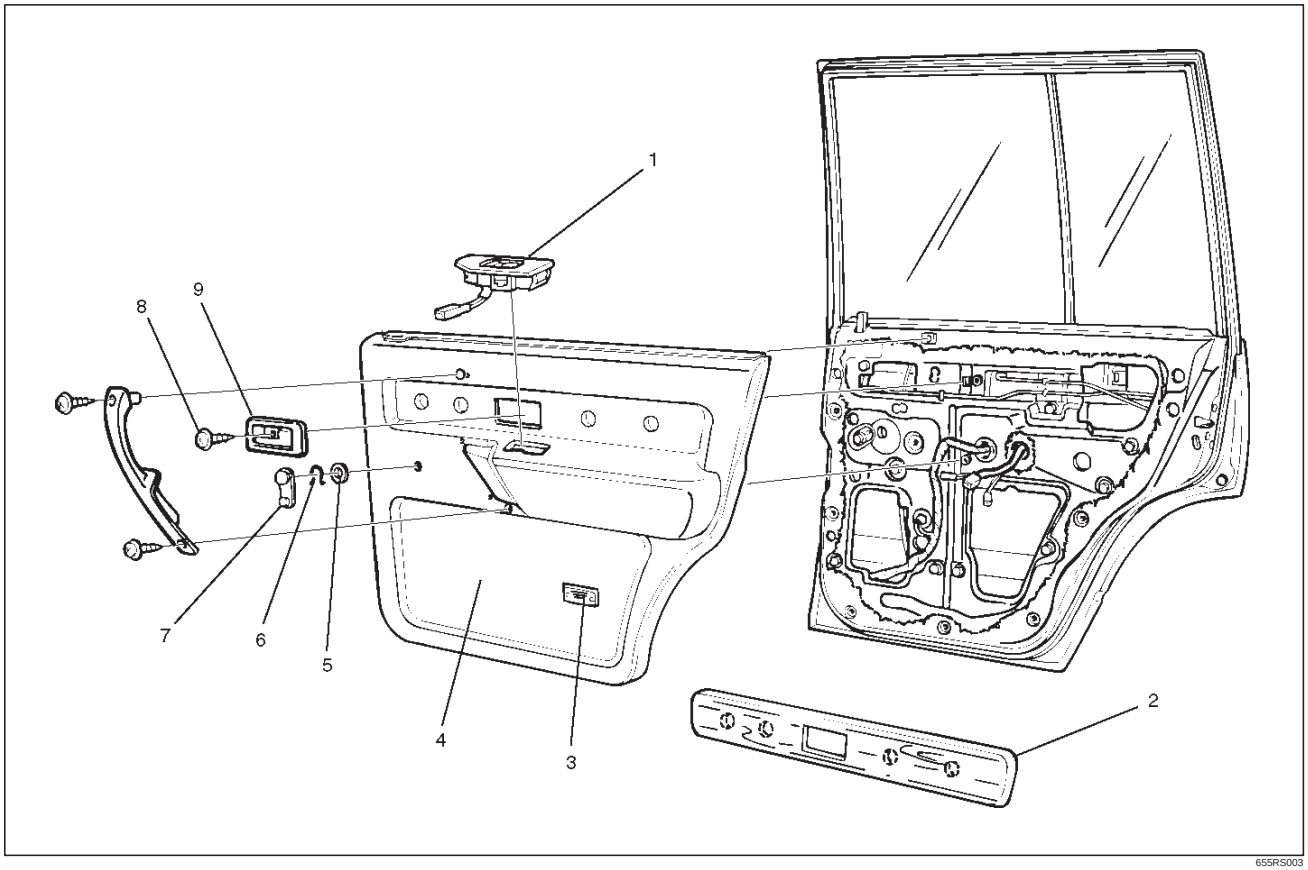

655RS003

Legend

(1) Power Window Switch
(2) Door Wood Panel
(3) Courtesy Light
(4) Door Trim Panel
(5) Washer
(6) Clip
(7) Regulator Handle
(8) Inside Handle Fixing Screw
(9) Inside Handle

Removal

1. Disconnect the battery ground cable.
2. Remove the regulator handle(1).
   - Pull the hook(2) out and remove the regulator handle.

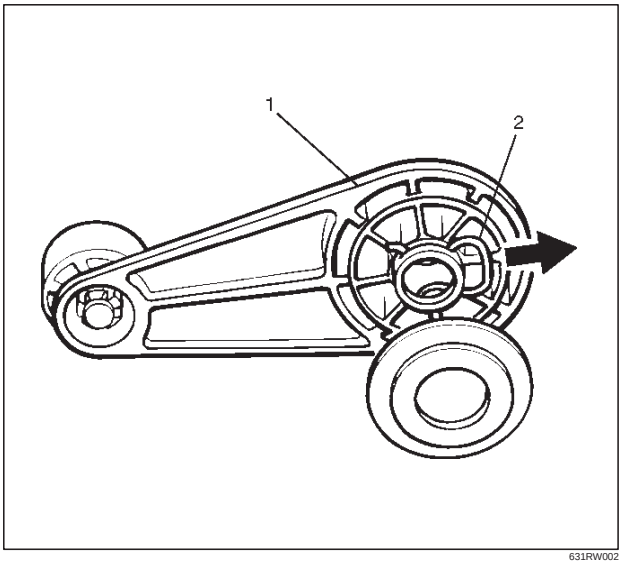

631RW002

Downloaded from www.Manualslib.com manuals search engine

3. Remove the power window switch(3).
   - Pry the power window switch out and disconnect the switch connector.

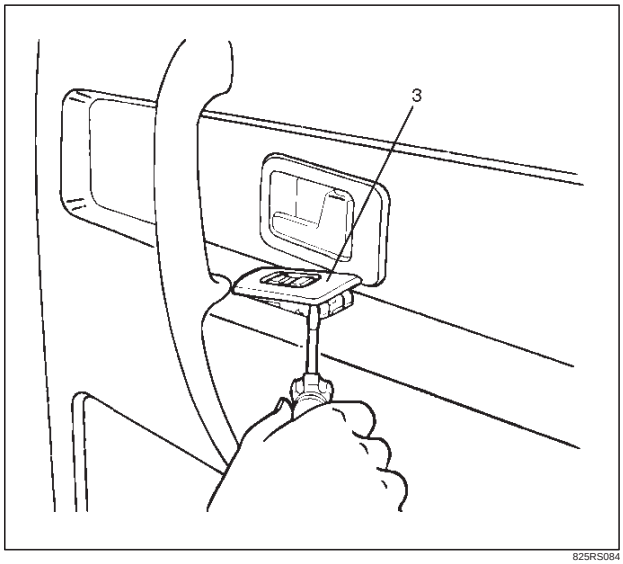

825RS084

4. Remove the inside handle fixing screw.
   - Remove the screw that fixes the inside handle(5), slide the inside handle to the position illustrated, and leave it there for the moment.

CAUTION: Take care not to impose excessive force on the inside handle link(4), lest this link be elongated, which could make it impossible to operate the door with the inside handle.

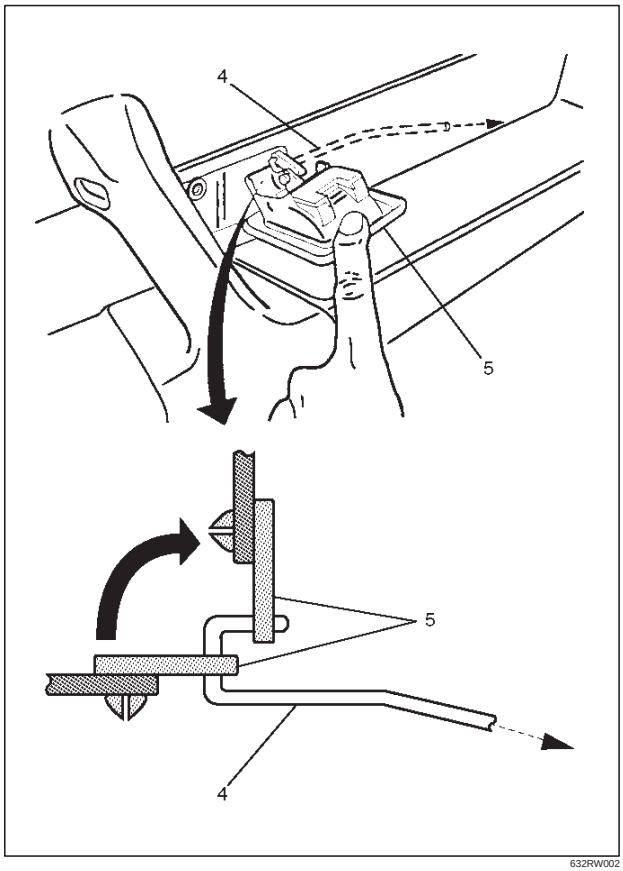

632RW002

5. Remove the door trim panel(6).
   - Remove two fixing screws(8) to take off seven clips(7) from the door panel.

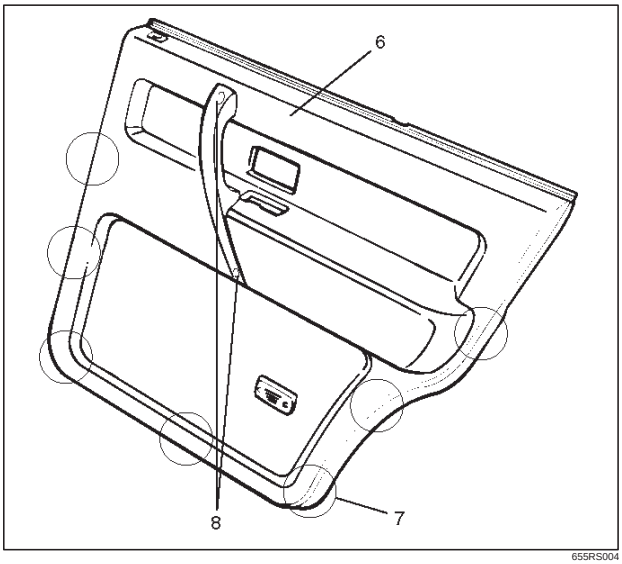

655RS004

   - Unplug the courtesy light connector to lift the trim panel and unlock the engagement of the waist seal section. Then, pass the inside lever through the mounting hole of the trim panel, and detach the trim panel.
6. Remove the inside handle.
7. Remove the door wood panel.
   - Refer to the Door Wood Panel Assembly in this section.

Installation

To install, follow the removal steps in the reverse order, noting the following point.

1. When installing the inside handle(1), assemble temporarily to the inside handle link(2).

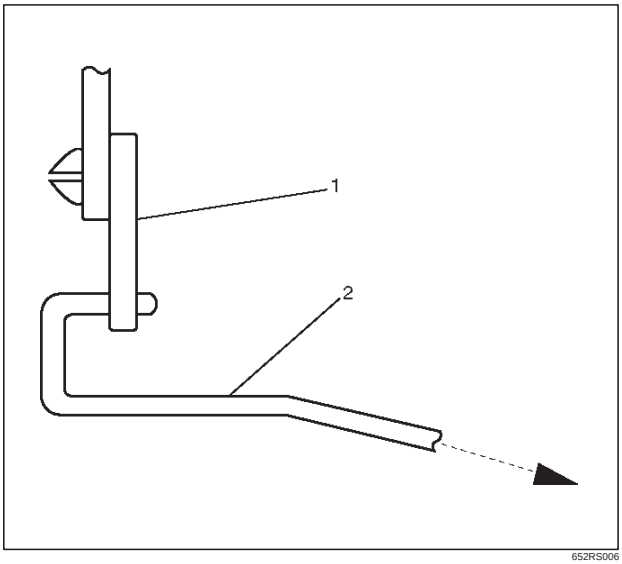

652RS006

Downloaded from www.Manualslib.com manuals search engine

2. Pass the inside handle through the mounting hole of the trim panel. Assemble the trim panel. Engage securely seven clips into the door panel. Also, connect the courtesy light connector. Leave the connector of the power window drawn out to its prescribed position, so that it will not caught.
3. Put back the inside handle(3) to the original position of the link(5). Fit the claw(4) of the inside handle securely into the hole of the door panel. Fix the handle with the screw.

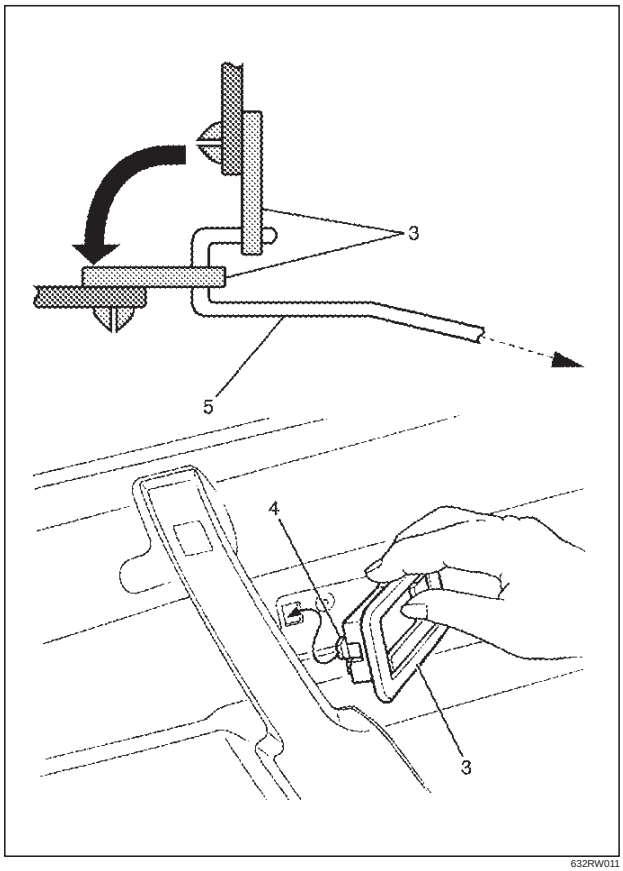

632RW011

Downloaded from www.Manualslib.com manuals search engine

Door Wood Panel Assembly

Door Wood Panel Assembly and Associated Parts

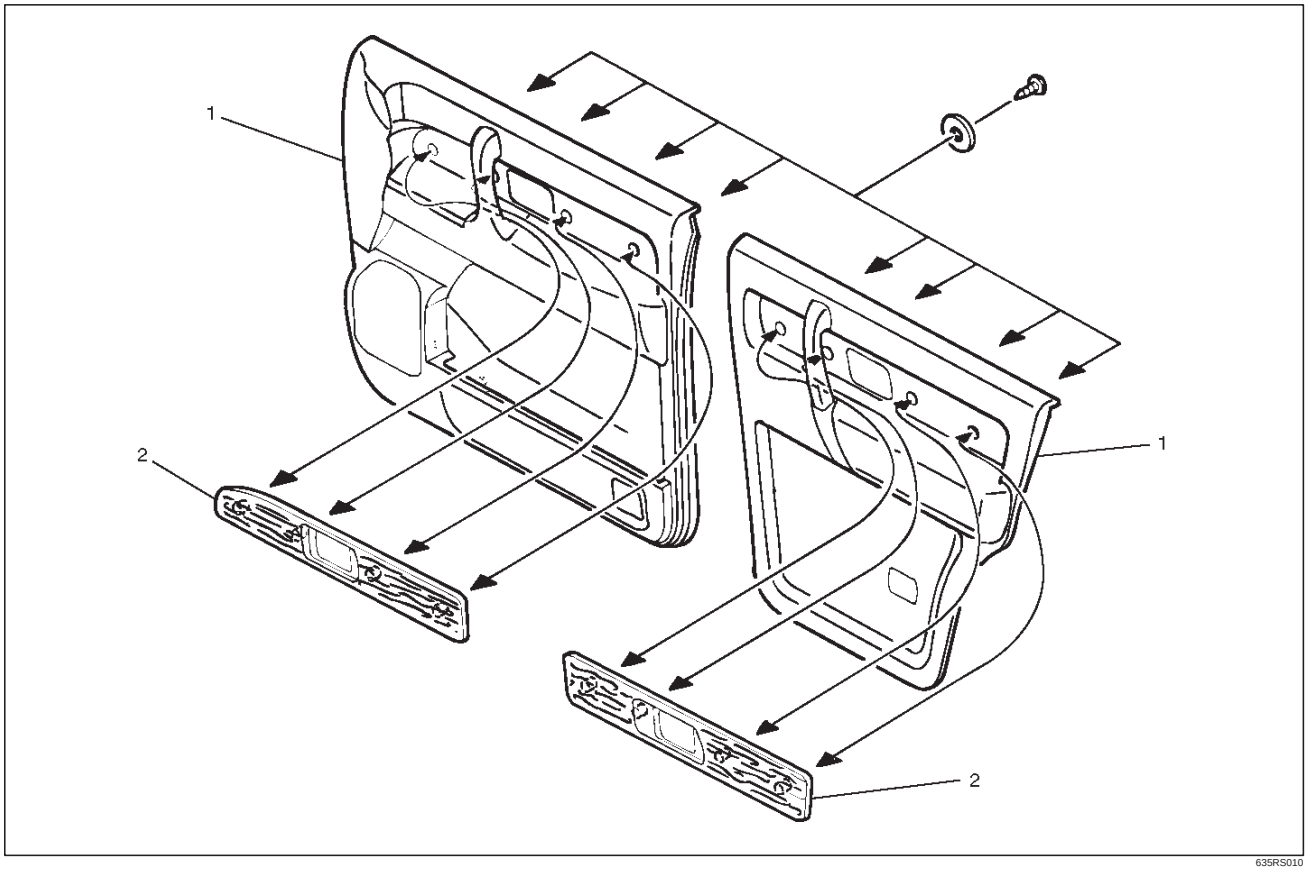

635RS010

Legend

(1) Door Trim Panel
(2) Door Wood Panel Assembly

Removal

1. Remove the door trim panel(1).
   - Refer to the Front / Rear Door Trim Panel in this section.
2. Remove the door wood panel assembly(2).
   - Remove four door wood panel assembly fixing screws and washers.

NOTE: The removal and installation steps are common to both front and rear doors.

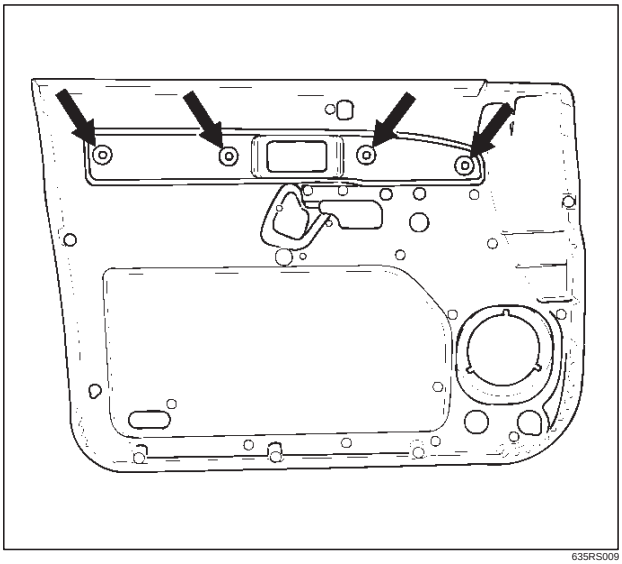

635RS009

Installation

To install, follow the removal steps in the reverse order.

Downloaded from www.Manualslib.com manuals search engine

Door Mirror

Door Mirror and Associated Parts

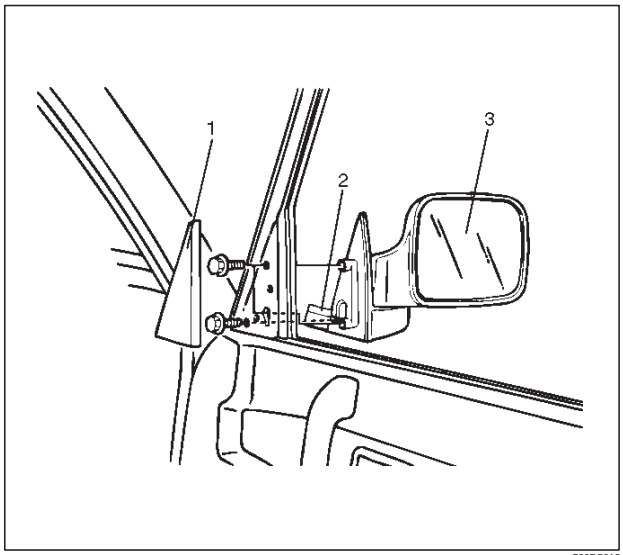

720RS012

Legend

(1) Door Mirror Cover / Tweeter
(2) Door Mirror Connector
(3) Door Mirror

Removal

1. Disconnect the battery ground cable.
2. Remove the door mirror cover(1).
   - Remove the connectors(2) and the door mirror cover, if equipped with a tweeter.

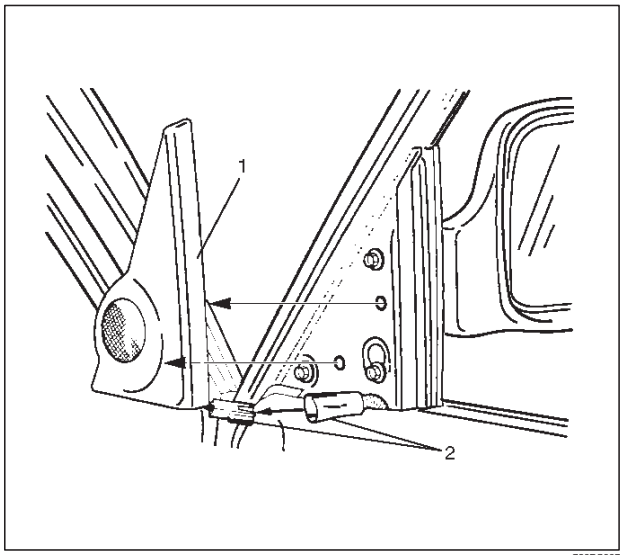

720RS007

3. Remove the door mirror connector.
4. Remove the door mirror.

Installation

To install, follow the removal steps in the reverse order, noting the following points.

1. When you install the door mirror, install the bolt(1) to the mirror temporarily, hook the bolt to the door side hole and tighten the bolt from the inside.

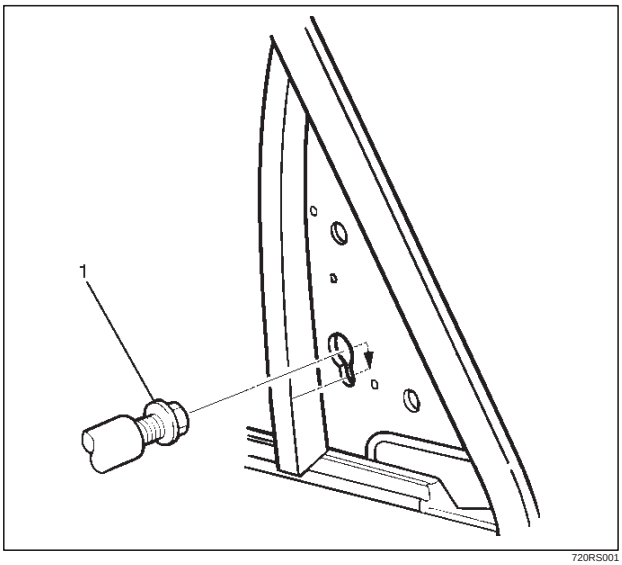

720RS001

2. When installing the door mirror, hold the glass run lip(2) between the door mirror base(3) and the center sash(4).

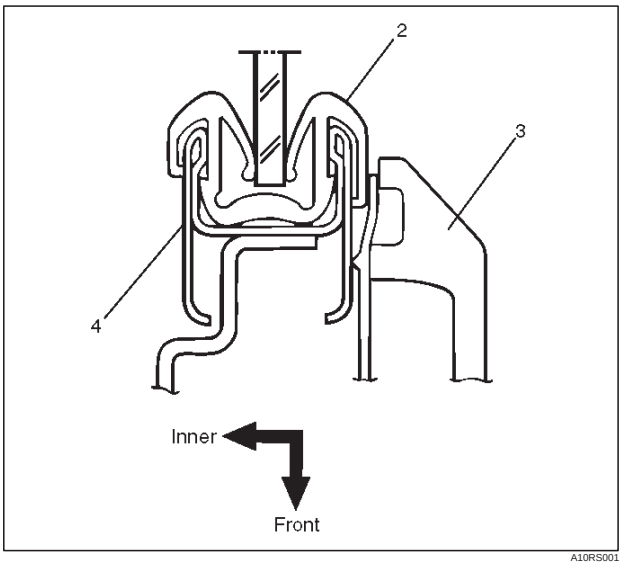

A10RS001

3. Tighten the door mirror fixing bolts to the specified torque.

   Torque: 8 N·m (69 lb in)

Downloaded from www.Manualslib.com manuals search engine

Luggage Side and Quarter Upper Trim Cover

Luggage Side, Quarter Upper Trim Cover and Associated Parts

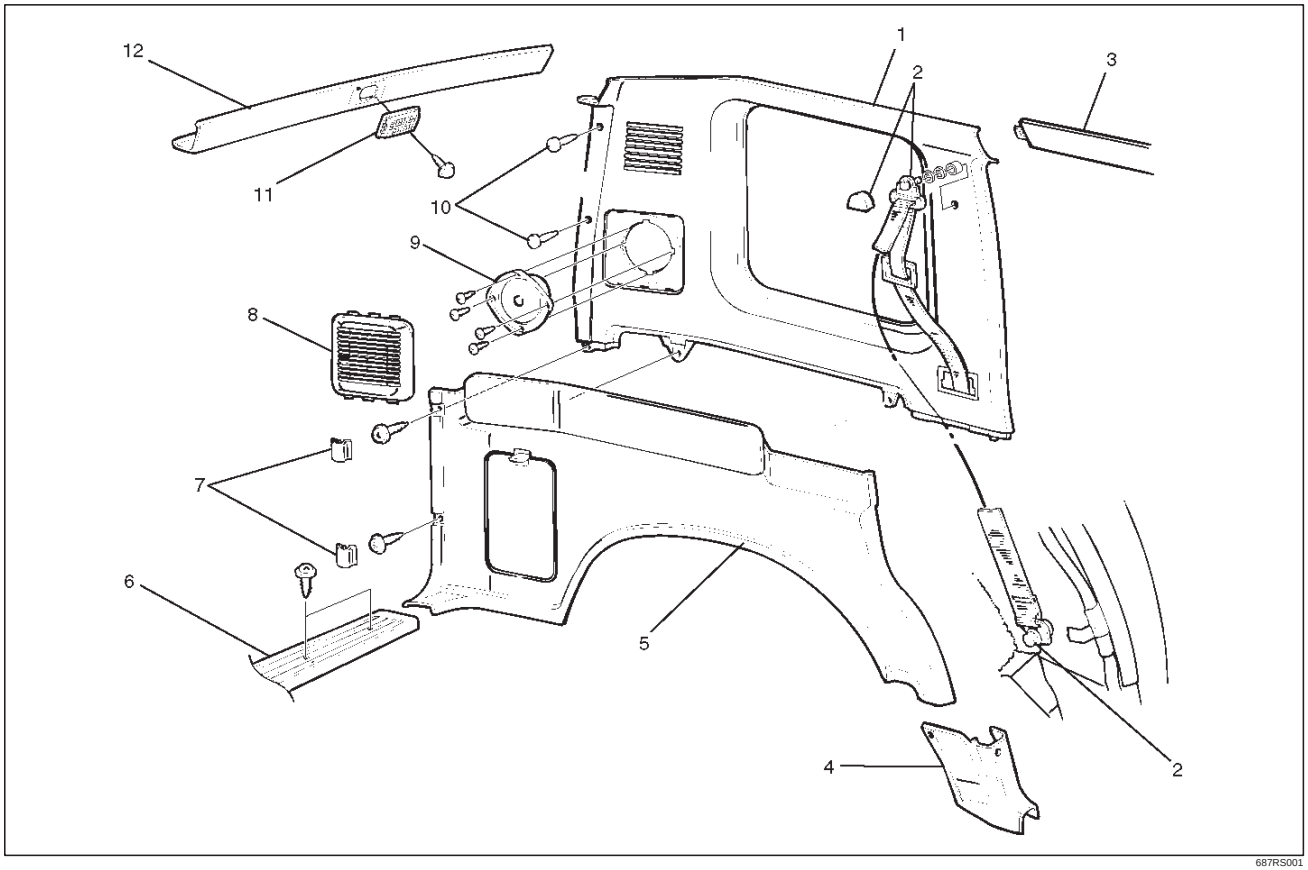

Legend

(1) Quarter Upper Trim Cover
(2) Rear Seat Belt Anchor Bolt Cover and Anchor Bolt
(3) Roof Side Trim Cover
(4) Luggage Side Lower Cover
(5) Luggage Side Trim Cover
(6) Rear End Floor Trim Cover
(7) Luggage Side Cap
(8) Speaker Grille
(9) Rear Speaker
(10) Clip
(11) Luggage Room Light
(12) Rear Roof Trim Cover

Removal

1. Disconnect the battery ground cable.
2. Remove the rear end floor trim cover.
3. Remove the luggage side cap.
4. Remove the luggage side lower cover.
5. Remove the luggage side trim cover (1).
   - Remove the rear side fixing screws and pry the trim cover retainers free from the body panel and the upper trim cover.

Downloaded from www.Manualslib.com manuals search engine

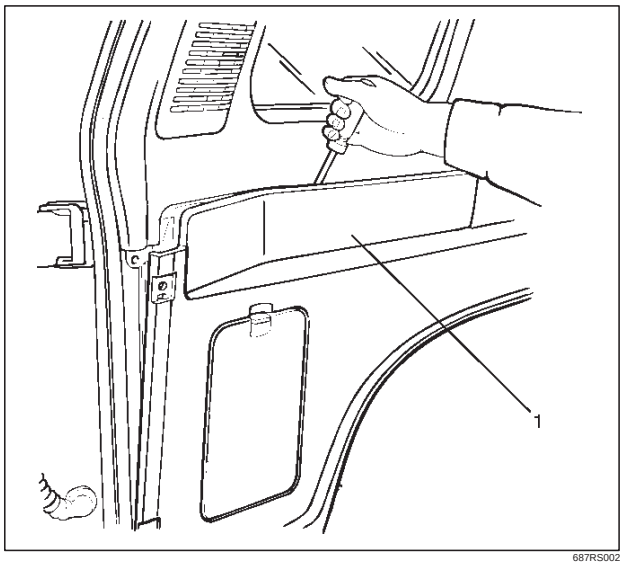

687RS002

6. Remove the luggage room light.
   - Remove the luggage room light lens and the fixing screws.
   - Disconnect the luggage room light connector.
7. Remove the rear roof trim cover.
   - Pry the trim cover retainers free from the body panel.

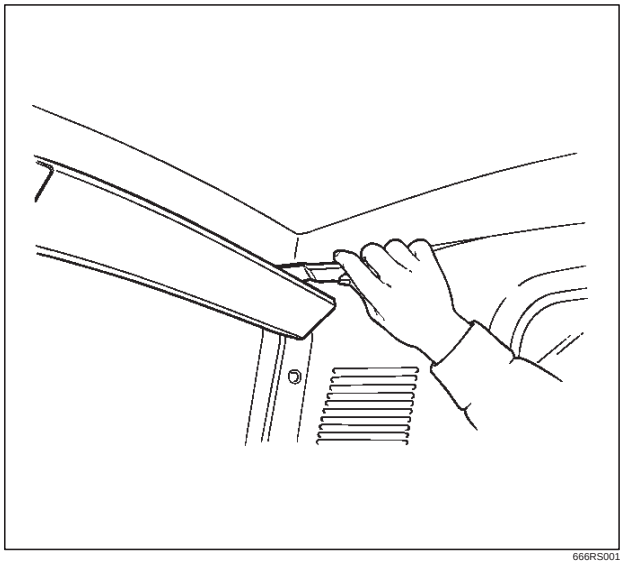

666RS001

8. Remove the speaker grille.

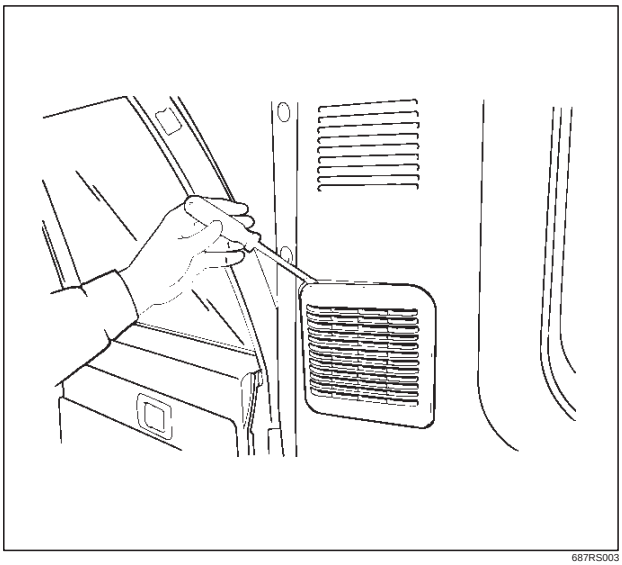

687RS003

9. Remove the rear speaker.
   - Remove the rear speaker fixing screws and disconnect the connector.
10. Remove the rear seat belt anchor bolt cover (2) and the anchor bolt (3).

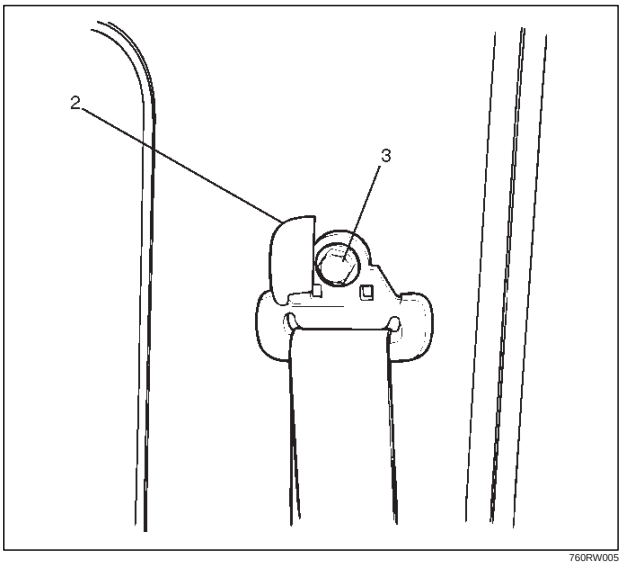

760RW005

11. Remove the quarter upper trim cover.
    - Remove the rear side clips of the trim cover and pry the quarter upper trim cover retainers free from the body panel.

Downloaded from www.Manualslib.com manuals search engine

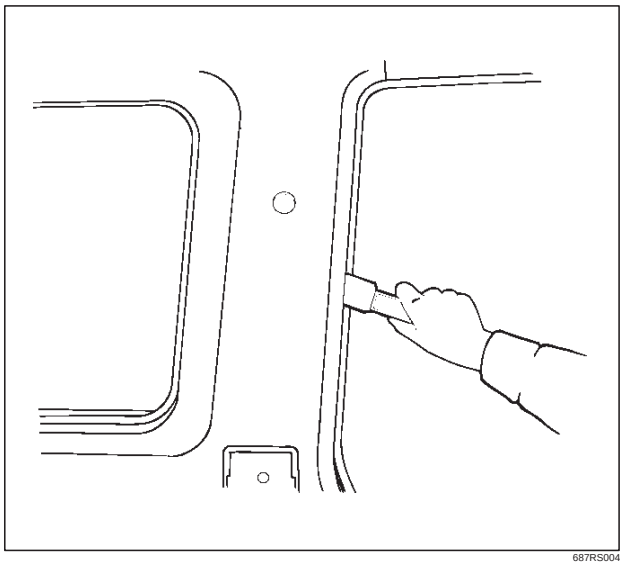

Installation

To install, follow the removal steps in the reverse order, noting the following point.

1. Tighten the seat belt anchor bolt to the specified torque.

   Torque: 39 N·m (29 lb ft)

Center Pillar and Roof Side Trim Cover

Center Pillar, Roof Side Trim Cover and Associated Parts

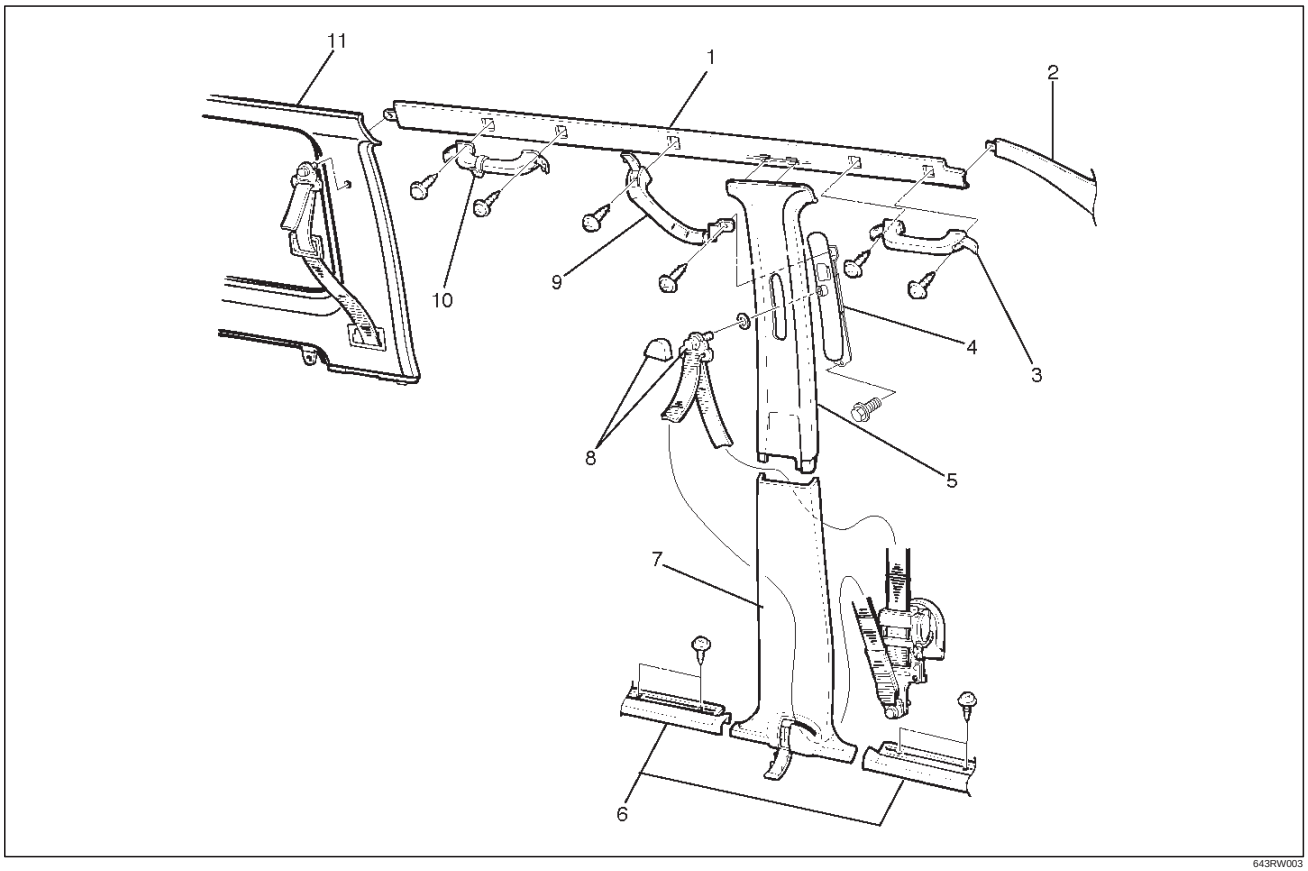

Legend

(1) Roof Side Trim Cover
(2) Front Pillar Trim Cover
(3) Assist Grip (RH only)
(4) Adjust Shoulder Anchor Assembly
(5) Center Pillar Upper Trim Plate
(6) Door Sill Plate (Front and Rear)
(7) Center Pillar Lower Trim Cover
(8) Front Seat Anchor Bolt Cover and Anchor Bolt
(9) Center Pillar Assist Grip
(10) Assist Grip
(11) Rear Quarter Upper Trim Cover

Downloaded from www.Manualslib.com manuals search engine

Removal

1. Disconnect the battery ground cable.
2. Remove the door sill plate (front and rear).
3. Remove the center pillar lower trim cover (2).
   - Turn up the finisher (1) and pry the trim cover retainers free from the body panel, then slide the trim cover downward.

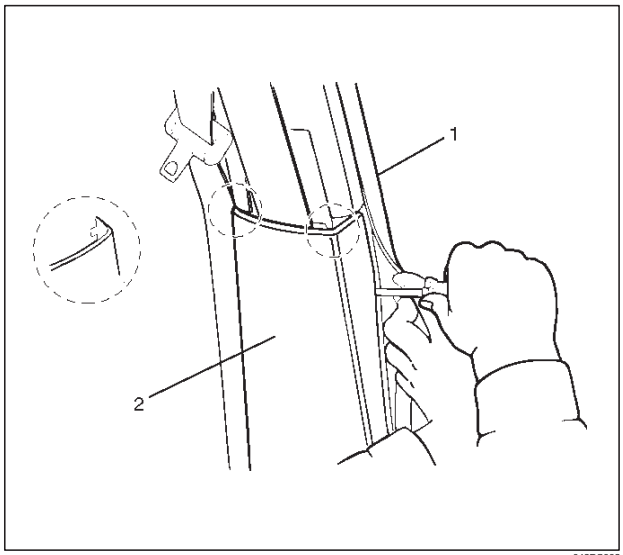

643RS003

4. Remove the front seat belt anchor bolt cover (3) and the anchor bolt (4).

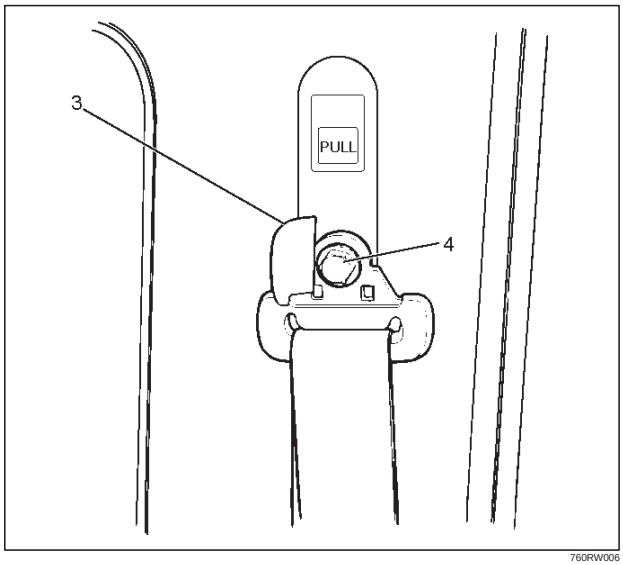

760RW006

5. Remove the center pillar upper trim cover (6).
   - Turn up the finisher (5) and pry the trim cover retainers free from the body panel.

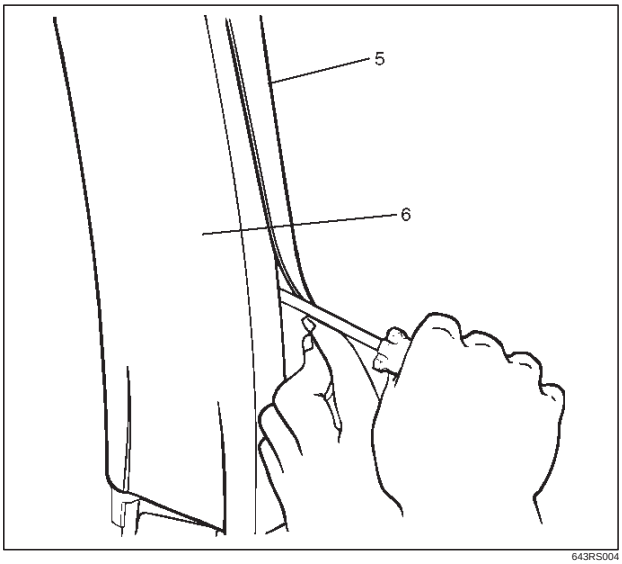

643RS004

6. Remove the center pillar assist grip.
7. Remove the seat belt anchor plate.
8. Remove the assist grip (7).
   - Open the both side of the assist grip cover (8) and remove two fixing screws.

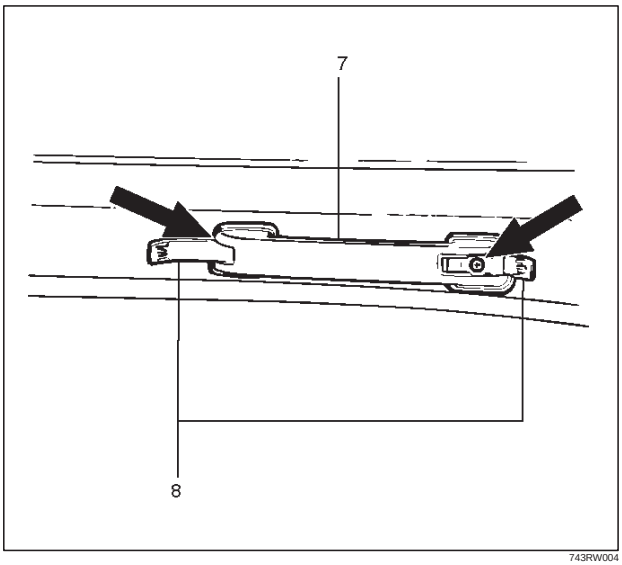

743RW004

Downloaded from www.Manualslib.com manuals search engine

9. Remove the roof side trim cover (9).
   - Turn up the finisher (10) and pry the trim cover retainers free from the body panel.

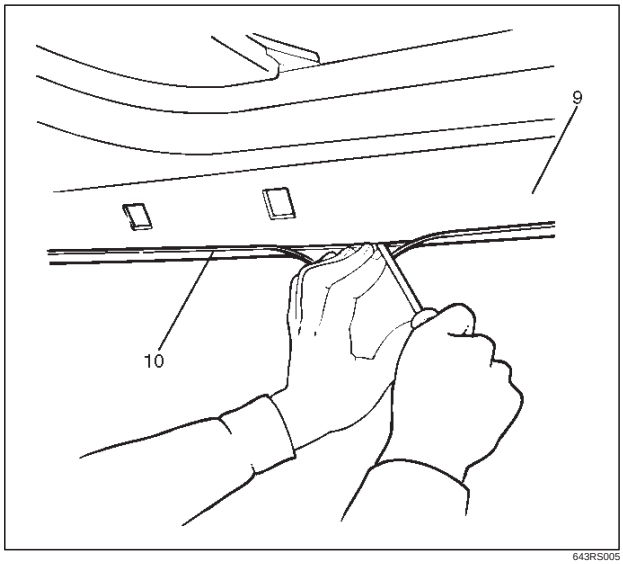

643RS005

Installation

To install, follow the removal steps in the reverse order, noting the following point.

1. Install the seat belt anchor bolts to the specified torque.

   Torque: 39 N·m (29 lb ft)

Front Pillar Trim Cover

Front Pillar Trim Cover and Associated Parts

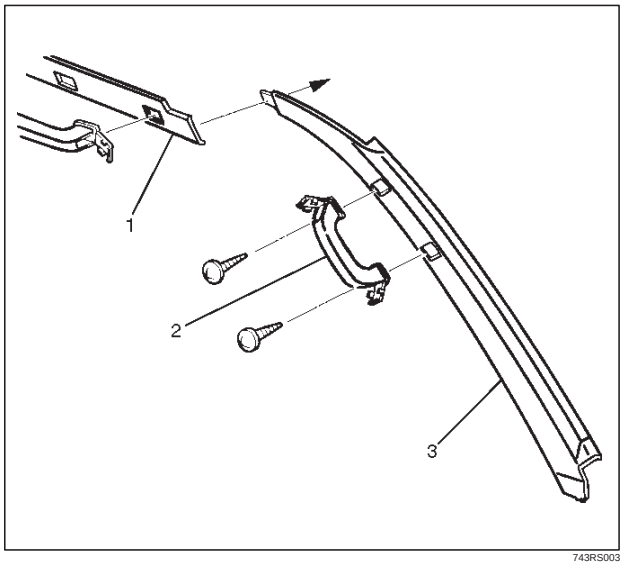

743RS003

Legend

(1) Roof Side Trim Panel
(2) Assist Grip (RH only)
(3) Front Pillar Trim Panel

Removal

1. Remove the front pillar assist grip(1).
   - Open the both sides of the assist grip cover (2) and remove the fixing screws and the front pillar assist grip.

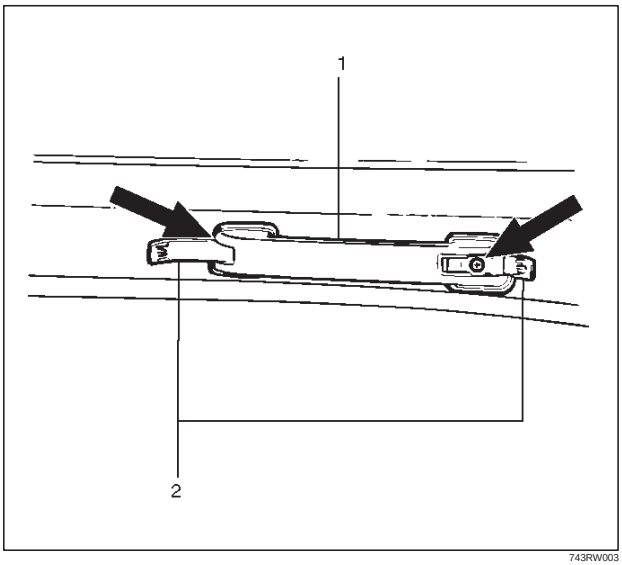

743RW003

Downloaded from www.Manualslib.com manuals search engine

2. Remove the front pillar trim cover (3).
   - Turn up the finisher (4) and pry the trim cover retainers free from the body panel.

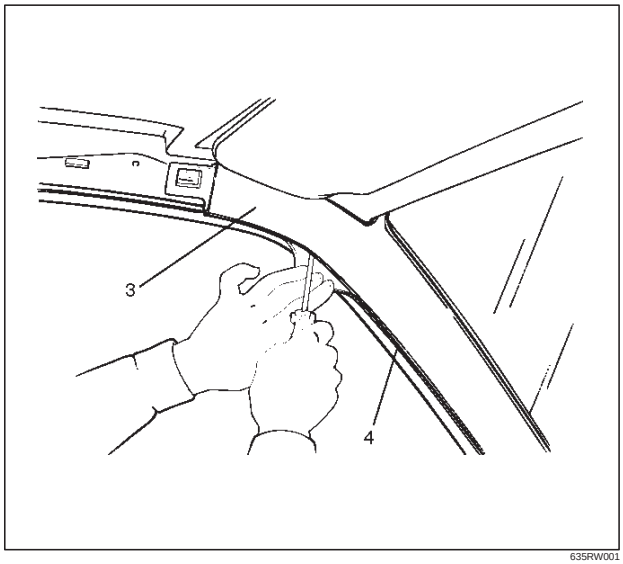

635RW001

Installation

To install, follow the removal steps in the reverse order.

Center Pillar Assist Grip

Parts Location

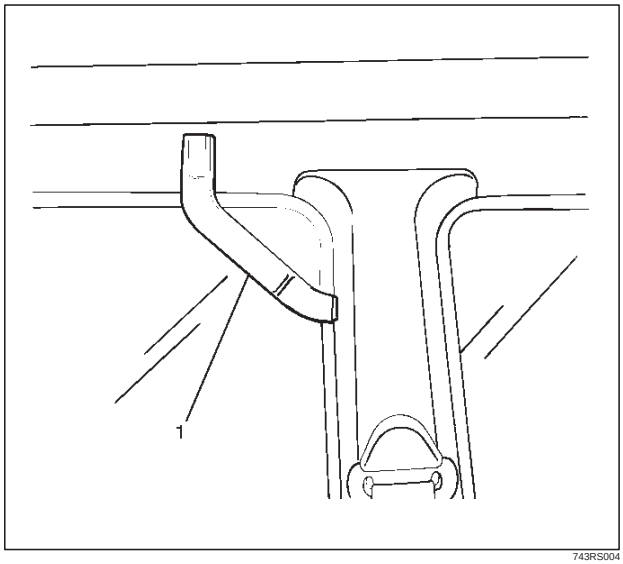

743RS004

Legend

(1) Center Pillar Assist Grip

Removal and Installation

Refer to the Center Pillar and Roof Side Trim Cover in this section.

Downloaded from www.Manualslib.com manuals search engine

Assist Grip

Parts Location

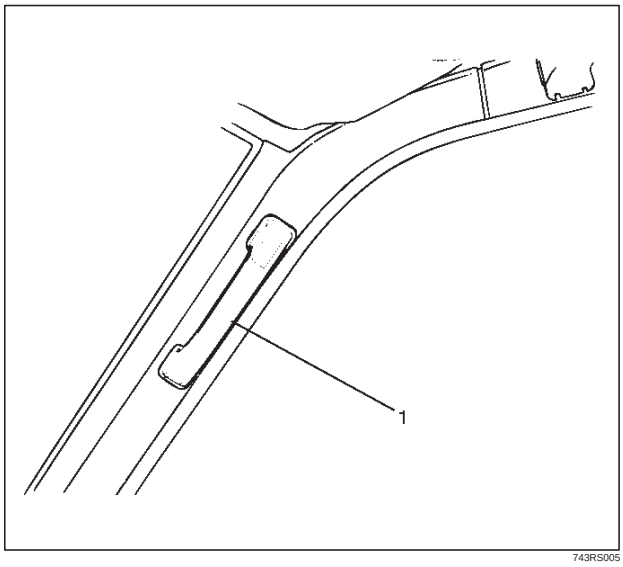

Legend
(1) Assist Grip

Removal and Installation

Refer to the Center Pillar and Roof Side Trim Cover in this section.

Downloaded from www.Manualslib.com manuals search engine

Fuel Filler Lid Opener Cable

Fuel Filler Lid Opener Cable and Associated Parts

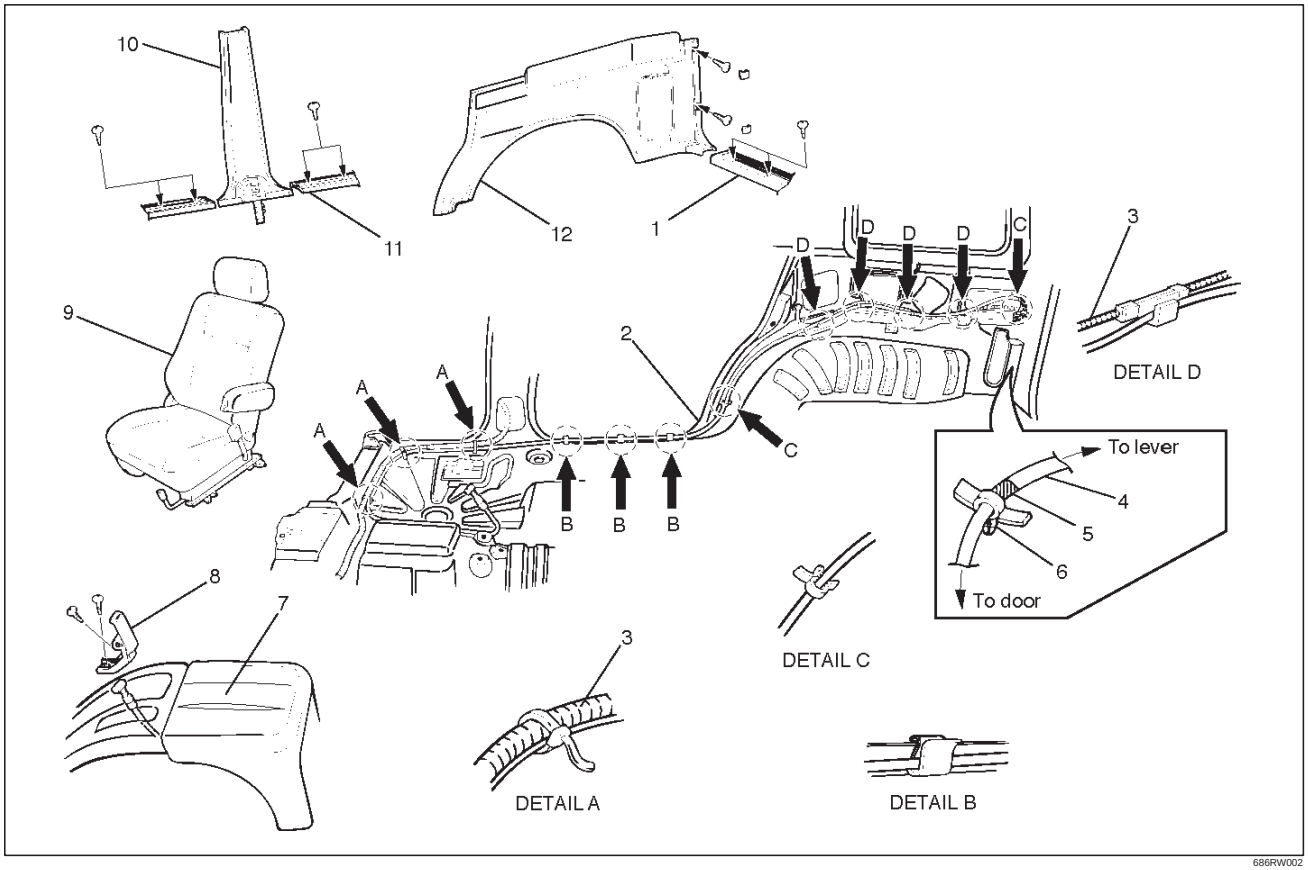

Legend

(1) Rear End Floor Trim Cover
(2) Fuel Filler Lid Opener Cable
(3) Chassis Harness
(4) Cable
(5) Marking
(6) Clip
(7) Center Console Assembly
(8) Fuel Filler Lid Opener
(9) Front Seat (RH)
(10) Center Pillar Lower Trim Cover
(11) Rear Door Sill Plate (RH)
(12) Luggage Side Trim Panel (RH)

Removal

1. Disconnect the battery ground cable.
2. Remove the front seat (RH).
3. Remove the rear door sill plate (RH).
4. Remove the center pillar lower trim cover.
5. Remove the rear end floor trim panel.
6. Remove the luggage side trim panel (RH).
   - Refer to the Luggage Side and Quarter Upper Trim Cover in this section.

Downloaded from www.Manualslib.com manuals search engine

7. Remove the fuel filler lid opener(1).
   - Remove two opener fixing screws and disconnect the cable(2).

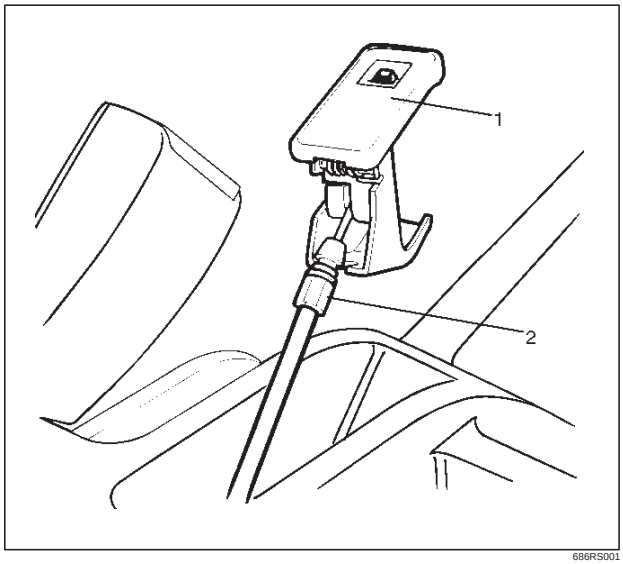

686RS001

8. Remove the center console assembly.
9. Remove the filler lid opener cable.
   - Roll up the floor carpet and remove the clips of the chassis harness and body panel to pull out the cable toward the fuel filter lid.

Installation

To install, follow the removal steps in the reverse order, noting the following points.

1. Insert the opener cable(2) into the body panel(1) securely.

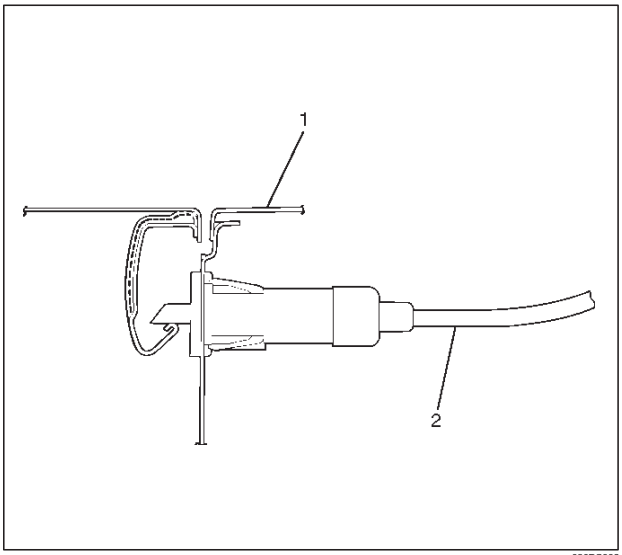

686RS002

2. Install the cable and clips to its original position to the chassis harness and the body panel.
3. Check that the opener operates smoothly.

Fuel Filler Door

Parts Location

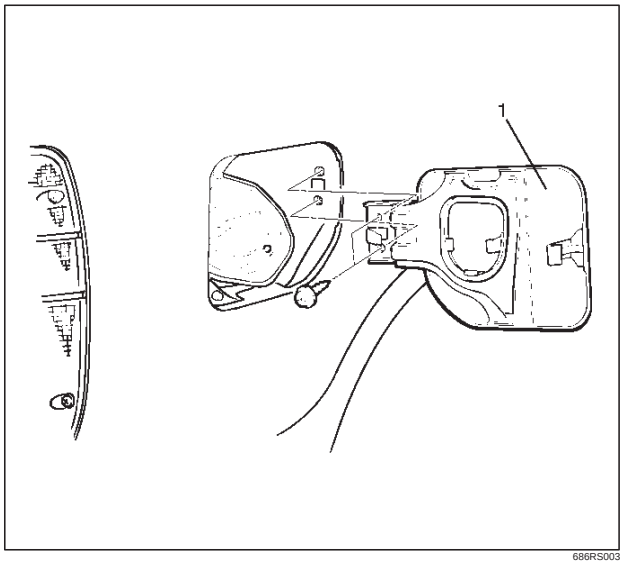

686RS003

Legend

(1) Fuel Filler Door

Removal

1. Remove the fuel filler door.

Installation

1. Install the fuel filler door.

Downloaded from www.Manualslib.com manuals search engine

Rocker Protector (Without Wheel Opening Extension)

Rocker Protector (Without Wheel Opening Extension) and Associated Parts

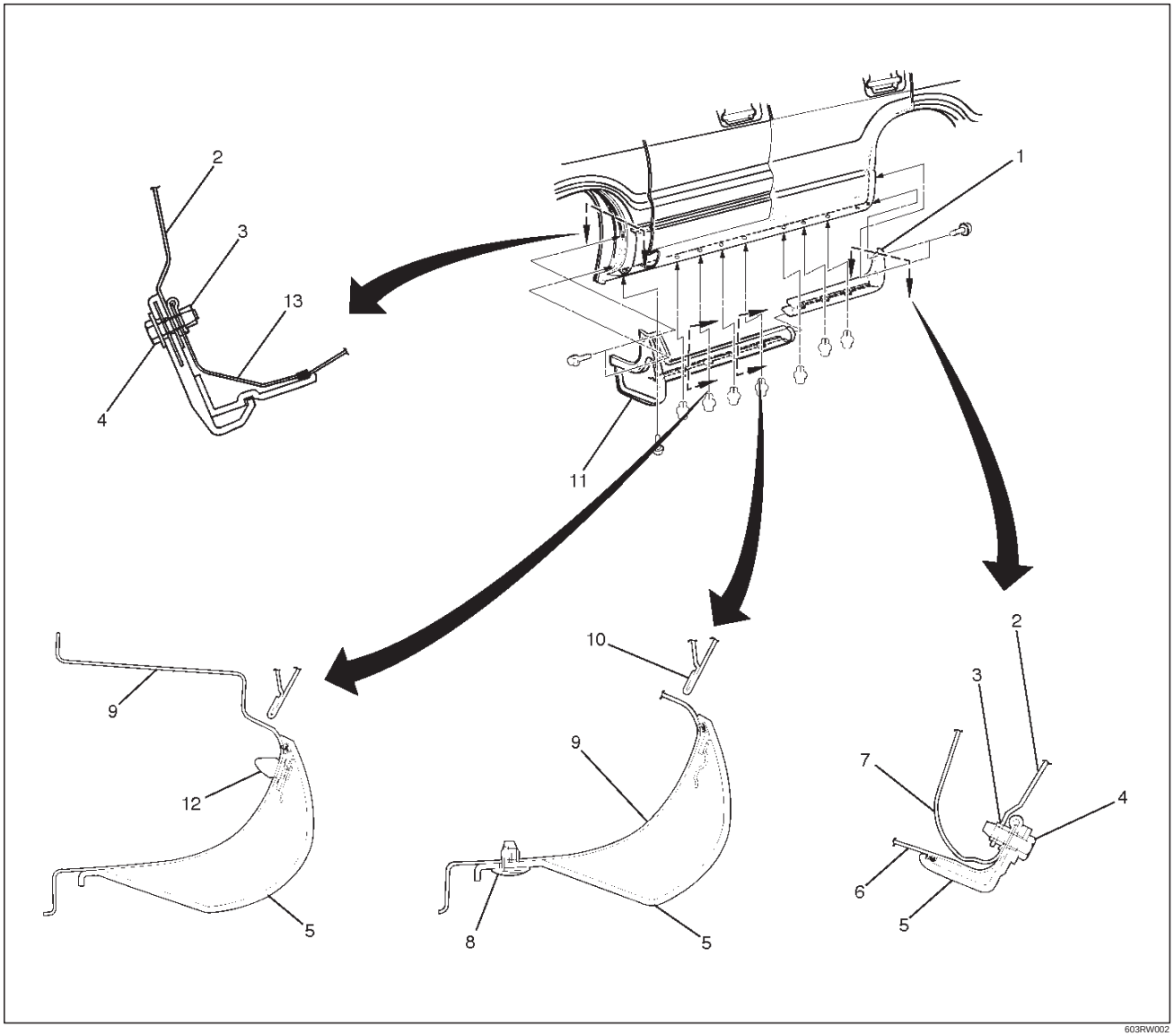

Legend

(1) Rear Rocker Protector
(2) Inner Liner
(3) Spare Nut
(4) Fixing Screw
(5) Rocker Protector
(6) Outer Side Panel
(7) Outer Wheel House Panel
(8) Fixing Clip
(9) Outer Rocker Panel
(10) Door Panel
(11) Front Rocker Protector
(12) Clip (W/Rocker Protector)
(13) Fender Panel

Removal

1. Remove the rear rocker protector.
2. Remove the front rocker protector.

Installation

To install, follow the remove steps in the reverse order.

Downloaded from www.Manualslib.com manuals search engine

Wheel Opening Extension and Rocker Protector Assembly

Wheel Opening Extension, Rocker Protector Assembly and Associated Parts

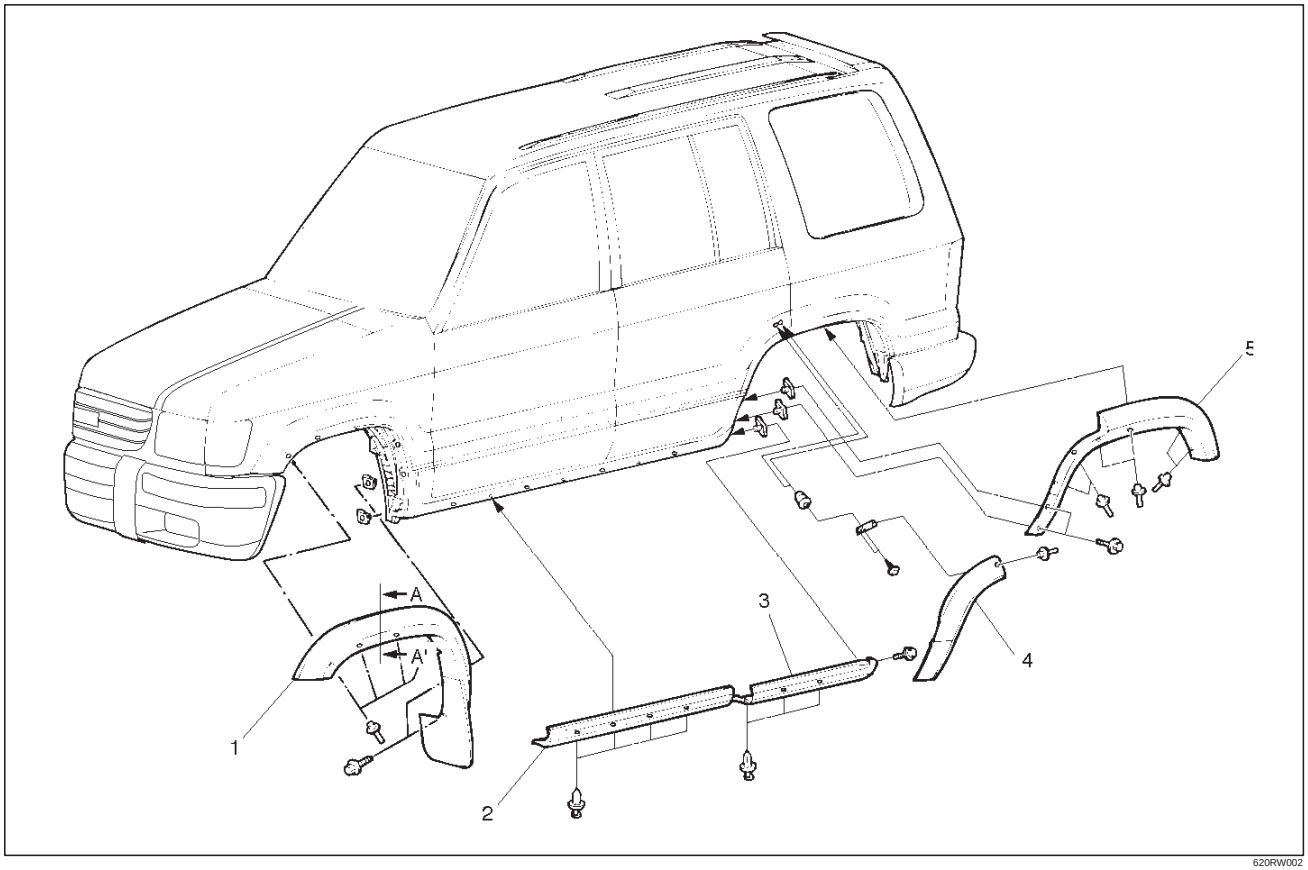

620RW002

Legend

(1) Front Wheel Opening Extension Assembly
(2) Front Rocker Protector Assembly
(3) Rear Rocker Protector Assembly
(4) Rear Quarter Wheel Opening Extension Assembly
(5) Rear Door Wheel Opening Extension Assembly

Removal

1. Remove the front rocker protector assembly.
   - Loosen and pull clips, and remove the front rocker protector assembly.
2. Remove the rear rocker protector assembly.
   - Loosen and pull three clips, remove a rear screw, and remove the rear rocker protector assembly.
3. Remove the front wheel opening extension(2).
   - Let a 5mm drill(3) go through four blind rivets(5) to disengaged riveted portions.
     Remove two screws and disengage five clips, then remove the front wheel opening extension assembly.

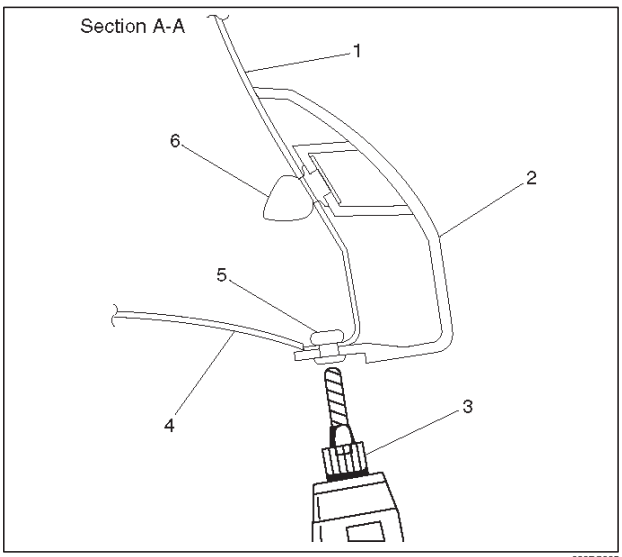

620RS005

Downloaded from www.Manualslib.com manuals search engine

4. Remove the rear quarter wheel opening extension assembly.
   - Let a 5mm drill go through six blind rivets to disengage riveted portions.
     Disengage four clips, remove two screws, and remove the rear quarter wheel opening extension assembly.
5. Remove the rear door wheel opening extension assembly.
   - Let a 5mm drill go through a blind rivet to disengage riveted portions.
     Disengage three clips, peel off the bonded portions with two double surface adhesive tape and the rear door wheel opening extension assembly.

Installation

To install, follow the removal steps in the reverse order, noting the following points.

1. Use a new 2–sided adhesive tape whenever installing each wheel opening extension assembly and rocker protector assembly. Using a white gasoline, clean the places in advance where a 2–sided adhesive tape is affixed. Also, install the clips, screws and blind rivets in the order specified as shown in the figure.

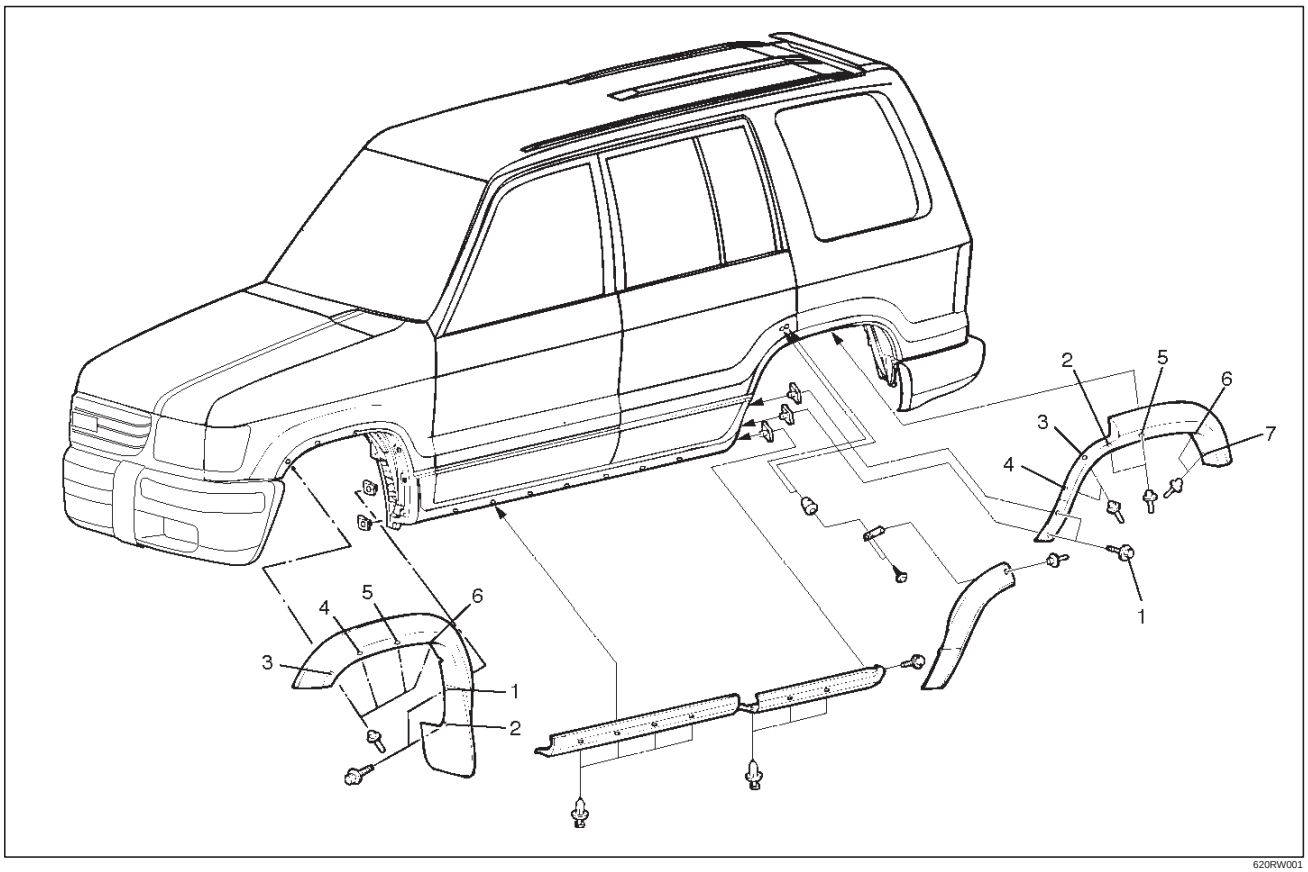

Downloaded from www.Manualslib.com manuals search engine

Mud Flaps (With Wheel Opening Extension)

Mud Flaps (With Wheel Opening Extension) and Associated Parts

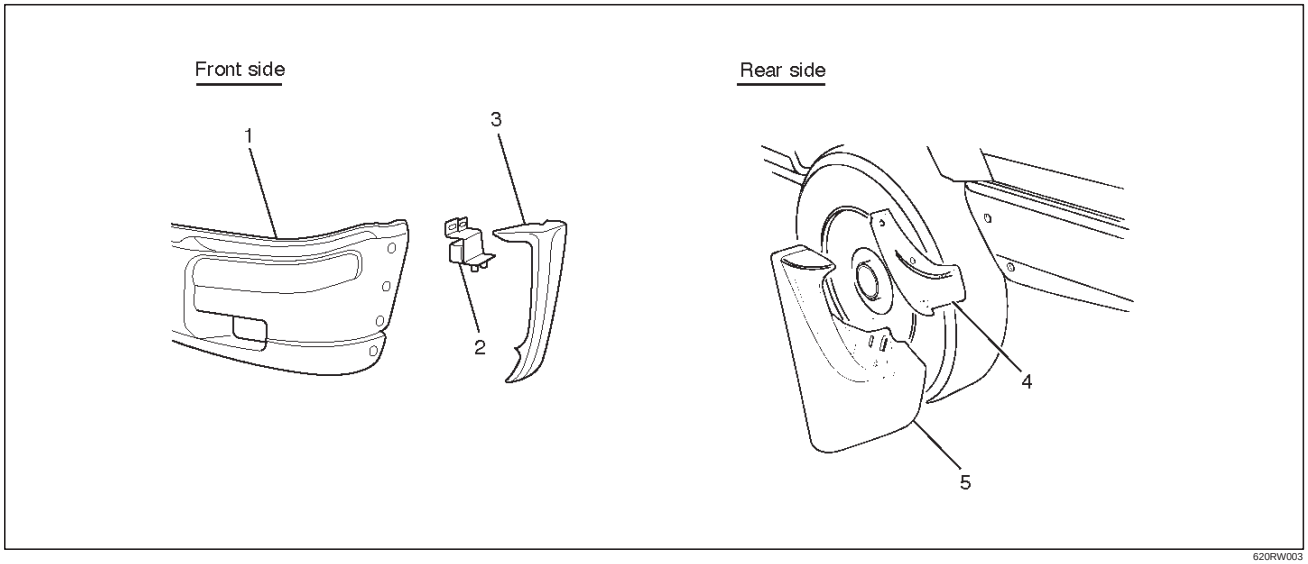

620RW003

Legend

(1) Front Bumper Assembly
(2) Front Bumper Slider
(3) Front Mud Flap
(4) Bumper Side Cover
(5) Rear Mud Flap

Removal

Front Side

1. Remove the front bumper assembly.
   - Disconnect the front fog light connector and remove two bolts from both sides of the front bumper.
2. Remove the front bumper slider(1).
   - Remove two clips(4) and two nuts(3), release the claw from the washer(2).

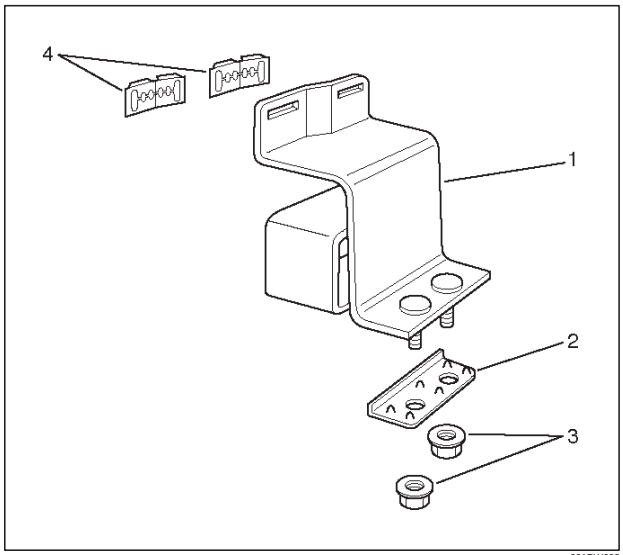

601RW009

3. Remove the front mud flap.
   - Remove four nuts and a clip.

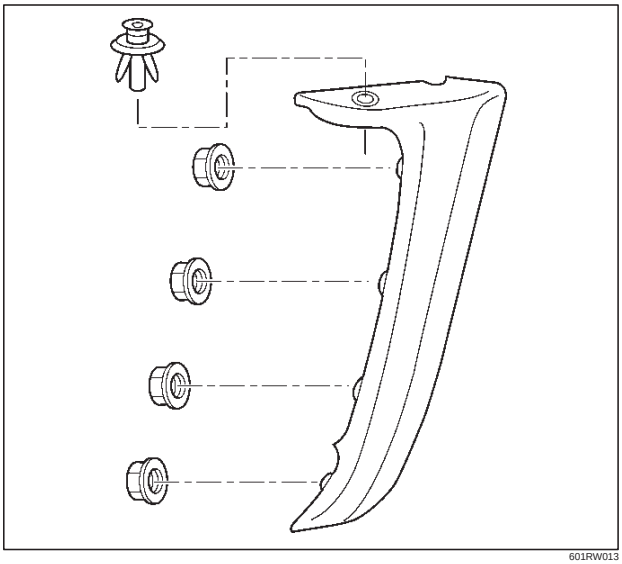

601RW013

Rear Side

1. Remove the bumper side cover.
2. Remove the rear mud flap.
   - Remove four bolts and two nuts.

Installation

To install, follow the removal steps in the reverse order.

Downloaded from www.Manualslib.com manuals search engine

Ventilation Assembly

Ventilation Assembly and Associated Parts

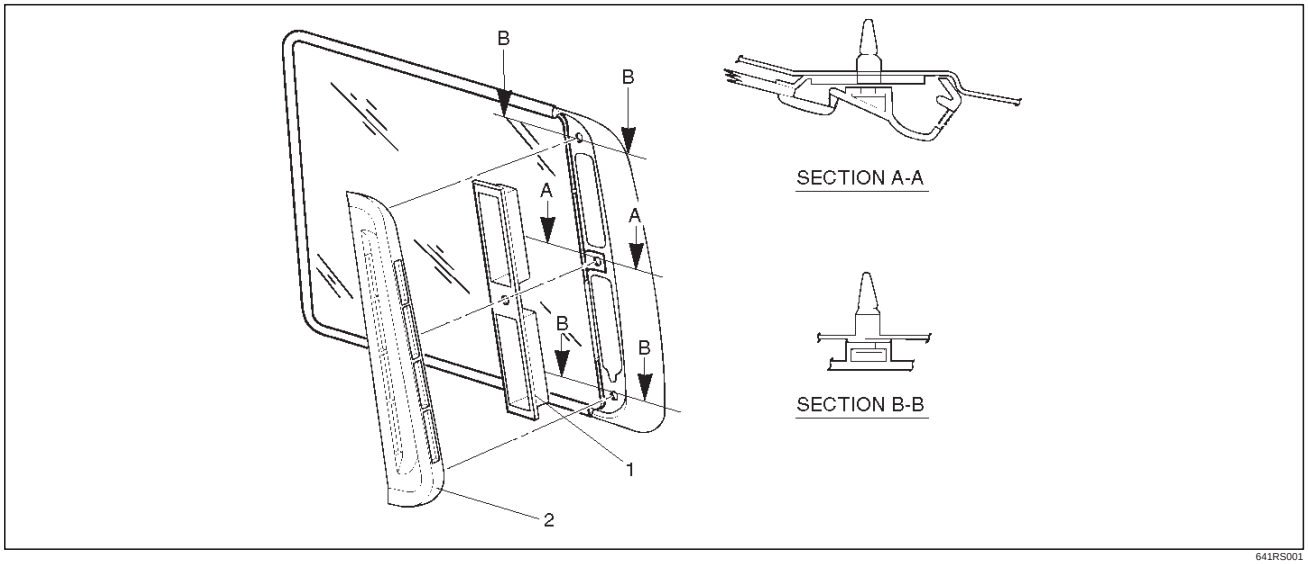

641RS001

Legend

(1) Outlet Valve Assembly
(2) Ventilation Assembly

Removal

1. Remove the ventilation assembly(1).
   - Pry the ventilation assembly retainers free from the body panel.

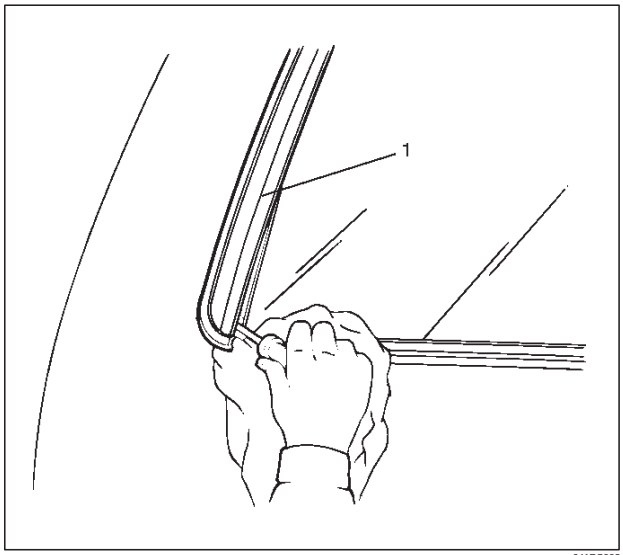

641RS002

2. Remove the outlet valve assembly.

Installation

1. Install the outlet valve assembly.
   - Insert the upper and lower catches of the outlet valve into the body panel flange and fix them securely.
2. Install the ventilation assembly.
   - Fix the clips to the body panel securely so that the ventilation assembly will not come off the body panel.

Downloaded from www.Manualslib.com manuals search engine

Tailgate Trim Panel (LH)

Tailgate Trim Panel (LH) and Associated Parts

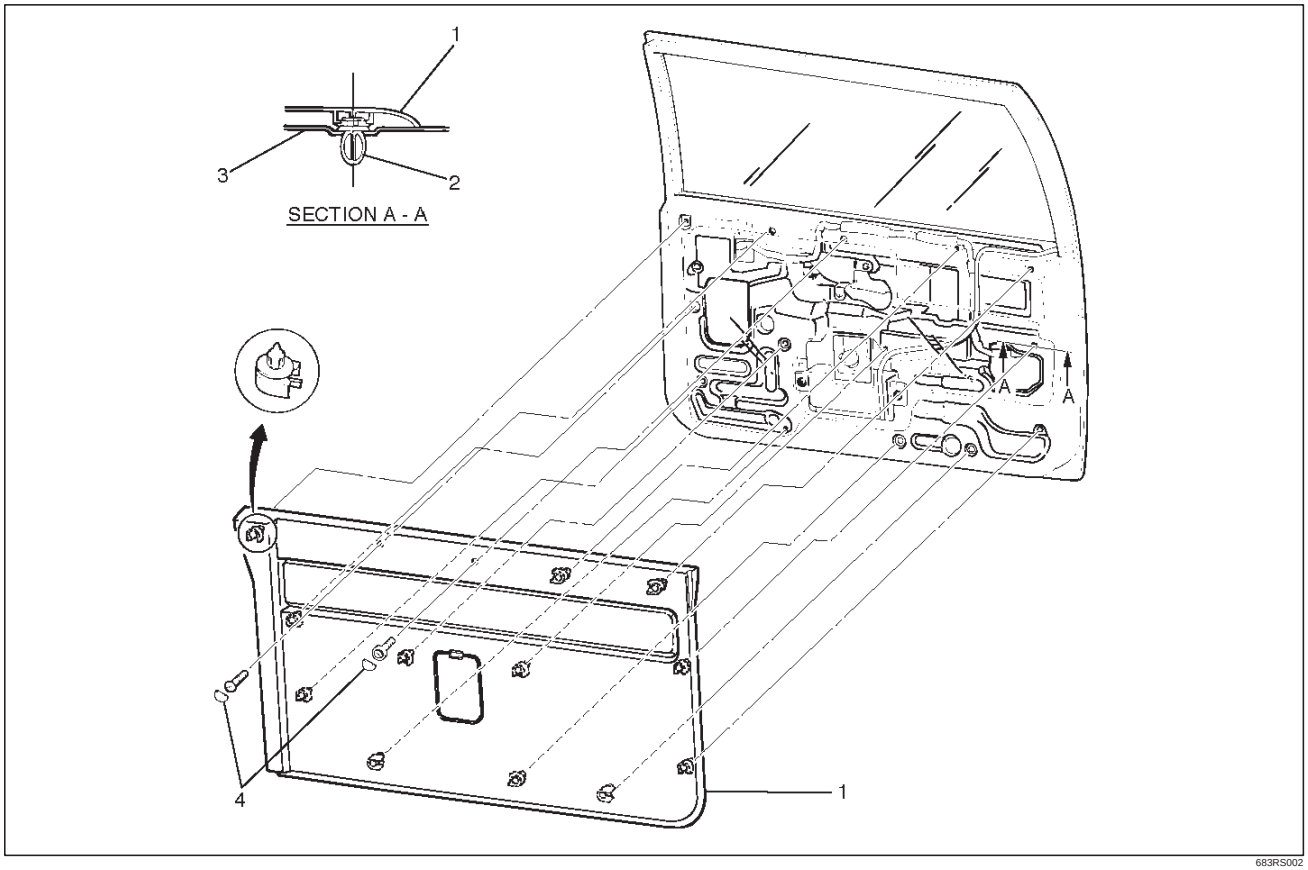

683RS002

Legend

(1) Tailgate Trim Panel (LH)
(2) Clip
(3) Tailgate Panel
(4) Cap and Screw

Removal

1. Disconnect the battery ground cable.
2. Remove the cap and screw.
3. Remove the tailgate trim panel (LH).
   - Pry the trim panel retainers free from the tailgate panel.

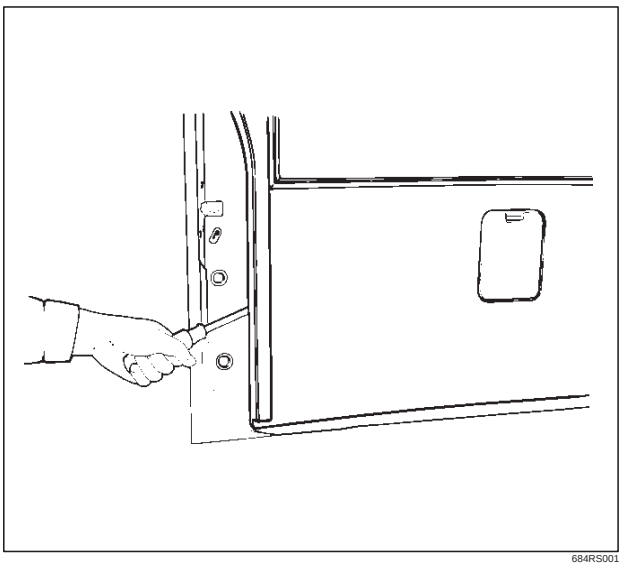

684RS001

Installation

To install, follow the removal steps in the reverse order.

Downloaded from www.Manualslib.com manuals search engine

Tailgate Trim Panel (RH)

Parts Location

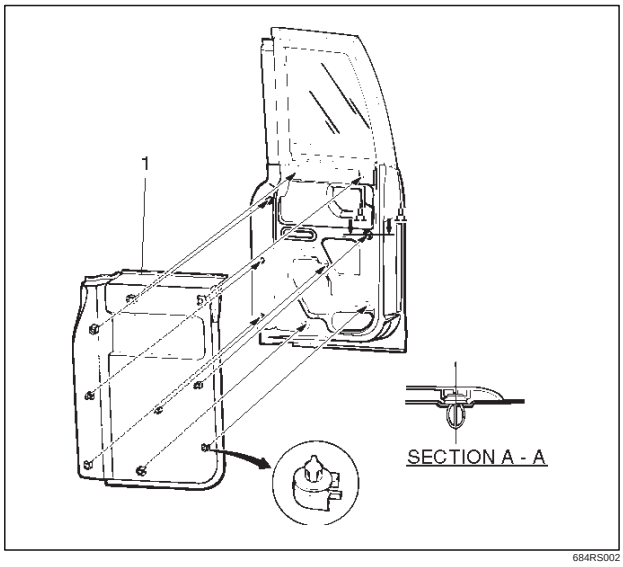

Legend
(1) Tailgate Trim Panel

Removal

1. Disconnect the battery ground cable.
2. Remove the tailgate trim panel (RH).
   - Pry trim panel retainer free from the tailgate panel.

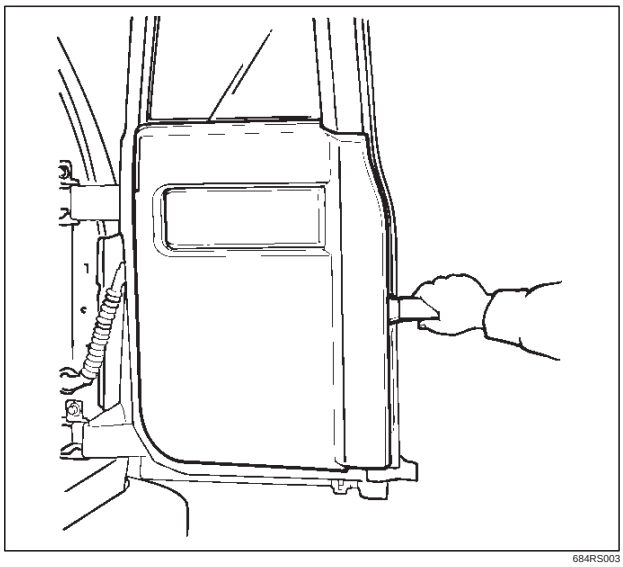

Installation

1. Install the trim panel (RH).
   - Insert the retainer of the trim panel into the tailgate panel and fix it securely.

Downloaded from www.Manualslib.com manuals search engine

Luggage Floor Box

Luggage Floor Box and Associated Parts

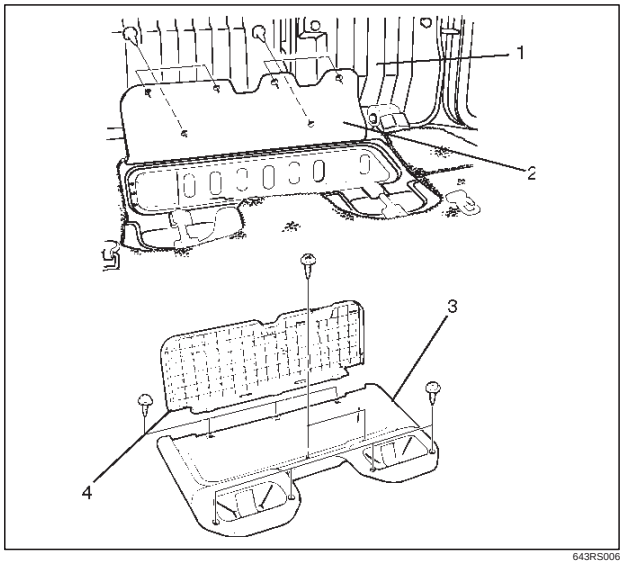

643RS006

Legend

(1) Rear Seat
(2) Floor Carpet
(3) Luggage Floor Box
(4) Luggage Floor Box Cover

Remove

1. Fold the rear seat assembly to the front direction.
2. Remove the luggage floor box cover.
   - Remove the clips which connect the floor carpet and the luggage floor box cover.
3. Remove the luggage floor box.

Installation

To install, follow the removal steps in the reverse order.

Rope Hook Set

Rope Hook Set and Associated Parts

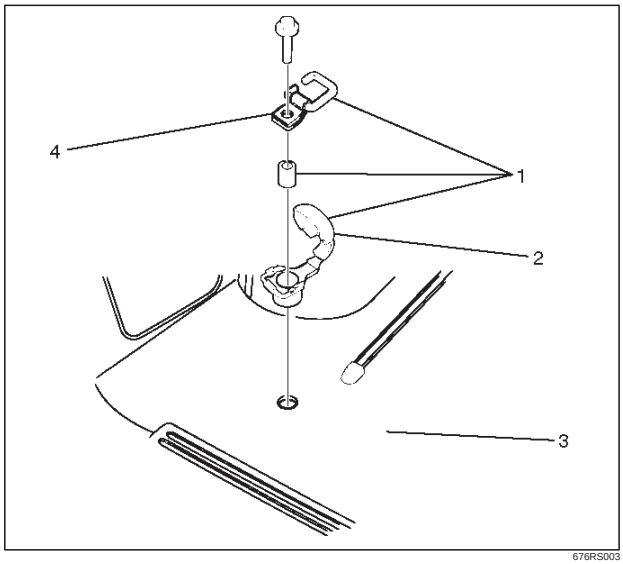

676RS003

Legend

(1) Rope Hook Set
(2) Cover
(3) Luggage Floor Carpet
(4) Hook

Removal

1. Remove the rope hook set.
   - Open the hook cover and hook fixing bolt.

Installation

1. Install the rope hook set.
   - Tighten the hook fixing bolt to the specified torque.

   Torque: 13 N·m (113 lb in)

Downloaded from www.Manualslib.com manuals search engine

Power Door Mirror System

General Description

The circuit consists of the starter switch, door mirror control switch, folding switch, defogger switch and door mirrors on both sides.
The door mirror switch consists of the control switch, folding switch and defogger switch.
When the control switch is operated with the starter switch at either “ACC” or “ON” position, the motors incorporated in the door mirrors on both sides rotates to allow the horizontal and vertical adjustment of mirror angles.
The folding switch can be used to fold the mirror and return it to its original position.
When turning on the door mirror defogger switch with the starter switch at “ON” position, built-in heater in the mirror is activated to perform the defogger function.

Door Mirror Switch Assembly (Control Switch, Folding Switch and Defogger Switch) Removal

1. Disconnect the battery ground cable.
2. Remove the front console assembly(2).
   - Remove four screws.
   - Remove the transmission shift lever knob.
   - Remove the transfer shift lever knob.
   - Disconnect the seat heater switch connectors (if so equipped).
   - Disconnect the door mirror switch connectors.
   - Disconnect the power & winter switch connectors. (A/T only)
3. Remove the door mirror switch assembly(1).
   - Push the lock from the back side of the front console.

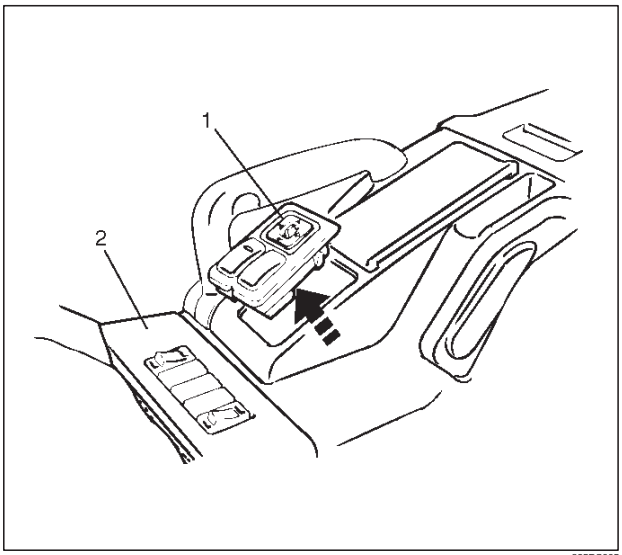

825RS005

Installation

To install, follow the removal steps in the reverse order, noting the following point.

1. Depress the switch with your fingers until it locks securely.

Power Door Mirror

General Description

Mirrors contain two driving motors for the horizontal and vertical movement of the mirror and one motor for folding the mirror.
The movement of the mirror is controlled by the direction of current running through these motors.
The housing portion of the mirror is provided with the auto-stop mechanism which is interlocked with the motor for folding the mirror. When the mirror moves to the stop position (with the mirror folded or returned to its original position), the current to the motor is shut off.
When the mirror cannot operate due to some obstacle and the motor stops its rotation, the resistor prevents current overflow.

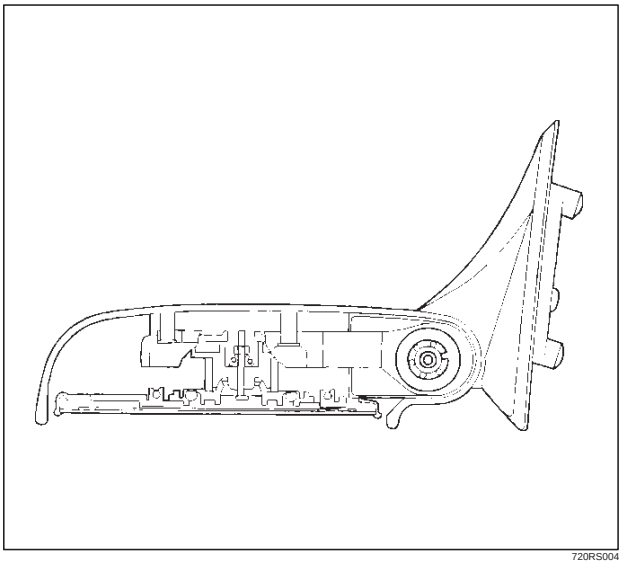
720RS004

Removal and Installation

Refer to the Door Mirror removal and installation steps in this section.

Downloaded from www.Manualslib.com manuals search engine

Power Window System

General Description

The circuit consists of the starter switch, (door lock &) power window switch for each of the front windows, power window switch for rear windows and power window motors.
When the starter switch is turned on, the battery voltage is applied to each of the power window switches through the circuit breaker and the power window relay on the circuit.
The “Down” switch of the driver’s power window switch has a built-in function which can be operated by just touching it.
Accordingly, the window will roll down automatically by just setting the switch to the “AUTO” position.
When the driver’s power lock switch at the driver side is depressed, the power source to the passenger’s power window switches are shut off. So, even if these switches are operated, the power window motor will not operate.

Power Window Switch Removal and Installation

Driver Seat Side

Removal

1. Disconnect the battery ground cable.
2. Remove the switch(1).
   - Pull out the switch by pushing the spring with the tip of a screwdriver.
   - Disconnect two connectors.

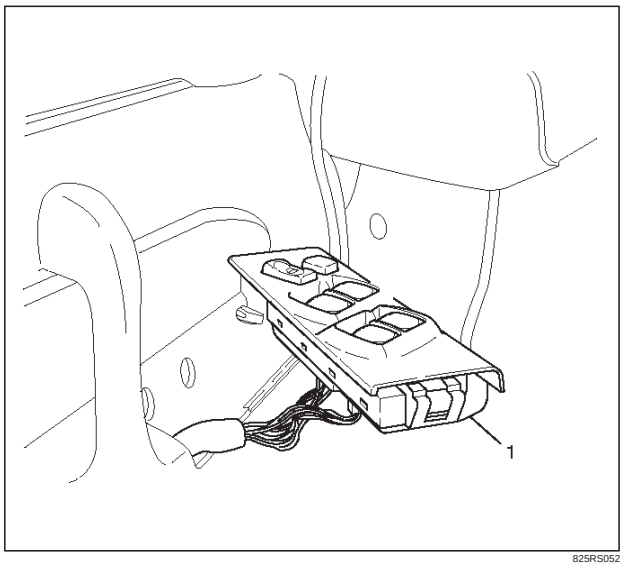

825RS052

Installation

To install, follow the removal steps in the reverse order.

Front Passenger Seat Side

Removal

1. Disconnect the battery ground cable.
2. Remove the switch(1).
   - Pull out the switch by pushing the spring with the tip of a screwdriver.
   - Disconnect the connector.

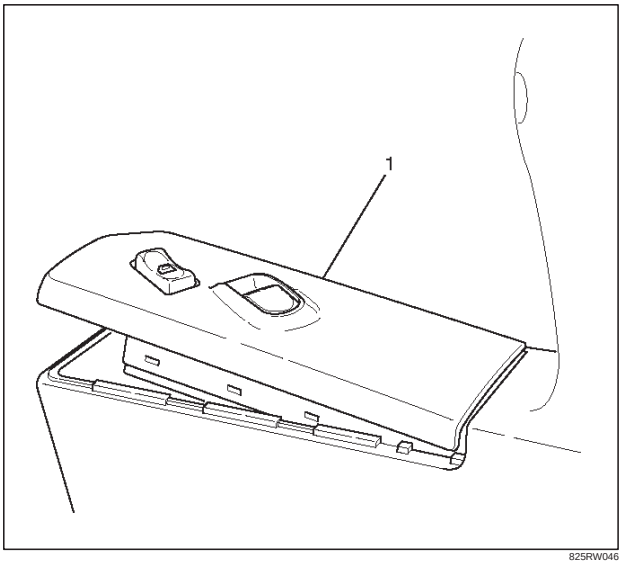

825RW046

Installation

To install, follow the removal steps in the reverse order.

Rear-Left and Right Sides

Removal

1. Disconnect the battery ground cable.
2. Remove the switch(1).
   - Pull out the switch by pushing the spring with the tip of a screwdriver.
   - Disconnect the connector.

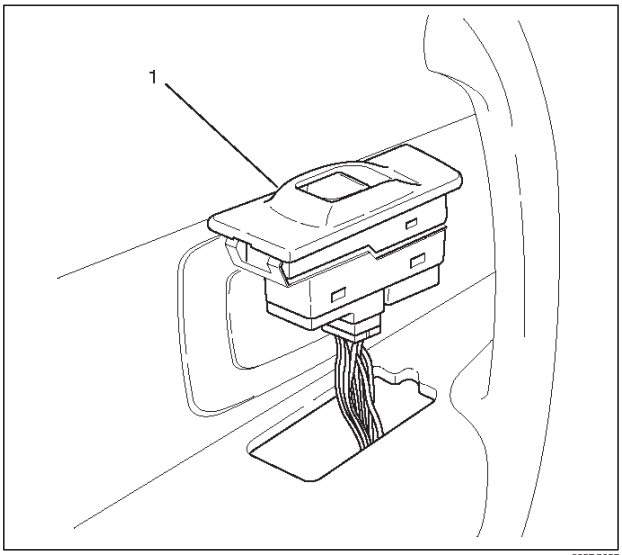

825RS057

Downloaded from www.Manualslib.com manuals search engine

Installation

To install, follow the removal steps in the reverse order.

Power Window Motor Removal and Installation

Driver Seat Side

Removal

1. Disconnect the battery ground cable.
2. Remove the window regulator assembly (1).
   - Refer to Front Window Regulator, Glass and Glass Run in Body Structure section.
3. Remove the power window motor(2).
   - Remove three screws.

CAUTION: When removing the motor from the regulator(1), be careful not to get injured by the strong repellent force of the regulator spring.

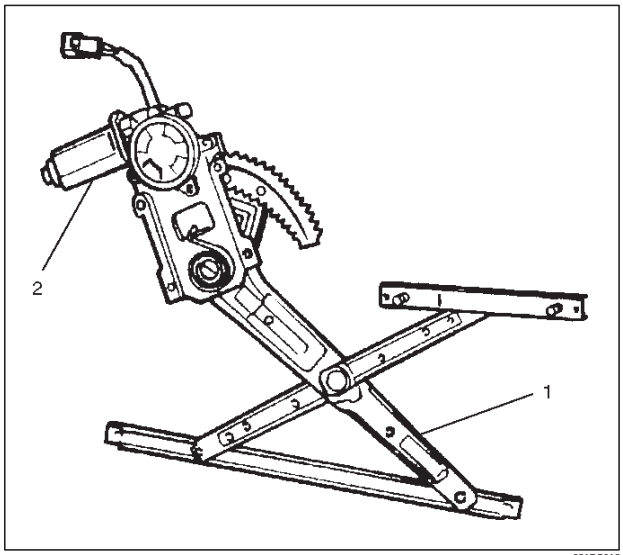

631RS018

Installation

To install, follow the removal steps in the reverse order.

Front Passenger Seat Side

Removal

1. Disconnect the battery ground cable.
2. Remove the window regulator assembly (1).
   - Refer to Front Window Regulator, Glass and Glass Run in Body Structure section.
3. Remove the power window motor(2).
   - Remove three screws.

CAUTION: When removing the motor from the regulator(1), be careful not to get injured by the strong repellent force of the regulator spring.

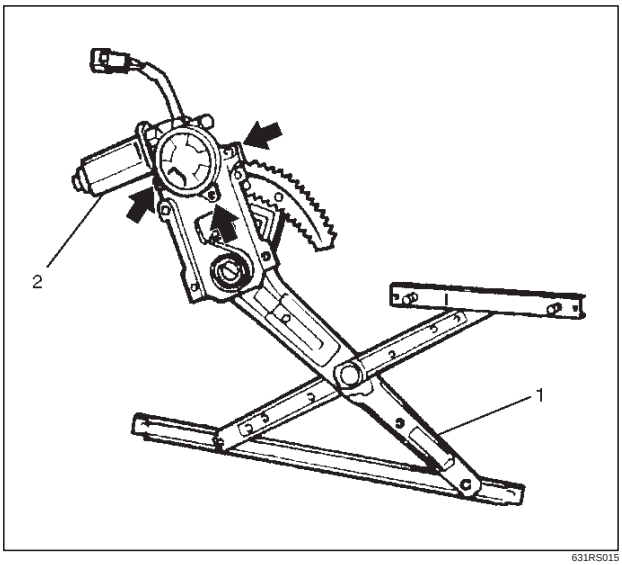

631RS015

Installation

To install, follow the removal steps in the reverse order.

Rear-Left Side

Removal

1. Disconnect the battery ground cable.
2. Remove the rear window regulator assembly.
   - Refer to Rear Window Regulator and Glass in Body Structure section.
3. Remove the power window motor(1).
   - Remove four screws.

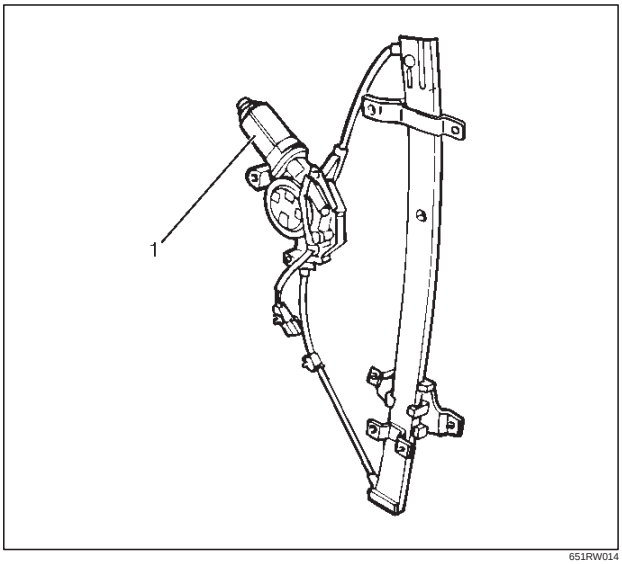

651RW014

Installation

To install, follow the removal steps in the reverse order.

Rear-Right Side

Removal and Installation

Refer to the Rear Power Window Motor-Left Side in this section.

Downloaded from www.Manualslib.com manuals search engine

Main Data and Specifications

Torque Specifications

Application	N·m	Lb Ft	Lb In
Door Mirror Fixing Bolts	8	—	69
Seat Belt Anchor Bolts	39	29	—
Hook Fixing Bolt	13	—	113

Downloaded from www.Manualslib.com manuals search engine

TROOPER

RESTRAINTS

CONTENTS

Seat Belt System 9A–1
Supplemental Restraint System (SRS) 9J–1
Restraint Control System 9J1–1

SEAT BELT SYSTEM

CONTENTS

Service Precaution 9A–1
Seat Belt 9A–2
Front Seat Belt and Associated Parts 9A–2
Removal 9A–2
Inspection 9A–2
Installation 9A–3
Rear Seat Belt and Associated Parts 9A–3
Removal 9A–4
Inspection 9A–4
Installation 9A–4
Front Seat Buckle Assembly 9A–4
Removal 9A–4
Installation 9A–4
Rear Center Seat Belt / Buckle Assembly . . . 9A–5
Rear Center Seat Belt / Buckle Assembly and Associated Parts 9A–5
Removal 9A–5
Installation 9A–5
Rear Seat Lock Assembly 9A–6
Removal 9A–6
Installation 9A–6
Rear Seat Lock Assembly (Bench Type) . . . 9A–6
Removal 9A–6
Installation 9A–6
Rear Seat Strikers 9A–7
Removal 9A–7
Installation 9A–7
Child Seat Tether Anchor Bracket (Child Restraint) 9A–7
General Description 9A–7
Child Seat Tether Anchor Bracket and Associated Parts 9A–7
Installation 9A–7
Main Data and Specifications 9A–8

Service Precaution

WARNING: THIS VEHICLE HAS A SUPPLEMENTAL RESTRAINT SYSTEM (SRS). REFER TO THE SRS COMPONENT AND WIRING LOCATION VIEW IN ORDER TO DETERMINE WHETHER YOU ARE PERFORMING SERVICE ON OR NEAR THE SRS COMPONENTS OR THE SRS WIRING. WHEN YOU ARE PERFORMING SERVICE ON OR NEAR THE SRS COMPONENTS OR THE SRS WIRING, REFER TO THE SRS SERVICE INFORMATION. FAILURE TO FOLLOW WARNINGS COULD RESULT IN POSSIBLE AIR BAG DEPLOYMENT, PERSONAL INJURY, OR OTHERWISE UNNEEDED SRS SYSTEM REPAIRS.

CAUTION: Always use the correct fastener in the proper location. When you replace a fastener, use ONLY the exact part number for that application. ISUZU will call out those fasteners that require a replacement after removal. ISUZU will also call out the fasteners that require thread lockers or thread sealant. UNLESS OTHERWISE SPECIFIED, do not use supplemental coatings (Paints, greases, or other corrosion inhibitors) on threaded fasteners or fastener joint interfaces. Generally, such coatings adversely affect the fastener torque and the joint clamping force, and may damage the fastener. When you install fasteners, use the correct tightening sequence and specifications. Following these instructions can help you avoid damage to parts and systems.

Downloaded from www.Manualslib.com manuals search engine

Seat Belt

Front Seat Belt and Associated Parts

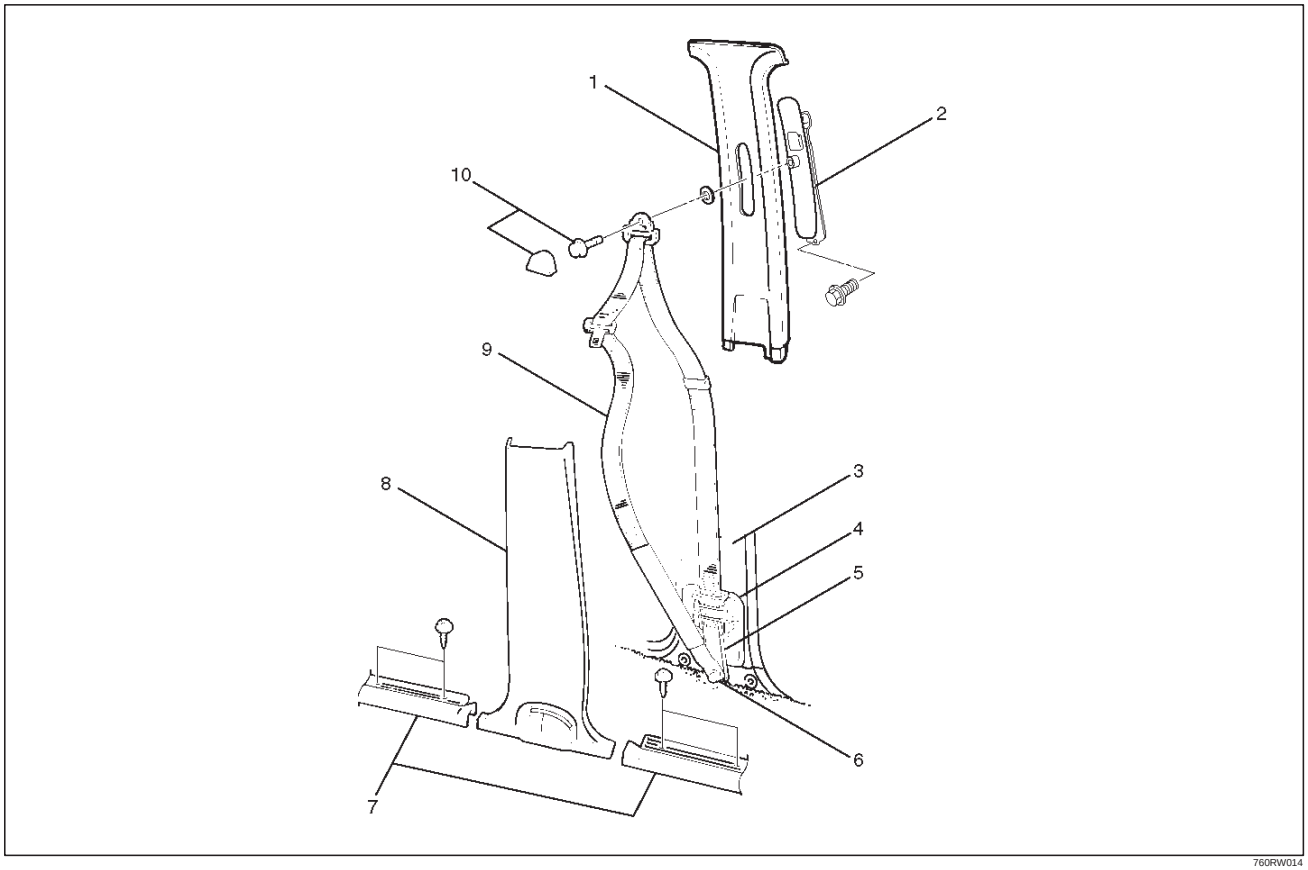

760RW014

Legend

(1) Center Pillar Upper Trim Cover
(2) Adjustable Shoulder Anchor Assembly
(3) Center Pillar
(4) Dust Cover
(5) Retractor
(6) Anchor Bolt (Lower)
(7) Door Sill Plate (Front & Rear)
(8) Center Pillar Lower Trim Cover
(9) Front Seat Belt Assembly
(10) Front Seat Belt Anchor Bolt Cover and Anchor Bolt

Removal

1. Disconnect the battery ground cable.
2. Remove the door sill plate (Front & Rear).
3. Remove the center pillar lower trim cover.
4. Remove the front seat belt anchor bolt cover and anchor bolt (Upper Side).
   - Refer to Center Pillar and Roof Side Trim Cover in Exterior/Interior Trim section.
5. Remove the seat belt lower anchor bolt and screw, and then remove the front seat belt.

Inspection

If any of the following abnormalities is found, replace on an assembly basis:

- Deform and malfunction of adjustable shoulder anchor.
- No smooth move of upper/lower anchors in the circumferential direction.
- Damaged and/or deformed through ring.
- Damaged and/or deformed tongue.
- Damaged and/or frayed of webbing.
- Deformed retractor bracket.
- Seat belt not rewound up.
- Resistance or abnormal sound when seat belt is wound out and rewound.
- Retractor abnormality.

Downloaded from www.Manualslib.com manuals search engine

Inspection of retractor

1. ELR (Emergency Locking Retractor) lock inclining angle check.
   - When the retractor is moved gently from its installing position, make sure it is not locked within 15° in any directions, and it remains locked at 45° or larger.
2. ELR lock check.
   - When the seat belt is drawn slowly with the retractor installed, make sure it is not locked. And when it is drawn quickly, make sure it is locked.
3. ALR (Automatic Locking Retractor)/ELR check (Except for driver's seat).
   - When rewound after winding out the seat belt, make sure the seat belt cannot be taken out. After rewinding, make sure it has returned to its normal operation.

CAUTION: Do not disassemble the retractor.

Installation

To install, follow the removal steps in the reverse order, noting the following points;

CAUTION: The front seat belt for '99model is differently specified from that for '98model.
When replacing, be sure to replace with the one for '99model after making sure of part No..

1. Pass the seat belt through the lower trim cover hole, and tighten the seat belt anchor bolts to the specified torque.

   Torque: 39 N·m (29 lb ft)

2. After installing the trim cover to the body panel securely, close the lower trim cover.

Rear Seat Belt and Associated Parts

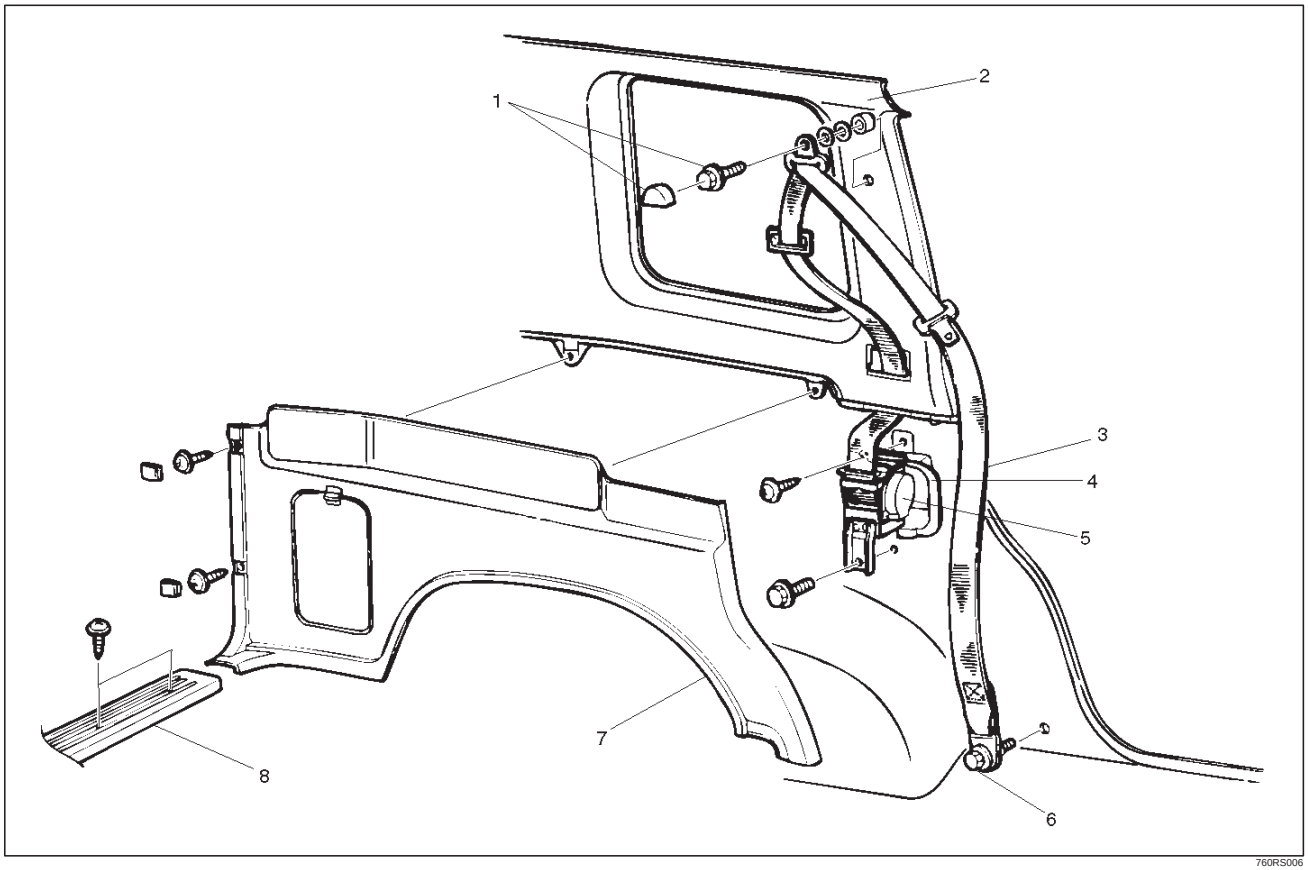

760RS006

Legend

(1) Rear Seat Belt Anchor Bolt Cover and Anchor Bolt (Upper Side)
(2) Quarter Upper Trim Cover
(3) Rear Seat Belt Assembly
(4) Dust Cover
(5) Retractor
(6) Anchor Bolt (Lower Side)
(7) Luggage Side Trim Cover
(8) Rear End Floor Trim Cover

Downloaded from www.Manualslib.com manuals search engine

Removal

1. Disconnect the battery ground cable.
2. Remove the rear end floor trim cover.
3. Remove the luggage side trim cover.
   - Refer to Luggage Side and Quarter Upper Trim Cover in Exterior/Interior Trim section.
4. Remove the rear seat belt anchor bolt cover and anchor bolt (Upper Side).
5. Remove the seat belt lower anchor bolt and remove the retractor from dust cover slit to remove the rear seat belt.

Inspection

If any of the following abnormalities is found, replace on an assembly basis:

- No smooth move of upper/lower anchors in the circumferential direction.
- Damaged and/or deformed through ring.
- Damaged and/or deformed tongue.
- Damaged and/or frayed of webbing.
- Deformed retractor bracket.
- Seat belt not rewound up.
- Resistance or abnormal sound when seat belt is wound out and rewound.
- Retractor abnormality.

Inspection of retractor

1. ELR (Emergency Locking Retractor) lock inclining angle check.
   - When the retractor is moved gently from its installing position, make sure it is not locked within 15° in any directions, and it remains locked at 45° or larger.
2. ELR lock check.
   - When the seat belt is drawn slowly with the retractor installed, make sure it is not locked. And when it is drawn quickly, make sure it is locked.
3. ALR (Automatic Locking Retractor)/ELR check (Except for driver's seat).
   - When rewound after winding out the seat belt, make sure the seat belt cannot be taken out. After rewinding, make sure it has returned to its normal operation.

CAUTION: Do not disassemble the retractor.

Installation

To install, follow the removal steps in the reverse order, noting the following point.

1. Tighten the seat belt anchor bolts to the specified torque.

   Torque: 39 N·m (29 lb ft)

Front Seat Buckle Assembly

Removal

1. Disconnect the battery ground cable.
2. Disconnect the seat belt warning connector (driver's side) (3) and remove a clip(2).
3. Remove the front seat buckle assembly(1).

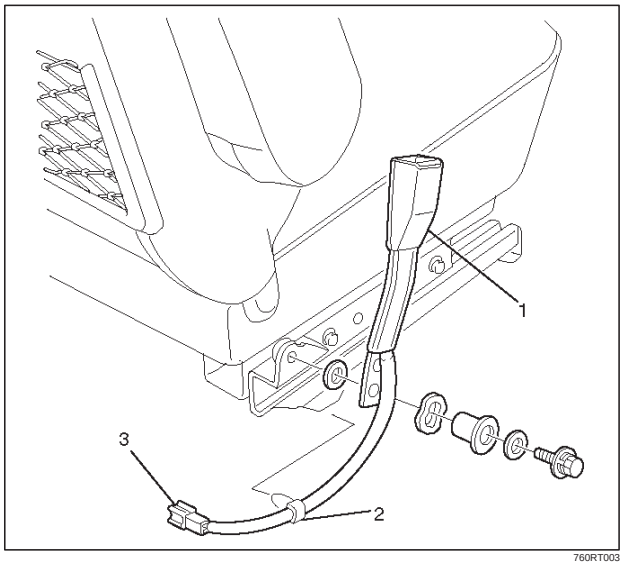

760RT003

Installation

To install, follow the removal steps in the reverse order, noting the following points.

1. Fix the buckle to the rotation-stop position(2) securely to install the front seat buckle assembly(1).

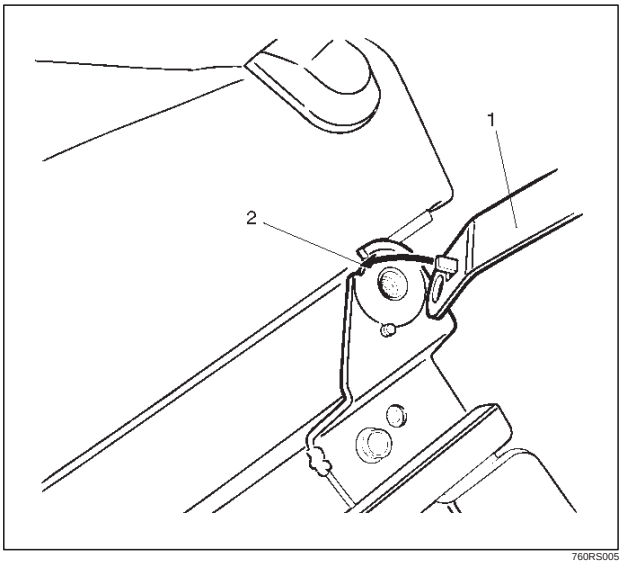

760RS005

2. Tighten the buckle anchor bolt to the specified torque.

   Torque: 39 N·m (29 lb ft)

Downloaded from www.Manualslib.com manuals search engine

Rear Center Seat Belt / Buckle Assembly

Rear Center Seat Belt / Buckle Assembly and Associated Parts

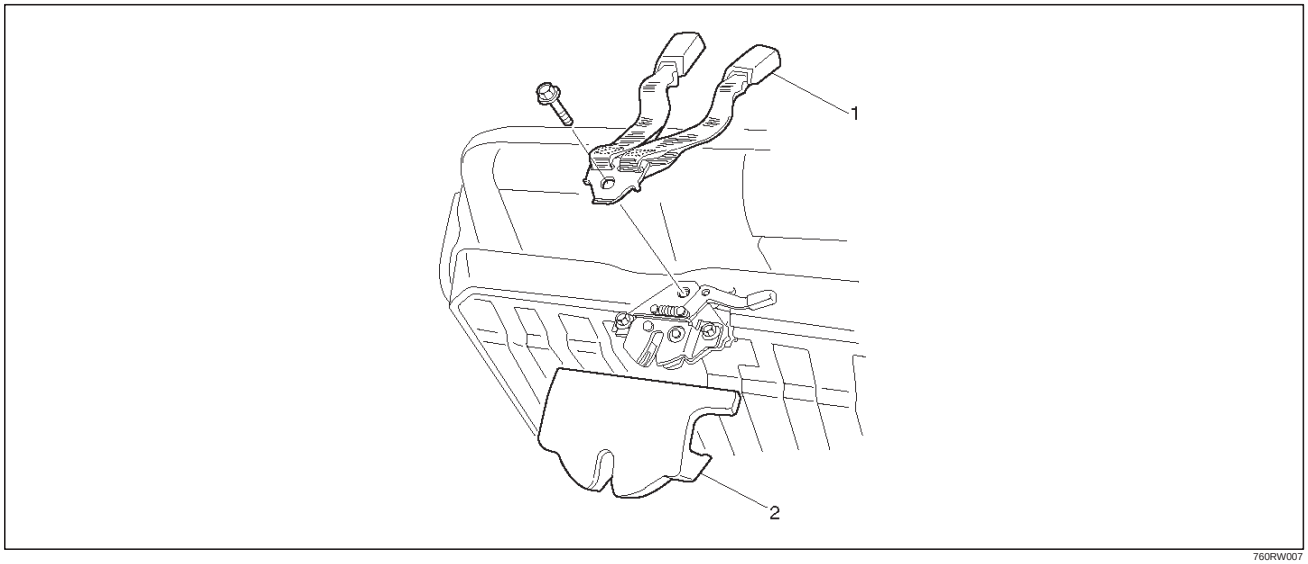

760RW007

Legend

(1) Rear Seat Belt Buckle Assembly
(2) Seat Lock Cover

Removal

1. Remove the catch portions(2) & (3) of the seat lock assembly(4) from the cover, and then remove the seat lock cover(1).

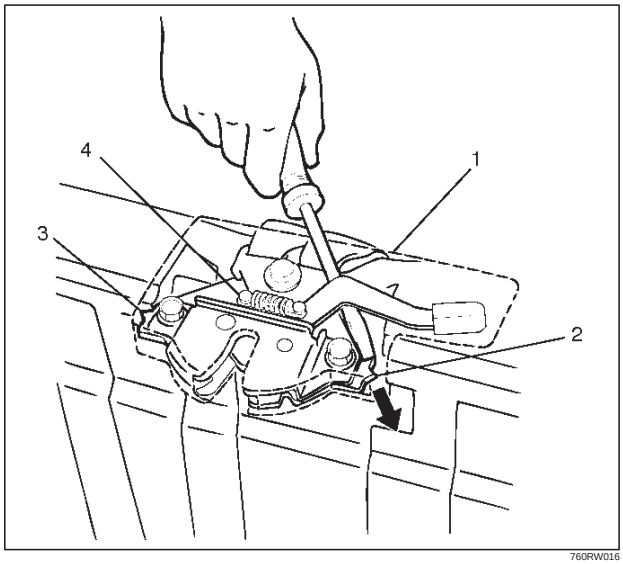

760RW016

2. Remove the rear seat buckle assembly.

Installation

1. Fix the rear seat buckle assembly(1) to the rotation stopper and tighten the anchor bolt to the specified torque.

Torque: 39 N·m (29 lb ft)

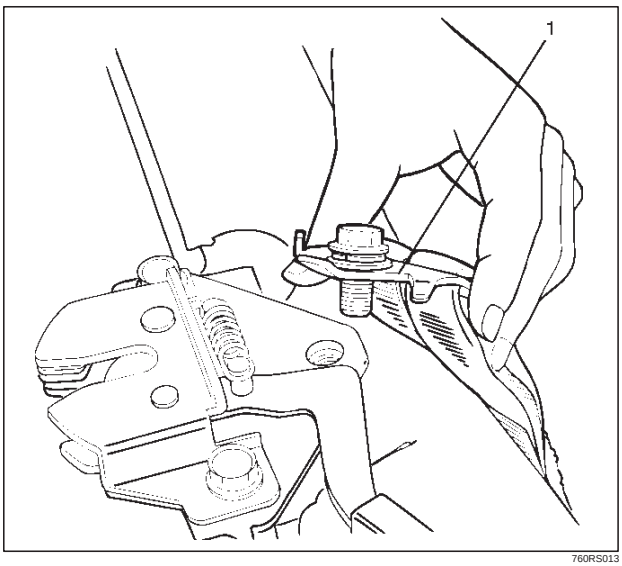

760RS013

2. Install the seat lock cover.

Downloaded from www.Manualslib.com manuals search engine

Rear Seat Lock Assembly

Removal

1. Remove the seat lock cover(3).
2. Remove the rear seat belt buckle assembly(1).
3. Remove the rear seat lock assembly(2).

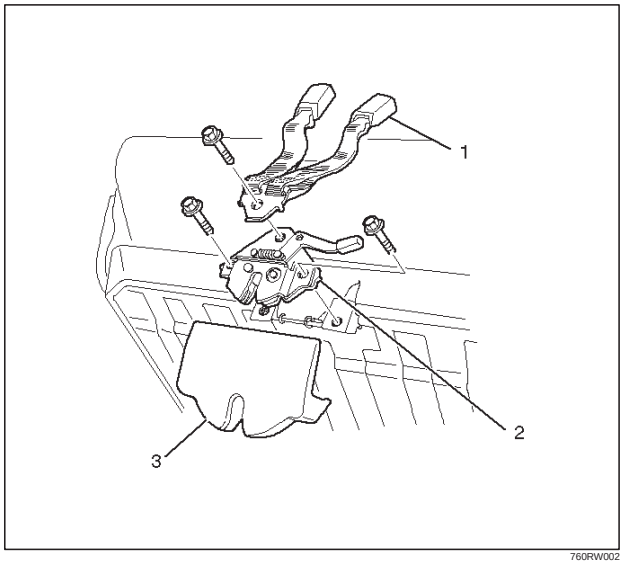

760RW002

Installation

To install, follow the removal steps in the reverse order, noting the following point.

1. Tighten the seat lock fixing bolts to the specified torque.

   Torque:42 N·m (31 lb ft)

Rear Seat Lock Assembly (Bench Type)

Removal

1. Remove the seat lock cover(3).
2. Remove the rear seat belt/buckle assembly(1).
3. Disconnect the link connecting the lock assemblies on the both sides, and then remove the rear seat lock assembly(2).

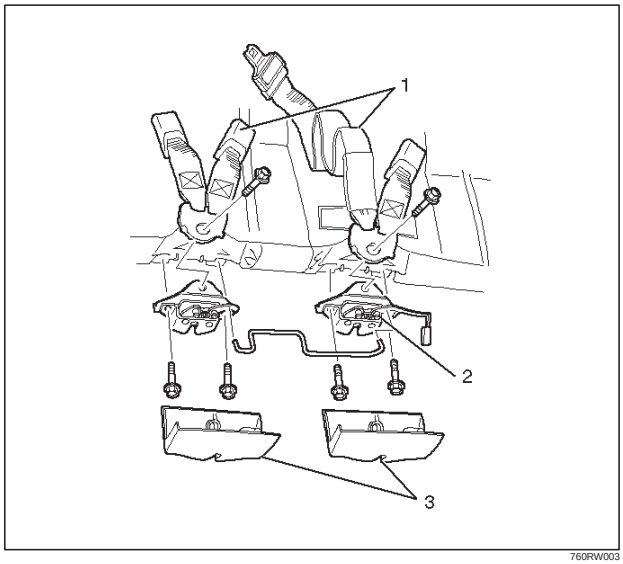

760RW003

Installation

To install, follow the removal steps in the reverse order, noting the following point.

1. Tighten the seat lock fixing bolts to the specified torque.

   Torque: 42 N·m (31 lb ft)

Downloaded from www.Manualslib.com manuals search engine

Rear Seat Strikers

Removal

1. Fold the rear seat assembly to the front direction.
2. Remove the luggage floor box(1).
3. Remove the rear seat striker(2).

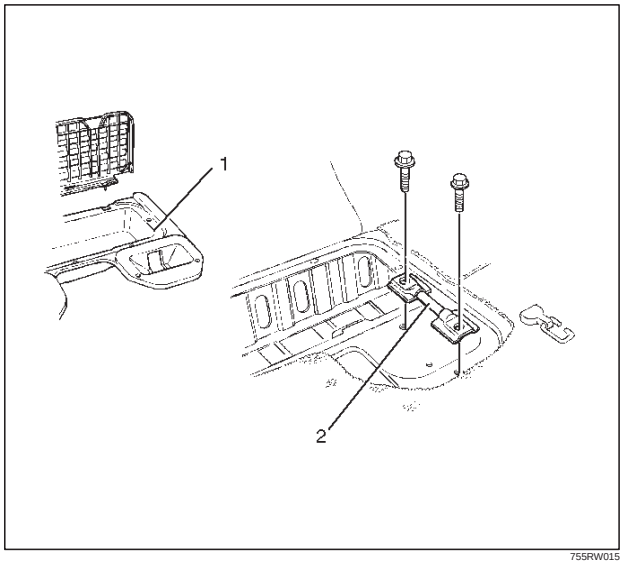

755RW015

Installation

To install, follow the removal steps in the reverse order, noting the following point.

1. Tighten the striker fixing bolts to the specified torque.

   Torque: 40 N·m (30 lb ft)

Child Seat Tether Anchor Bracket (Child Restraint)

General Description

Plastic plug is provided at three places on the luggage floor panel. Remove the center plug from the floor panel. Install the bracket to the hole where the plug is removed. Alternatively, the bracket may be installed in the right-hand or left-hand plug hole.

Child Seat Tether Anchor Bracket and Associated Parts

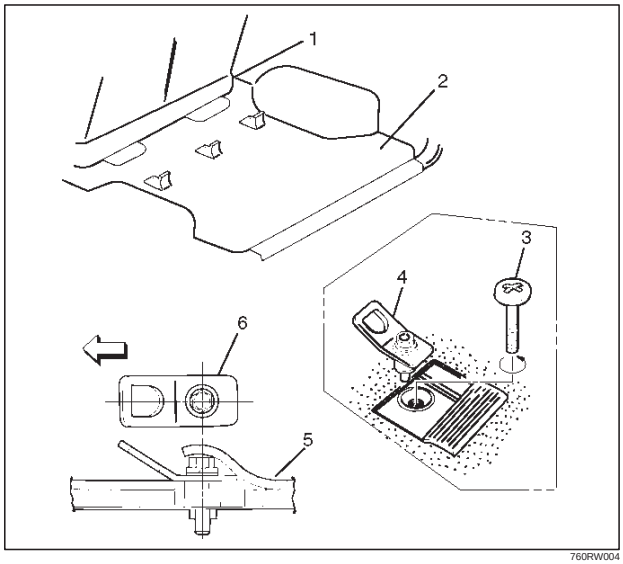

760RW004

Legend

(1) Rear Seat
(2) Luggage Floor
(3) Plug
(4) Child Seat Tether Anchor Bracket
(5) Floor Carpet
(6) Child Seat Tether Anchor Bracket

Installation

1. Turn the plug counterclockwise to remove it.
2. Install the bracket such that its tether belt hook hole is facing toward the front of the vehicle.
3. Tighten the fixing bolt to the specified torque.

   Torque: 20 N·m (14 lb ft)

Downloaded from www.Manualslib.com manuals search engine

Main Data and Specifications

Torque Specifications

Application	N·m	Lb Ft	Lb In
Front Seat Belt Anchor Bolts	39	29	—
Rear Seat Belt Anchor Bolts	39	29	—
Front Seat Buckle Anchor Bolt	39	29	—
Rear Seat Buckle Anchor Bolt	39	29	—
Rear Seat Lock Fixing Bolts	42	31	—
Rear Seat Striker Fixing Bolts	40	30	—
Child Seat Tether Anchor Bolt	20	14	—

Downloaded from www.Manualslib.com manuals search engine

TROOPER

RESTRAINTS

SUPPLEMENTAL RESTRAINT SYSTEM (SRS)

CONTENTS

Service Precaution 9J–1
General Description 9J–2
SRS Component And Wiring Location View . 9J–4
Component Description 9J–4
Definitions 9J–7
Diagnosis 9J–8
SRS Connector Body Face Views 9J–9
Repairs And Inspections Required After An Accident 9J–9
On–Vehicle Service 9J–10
Air Bag Assembly Handling / Shipping / Scrapping 9J–11
Special Tools 9J–20
Service Precautions for SRS Component Service 9J–24
SRS Connectors 9J–25
Sensing And Diagnostic Module (SDM) 9J–27
Service Precautions 9J–27
Removal 9J–27
Installation 9J–27
Driver Air Bag Assembly 9J–29
Service Precautions 9J–29
Removal 9J–29
Installation 9J–30
Steering Wheel 9J–31
Service Precautions 9J–31
Removal 9J–31
Installation 9J–32
SRS Coil Assembly 9J–34
Service Precautions 9J–34
Removal 9J–34
Installation 9J–35
Steering Column 9J–37
Service Precautions 9J–37
Removal 9J–37
Installation 9J–39
Passenger Air Bag Assembly 9J–41
Service Precautions 9J–41
Removal 9J–41
Installation 9J–42
Main Data and Specifications 9J–42

Service Precaution

WARNING: THIS VEHICLE HAS A SUPPLEMENTAL RESTRAINT SYSTEM (SRS). REFER TO THE SRS COMPONENT AND WIRING LOCATION VIEW IN ORDER TO DETERMINE WHETHER YOU ARE PERFORMING SERVICE ON OR NEAR THE SRS COMPONENTS OR THE SRS WIRING. WHEN YOU ARE PERFORMING SERVICE ON OR NEAR THE SRS COMPONENTS OR THE SRS WIRING, REFER TO THE SRS SERVICE INFORMATION. FAILURE TO FOLLOW WARNINGS COULD RESULT IN POSSIBLE AIR BAG DEPLOYMENT, PERSONAL INJURY, OR OTHERWISE UNNEEDED SRS SYSTEM REPAIRS.

CAUTION: Always use the correct fastener in the proper location. When you replace a fastener, use ONLY the exact part number for that application. ISUZU will call out those fasteners that require a replacement after removal. ISUZU will also call out the fasteners that require thread lockers or thread sealant. UNLESS OTHERWISE SPECIFIED, do not use supplemental coatings (Paints, greases, or other corrosion inhibitors) on threaded fasteners or fastener joint interfaces. Generally, such coatings adversely affect the fastener torque and the joint clamping force, and may damage the fastener. When you install fasteners, use the correct tightening sequence and specifications. Following these instructions can help you avoid damage to parts and systems.

Downloaded from www.Manualslib.com manuals search engine

General Description

CAUTION: When fasteners are removed, always reinstall them at the same location from which they were removed. If a fastener needs to be replaced, use the correct part number fastener for that application. If the correct part number fastener is not available, a fastener of equal size and strength (or stronger) may be used. Fasteners that are not reused, and those requiring thread locking compound will be called out. The correct torque value must be used when installing fasteners that require it. If the above conditions are not followed, parts or system damage could result.

Restraint Devices

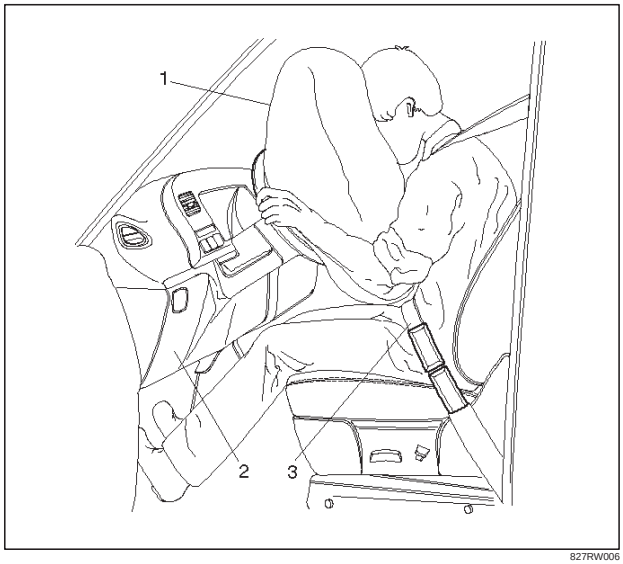

827RW006

Legend

(1) Deployed Air Bag
(2) Knee Bolster
(3) Seat Belt

The Supplemental Restraint System (SRS) helps supplement the protection offered by the driver and front passenger seat belts by deploying an air bag from the center of the steering wheel and from the top of the right side of the instrument panel.

The air bag deploys when the vehicle is involved in a frontal crash of sufficient force up to 30 degrees off the centerline of the vehicle. To further absorb the crash energy there is a knee bolster located beneath the instrument panel for both the driver and passenger, and the steering column is collapsible.

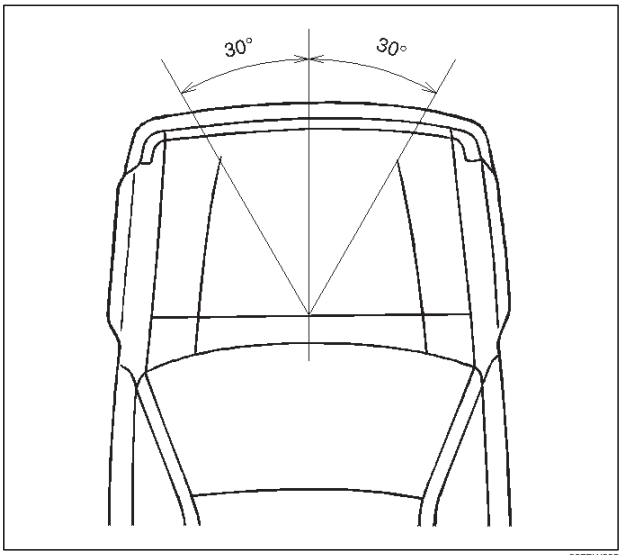

827RW005

Downloaded from www.Manualslib.com manuals search engine

System Description

The SRS consists of the Sensing and Diagnostic Module (SDM), the driver air bag assembly, the SRS coil assembly, the passenger air bag assembly and the “AIR BAG” warning lamp in the instrument cluster. The SDM, SRS coil assembly (driver side only), driver air bag assembly, passenger air bag assembly and connector wire make up the deployment loops. The function of the deployment loops is to supply current through air bag assembly, which will cause deployment of the air bags in the event of a frontal crash of sufficient force, up to 30 degrees off the centerline of the vehicle. The air bag assemblies are only supplied enough current to deploy when the SDM detects vehicle velocity changes severe enough to warrant deployment.

The SDM contains a sensing device which converts vehicle velocity change to an electrical signal. The electrical signal generated is processed by the SDM and then compared to a value stored in memory. When the generated signal exceeds the stored value, the SDM will cause current to flow through the air bag assembly deploying the air bags.

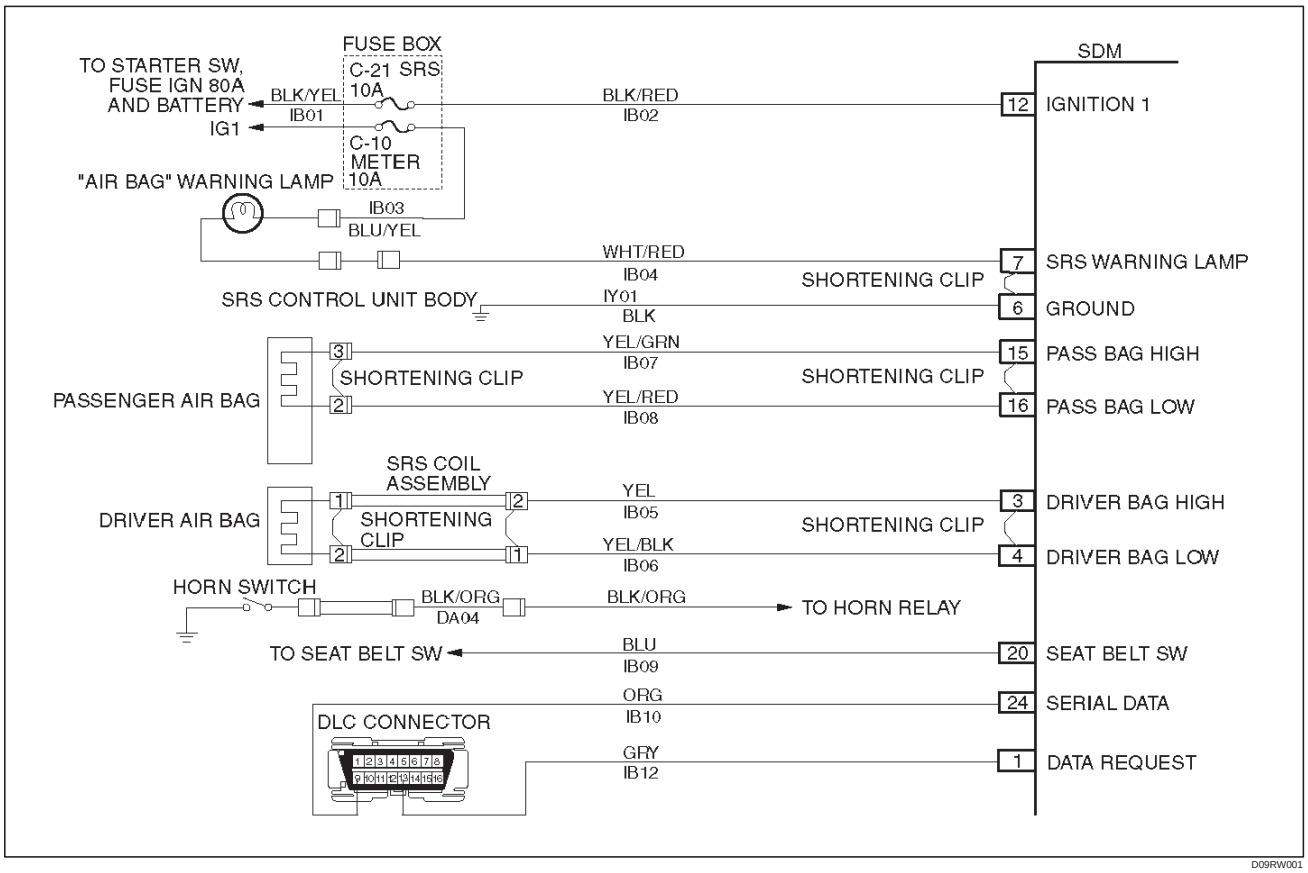

Downloaded from www.Manualslib.com manuals search engine

SRS Component And Wiring Location View

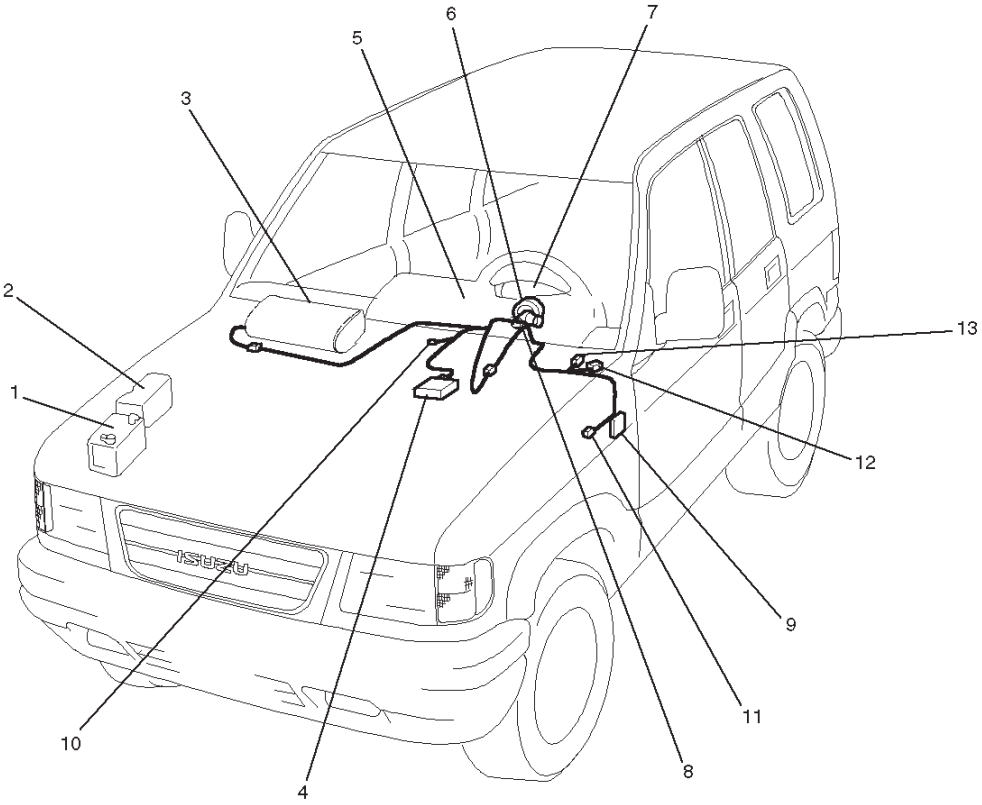

810RW001

Legend

(1) Battery
(2) Relay & Fuse Box
(3) Passenger Air Bag Assembly
(4) SDM
(5) Meter Assembly
(6) SRS Coil Assembly
(7) Driver Air Bag Assembly
(8) Starter Switch
(9) Fuse Box, C–21
(10) SRS Body Earth
(11) Body Harness Connector
(12) Instrument Harness Connector
(13) Engine Haness Connector

Component Description

SDM (Sensing and Diagnostic Module)

WARNING: DURING SERVICE PROCEDURES, BE VERY CAREFUL WHEN HANDLING A SENSING AND DIAGNOSTIC MODULE (SDM). NEVER STRIKE OR JAR THE SDM. NEVER POWER UP THE SRS WHEN THE SDM IS NOT RIGIDLY ATTACHED TO THE VEHICLE. ALL SDM AND MOUNTING BRACKET FASTENERS MUST BE CAREFULLY TORQUED AND THE ARROW MUST BE POINTED TOWARD THE FRONT OF THE VEHICLE TO ENSURE PROPER OPERATION OF THE SRS. THE SDM COULD BE ACTIVATED WHEN POWERED WHILE NOT RIGIDLY ATTACHED TO THE VEHICLE WHICH COULD CAUSE DEPLOYMENT AND RESULT IN PERSONAL INJURY.

The Sensing and Diagnostic Module (SDM) is designed to perform the following functions in the SRS:

Downloaded from www.Manualslib.com manuals search engine

1. Energy Reserve — The SDM maintains 24–Volt Loop Reserve (24VLR) energy supply to provide deployment energy when ignition voltage is lost in a frontal crash.
2. Frontal Crash Detection — The SDM monitors vehicle velocity changes to detect frontal crashes which are severe enough to warrant deployment.
3. Air Bag Deployment — When a frontal crash of sufficient force is detected, the SDM will cause enough current to flow through the air bag assembly to deploy the air bag.
4. Malfunction Detection — The SDM performs diagnostic monitoring of SRS electrical components and sets a diagnostic trouble code when a malfunction is detected.
5. Frontal Crash Recording — The SDM records information regarding SRS status during frontal crash.
6. Malfunction Diagnosis — The SDM displays SRS diagnostic trouble codes and system status information through the use of a scan tool.
7. Driver Notification — The SDM warns the vehicle driver of SRS malfunctions by controlling the “Air Bag” warning lamp.

The SDM is connected to the SRS wiring harness by a 24–pin connector. This harness connector uses a shorting clip across certain terminals in the contact area. This shorting clip connects the “AIR BAG” warning lamp to ground when the SDM harness connector is disconnected or CPA (Connector Position Assurance) is not inserted even if completely connected. This will cause the “AIR BAG” warning lamp to come “ON” steady whenever the ignition switch is at the ON or START positions with the SDM disconnected.

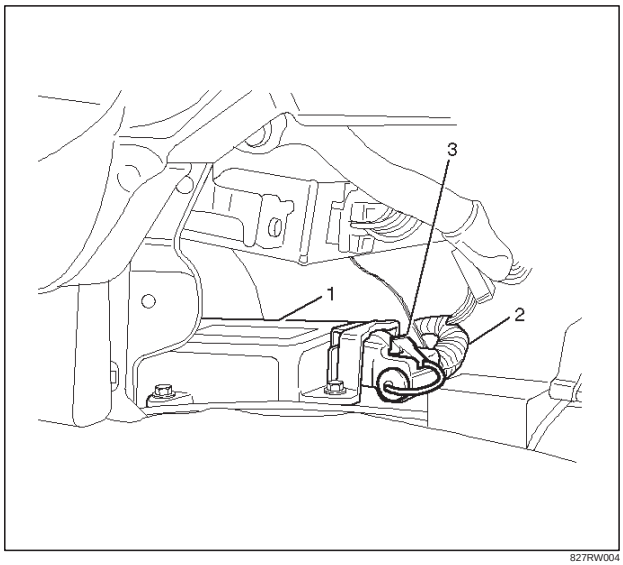

827RW004

Legend

(1) SDM
(2) SRS Harness
(3) Connector Position Assurance

“Air Bag” Warning Lamp

Ignition voltage is applied to the “AIR BAG” warning lamp when the ignition switch is at the ON or START positions. The SDM controls the lamp by providing ground with a lamp driver. The “AIR BAG” warning lamp is used in the SRS to do the following:

1. Verify lamp and SDM operation by flashing SEVEN (7) times when the ignition switch is first turned “ON”.
2. Warn the vehicle driver of SRS electrical system malfunctions which could potentially affect the operation of the SRS. These malfunctions could result in nondeployment in case of a frontal crash or deployment for conditions less severe than intended.

The “AIR BAG ” warning lamp is the key to driver notification of SRS malfunctions. For proper lamp operation, refer to the “SRS Diagnostic System Check” in this section.

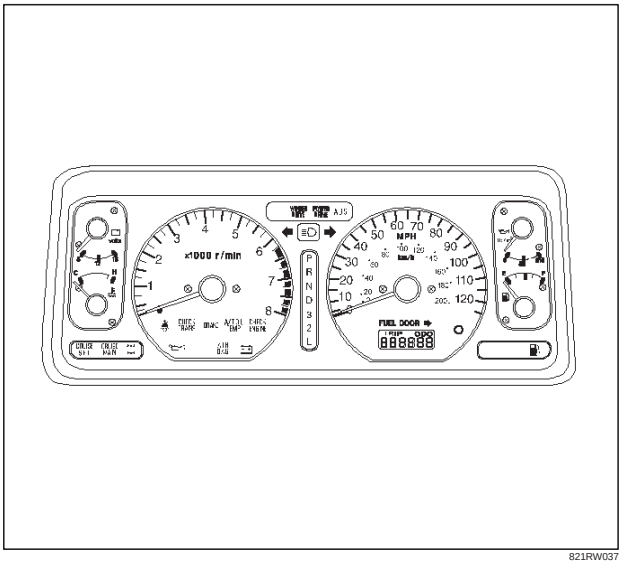

821RW037

SRS Coil Assembly

The SRS coil assembly consists of two current carrying coils. This is attached to the steering column and allow rotation of the steering wheel while maintaining continuous contact of the driver deployment loop to the driver air bag assembly.

There is a shorting clip on the yellow 2–pin connector near the base of steering column which connects the SRS coil to the SRS wiring harness.

The shorting clip shorts to the SRS coil and driver air bag assembly when the yellow 2–pin connector is disconnected. The circuit to the driver air bag assembly is shorted in this way to help prevent unwanted deployment of the air bag when servicing the steering column or other SRS components.

Downloaded from www.Manualslib.com manuals search engine

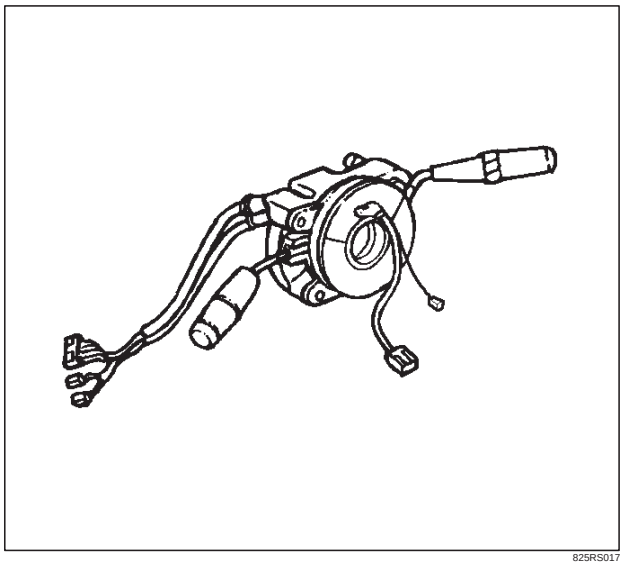

825RS017

Air Bag Assemblies

The air bag assembly consist of an inflatable air bag assembly and an inflator (a canister of gas–generating material and an initiating device). When the vehicle is in a frontal crash of sufficient force.

The SDM causes current flow through the deployment loops. Current passing through the inflator ignites the material in the air bag assembly. The gas produced from this reaction rapidly inflates the air bag assembly.

There is a shorting clip on the driver air bag assembly connector which connects the SRS coil assembly. The shorting clip shorts across the driver air bag assembly circuits when driver air bag assembly connector is disconnected.

The circuit to the driver air bag assembly is shorted in this way to help prevent unwanted deployment of the air bag when servicing the driver air bag assembly, the steering column or other SRS components.

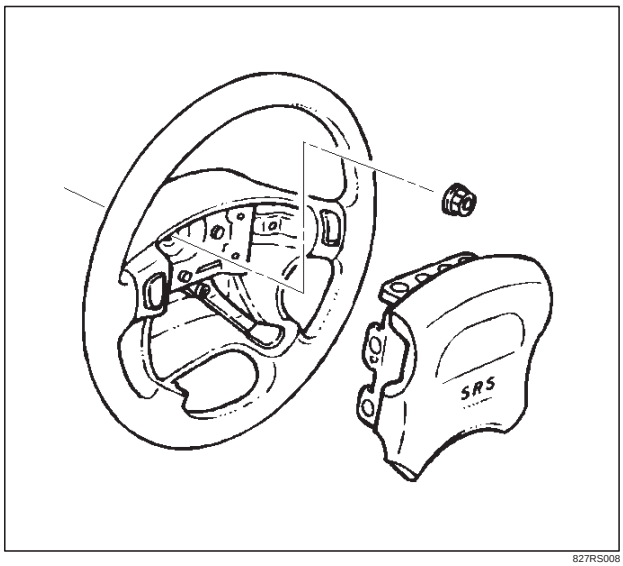

827RS008

There is a shorting clip on the passenger air bag assembly connector which connects to the SRS harness. The shorting clip shorts across the passenger air bag assembly circuit when the passenger air bag assembly connector is disconnected. The circuit to the passenger air bag assembly is shorted in this way to help prevent unwanted deployment of the air bag when servicing the passenger air bag assembly, the instrument panel or other SRS components.

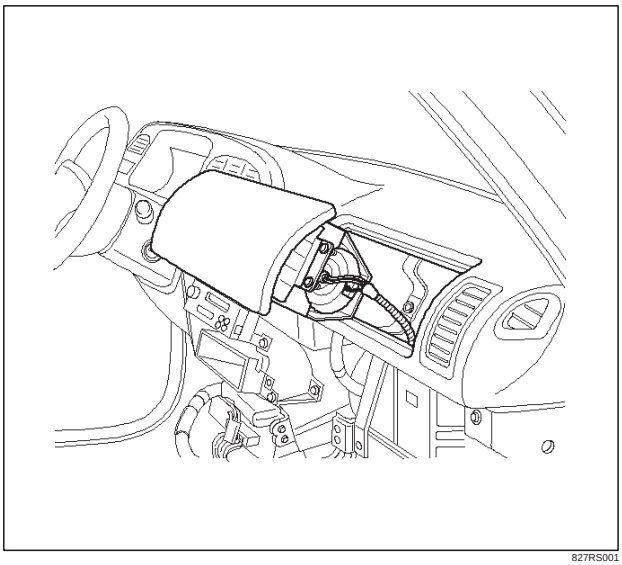

827RS001

Steering Column

The steering column absorbs energy and is designed to compress in a frontal crash to decrease the chance of injury to the driver.

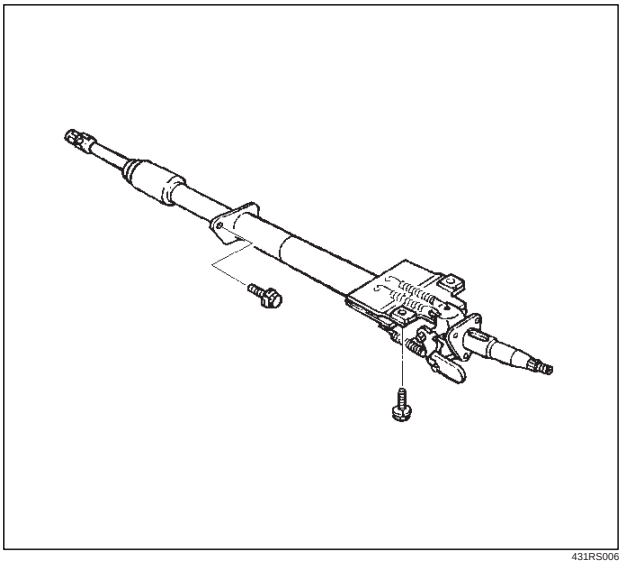

431RS006

Knee Bolster

The knee bolsters are used to absorb energy to protect knees and control the forward movement of the vehicle's

Downloaded from www.Manualslib.com manuals search engine

front seat occupants during a frontal crash, by limiting leg movement.

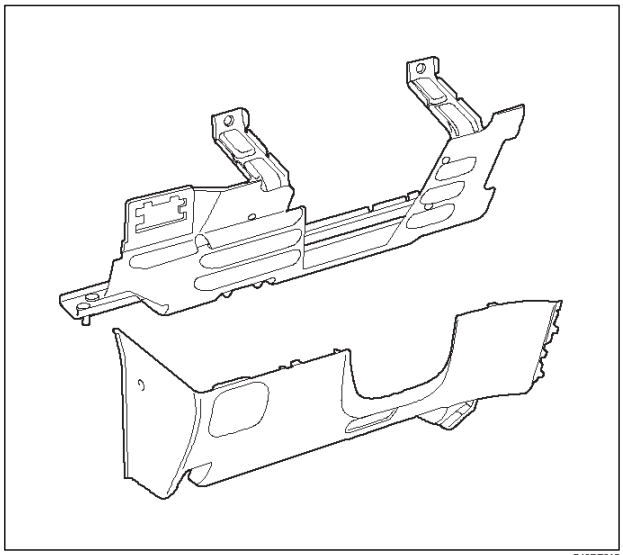

740RT015

Definitions

Air Bag
An inflatable cloth cushion designed to deploy in certain frontal crashes. It supplements the protection offered by the seat belts by distributing the impact load more evenly over the vehicle occupant's head and torso.

Asynchronous
Performed in a nonperiodic fashion, (i.e., no defined time or interval).

B+
Battery voltage, (B+) The voltage available at the battery at the time of the indicated measurement. With the key "ON" and the engine not running, the system voltage will likely be between 12 and 12.5 volts. At idle, the voltage may be 14 to 16 volts. The voltage could be as low as 10 volts during engine cranking.

Bulb Check
The SDM will cause the "AIR BAG" warning lamp to flash seven times and then go "OFF" whenever the ignition switch transitions to the ON position from any other ignition switch position and no malfunctions are detected.

"Continuous Monitoring"
Tests performed by the SDM on the SRS every 100 milliseconds while "Ignition 1" voltage is in the normal operating voltage range at the SDM.

Data Link Connector (DLC)
Formerly "DLC" a connector which allows communication with an external computer, such as a scan tool.

Datum Line
A base line parallel to the plane of the underbody or frame from which all vertical measurements originate.

Deploy
To inflate the air bag.

Deployment Loops
The circuits which supply current to the air bag assemblies to deploy the air bag.

Diagnostic Trouble Code (DTC)
Formerly "Code", a numerical designator used by the SDM to indicate specific SRS malfunctions.

Driver Current Source
An output of the SDM which applies current into the driver air bag assembly circuit during the "Initiator Assembly Resistance Test".

Driver Air Bag Assembly
An assembly located in the steering wheel hub consisting of an inflatable bag, an inflator and an initiator.

EEPROM
Electrically Erasable Programmable Read Only Memory. Memory which retains its contents when power is removed from the SDM.

Ignition Cycle
The voltage at the SDM "Ignition 1" inputs, with ignition switch "ON", is within the normal operating voltage range for at least ten seconds before turning ignition switch "OFF".

Ignition 1
A battery voltage (B+) circuit which is only powered with the ignition switch in the ON, or START positions.

Initiator
The electrical component inside the air bag assembly which, when sufficient current flows, sets off the chemical reaction that inflates the air bag.

"Initiator Assembly Resistance Test"
Tests performed once each ignition cycle when no malfunctions are detected during "Turn–ON" or "Continuous Monitoring". This test checks for the correct SDM configuration for the vehicle, shorts to "Ignition 1" in the deployment loops, high resistance or opens in the "Driver Side High", "Driver Side Low", "Passenger Side High" and "Passenger Side Low" circuits and measures the resistance of the inflator assembly consisting of 1) Initiators, 2) SRS coil assembly (driver side only), 3) Connectors and associated wiring.

Normal Operating Voltage Range
The voltage measured between the SDM "Ignition 1" terminals and "Ground" terminals is between 9 and 16 volts.

Passenger Current Source
An output of the SDM which applies current into the passenger air bag assembly circuit during the "Initiator Assembly Resistance Test".

Passenger Air Bag Assembly
An assembly located in the right side of the instrument panel consisting of an inflatable bag, an inflator and an initiator.

Scan Tool
An external computer used to read diagnostic information from on–board computers via the data link connector.

Downloaded from www.Manualslib.com manuals search engine

SDM
Sensing and Diagnostic Module which provides reserve energy to the deployment loops, deploys the air bags when required and performs diagnostic monitoring of all SRS components.

Serial Data
Information representing the status of the SRS.

SRS
Supplemental Restraint System.

SRS Coil Assembly
An assembly of two current–carrying coils in the driver deployment loop that allows the rotation of the steering wheel while maintaining the continuous contact of the driver deployment loop to the driver air bag assembly.

SRS Wiring Harness
The wires and connectors that electrically connect the components in the SRS.

"Turn–ON"
Test which the SDM performs on the SRS once during each ignition cycle immediately after "Ignition 1" voltage is applied to the SDM and before "Continuous Monitoring".

Diagnosis

WARNING: TO AVOID DEPLOYMENT WHEN TROUBLESHOOTING THE SRS, DO NOT USE ELECTRICAL TEST EQUIPMENT SUCH AS A BATTERY–POWERED OR AC–POWERED VOLTMETER, OHMMETER, ETC., OR ANY TYPE OF ELECTRICAL EQUIPMENT OTHER THAN THAT SPECIFIED IN THIS MANUAL. DO NOT USE A NONPOWERED PROBE–TYPE TESTER. INSTRUCTIONS IN THIS MANUAL MUST BE FOLLOWED CAREFULLY, OTHERWISE PERSONAL INJURY MAY RESULT.

Diagnostic Trouble Codes

The "SRS Diagnostic System Check" must always be the starting point of any SRS diagnosis. The "SRS Diagnostic System Check" checks for proper "AIR BAG" warning lamp operation and checks for SRS diagnostic trouble codes using the scan tool.

1. Current diagnostic trouble codes – Malfunctions that are presently being detected. Current diagnostic trouble codes are stored in RAM (Random Access Memory).
2. History diagnostic trouble codes – All malfunctions detected since the last time the history memory was cleared. History diagnostic trouble codes are stored in EEPROM.

Scan Tool Diagnostics

A scan tool is used to read current and history diagnostic trouble codes and to clear all diagnostic trouble codes after a repair is completed. The scan tool must be updated to communicate with the SRS through a replaceable cartridge before it can be used for SRS diagnostics. To use the scan tool, connect it to the data link connector and turn the ignition switch "ON". The scan tool reads serial data from the SDM "Serial Data" line terminal "24" to the data link connector terminal "9".

Use Of Special Tools

WARNING: TO AVOID DEPLOYMENT WHEN TROUBLESHOOTING THE SRS, DO NOT USE ELECTRICAL TEST EQUIPMENT SUCH AS A BATTERY–POWERED OR AC–POWERED VOLTMETER, OHMMETER, ETC, OR ANY TYPE OF ELECTRICAL EQUIPMENT OTHER THAN THAT SPECIFIED IN THIS MANUAL. DO NOT USE A NON POWERED PROBE–TYPE TESTER. INSTRUCTIONS IN THIS MANUAL MUST BE FOLLOWED CAREFULLY, OTHERWISE PERSONAL INJURY MAY RESULT. YOU SHOULD BE FAMILIAR WITH THE TOOLS LISTED IN THIS SECTION UNDER THE HANDLING SRS SPECIAL TOOLS.

You should be able to measure voltage and resistance. You should be familiar with proper use of a scan tool such as the Tech 2 Diagnostic Computer, SRS Driver/Passenger Load Tool J–41433, Connector Test Adapter Kit J–35616–A, and the DVM (Digital Multimeter) J–39200.

Downloaded from www.Manualslib.com manuals search engine

SRS Connector Body Face Views

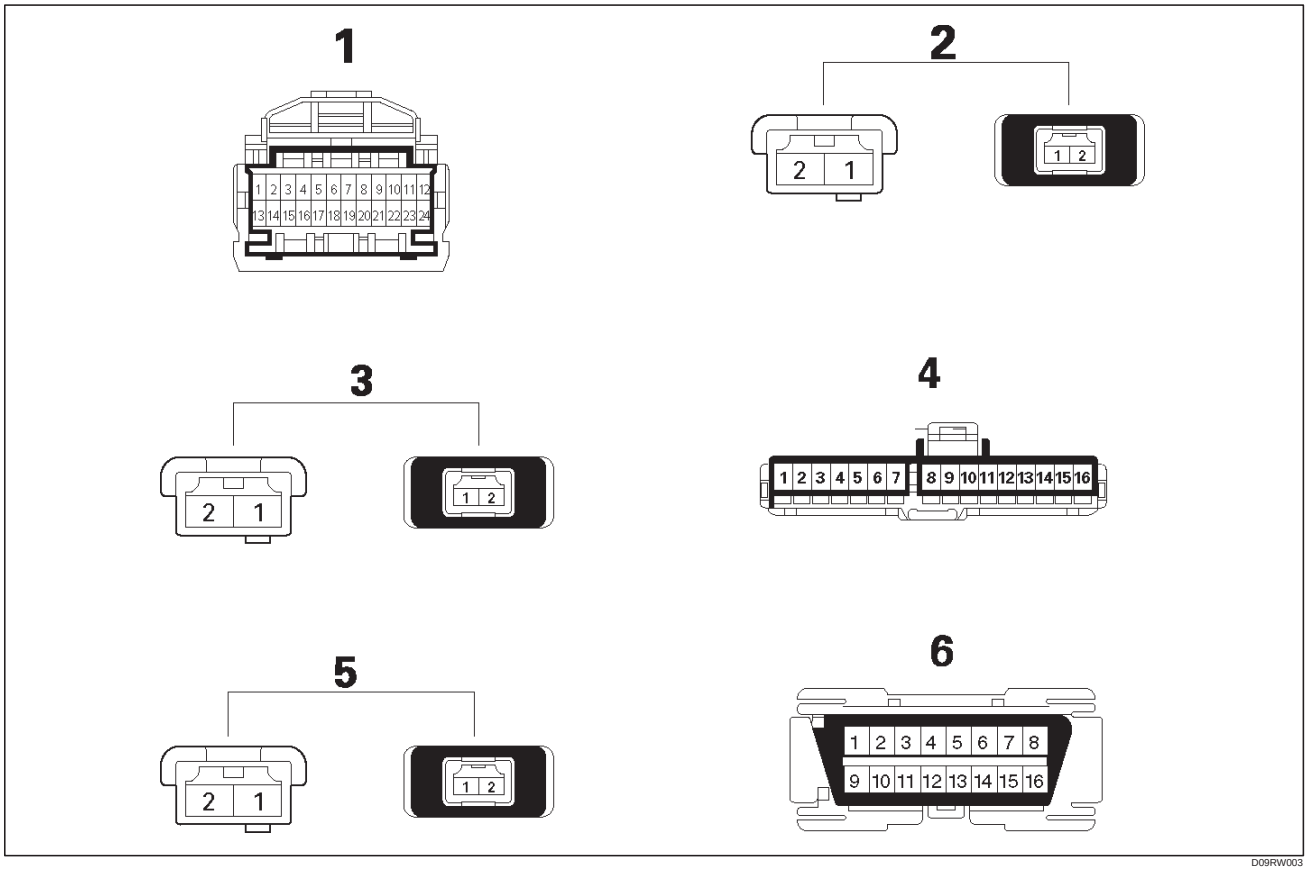

Legend

(1) SDM
(2) Driver Air Bag Assembly
(3) Passenger Air Bag Assembly
(4) “Air Bag” Warning Lamp
(5) SRS Coil Assembly
(6) DLC Connector

Repairs And Inspections Required After An Accident

NOTE: If any SRS components are damaged, they must be replaced. If SRS component mounting points are damaged, they must be replaced.

- Never use SRS parts from another vehicle. This does not include remanufactured parts purchased from an authorized dealer; they may be used for SRS repairs.
- Do not attempt to service the SDM, the SRS coil assembly, or the air bag assembly. Service of these items is by replacement only.
- Verify the part number of replacement air bag assembly.

CAUTION: Never use the air bag assembly from another vehicle and difference model year air bag assembly.

The air bag assembly has identification colors on the bar code label from ’00 model as follows.

Yellow color for driver air bag assembly.

White color for passenger air bag assembly.

Use only new air bag assembly proper to the Trooper which is being repaired.

CAUTION: Proper operation of the sensors and supplemental restraint system (SRS) requires that any repairs to the vehicle structure return it to the original production configuration. Deployment requires, at a minimum, replacement of the SDM, air bag assembly and dimensional inspection of the steering column. Any visible damage to the SDM mounting bracket (s) requires replacement, and the steering column must be dimensionally inspected, whether deployment occurred or not.

Accident With Deployment – Component Replacement And Inspections

Certain SRS components must be replaced or inspected for damage after a frontal crash involving air bag deployment. Those components are:

- Air bag assembly
- SDM

Downloaded from www.Manualslib.com manuals search engine

CAUTION: Refer to "SDM Replacement Guidelines" below for important information on SDM replacement in both deployment and non deployment crashes.

- SRS coil assembly — Inspect wiring and connector for any signs of scorching, melting, or damage due to excessive heat. Replace if damaged. Refer to section "SRS Coil Assembly" in this manual.

Accident With or Without Deployment – Component Inspection

Certain SRS system components and rotation parts must be inspected after any crash, whether the air bag deployed or not. Those components are:

- Steering column — Refer to Inspection Required "After an Accident" in this manual.
- Knee bolsters and mounting points — Inspect for any distortion, bending, cracking, or other damage.
- I/P steering column reinforcement plate — Inspect for any distortion, bending, cracking, or other damage.
- I/P braces — Inspect for any distortion, bending, cracking, or other damage.
- Seat belts and mounting points — Refer to "Seat Belts" in Section "Seat Belt" of this workshop manual.

SDM Replacement Guidelines

SDM replacement policy requires replacement of SDM, after crash involving air bag deployment when "SRS Warning Lamp" turn "ON", "SRS Diagnosis" should be done according to Section "Restraint Control System."

Wiring Damage

If any SRS wire harness is damaged, it should be replaced. Don't repair SRS harness. It is replace only.

SRS Connector (Plastic Body And Terminal Metal Pin) Damage

If any connector or terminal in the SRS wire harness (except pigtails) is damaged, it should be replaced.

SRS Wire Pigtail Damage

If the wiring pigtail (a wire or wires attached directly to the device, not by a connector) is damaged, the entire component (with pigtail) must be replaced. Examples of "pigtail" components are the driver air bag assembly, the passenger air bag assembly, and the SRS coil assembly.

On–Vehicle Service

Service Precaution

WARNING: WHEN PERFORMING SERVICE ON OR AROUND SRS COMPONENTS OR SRS WIRING, FOLLOW THE PROCEDURES LISTED BELOW TO TEMPORARILY DISABLE THE SRS. FAILURE TO FOLLOW PROCEDURES COULD RESULT IN POSSIBLE AIR BAG DEPLOYMENT, PERSONAL INJURY OR OTHERWISE UNNEEDED SRS REPAIRS.

The SDM in Driver–Passenger SRS can maintain sufficient voltage to cause a deployment for up to 15 seconds after the ignition switch is turned "OFF," the battery is disconnected, or the fuse powering the SDM is removed.

Many of the service procedures require removal of the "C–21" fuse, and disconnection of the air bag assembly from the deployment loop to avoid an accidental deployment. If the air bag assembly is disconnected from the deployment loop as noted in the "Disabling the SRS" procedure that follows, service can begin immediately without waiting for the 15 second time period to expire.

Disabling The SRS

Removal

Turn the ignition switch to "LOCK" and remove key.

1. Remove SRS fuse C–21, from left dash side lower fuse block or disconnect battery.
2. Disconnect yellow 2–pin connector at the base of steering column.
3. Remove glove box assembly, refer to "Passenger Air Bag Assembly Replacement" in this manual.
4. Disconnect yellow 2–pin connector behind the glove box assembly.

CAUTION: With the "C–21" fuse removed and ignition switch "ON", the "AIR BAG" warning lamp will be "ON". This is normal operation and does not indicate an SRS malfunction.

Enabling The SRS

Installation

CAUTION: Never use the air bag assembly from another vehicle and difference model year air bag assembly.

The air bag assembly has identification colors on the bar code label from '00 model as follows.

Yellow color for driver air bag assembly.

White color for passenger air bag assembly.

Use only new air bag assembly proper to the Trooper which is being repaired.

Turn ignition switch to "LOCK" and remove key.

1. Connect yellow 2–pin connector passenger air bag assembly.
2. Install glove box assembly. Refer to "Passenger air bag assembly replacement" in this manual.
3. Connect yellow 2–pin connector at the base of steering column.
4. Install "AIR BAG" fuse C–21 to left dash side lower fuse block or connect battery.

Turn ignition switch to "ON" and verify that the "AIR BAG" warning lamp flashes seven times and then turns "OFF." If it does not operate as described, perform the "SRS Diagnostic System Check" in this manual.

Downloaded from www.Manualslib.com manuals search engine

Handling / Installation / Diagnosis

1. Air bag assembly should not be subjected to temperatures above 65˚C (150˚F).
2. Air bag assembly, and SDM should not be used if they have been dropped from a height of 100 centimeters (3.28 feet) or more.
3. When a SDM is replaced, it must be oriented with the arrow on the sensor pointing toward the front of the vehicle. It is very important for the SDM to be located flat on the mounting surface, parallel to the vehicle datum line. It is important that the SDM mounting surface is free of any dirt or other foreign material.
4. Do not apply power to the SRS unless all components are connected or a diagnostic chart requests it, as this will set a diagnostic trouble code.
5. The “SRS Diagnostic System Check” must be the starting point of any SRS diagnostics. The “SRS Diagnostic System Check” will verify proper “AIR BAG” warning lamp operation and will lead you to the correct chart to diagnose any SRS malfunctions. Bypassing these procedures may result in extended diagnostic time, incorrect diagnosis, and incorrect parts replacement.

Air Bag Assembly Handling / Shipping / Scrapping

Live (Undeployed) Air Bag Assembly

Special care is necessary when handling and storing a live (undeployed) air bag assembly. The rapid gas generation produced during deployment of the air bag could cause the air bag assembly, or an object in front of the air bag assembly, to be thrown through the air in the unlikely event of an accidental deployment.

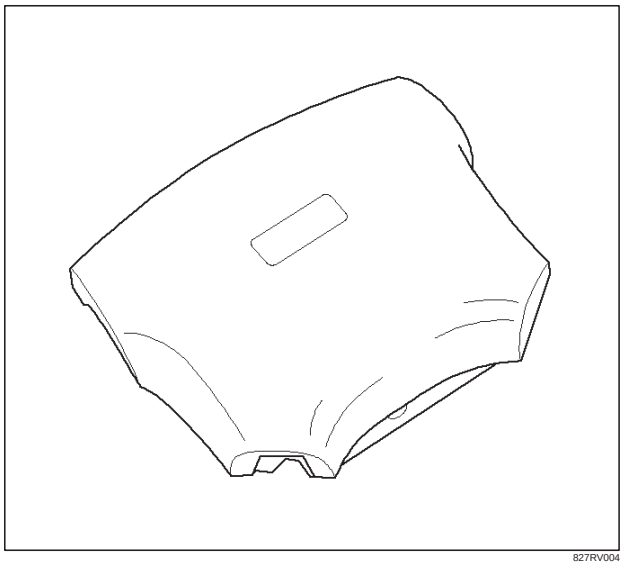

827RV004

WARNING: WHEN CARRYING A LIVE AIR BAG ASSEMBLY, MAKE SURE THE BAG OPENING IS POINTED AWAY FROM YOU. IN CASE OF AN ACCIDENTAL DEPLOYMENT, THE BAG WILL THEN DEPLOY WITH MINIMAL CHANCE OF INJURY. NEVER CARRY THE AIR BAG ASSEMBLY BY THE WIRES OR CONNECTOR ON THE UNDERSIDE OF THE MODULE.

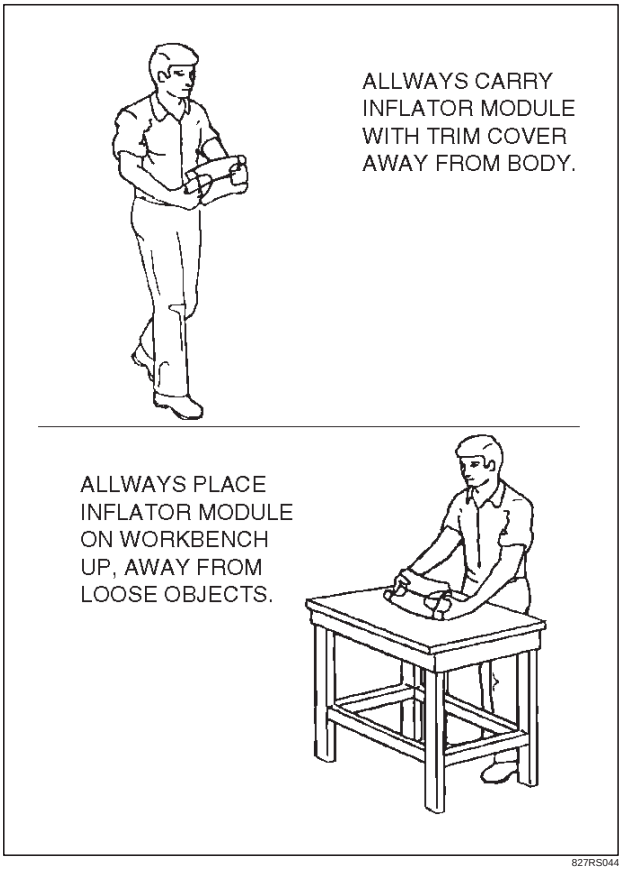

827RS044

Air Bag Assembly Shipping Procedure For Live (Undeployed) Air Bag Assemblies

Service personnel should refer to the latest Service Bulletins for proper SRS air bag assembly shipping procedures.

Deployed Air Bag Assembly (Driver Side)

You should wear gloves and safety glasses. After the air bag assembly has been deployed, the surface of the air bag may contain a powdery residue. This powder consists primarily of cornstarch (used to lubricate the bag as it inflates) and by products of the chemical reaction. Sodium hydroxide dust (similar to lye soap) is produced as a by product of the deployment reaction. The sodium hydroxide then quickly reacts with atmospheric moisture and is converted to sodium carbonate and sodium bicarbonate (baking soda). Therefore, it is unlikely that sodium hydroxide will be present.

Air Bag Assembly Scrapping Procedure

During the course of a vehicle’s useful life, certain situations may arise which will necessitate the disposal of a live (undeployed) air bag assembly. This information covers proper procedures for disposing of a live air bag assembly.

Before a live air bag assembly can be disposed of, it must be deployed. A live air bag assembly must not be disposed of through normal refuse channels.

Downloaded from www.Manualslib.com manuals search engine

WARNING: FAILURE TO FOLLOW PROPER SUPPLEMENTAL RESTRAINT SYSTEM (SRS) AIR BAG ASSEMBLY DISPOSAL PROCEDURES CAN RESULT IN AIR BAG DEPLOYMENT WHICH MAY CAUSE PERSONAL INJURY. AN UNDPLOYED AIR BAG ASSEMBLY MUST NOT BE DISPOSED OF THROUGH NORMAL REFUSE CHANNELS. THE UNDEPLOYED AIR BAG ASSEMBLY CONTAINS SUBSTANCES THAT CAN CAUSE SEVERE ILLNESS OR PERSONAL INJURY IF THE SEALED CONTAINER IS DAMAGED DURING DISPOSAL. DISPOSAL IN ANY MANNER INCONSISTENT WITH PROPER PROCEDURES MAY BE A VIOLATION OF FEDERAL, STATE, AND / OR LOCAL LAW.

In situations which require deployment of a live air bag assembly, deployment may be accomplished inside or outside the vehicle. The method employed depends upon the final disposition of the particular vehicle, as noted in “Deployment Outside Vehicle” and “Deployment Inside Vehicle” in this section.

Deployment Outside Vehicle (Driver Air Bag Assembly)

Deployment outside the vehicle is proper when the vehicle is to be returned to service. This includes, for example, situations in which the vehicle will be returned to useful service after a functionally or cosmetically deficient air bag assembly is replaced. Deployment and disposal of a malfunctioning air bag assembly is, of course, subject to any required retention period.

For deployment of a live (undeployed) air bag assembly outside the vehicle, the deployment procedure must be followed exactly. Always wear safety glasses during this deployment procedure until a deployed air bag assembly is scrapped or until an undeployed air bag assembly is shipped. Before performing the procedures you should be familiar with servicing the SRS and with proper handling of the air bag assembly. Procedures should be read fully before they are performed.

The following procedure requires use of J–42986 SRS deployment harness with appropriate pigtail adapter. Do not attempt procedure without J–42986 adapter.

WARNING: FAILURE TO FOLLOW PROCEDURES IN THE ORDER LISTED MAY RESULT IN PERSONAL INJURY. NEVER CONNECT DEPLOYMENT HARNESS TO ANY POWER SOURCE BEFORE CONNECTING DEPLOYMENT HARNESS TO THE DRIVER AIR BAG ASSEMBLY. DEPLOYMENT HARNESS SHALL REMAIN SHORTED AND NOT BE CONNECTED TO A POWER SOURCE UNTIL THE AIR BAG IS TO BE DEPLOYED. THE AIR BAG ASSEMBLY WILL IMMEDIATELY DEPLOY THE AIR BAG WHEN A POWER SOURCE IS CONNECTED TO IT. WEAR SAFETY GLASSES THROUGHOUT THIS ENTIRE DEPLOYMENT AND DISPOSAL PROCEDURE.

NOTE: This information applies only to driver air bag assembly . Refer to “Deployment Outside Vehicle (Passenger Air Bag assembly)” in this section for information on passenger air bag assembly scrapping.

1. Turn ignition switch to “LOCK”, remove key and put on safety glasses.
2. Inspect J–42986 SRS Deployment Harness and appropriate pigtail adapter for damage. If harness or pigtail adapter is damaged, discard and obtain a replacement.
3. Short the two SRS deployment harness leads together by fully seating one banana plug into the other. SRS deployment harness shall remain shorted and not be connected to a power source until the air bag is to be deployed.

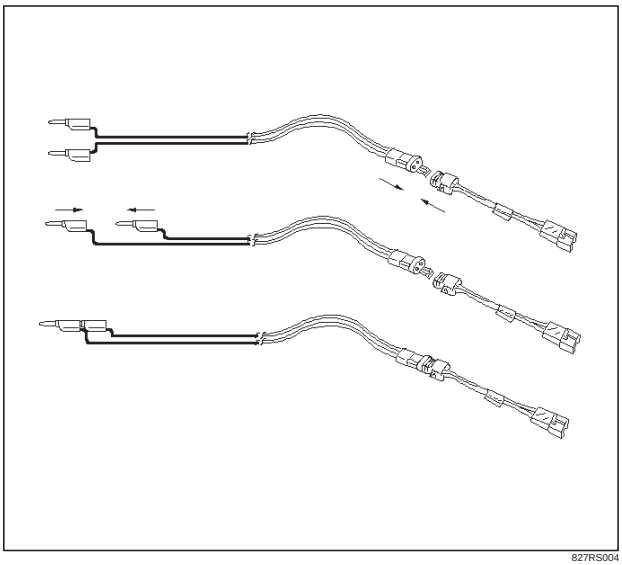

827RS004

4. Connect the appropriate pigtail adapter to the SRS deployment harness.
5. Remove the driver air bag assembly from vehicle. Refer to “Inflator Module Removal” in this manual.

WARNING: WHEN STORING A LIVE AIR BAG ASSEMBLY OR WHEN LEAVING A LIVE AIR BAG ASSEMBLY UNATTENDED ON A BENCH OR OTHER SURFACE, ALWAYS FACE THE AIR BAG AND TRIM COVER UP AND AWAY FROM THE SURFACE. THIS IS NECESSARY SO THAT A FREE SPACE IS PROVIDED TO ALLOW THE AIR BAG TO EXPAND IN THE UNLIKELY EVENT OF ACCIDENTAL DEPLOYMENT. FAILURE TO FOLLOW PROCEDURES MAY RESULT IN PERSONAL INJURY.

Downloaded from www.Manualslib.com manuals search engine

6. Place the driver air bag assembly on a work bench or other surface away from all loose or flammable objects with its trim cover facing up, away from the surface.

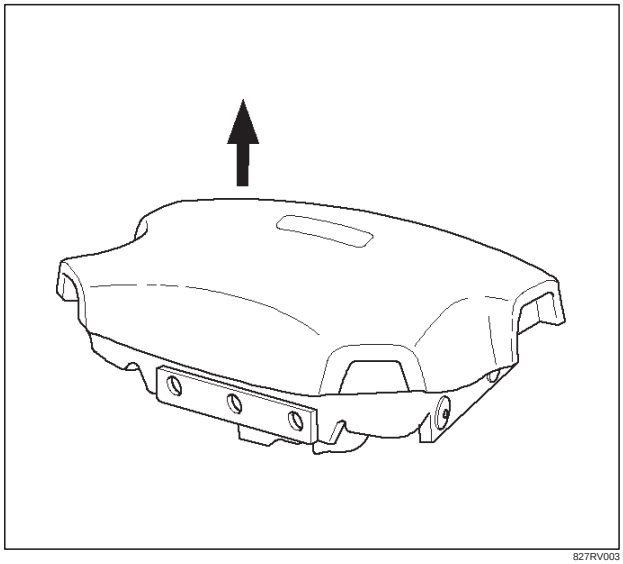

827RV003

7. Clear a space on the ground about 183 cm (six feet) in diameter where the driver air bag assembly is to be deployed. A paved, outdoor location where there is no activity is preferred. If an outdoor location is not available, a space on the shop floor where there is no activity and sufficient ventilation is recommended. Ensure no loose or flammable objects are within the deployment area.

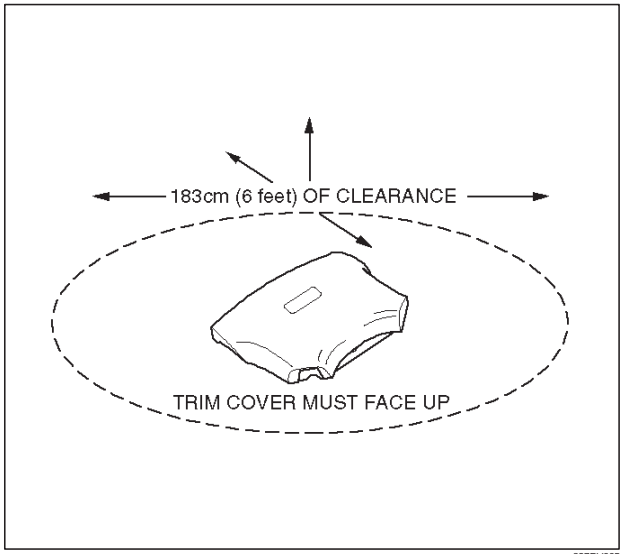

827RV005

8. Place the driver air bag assembly, with its trim cover facing up, on the ground in the space just cleared.
9. Stretch the SRS deployment harness and pigtail adapter from the driver air bag assembly to its full length.
10. Place a power source near the shorted end of the SRS deployment harness. Recommended application: 12 volts minimum, 2 amps minimum. A vehicle battery is suggested.
11. Connect the driver air bag assembly to the pigtail adapter on the SRS deployment harness. Deployment harness shall remain shorted and not be connected to a power source until the air bag is to be deployed. The driver air bag assembly will immediately deploy the air bag when a power source is connected to it.

NOTE: Ensure that the pigtail adapter is firmly seated into the driver air bag assembly connector. Failure to fully seat the connectors may leave the shorting bar located in the driver air bag assembly connector functioning (shorted) and may result in nondeployment of the driver air bag assembly.

12. Verify that the area around the driver air bag assembly is clear of all people and loose or flammable objects.
13. Verify that the driver air bag assembly is resting with its trim cover facing up.
14. Notify all people in the immediate area that you intend to deploy the driver air bag. The deployment will be accompanied by a substantial noise which may startle the uninformed.
15. Separate the two banana plugs on the SRS deployment harness.

NOTE: When the air bag deploys, the driver air bag assembly may jump about 30 cm (one foot) vertically. This is a normal reaction of the driver air bag to the force of the rapid gas expansion inside the air bag.

NOTE: When the air bag deploys, the rapid gas expansion will create a substantial noise. Notify all people in the immediate area that you intend to deploy the driver air bag.

WARNING: DEPLOYMENT HARNESS SHALL REMAIN SHORTED AND NOT BE CONNECTED TO A POWER SOURCE UNTIL THE AIR BAG IS TO BE DEPLOYED. THE AIR BAG ASSEMBLY WILL IMMEDIATELY DEPLOY THE AIR BAG WHEN A POWER SOURCE IS CONNECTED TO IT. CONNECTING THE DEPLOYMENT HARNESS TO THE POWER SOURCE SHOULD ALWAYS BE THE LAST STEP IN THE AIR BAG ASSEMBLY DEPLOYMENT PROCEDURE. FAILURE TO FOLLOW PROCEDURES IN THE ORDER LISTED MAY RESULT IN PERSONAL INJURY.

16. Connect the SRS deployment harness wires to the power source to immediately deploy the driver air bag. Recommended application: 12 volts minimum, 2 amps minimum. A vehicle battery is suggested.
17. Disconnect the SRS deployment harness from the power source.
18. Short the two SRS deployment harness leads together by fully seating one banana plug into the other.

Downloaded from www.Manualslib.com manuals search engine

19. In the unlikely event that the driver air bag assembly did not deploy after following these procedures, proceed immediately with Steps 24 through 26. If the driver air bag assembly did deploy, proceed with Steps 20 through 23.
20. Put on a pair of shop gloves and safety glasses to protect your hands and eyes from possible irritation and heat when handling the deployed driver air bag assembly. After the air bag assembly has been deployed, the surface of the air bag may contain a powdery residue. This power consists primarily of cornstarch (used to lubricate the bag as it inflates) and by products of the chemical reaction. Sodium hydroxide dust (similar to lye soap) is produced as a by product of the deployment reaction. The sodium hydroxide then quickly reacts with the atmospheric moisture and is converted to sodium carbonate and sodium bicarbonate (baking soda). Therefore, it is unlikely that sodium hydroxide will be present after deployment.

WARNING: SAFETY PRECAUTIONS MUST BE OBSERVED WHEN HANDING A DEPLOYED AIR BAG ASSEMBLY. AFTER DEPLOYMENT, THE METAL SURFACES OF THE AIR BAG ASSEMBLY WILL BE VERY HOT. ALLOW THE INFLATOR MODULE TO COOL BEFORE HANDLING ANY METAL PORTION OF IT. DO NOT PLACE THE DEPLOYED AIR BAG ASSEMBLY NEAR ANY FLAMMABLE OBJECTS. FAILURE TO FOLLOW PROCEDURES MAY RESULT IN FIRE OR PERSONAL INJURY.

AFTER A DRIVER AIR BAG ASSEMBLY HAS BEEN DEPLOYED, THE METAL CANISTER AND SURROUNDING AREAS OF THE DRIVER AIR BAG ASSEMBLY WILL BE VERY HOT. DO NOT TOUCH THE METAL AREAS OF THE DRIVER AIR BAG ASSEMBLY FOR ABOUT TEN MINUTES AFTER DEPLOYMENT. IF THE DEPLOYED DRIVER AIR BAG ASSEMBLY MUST BE MOVED BEFORE IT IS COOL, WEAR GLOVES AND HANDLE BY THE AIR BAG OR TRIM COVER.

21. Disconnect the pigtail adapter from the driver air bag assembly as soon after deployment as possible. This will prevent damage to the pigtail adapter or SRS deployment harness due to possible contact with the hot driver air bag assembly canister. The pigtail adapter can be reused. They should, however, be inspected for damage after each deployment and replaced if necessary.
22. Dispose of the deployed driver air bag assembly through normal refuse channels after it has cooled for at least 30 minutes.
23. Wash your hands with mild soap and water afterward.

NOTE: The remaining steps are to be followed in the unlikely event that the driver air bag assembly did not deploy after following these procedures.

24. Ensure that the SRS deployment harness has been disconnected from the power source and that its two banana plugs have been shorted together by fully seating one banana plug into the other.
25. Disconnect the pigtail adapter from the driver air bag assembly.

WARNING: WHEN STORING A LIVE AIR BAG ASSEMBLY OR WHEN LEAVING A LIVE INFLATOR MODULE UNATTENDED ON A BENCH OR OTHER SURFACE, ALWAYS FACE THE BAG AND TRIM COVER UP AND AWAY FROM THE SURFACE. THIS IS NECESSARY SO THAT A FREE SPACE IS PROVIDED TO ALLOW THE AIR BAG TO EXPAND IN THE UNLIKELY EVENT OF ACCIDENTAL DEPLOYMENT. FAILURE TO FOLLOW PROCEDURES MAY RESULT IN PERSONAL INJURY.

26. Temporarily store the driver air bag assembly with its trim cover facing up, away from the surface upon which it rests.

Deployment Outside Vehicle (Passenger Air Bag Assembly)

WARNING: FAILURE TO FOLLOW PROPER SRS AIR BAG ASSEMBLY DISPOSAL PROCEDURES CAN RESULT IN AIR BAG DEPLOYMENT WHICH MAY CAUSE PERSONAL INJURY. UNDEPLOYED AIR BAG ASSEMBLIES MUST NOT BE DISPOSED OF THROUGH NORMAL REFUSE CHANNELS. THE UNDEPLOYED AIR BAG ASSEMBLY CONTAINS SUBSTANCES THAT CAN CAUSE SEVERE ILLNESS OR PERSONAL INJURY IF THE SEALED CONTAINER IS DAMAGED DURING DISPOSAL. DISPOSAL IN ANY MANNER INCONSISTENT WITH PROPER PROCEDURES MAY BE A VIOLATION OF FEDERAL, STATE AND/OR LOCAL LAWS.

Deployment out of the vehicle is proper when the vehicle is to be returned to service. This includes, for example, situations in which a functionally or cosmetically deficient air bag assembly is replaced. Deployment and disposal of an air bag assembly is, of course, subject to any required retention period.

For deployment of a live air bag assembly out of the vehicle, the deployment procedure must be followed exactly. Always wear safety glasses during this deployment procedure until the deployed air bag assembly is scrapped. Before performing the procedures, you should be familiar with servicing the SRS system and with proper handling of the air bag assembly. Procedures should be read fully before they are performed.

The following procedure requires use of J–42986 SRS Deployment Harness with the appropriate pigtail adapter. The procedure also requires the use of J–41497 Passenger Side SRS Module Deployment Fixture. Do not attempt this procedure without J–42986 and adapter, and J–41497.

WARNING: FAILURE TO FOLLOW PROCEDURES IN THE ORDER LISTED MAY RESULT IN PERSONAL INJURY. NEVER CONNECT DEPLOYMENT HARNESS TO ANY POWER SOURCE BEFORE CONNECTING DEPLOYMENT HARNESS TO THE AIR BAG ASSEMBLY. DEPLOYMENT HARNESS SHALL REMAIN SHORTED AND NOT BE CONNECTED TO A POWER SOURCE UNTIL THE AIR BAG IS TO BE DEPLOYED. THE AIR BAG ASSEMBLY WILL IMMEDIATELY DEPLOY THE AIR BAG WHEN A POWER SOURCE IS CONNECTED TO IT. WEAR SAFETY GLASSES THROUGHOUT THIS ENTIRE DEPLOYMENT AND DISPOSAL PROCEDURE.

Downloaded from www.Manualslib.com manuals search engine

NOTE: This information applies only to passenger air bag assembly. Information for disposing of a live driver air bag assembly can be found in “Deployment Outside Vehicle” (Driver Air Bag Assembly) in this section.

1. Turn ignition switch to “LOCK” remove key, and put on safety glasses.
2. Inspect J–42986 SRS Deployment Harness and appropriate pigtail adapter for damage. If harness or pigtail is damaged, discard and obtain a replacement.
3. Short the two SRS Deployment Harness leads together by fully seating one banana plug into the other. The SRS Deployment Harness shall remain shorted and not be connected to a power source until the air bag is to be deployed.

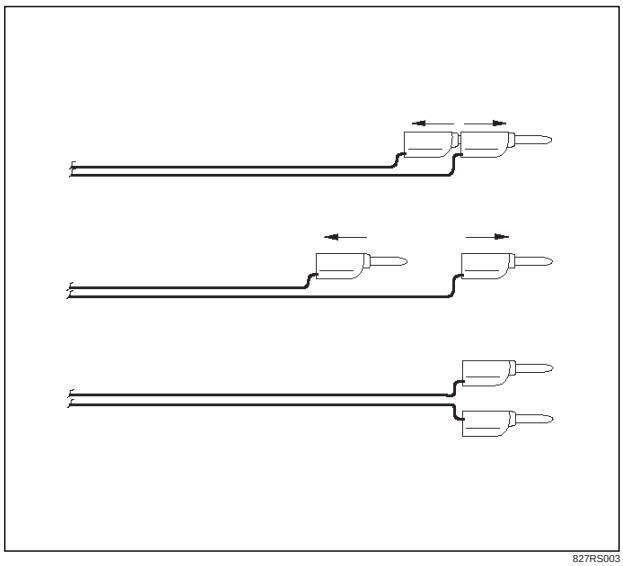

827RS003

4. Connect the appropriate pigtail adapter to the SRS Deployment Harness

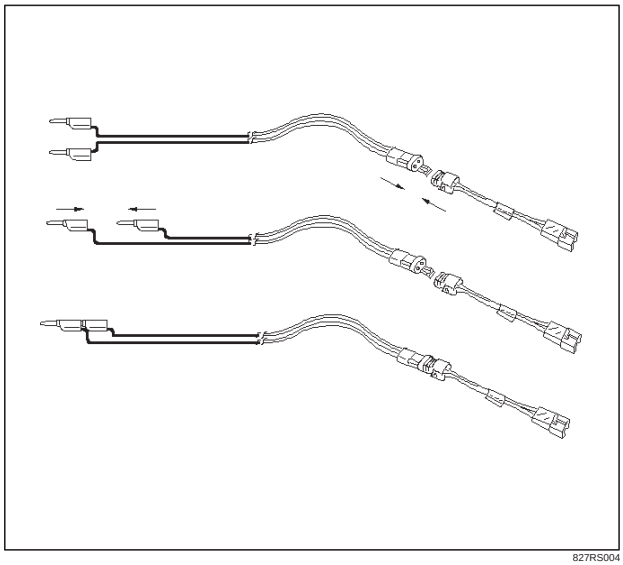

827RS004

5. Remove passenger air bag assembly from vehicle. Refer to “Passenger Air Bag Assembly Removal ” in this Section 9J–3.
6. Clear a space on the ground approximately 183 cm (six feet) in diameter where the fixture with attached air bag assembly is to be placed for deployment. A paved outdoor location where there is no activity is preferred. If an outdoor location is not available, a space on the shop floor where is no activity and sufficient ventilation is recommended. Ensure that no loose or flammable objects are within the deployment area.
7. Place the J–41497 on the bench vice. This is necessary to provide sufficient stabilization of the fixture during deployment.
8. Attach the passenger air bag assembly in the J–41497. An air bag assembly must be mounted such that the bag will deploy upward. SECURELY HAND–TIGHTEN ALL FASTENERS PRIOR TO DEPLOYMENT.

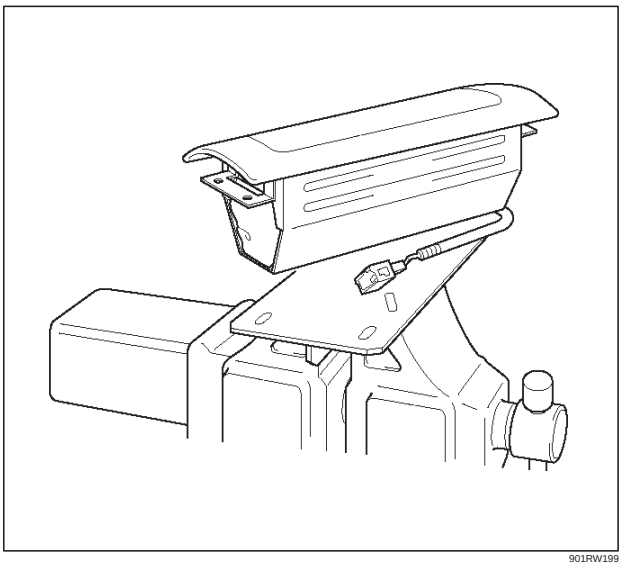

901RW199

9. Stretch the SRS Deployment Harness and pigtail adapter from the air bag assembly to its full length.
10. Place a power source near the shorted end of the SRS deployment harness. (Recommended application: 12 volts minimum, 2 amps minimum. A vehicle battery is suggested.)
11. Connect the air bag assembly to the pigtail adapter on the SRS deployment harness. The SRS Deployment Harness shall remain shorted and not be connected to a power source until the air bag is to be deployed. The air bag assembly will immediately deploy the air bag when a power source is connected to it.

NOTE: Ensure that the pigtail adapter is firmly seated into the air bag assembly connector. Failure to fully seat the connectors may leave the shorting bar located in the air bag assembly connector functioning (shorting the deployment circuit) and may result in nondeployment of the air bag assembly.

12. Verify that the area around the passenger air bag assembly is clear of all people and loose or flammable objects.
13. Verify that the passenger air bag assembly is firmly and properly in J–41497.

Downloaded from www.Manualslib.com manuals search engine

14. Notify all people in the immediate area of your intention to deploy the passenger air bag assembly. The deployment will be accompanied by a substantial noise which may startle the uninformed.
15. Separate the two banana plugs on the SRS deployment harness.

NOTE: When air bag deploys, the rapid gas expansion will create a substantial noise. Notify all people in the immediate area that you intend to deploy the air bag assembly.

WARNING: DEPLOYMENT HARNESS SHALL REMAIN SHORTED AND NOT BE CONNECTED TO A POWER SOURCE UNTIL THE AIR BAG IS TO BE DEPLOYED. THE AIR BAG ASSEMBLY WILL IMMEDIATELY DEPLOY THE AIR BAG WHEN A POWER SOURCE IS CONNECTED TO IT. CONNECTING THE DEPLOYMENT HARNESS TO THE POWER SOURCE SHOULD ALWAYS BE THE LAST STEP IN THE AIR BAG ASSEMBLY DEPLOYMENT PROCEDURE. FAILURE TO FOLLOW PROCEDURES IN THE ORDER LISTED MAY RESULT IN PERSONAL INJURY.

16. Connect the SRS deployment harness wires to the power source to immediately deploy the air bag assembly. Recommended application : 12 volts minimum, 2 amps minimum. A vehicle battery is suggested.
17. Disconnect the SRS deployment harness from the power source.
18. Short the two SRS deployment harness leads together by fully seating one banana plug into the other.
19. In the unlikely event that the passenger air bag assembly did not deploy after following these procedures, proceed immediately with Steps 24 through 26. If the passenger air bag assembly deployed as intended, proceed with Steps 20 through 23.
20. The passenger inflator requires no special precaution after deployment. 95% of the particulate emission are potassium ckloride (KLC), which is commonly sold as an edible salt–substitutes. even if water is applied. Post deployment products are relatively pH neutral. Disposing the inflator by burying it in a landfill will not produce any hazardous products. As with any dusty environment, safety goggles, dust mask and gloves should be worn.

WARNING: SAFETY PRECAUTIONS MUST BE OBSERVED WHEN HANDLING A DEPLOYED AIR BAG ASSEMBLY. AFTER DEPLOYMENT, THE METAL SURFACES OF THE AIR BAG ASSEMBLY WILL BE HOT. ALLOW THE AIR BAG ASSEMBLY TO COOL BEFORE HANDLING ANY METAL PORTION OF IT. DO NOT PLACE THE DEPLOYED INFLATOR MODULE NEAR ANY FLAMMABLE OBJECTS. FAILURE TO FOLLOW PROCEDURES MAY RESULT IN FIRE OR PERSONAL INJURY. AFTER AN AIR BAG ASSEMBLY HAS BEEN DEPLOYED, THE METAL CANISTER AND SURROUNDING AREAS OF THE AIR BAG ASSEMBLY WILL BE HOT. DO NOT TOUCH THE METAL AREAS OF THE AIR BAG ASSEMBLY FOR ABOUT THIRTY MINUTES AFTER DEPLOYMENT. IF THE DEPLOYED AIR BAG ASSEMBLY MUST BE MOVED BEFORE IT IS COOL, WEAR GLOVES AND HANDLE BY THE AIR BAG ITSELF.

21. Disconnect the pigtail adapter from the air bag assembly as soon after deployment as possible to avoid damage to the pigtail adapter or SRS deployment harness from contacting the hot air bag assembly canister. The pigtail adapter and SRS deployment harness are designed to be reused. They should, however, be inspected for damage after each deployment and replaced if necessary.
22. Dispose of the deployed air bag assembly through normal refuse channels after it has cooled for at least 30 minutes.
23. Wash your hands with mild soap and water afterward.

NOTE: The remaining steps are to be followed in the unlikely event that the air bag assembly did not deploy after following the above procedures.

24. Ensure that the SRS deployment harness has been disconnected from the power source and that its two banana plugs have been shorted together by fully seating one banana plug into the other.
25. Disconnect the pigtail adapter from the air bag assembly.

WARNING: WHEN STORING A LIVE AIR BAG ASSEMBLY OR WHEN LEAVING A LIVE AIR BAG ASSEMBLY UNATTENDED ON A BENCH OR OTHER SURFACE, ALWAYS FACE THE BAG UP AND AWAY FROM THE SURFACE. THIS IS NECESSARY SO THAT A FREE SPACE IS PROVIDED TO ALLOW THE AIR BAG TO EXPAND IN THE UNLIKELY EVENT OF ACCIDENTAL DEPLOYMENT. FAILURE TO FOLLOW PROCEDURES MAY RESULT IN PERSONAL INJURY.

26. Temporarily store the air bag assembly with the bag facing up, away from the surface upon which it rests.

Deployment Inside Vehicle (Vehicle Scrapping Procedure)

Deployment inside vehicle is proper when the vehicle is to be destroyed or salvaged for component parts. This includes, but is not limited to, the following situations:

1. The vehicle has completed its useful life.
2. The vehicle has been damaged beyond repair in a nondeployment type accident.
3. The vehicle has been stripped or damaged beyond repair in a theft.
4. The vehicle will be salvaged for component parts to be used on a vehicle with a different Vehicle Identification Number (VIN) as opposed to being rebuilt as same VIN. Never use SRS components from another vehicle.

WARNING: FAILURE TO FOLLOW PROPER SRS AIR BAG ASSEMBLY DISPOSAL PROCEDURES CAN RESULT IN AIR BAG DEPLOYMENT WHICH MAY CAUSE PERSONAL INJURY. UNDEPLOYED AIR BAG ASSEMBLIES MUST NOT BE DISPOSED OF THROUGH NORMAL REFUSE CHANNELS. THE UNDEPLOYED AIR BAG ASSEMBLY CONTAINS SUBSTANCES THAT CAN CAUSE SEVERE ILLNESS OR PERSONAL INJURY IF THE SEALED CONTAINER

Downloaded from www.Manualslib.com manuals search engine

IS DAMAGED DURING DISPOSAL. DISPOSAL IN ANY MANNER INCONSISTENT WITH PROPER PROCEDURES MAY BE A VIOLATION OF FEDERAL, STATE AND/OR LOCAL LAWS.

1. Turn ignition switch to “LOCK,” remove key and put on safety glasses.
2. Remove all loose objects from front seats.
3. Disconnect driver air bag assembly, yellow 2–pin connector located at the base of the steering column.
4. Cut the driver air bag assembly yellow 2–pin harness connector from the vehicle leaving at least 15 cm (six inches) of wire at the connector.
5. Strip 13 mm (1/2 inch) of insulation from yellow – green and yellow – black wire lead of the connector.
6. Cut two 900 cm (30 feet) deployment wires from 0.8 mm^2 (18 gauge) or thicker multi–strand wire. These wires will be used to fabricate the driver deployment harness.
7. Strip 13 mm (1/2 inch) of insulation from both ends of the wires cut in the previous step.
8. Short the wires by twisting together one end from each. Deployment wires shall remain shorted and not be connected to a power source until the air bag is to be deployed.

WARNING: FAILURE TO FOLLOW PROCEDURES IN THE ORDER LISTED COULD RESULT IN PERSONAL INJURY. NEVER CONNECT DEPLOYMENT WIRES TO ANY POWER SOURCE BEFORE CONNECTING DEPLOYMENT WIRES TO THE AIR BAG ASSEMBLY LEADS. DEPLOYMENT WIRES SHALL REMAIN SHORTED AND BE NOT CONNECTED TO A POWER SOURCE UNTIL THE AIR BAG IS TO BE DEPLOYED. THE AIR BAG ASSEMBLY WILL IMMEDIATELY DEPLOY THE AIR BAG WHEN A POWER SOURCE IS CONNECTED TO IT. WEAR SAFETY GLASSES THROUGHOUT THIS ENTIRE DEPLOYMENT AND DISPOSAL PROCEDURE.

9. Twist together one connector wire lead to one deployment wire. The connection should be mechanically secure.
10. Bend twisted connection made in the previous step flat and wrap tightly with electrical tape to insulate and secure.
11. Twist together, bend and tape the remaining connector wire lead to the remaining deployment wire.
12. Connect the deployment harness to the driver air bag assembly, yellow 2–pin connector at the base of the steering column. Route deployment harness out the driver side of the vehicle.

WARNING: DEPLOYMENT WIRES SHALL REMAIN SHORTED AND NOT BE CONNECTED TO A POWER SOURCE UNTIL THE AIR BAG IS TO BE DEPLOYED.

THE AIR BAG ASSEMBLY WILL IMMEDIATELY DEPLOY THE AIR BAG WHEN A POWER SOURCE IS CONNECTED TO IT.

CONNECTING THE DEPLOYMENT WIRES TO THE POWER SOURCE SHOULD ALWAYS BE THE FINAL STEP IN THE AIR BAG ASSEMBLY DEPLOYMENT PROCEDURE.

FAILURE TO FOLLOW PROCEDURES IN THE ORDER LISTED COULD RESULT IN PERSONAL INJURY.

13. Disconnect passenger air bag assembly, yellow 2–pin connector located behind glove box assembly.
14. Cut the passenger air bag assembly harness connector from the vehicle leaving at least 15 cm (six inches) of wire at the connector.
15. Strip 13 mm (1/2 inch) of insulation from blue–white and pink–blue wire lead of the connector.
16. Cut two 900 cm (30 feet) deployment wires from 0.8 mm^2 (18 gauge) or thicker multi–strand wire. These wires will be used to fabricate the passenger deployment harness.
17. Strip 13 mm (1/2 inch) of insulation from both ends of the wires cut in the previous step.
18. Short the wires by twisting together one end from each. Deployment wires shall remain shorted and not be connected to a power source until the air bag is to be deployed.

WARNING: FAILURE TO FOLLOW PROCEDURES IN THE ORDER LISTED COULD RESULT IN PERSONAL INJURY. NEVER CONNECT DEPLOYMENT WIRES TO ANY POWER SOURCE BEFORE CONNECTING DEPLOYMENT WIRES TO THE AIR BAG ASSEMBLY LEADS. DEPLOYMENT WIRES SHALL REMAIN SHORTED AND NOT BE CONNECTED TO A POWER SOURCE UNTIL THE AIR BAG IS TO BE DEPLOYED. THE AIR BAG ASSEMBLY WILL IMMEDIATELY DEPLOY THE AIR BAG WHEN A POWER SOURCE IS CONNECTED TO IT. WEAR SAFETY GLASSES THROUGHOUT THIS ENTIRE DEPLOYMENT AND DISPOSAL PROCEDURE.

19. Twist together one connector wire lead to one deployment wire. The connection should be mechanically secure.
20. Bend twisted connection made in the previous step flat and wrap tightly with electrical tape to insulate and secure.
21. Twist together, bend and tape the remaining connector wire lead to the remaining deployment wire.
22. Connect the deployment harness to the passenger air bag assembly, yellow 2–pin connector located behind the glove box assembly. Route deployment harness out the passenger side of the vehicle.

WARNING: DEPLOYMENT WIRES SHALL REMAIN SHORTED AND NOT BE CONNECTED TO A POWER SOURCE UNTIL THE AIR BAG IS TO BE DEPLOYED. THE AIR BAG ASSEMBLY WILL IMMEDIATELY DEPLOY THE AIR BAG WHEN A POWER SOURCE IS CONNECTED TO IT. CONNECTING THE DEPLOYMENT WIRES SHOULD ALWAYS BE THE FINAL STEP IN THE AIR BAG ASSEMBLY DEPLOYMENT PROCEDURE. FAILURE TO FOLLOW PROCEDURES IN THE ORDER LISTED COULD RESULT IN PERSONAL INJURY.

Downloaded from www.Manualslib.com manuals search engine

23. Verify that the inside of the vehicle and the area surrounding the vehicle are clear of all people and loose or flammable objects.
24. Stretch the driver and passenger deployment harness to their full length.
25. Completely cover windshield area and front door window openings with a drop cloth, blanket or similar item. This reduces the possibility of injury due to possible fragmentation of the vehicle's glass or interior.
26. Notify all people in the immediate area that you intend to deploy the air bags. The deployment will be accompanied by a substantial noise which may startle the uninformed.
27. Separate the two ends of the driver deployment harness wires.

WARNING: DEPLOYMENT WIRES SHALL REMAIN SHORTED AND NOT BE CONNECTED TO A POWER SOURCE UNTIL THE AIR BAG IS TO A POWER SOURCE UNTIL THE AIR BAG IS TO BE DEPLOYED. THE AIR BAG ASSEMBLY WILL IMMEDIATELY DEPLOY THE AIR BAG WHEN A POWER SOURCE IS CONNECTED TO IT. CONNECTING THE DEPLOYMENT WIRES TO THE POWER SOURCE SHOULD ALWAYS BE THE FINAL STEP IN THE AIR BAG ASSEMBLY DEPLOYMENT PROCEDURE. FAILURE TO FOLLOW PROCEDURES IN THE ORDER LISTED COULD RESULT IN PERSONAL INJURY.

NOTE: When the air bag deploys, the rapid gas expansion will create a substantial noise. Notify all people in the immediate area that you intend to deploy the air bags.

28. Connect the driver deployment harness wires to a power source to immediately deploy the driver air bag assembly. Recommended application: 12 volts minimum, 2 amps minimum. A vehicle battery is suggested.
29. Separate the two ends of the passenger deployment harness wires.

WARNING: DEPLOYMENT WIRES SHALL REMAIN SHORTED AND NOT BE CONNECTED TO A POWER SOURCE UNTIL THE AIR BAG IS TO A POWER SOURCE UNTIL THE AIR BAG IS TO BE DEPLOYED. THE AIR BAG ASSEMBLY WILL IMMEDIATELY DEPLOY THE AIR BAG WHEN A POWER SOURCE IS CONNECTED TO IT. CONNECTING THE DEPLOYMENT WIRES TO THE POWER SOURCE SHOULD ALWAYS BE THE FINAL STEP IN THE AIR BAG ASSEMBLY DEPLOYMENT PROCEDURE. FAILURE TO FOLLOW PROCEDURES IN THE ORDER LISTED COULD RESULT IN PERSONAL INJURY.

30. Connect the passenger deployment harness wires to a power source to immediately deploy the passenger air bag assembly. Recommended application: 12 volts minimum, 2 amps minimum. A vehicle battery is suggested.(Driver air bag assembly) Put on a pair of shop gloves and safety glasses to protect your hands and eyes from possible irritation and heat when handling the deployed air bag assembly. After an air bag assembly has been deployed, the surface of the air bag may contain a powdery residue. This powder consists primarily of cornstarch (used to lubricate the bag as it inflates) and by products of the chemical reaction. Sodium hydroxide dust (similar to lye soap) is produced as a by product of the deployment reaction. The sodium hydroxide then quickly reacts with atmospheric moisture and is converted to sodium carbonate and sodium bicarbonate (baking soda). Therefore, it is unlikely that sodium hydroxide will be present after deployment.(Passenger air bag assembly) The passenger inflator requires no special precaution after deployment. 95% of the particulate emission are potassium chloride (KLC), which is commonly sold as an edible salt–substitutes. even if water is applied. Post deployment products are relatively pH neutral. Disposing the inflator by burying it in a landfill will not products any hazardous products. As with any dusty environment, safety goggles, dust mask and gloves should be worn.

WARNING: SAFETY PRECAUTIONS MUST BE OBSERVED WHEN HANDLING A DEPLOYED AIR BAG ASSEMBLY. AFTER DEPLOYMENT, THE METAL SURFACES OF THE AIR BAG ASSEMBLY WILL BE VERY HOT. ALLOW THE AIR BAG ASSEMBLY TO COOL BEFORE HANDLING ANY METAL PORTION OF IT. DO NOT PLACE THE HOT DEPLOYED AIR BAG ASSEMBLY NEAR ANY FLAMMABLE OBJECTS. FAILURE TO FOLLOW PROCEDURES COULD RESULT IN FIRE OR PERSONAL INJURY.

After an air bag assembly has been deployed, the metal canister and surrounding areas of the air bag assembly will be very hot. Do not touch the metal areas of the air bag assembly for about 30 minutes after deployment. If the deployed air bag assembly must be moved before it is cool, wear gloves and handle by the air bag or trim cover.

31. Short the driver deployment harness wires by twisting together one end from each. Repeat this procedure for the passenger deployment harness.
32. Carefully remove drop cloth from vehicle and clean off any fragments or discard drop cloth entirely.
33. Disconnect driver deployment harness and passenger deployment harness from vehicle and discard.
34. In the unlikely event that either or both of the air bag assemblies did not deploy after following these procedures, proceed immediately with Steps 36 through 37. If the air bag assembly deployed, proceed to step 35.
35. With both air bags deployed, the vehicle may be scrapped in the same manner as a non–SRS equipped vehicle.

Downloaded from www.Manualslib.com manuals search engine

NOTE: The remaining steps are to be followed in the unlikely event that the air bag assembly did not deploy after following these procedures.

36. Remove the undeployed air bag assembly (s) from the vehicle. For driver air bag assembly refer to in the "Passenger Air Bag Assembly Removal" in this manual.

WARNING: WHEN STORING A LIVE AIR BAG ASSEMBLY OR WHEN LEAVING A LIVE AIR BAG ASSEMBLY UNATTENDED ON A BENCH OR OTHER SURFACE, ALWAYS FACE THE BAG AND TRIM COVER UP, AWAY FROM THE SURFACE. THIS IS NECESSARY SO THAT A FREE SPACE IS PROVIDED TO ALLOW THE AIR BAG TO EXPAND IN THE UNLIKELY EVENT OF ACCIDENTAL DEPLOYMENT. FAILURE TO FOLLOW PROCEDURES COULD RESULT IN PERSONAL INJURY.

37. Temporarily store the air bag assembly with the air bag opening facing up, away from the surface upon which it rests.

Deployed Air Bag Assembly Handling

Put on a pair of shop gloves and safety glasses to protect your hands and eyes from possible irritation and heat when handling the deployed air bag assembly.

After the air bag assembly has been deployed, the surface of the air bag may contain a powdery residue. This powder consists primarily of cornstarch (used to lubricate the bag as it inflates) and by products of the chemical reaction. Sodium hydroxide dust (similar to lye soap) is produced as a by product of the deployment reaction. The sodium hydroxide then quickly reacts with atmospheric moisture and is converted to sodium carbonate and sodium bicarbonate (baking soda). Therefore, it is unlikely that sodium hydroxide will be present after deployment.

Downloaded from www.Manualslib.com manuals search engine

Special Tools

WARNING: TO AVOID DEPLOYMENT WHEN TROUBLESHOOTING THE SRS, DO NOT USE ELECTRICAL TEST EQUIPMENT SUCH AS A BATTERY–POWERED OR AC–POWERED VOLTMETER, OHMMETER, ETC., OR ANY TYPE OF ELECTRICAL EQUIPMENT OTHER THAN THAT SPECIFIED IN THIS MANUAL. DO NOT USE A NONPOWERED PROBE–TYPE TESTER. INSTRUCTIONS IN THIS MANUAL MUST BE FOLLOWED CAREFULLY, OTHERWISE PERSONAL INJURY MAY RESULT.

J–41433 SRS Driver/Passenger Load Tool

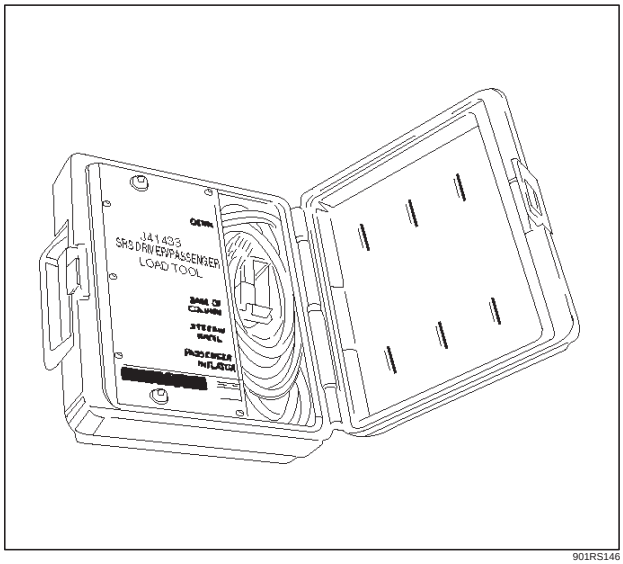

901RS146

The SRS Driver/Passenger Load Tool J–41433 is used only when called for in this section. It is used as a diagnostic aid and safety device to prevent inadvertent air bag assembly deployment.

The load tool has three yellow connectors attached to its case.

The three small connectors are electrically functional and serve as resistive load substitutions.

No more than two connectors are used at any time. One of the small connectors is used to substitute for the load of the driver air bag assembly when it is connected at the top of the column to the SRS coil assembly. Another small connector is used to substitute for the load of the driver air bag assembly and the SRS coil assembly when it is connected at the base of the column to the SRS wiring harness. The third small connector is used to substitute for the load of the passenger air bag assembly when connected to the passenger air bag assembly harness connector.

By substituting the resistance of the load tool when called for, a determination can be made as to whether an inflator circuit component is causing system malfunction and which component is causing the malfunction. The load tool should be used only when specifically called for in the diagnostic procedures.

J–39200 DVM

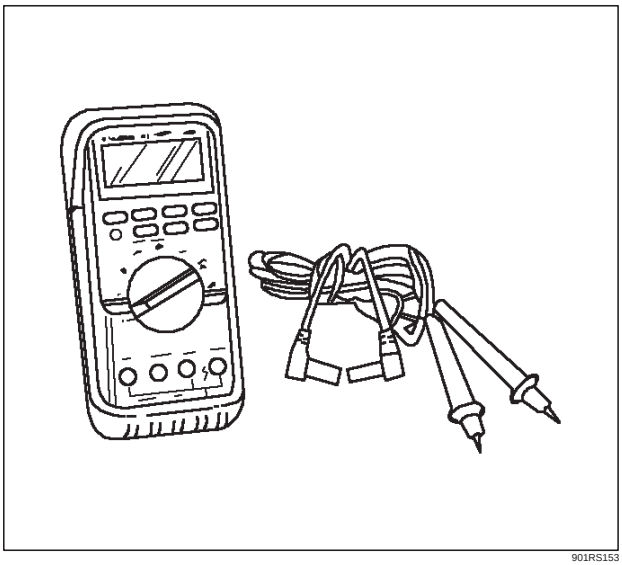

901RS153

The J–39200 DVM is the preferred DVM for use in SRS diagnosis and repair. However, J–34029—A may be used if J–39200 is not available. No other DVMs are approved for SRS diagnosis and repair.

Scan Tool

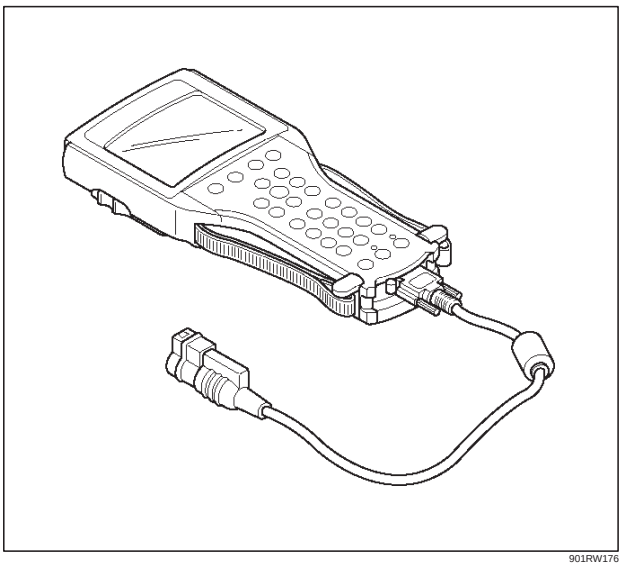

901RW176

The Tech 2 is used to read and clear SRS Diagnostic Trouble Codes (DTCs). Refer to the Tech 2 Operators, Manual for specific information on how to use the Tech 2.

Downloaded from www.Manualslib.com manuals search engine

J–35616—A Connector Test Adapter Kit

901RS151

The J–35616–A Connector Test Adapter Kit must be used whenever a diagnostic procedure requests checking or probing a terminal. Using the appropriate adapter will ensure that no damage to the terminal will occur from the DVM prove, such as spreading or bending. The adapter will also give an idea of whether contact tension is sufficient, helping to find an open or intermittent open due to poor terminal contact.

J–42986 SRS Deployment Tool

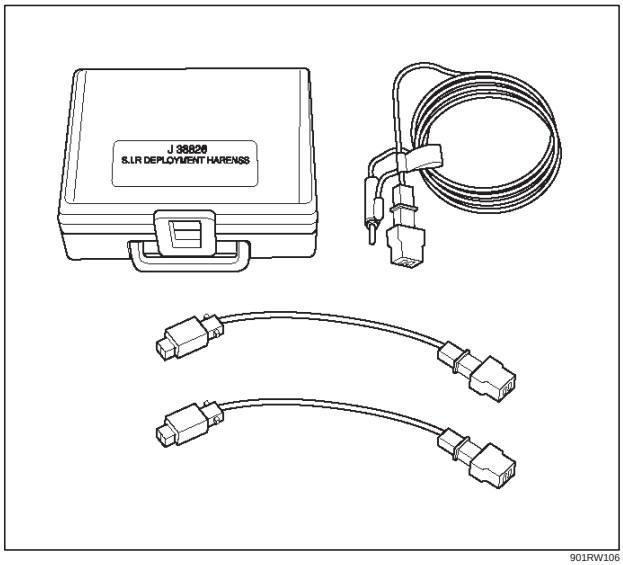

901RW106

The J–42986 SRS Deployment Tool must be used for deployment of the undeployed air bag.

J–41497 SRS Deployment Fixture

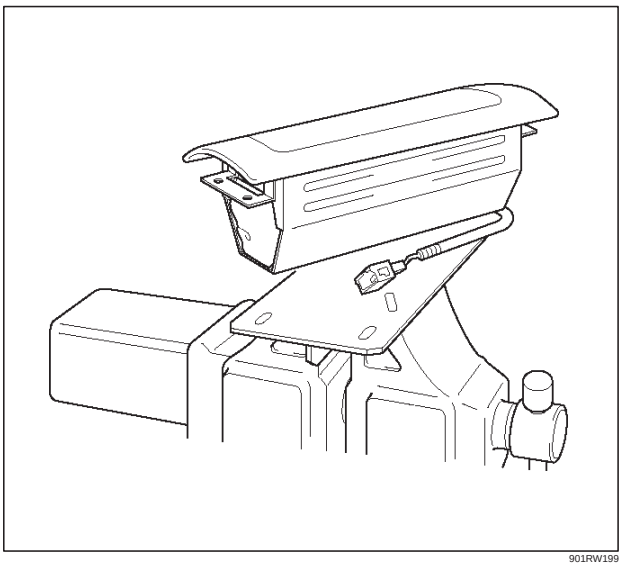

901RW199

The J–41497 SRS Deployment Fixture must be used for deployment of the undeployed passenger side air bag.

J–42987 SRS Adapter for Load Tool.

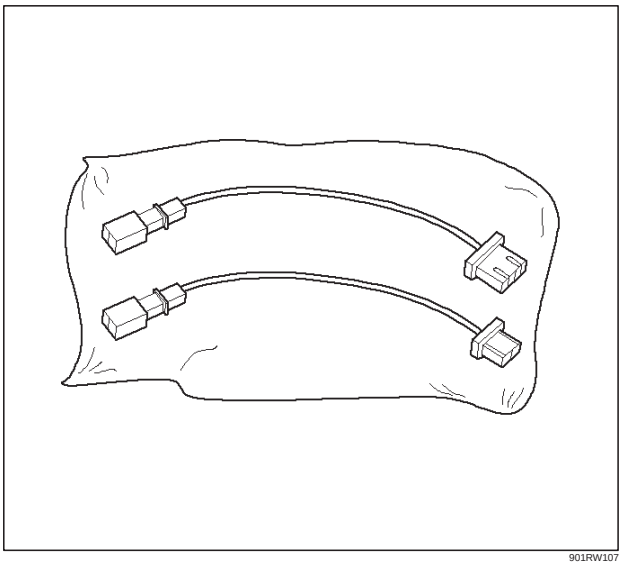

901RW107

The J–42987 SRS Adapter for Load Tool must be used with J–41433 SRS Driver/Passenger Load Tool.

Downloaded from www.Manualslib.com manuals search engine

Tech 2 Scan Tool

From 98 MY, Isuzu dealer service departments are recommended to use Tech 2. Please refer to Tech 2 scan tool user guide.

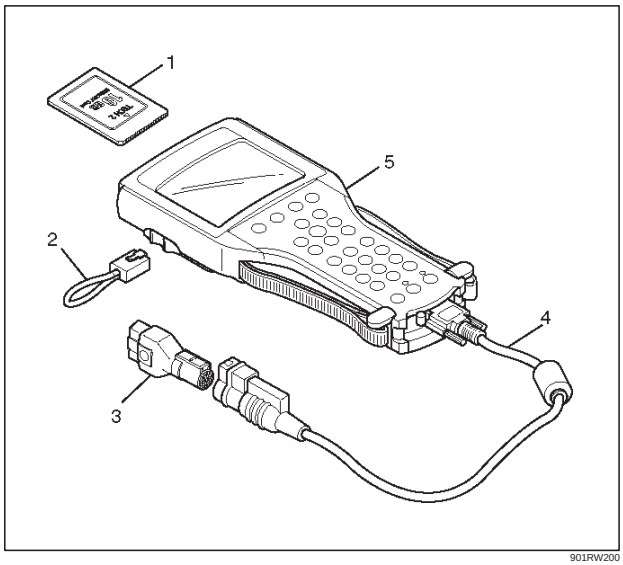

901RW200

Legend

(1) PCMCIA Card
(2) RS 232 Loop Back Connector
(3) SAE 16/19 Adaptor
(4) DLC Cable
(5) Tech–2

Getting Started

- Before operating the Isuzu PCMCIA card with the Tech 2, the following steps must be performed:

1. Insert the Isuzu 98 System PCMCIA card (1) into the Tech 2 (5).
2. Connect the SAE 16/19 adapter (3) to the DLC cable (4).
3. Connect the DLC cable to the Tech 2 (5)
4. Make sure of the vehicle ignition is off.
5. Connect the Tech 2 SAE 16/19 adapter to the vehicle ALDL/DLC connector.

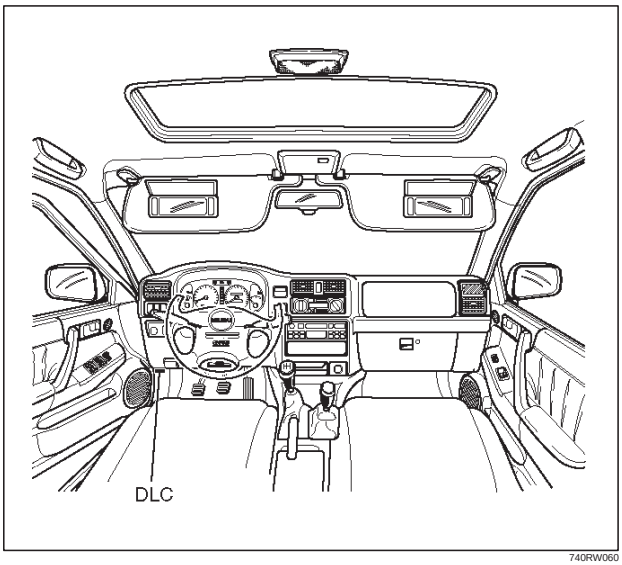

740RW060

6. Turn on the vehicle ignition switch.
7. Verify the Tech 2 power up display.

060RW009

NOTE: The RS232 Loop back connector is only used to diagnosis Tech 2. Refer to user guide of the Tech 2.

Downloaded from www.Manualslib.com manuals search engine

Operating Procedure

The power up screen is displayed when you power up the tester with the Isuzu systems PCMCIA card. Follow the operating procedure below.

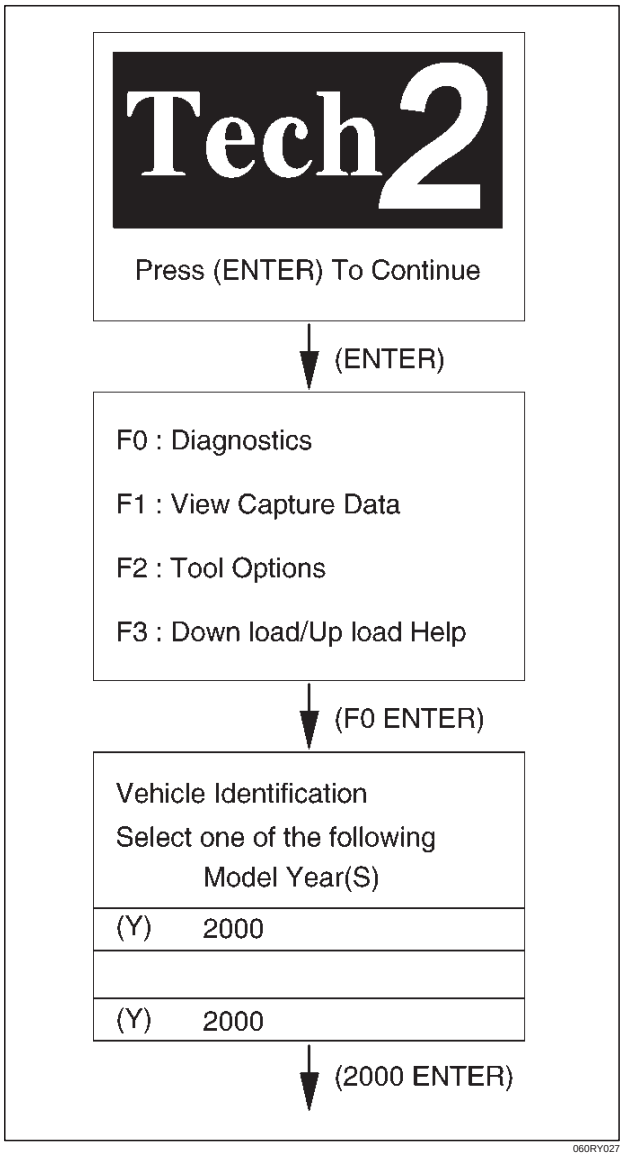

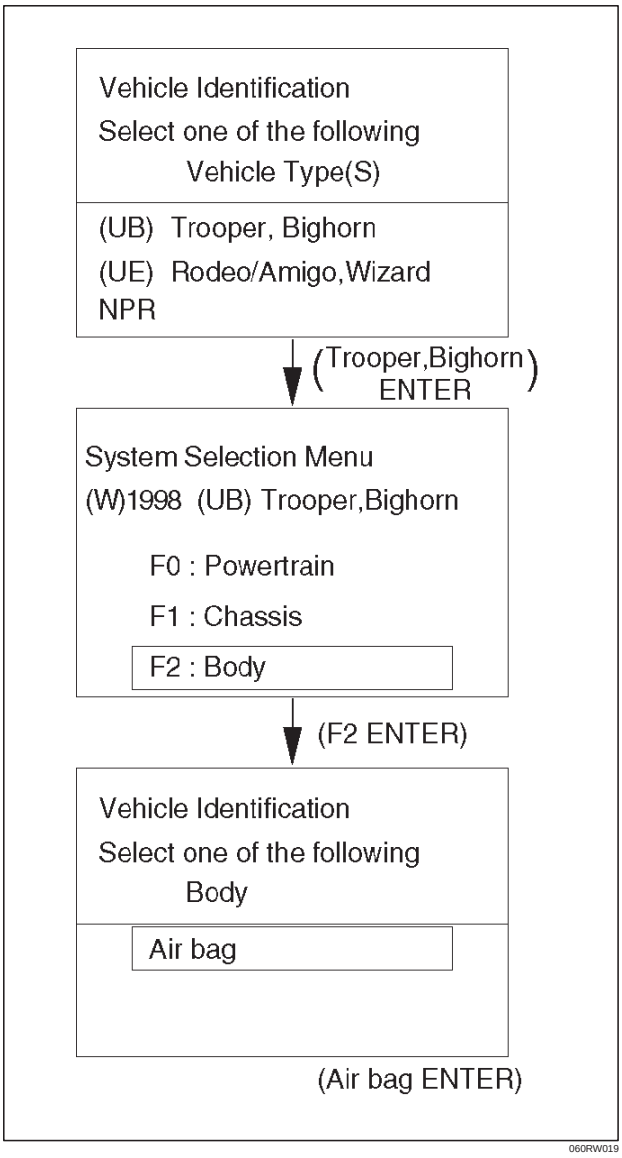

Downloaded from www.Manualslib.com manuals search engine

Service Precautions for SRS Component Service

CAUTION: When fasteners are removed, always reinstall them at the same location from which they were removed. If a fastener needs to be replaced, use the correct part number fastener for that application. If the correct part number fastener is not available, a fastener of equal size and strength (or stronger) may be used. fasteners that are not reused, and those requiring thread locking compound will be called out. The correct torque value must be used when installing fasteners that require it. If the above conditions are not followed, parts or system damage could result.

WARNING: WHEN PERFORMING SERVICE ON OR AROUND SRS COMPONENTS OR SRS WIRING, FOLLOW THE PROCEDURES LISTED BELOW TO TEMPORARILY DISABLE THE SRS. FAILURE TO FOLLOW PROCEDURES COULD RESULT IN POSSIBLE AIR BAG DEPLOYMENT, PERSONAL INJURY OR OTHERWISE UNNEEDED SRS REPAIRS.

The SDM in Driver–Passenger SRS can maintain sufficient voltage to cause a deployment for up to 15 seconds after the ignition switch is turned “OFF,” the battery is disconnected, or the fuse powering the SDM is removed.

Many of the service procedures require removal of the “C–21” fuse, and disconnection of the air bag assembly from the deployment loop to avoid an accidental deployment. If the air bag assembly is disconnected from the deployment loop as noted in the “Disabling the SRS” procedure that follows, service can begin immediately without waiting for the 15 second time period to expire.

Disabling The SRS

Removal

Turn the ignition switch to “OFF” and turn the steering wheel so that the vehicle’s wheels are pointing straight ahead.

1. Remove SRS fuse “C–21” from left dash side lower fuse block or disconnect battery.
2. Disconnect yellow 2–pin connector at the base of steering column.
3. Remove glove box assembly; Refer to “Passenger air bag assembly replacement” in this section.
4. Disconnect passenger air bag assembly yellow 2–pin connector behind the glove box assembly.

CAUTION: With the “C–21” fuse removed and ignition switch “ON,” the “AIR BAG” warning lamp will be “ON.” This is normal operation and does not indicate an SRS malfunction.

Enabling The SRS

Installation

Turn ignition switch to “LOCK” and remove key.

1. Connect yellow 2–pin connector passenger air bag assembly.
2. Install glove box assembly. Refer to “Passenger Air Bag Assembly Replacement” in this section.
3. Connect yellow 2–pin connector at the base of the steering column.
4. Install “AIR BAG” fuse “C–21” to left dash side lower fuse block or connect battery.

Turn ignition switch to “ON” and verify that the “AIR BAG” warning lamp flashes seven times and then turns “OFF.” If it does not operate as described, perform the “SRS Diagnostic System Check” in this section.

Handling / Installation / Diagnosis

1. Air bag assembly should not be subjected to temperatures above 65˚C (150˚F).
2. Air bag assembly, and SDM should not be used if they have been dropped from a height of 100 centimeters (3.28 feet) or more.
3. When a SDM is replaced, it must be oriented with the arrow on the SDM pointing toward the front of the vehicle. It is very important for the SDM to be located flat on the mounting surface, parallel to the vehicle datum line. It is important that the SDM mounting surface is free of any dirt or other foreign material.
4. Do not apply power to the SRS unless all components are connected or a diagnostic chart requests it, as this will set a diagnostic trouble code.
5. The “SRS Diagnostic System Check” must be the starting point of any SRS diagnostics. The “SRS Diagnostic System Check” will verify proper “AIR BAG” warning lamp operation and will lead you to the correct chart to diagnose any SRS malfunctions. Bypassing these procedures may result in extended diagnostic time, incorrect diagnosis, and incorrect parts replacements.

Inspections Required After An Accident

CAUTION: Certain SRS components must be replaced after a frontal crash involving air bag deployment.

In all types of accidents regardless of “Air Bag” deployment, visually inspect all of the following components and replace as required:

— Driver air bag assembly
— Passenger air bag assembly
— Steering wheel
— SRS coil assembly
— Steering column
— Knee bolster and instrument panel mounting attachments
— Driver seat and belt
— Passenger seat and belt
— SDM

SDM always should be checked according to “SDM Replacement Guidelines.”

CAUTION: Refer to “SDM Replacement Guidelines” below for important information on SDM replacement in both deployment and non–deployment crashes.

Inspect SRS coil assembly wiring and steering wheel for any sign of scorching, melting, or damage due to excessive heat. If coil assembly wire or steering wheel is

Downloaded from www.Manualslib.com manuals search engine

damaged, replace them. The steering column and wheel must be dimensionally checked to determine if they are damaged. Refer to steering wheel of in this manual.
Never use SRS parts from another vehicle. This does not include remanufactured parts purchased from an authorized Isuzu Retailer; they may be used for SRS repairs.
Do not attempt to repair the SDM, the SRS harness, the SRS coil assembly, the air bag assembly, the steering wheel, or the steering column. Service of these items is replacement only. Verify replacement part numbers.

CAUTION: Proper operation of the SDM and supplemental restraint system (SRS) requires that any repairs to the vehicle structure return it to its original production configuration.

SRS Connectors

CAUTION: The special yellow color connectors are used for supplemental restraint system-air bag circuit. When removing the oable harnese, do not pull the cables otherwile, cable disconnection may occur. When connect the SRS connector, insert the connector completely. Imperfect locking may cause malfunction of SRS circuit.

Removal

To remove the connector, hold the cover insulator (1) and pull it. The cover insulator slides and lock will be released. Do not hold the socket insulator (2).

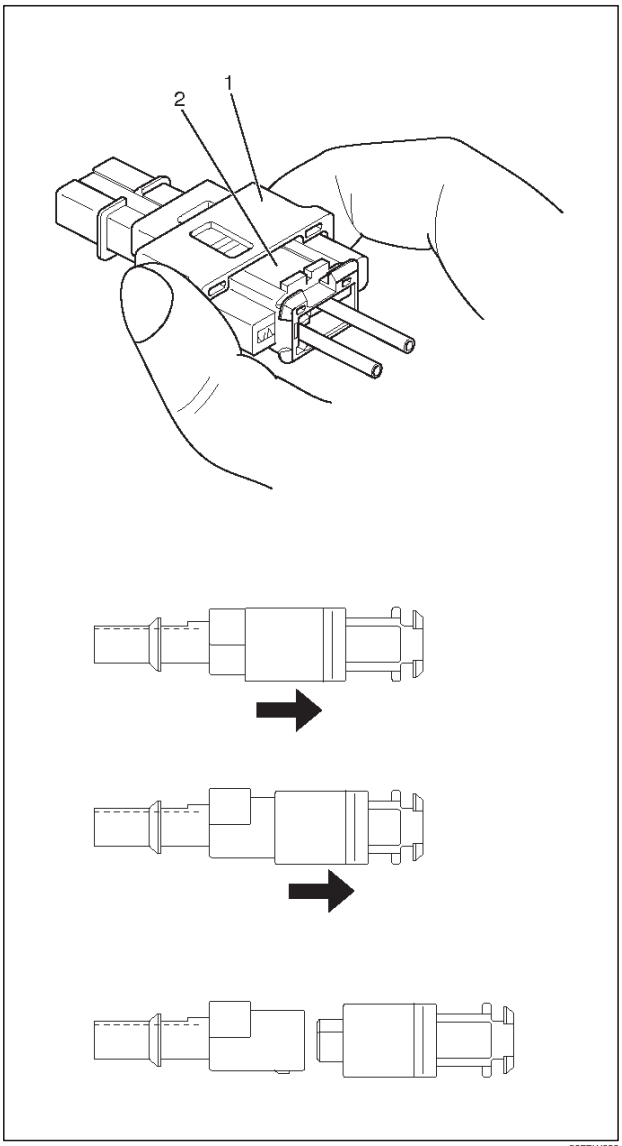

827RW028

Downloaded from www.Manualslib.com manuals search engine

Installation

To install the connector, hold the socket insulator (1) and insert it. The cover insulator slides and connector will be locked. Do not hold the cover insulator (2).

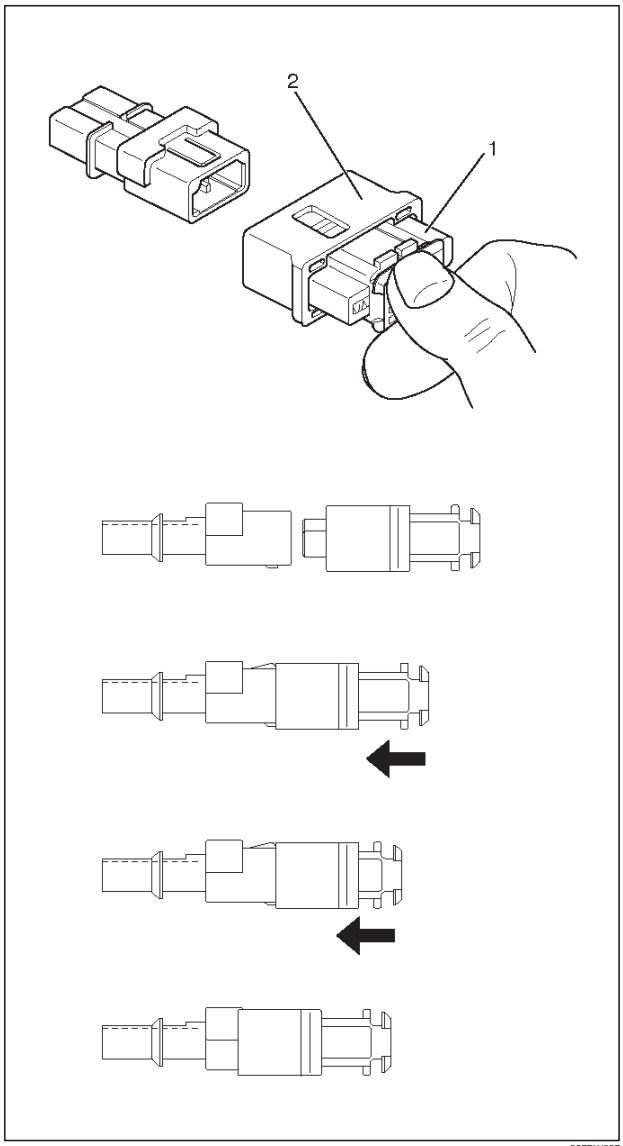

827RW027

Downloaded from www.Manualslib.com manuals search engine

Sensing And Diagnostic Module (SDM)

Service Precautions

WARNING: DURING SERVICE PROCEDURES, BE VERY CAREFUL WHEN HANDLING SDM. NEVER STRIKE OR JAR SDM. UNDER SOME CIRCUMSTANCES, IT COULD CAUSE DEPLOYMENT AND RESULT IN PERSONAL INJURY OR IMPROPER OPERATION OF THE SUPPLEMENTAL RESTRAINT SYSTEM (SRS) . SDM MOUNTING BRACKET BOLTS MUST BE CAREFULLY TORQUED TO ASSURE PROPER OPERATION. NEVER POWER UP THE SRS WHEN SDM IS NOT RIGIDLY ATTACHED TO THE VEHICLE. THE SDM COULD BE ACTIVATED WHEN POWERED WHILE NOT RIGIDLY ATTACHED TO THE VEHICLE WHICH COULD CAUSE DEPLOYMENT AND RESULT IN PERSONAL INJURY.

WARNING: PROPER OPERATION OF THE SENSING AND DIAGNOSTIC MODULE (SDM) REQUIRES THE SDM TO BE RIGIDLY ATTACHED TO THE VEHICLE STRUCTURE AND THAT THE ARROW ON THE SENSOR BE POINTING TOWARD THE FRONT OF THE VEHICLE.

SDM is specifically calibrated and is keyed to the SDM location SRS wiring harness. Caution should be used to ensure proper location of the SDM. The keying of the SDM to its location and wiring harness connectors should never be modified in the field.

Removal

1. Disable the SRS (Refer to “Disabling the SRS” in this section).
2. Remove the transmission knob (for M/T) and transfer lever knob.
3. Remove the front console assembly and disconnect wiring harness connector.
4. Pull CPA (Connector Position Assurance) out and push connector lock down to disconnect the SDM harness connector.
5. Remove the three SDM fixing bolts and remove SDM.

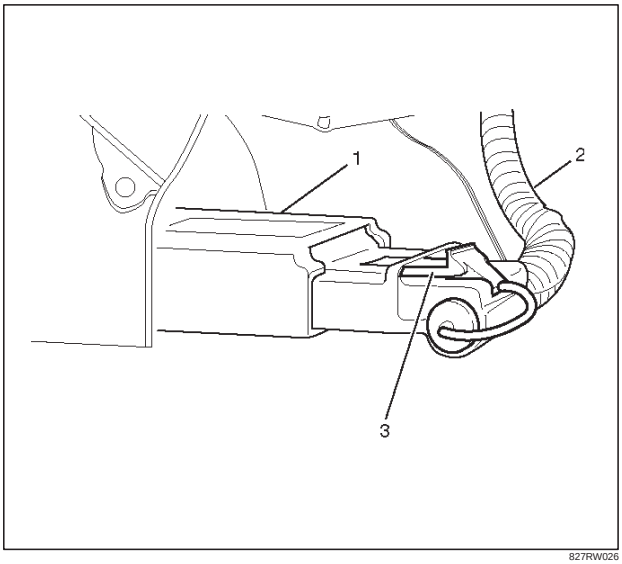

827RW026

Legend

(1) SDM
(2) SRS Harness
(3) Connector Position Assurance

Installation

1. Install the SDM on bracket and fixing bolts and tighten the fixing bolts to the specified torque.

   Torque: 10 N·m (87 lb in)
2. Connect the SDM harness connector and after that, put CPA into connector.
3. Install the front console.
4. Install the transmission knob (for M/T) and transfer lever knob.

Downloaded from www.Manualslib.com manuals search engine

5. Enable the SRS (Refer to “Enabling the SRS” in this section).

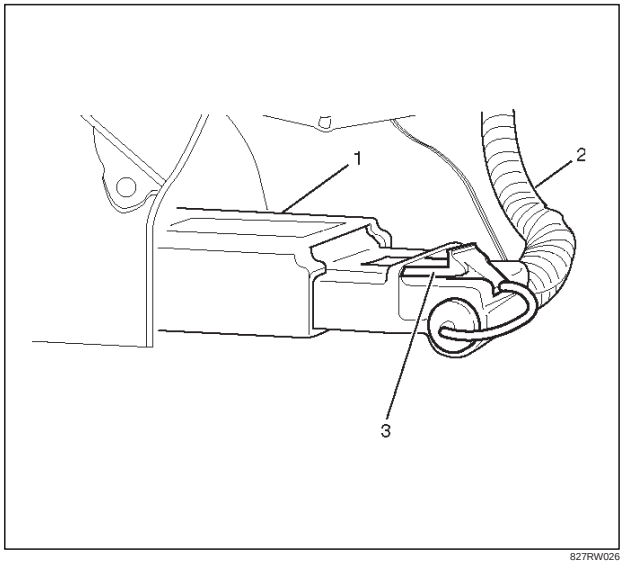

827RW026

Legend

(1) SDM
(2) SRS Harness
(3) Connector Position Assurance

Downloaded from www.Manualslib.com manuals search engine

Driver Air Bag Assembly

Service Precautions

WARNING: SAFETY PRECAUTIONS MUST BE FOLLOWED WHEN HANDLING A DEPLOYED AIR BAG ASSEMBLY. AFTER DEPLOYMENT, THE AIR BAG ASSEMBLY SURFACE MAY CONTAIN A SMALL AMOUNT OF SODIUM HYDROXIDE, A BY–PRODUCT OF THE DEPLOYMENT REACTION, THAT IS IRRITATING TO THE SKIN AND EYES. MOST OF THE POWER ON THE AIR BAG ASSEMBLY IS HARMLESS. AS A PRECAUTION, WEAR GLOVES AND SAFETY GLASSES WHEN HANDLING A DEPLOYED AIR BAG ASSEMBLY, AND WASH YOUR HANDS WITH MILD SOAP AND WATER AFTERWARDS.

WARNING: WHEN CARRYING A LIVE AIR BAG ASSEMBLY, MAKE SURE THE BAG AND TRIM COVER ARE POINTED AWAY FROM YOU. NEVER CARRY AIR BAG ASSEMBLY BY THE WIRES OR CONNECTOR ON THE UNDERSIDE OF MODULE. IN THE CASE OF AN ACCIDENTAL DEPLOYMENT, THE BAG WILL THEN DEPLOY WITH MINIMAL CHANCE OF INJURY. WHEN PLACING ALIVE AIR BAG ASSEMBLY ON A BENCH OR OTHER SURFACE, ALWAYS FACE BAG AND TRIM COVER UP, AWAY FROM THE SURFACE. NEVER REST A STEERING COLUMN ASSEMBLY ON THE STEERING WHEEL WITH THE AIR BAG ASSEMBLY FACE DOWN AND COLUMN VERTICAL. THIS IS NECESSARY SO THAT A FREE SPACE IS PROVIDED TO ALLOW THE AIR BAG ASSEMBLY TO EXPAND IN THE UNLIKELY EVENT OF ACCIDENTAL DEPLOYMENT. OTHERWISE, PERSONAL INJURY COULD RESULT.

NOTE: In the event deployment has occurred, inspect coil assembly wire for any signs of scorching, melting or any other damage due to excessive heat. If the coil has been damaged, replace it.

Removal

1. Disable the SRS (Refer to “Disabling the SRS” in this section).
2. Loosen the air bag assembly fixing bolts from behind the steering wheel assembly using a TORX® driver or equivalent until the air bag assembly can be released from steering wheel.

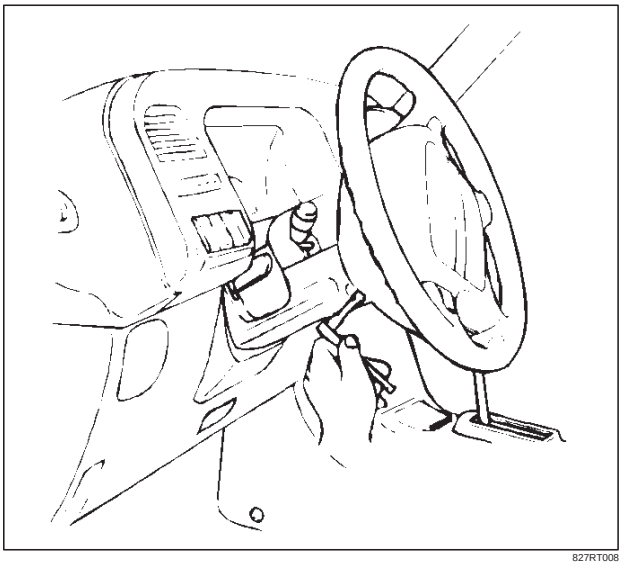

827RT008

3. Disconnect the yellow 2–pin connector located behind the air bag assembly and remove air bag assembly. Refer to “SRS Connectors” in this section for removal and installation.

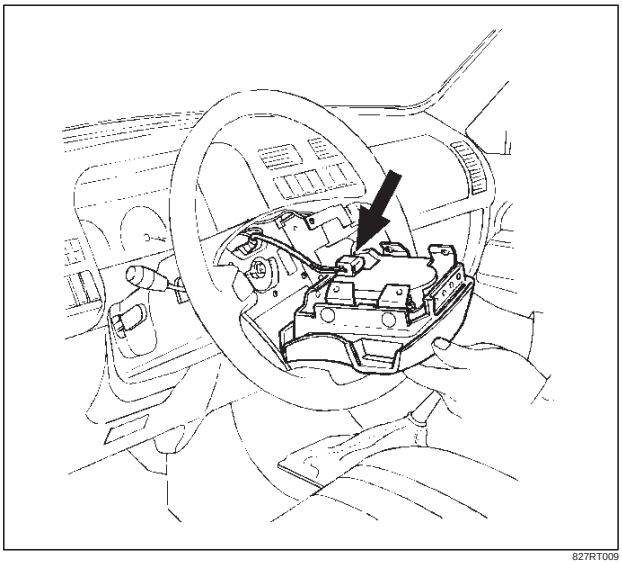

827RT009

Downloaded from www.Manualslib.com manuals search engine

Installation

1. Connect air bag to wiring harness connector.

NOTE: Pass the lead wire through the tabs on the plastic cover (wire protector) of air bag to prevent lead wire from being pinched.

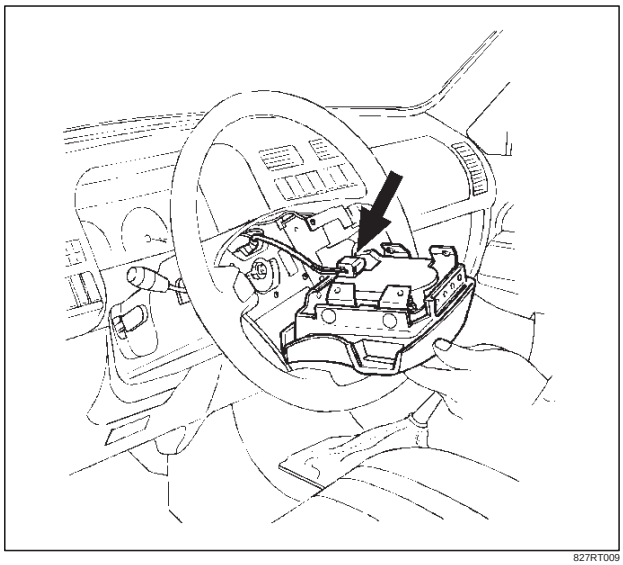

827RT009

2. Install air bag into steering wheel and tighten bolts to specified sequence as shown in figure.

   Torque: 8 N·m (69 lb in)

CAUTION: Never use the air bag assembly from another vehicle and difference model year air bag assembly.

The air bag assembly has identification colors on the bar code label from ’00 model as follows.

Yellow color for driver air bag assembly.

White color for passenger air bag assembly.

Use only new air bag assembly proper to the Trooper which is being repaired.

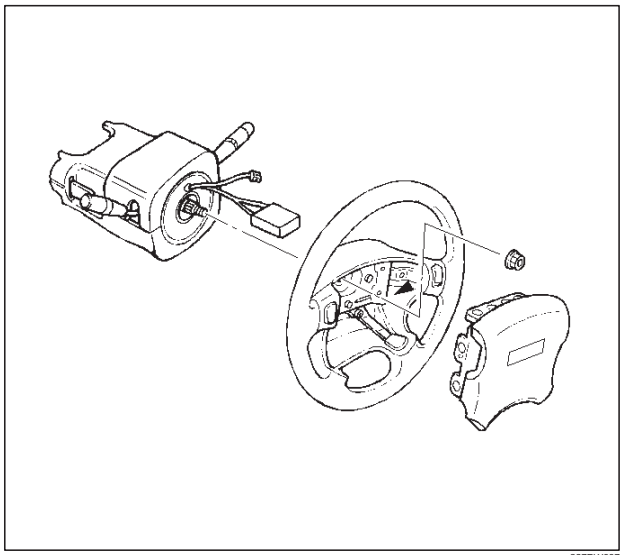

827RW007

3. Enable the SRS (Refer to “Enabling the SRS” in this section).

Downloaded from www.Manualslib.com manuals search engine

Steering Wheel

Service Precautions

WARNING: SAFETY PRECAUTIONS MUST BE FOLLOWED WHEN HANDLING A DEPLOYED AIR BAG ASSEMBLY. AFTER DEPLOYMENT, THE AIR BAG ASSEMBLY SURFACE MAY CONTAIN A SMALL AMOUNT OF SODIUM HYDROXIDE, A BY–PRODUCT OF THE DEPLOYMENT REACTION, THAT IS IRRITATING TO THE SKIN AND EYES. MOST OF THE POWER ON THE AIR BAG ASSEMBLY IS HARMLESS. AS A PRECAUTION, WEAR GLOVES AND SAFETY GLASSES WHEN HANDLING A DEPLOYED AIR BAG ASSEMBLY, AND WASH YOUR HANDS WITH MILD SOAP AND WATER AFTERWARDS.

WARNING: WHEN CARRYING A LIVE AIR BAG ASSEMBLY, MAKE SURE THE BAG AND TRIM COVER ARE POINTED AWAY FROM YOU. NEVER CARRY AIR BAG ASSEMBLY BY THE WIRES OR CONNECTOR ON THE UNDERSIDE OF MODULE. IN THE CASE OF AN ACCIDENTAL DEPLOYMENT, THE BAG WILL THEN DEPLOY WITH MINIMAL CHANCE OF INJURY. WHEN PLACING ALIVE AIR BAG ASSEMBLY ON A BENCH OR OTHER SURFACE, ALWAYS FACE BAG AND RIM COVER UP, AWAY FROM THE SURFACE. NEVER REST A STEERING COLUMN ASSEMBLY ON THE STEERING WHEEL WITH THE AIR BAG ASSEMBLY FACE DOWN AND COLUMN VERTICAL. THIS IS NECESSARY SO THAT A FREE SPACE IS PROVIDED TO ALLOW THE AIR BAG ASSEMBLY TO EXPAND IN THE UNLIKELY EVENT OF ACCIDENTAL DEPLOYMENT. OTHERWISE, PERSONAL INJURY COULD RESULT.

NOTE: In the event deployment has occurred, inspect coil assembly wire for any signs of scorching, melting or any other damage due to excessive heat. If the coil has been damaged, replace it.

Removal

1. Disable the SRS (Refer to “Disabling the SRS” in this section).
2. Loosen the air bag assembly fixing bolts from behind the steering wheel assembly using a TORX® driver or equivalent until the air bag assembly can be released from steering wheel.

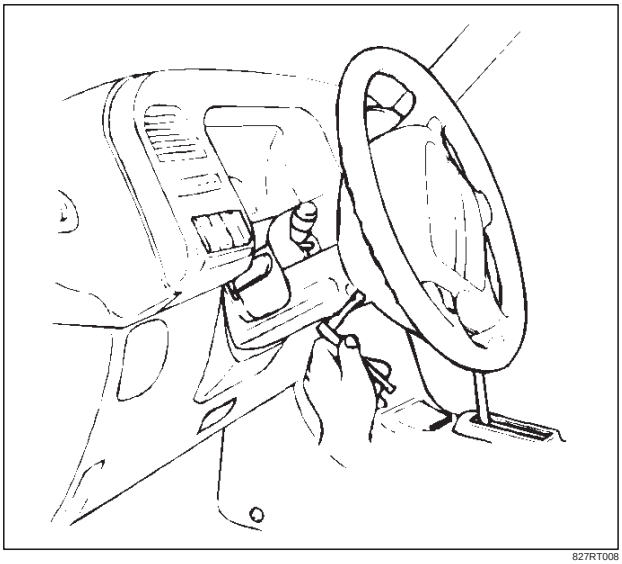

827RT008

3. Disconnect the yellow 2–pin connector located behind the air bag assembly and remove air bag assembly.Refer to “SRS Connectors” in this section for removal and installation.
4. Disconnect horn lead.

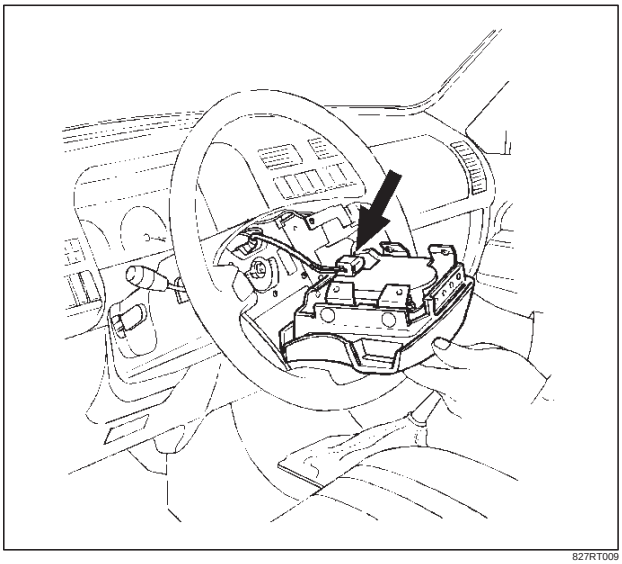

827RT009

5. Remove steering wheel attachment nut.

Downloaded from www.Manualslib.com manuals search engine

6. Apply a setting mark across the steering wheel and shaft so parts can be reassembled in their original position.

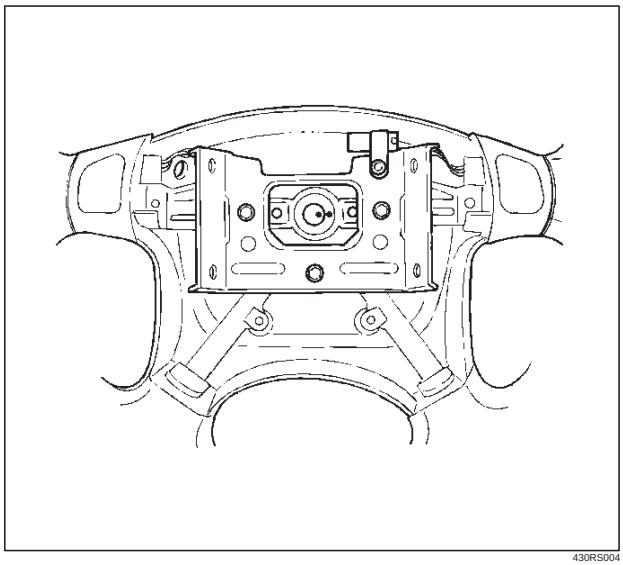

430RS004

7. Move the tires to the straight ahead position before removing the steering wheel. Install steering wheel puller onto steering wheel and remove steering wheel with J–29752.

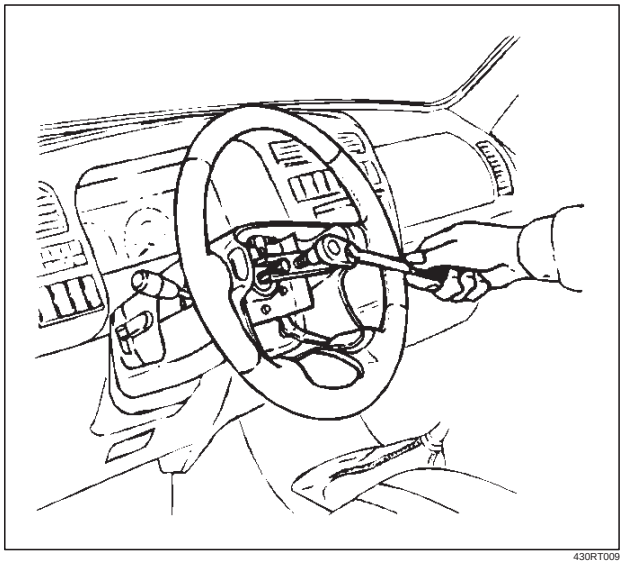

430RT009

8. Feed wiring through the wheel and remove wheel.

CAUTION: Never apply force to the steering wheel in direction of the shaft by using a hammer or other impact tools in an attempt to remove the steering wheel. The steering shaft is designed as an energy absorbing unit.

Installation

1. Install the steering wheel and align the setting marks.

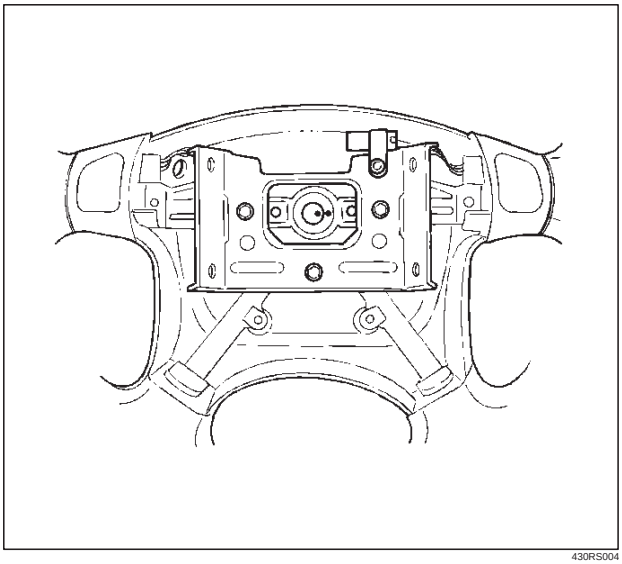

430RS004

2. Tighten the steering wheel fixing nut to the specified torque.

Torque : 34 N · m (25 lb·ft)

3. Connect horn lead.
4. Connect air bag to wiring harness connector.

NOTE: Pass the lead wire through the tabs on the plastic cover (wire protector) of air bag to prevent lead wire from being pinched.

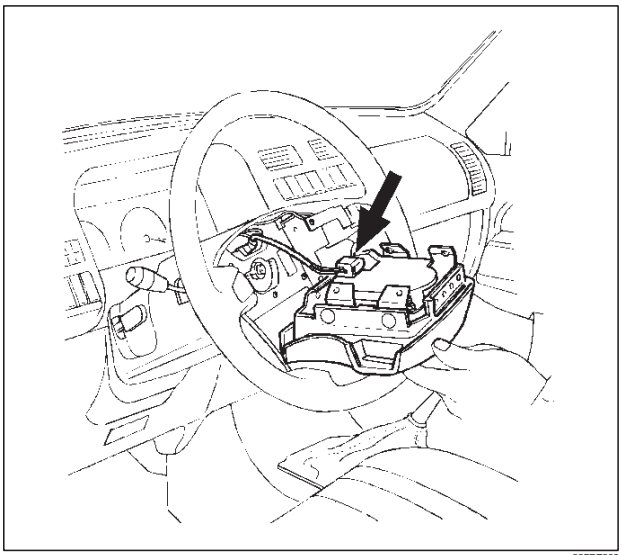

827RT009

Downloaded from www.Manualslib.com manuals search engine

5. Install air bag into steering wheel and tighten bolts to specified sequence as show in figure.

Torque: 8 N·m (69 lb in)

CAUTION: Never use the air bag assembly from another vehicle and difference model year air bag assembly.

The air bag assembly has identification colors on the bar code label from ’00 model as follows.

Yellow color for driver air bag assembly.

White color for passenger air bag assembly.

Use only new air bag assembly proper to the Trooper which is being repaired.

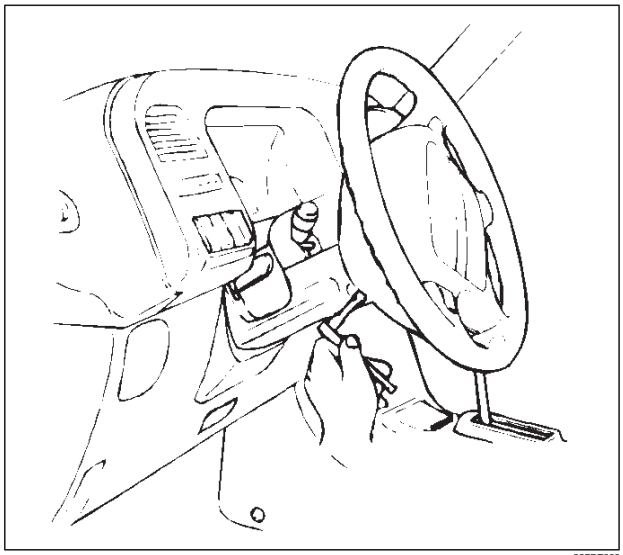

827RT008

6. Enable the SRS (Refer to “Enabling the SRS” in this section).

Downloaded from www.Manualslib.com manuals search engine

SRS Coil Assembly

Service Precautions

WARNING: SAFETY PRECAUTIONS MUST BE FOLLOWED WHEN HANDLING A DEPLOYED AIR BAG ASSEMBLY. AFTER DEPLOYMENT, THE AIR BAG ASSEMBLY SURFACE MAY CONTAIN A SMALL AMOUNT OF SODIUM HYDROXIDE, A BY–PRODUCT OF THE DEPLOYMENT REACTION, THAT IS IRRITATING TO THE SKIN AND EYES. MOST OF THE POWER ON THE AIR BAG ASSEMBLY IS HARMLESS. AS A PRECAUTION, WEAR GLOVES AND SAFETY GLASSES WHEN HANDLING A DEPLOYED AIR BAG ASSEMBLY, AND WASH YOUR HANDS WITH MILD SOAP AND WATER AFTERWARDS.

WARNING: WHEN CARRYING A LIVE AIR BAG ASSEMBLY, MAKE SURE THE BAG AND TRIM COVER ARE POINTED AWAY FROM YOU. NEVER CARRY AIR BAG ASSEMBLY BY THE WIRES OR CONNECTOR ON THE UNDERSIDE OF MODULE. IN THE CASE OF AN ACCIDENTAL DEPLOYMENT, THE BAG WILL THEN DEPLOY WITH MINIMAL CHANCE OF INJURY. WHEN PLACING ALIVE AIR BAG ASSEMBLY ON A BENCH OR OTHER SURFACE, ALWAYS FACE BAG AND RIM COVER UP, AWAY FROM THE SURFACE. NEVER REST A STEERING COLUMN ASSEMBLY ON THE STEERING WHEEL WITH THE AIR BAG ASSEMBLY FACE DOWN AND COLUMN VERTICAL. THIS IS NECESSARY SO THAT A FREE SPACE IS PROVIDED TO ALLOW THE AIR BAG ASSEMBLY TO EXPAND IN THE UNLIKELY EVENT OF ACCIDENTAL DEPLOYMENT. OTHERWISE, PERSONAL INJURY COULD RESULT.

NOTE: In the event deployment has occurred, inspect coil assembly wire for any signs of scorching, melting or any other damage due to excessive heat. If the coil has been damaged, replace it.

Removal

1. Disable the SRS (Refer to “Disabling the SRS” in this section).
2. Loosen the air bag assembly fixing bolts from behind the steering wheel assembly using a TORX® driver or equivalent until the air bag assembly can be released from steering wheel.

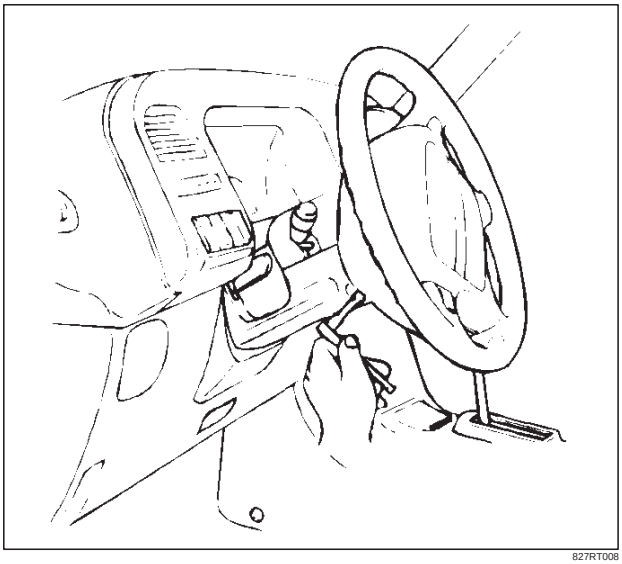

827RT008

3. Disconnect the yellow 2–pin connector located behind the air bag assembly and remove air bag assembly.Refer to “SRS Connectors” in this section for removal and installation.
4. Disconnect horn lead connector.

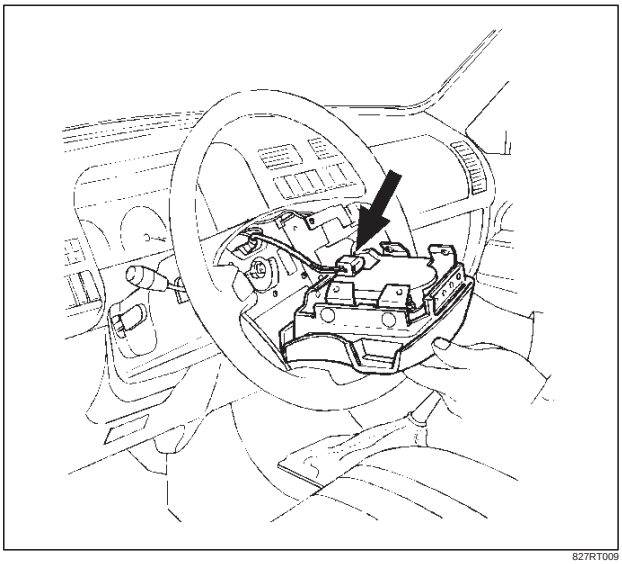

827RT009

Downloaded from www.Manualslib.com manuals search engine

5. Remove the steering wheel attachment nut.
6. Apply a setting mark across the steering wheel and shaft so parts can be reassembled in their original position.

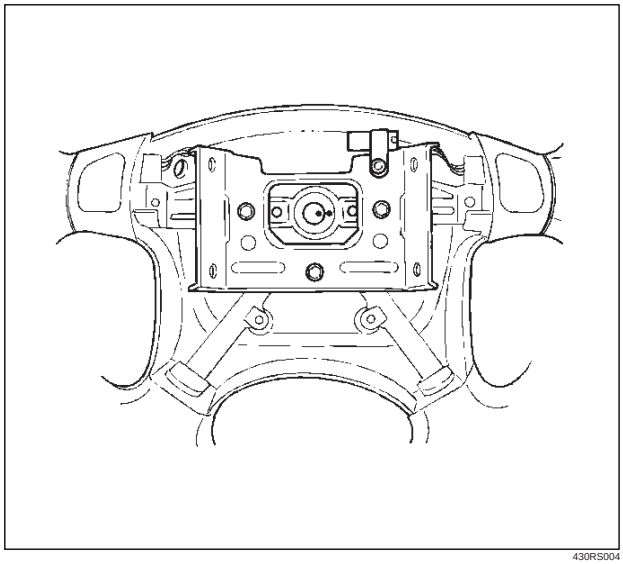

430RS004

7. Move the tires to the straight ahead position before removing the steering wheel and remove wheel with J–29752.

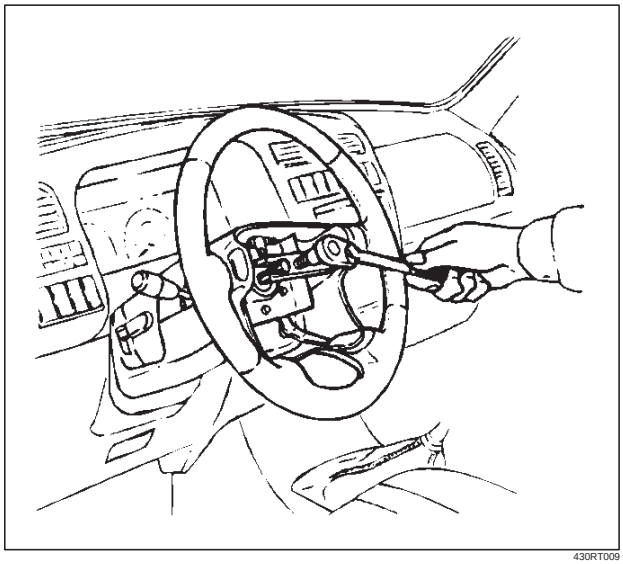

430RT009

8. Feed wiring though the wheel and remove wheel.
9. Remove the steering lower cover and engine hood opening lever.
10. Remove the driver knee bolster assembly.
11. Remove the steering column cover.
12. Remove air conditioning lower duct.
13. Disconnect the 2–pin wiring harness connectors located at the base of steering column.

CAUTION: Never apply force to the steering wheel in the direction of the shaft by using a hammer or other impact tools in an attempt to remove the steering wheel. The steering shaft is designed as an energy absorbing unit.

14. Remove the combination switch assembly with SRS coil.

NOTE: SRS coil is a part of combination switch assembly, which cannot be replaced separately. Therefore, be sure not to remove the SRS coil from the combination switch assembly.

Installation

1. Install the combination switch assembly with SRS coil.
2. Turn the SRS coil counterclockwise to full, return about 3 turns and align the neutral mark (1).

CAUTION: When turning the SRS coil counterclockwise to full, stop turning if resistance is felt. Forced further turning may damage the cable in the SRS coil.

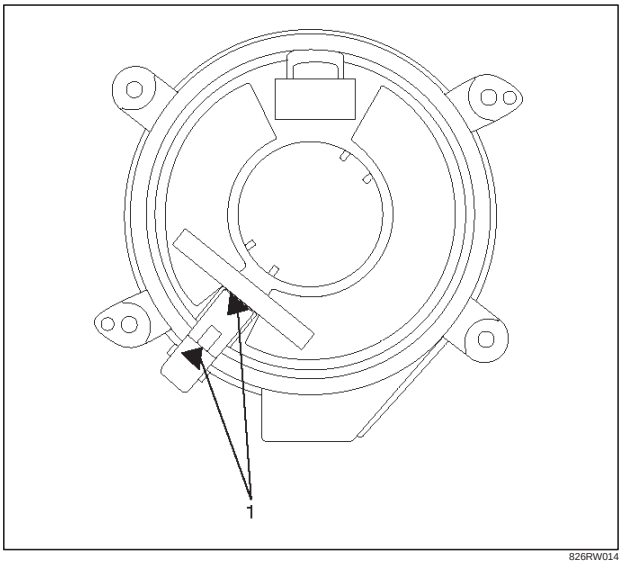

826RW014

3. Connect the wiring harness connectors located at the base of steering column.
4. Install the air conditioning lower duct.
5. Install the steering column cover.

Downloaded from www.Manualslib.com manuals search engine

CAUTION: When installing the steering column cover, be sure to wire (through each harness) as illustrated so that the harness starter switch, combination switch and SRS coil may not catch wiring.

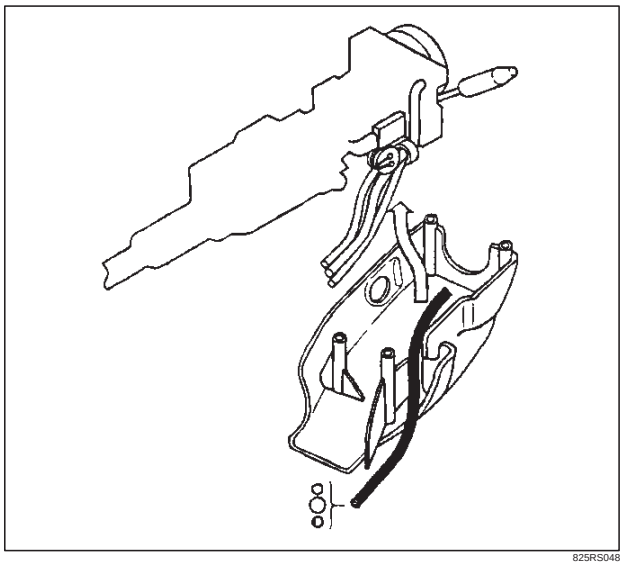

825RS048

6. Install the driver knee bolster assembly.
7. Install the steering lower cover and engine hood opening lever.
8. Install the steering wheel and align the setting marks.

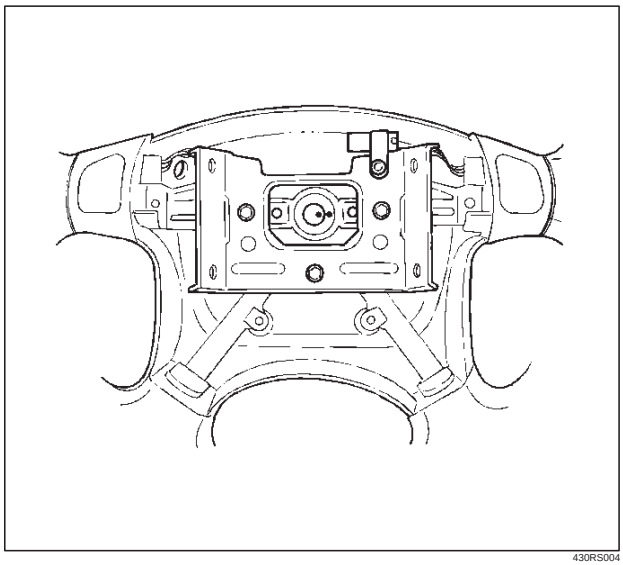

430RS004

9. Tighten the steering wheel fixing nut to the specified torque.

   Torque: 34 N·m (25 lb·ft)

10. Connect horn lead.
11. Connect air bag to wiring harness connector.

NOTE: Pass the lead wire through the tabs on the plastic cover (wire protector) of air to prevent lead wire from being pinches.

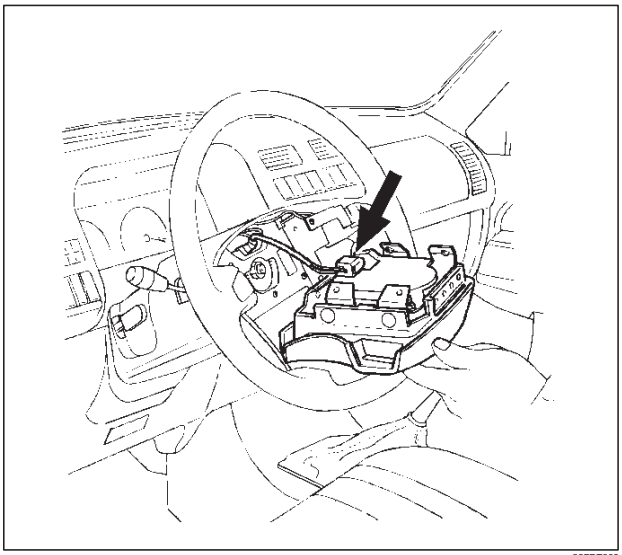

827RT009

12. Install air bag into steering wheel and tighten bolts to specified sequence as shown in figure.

    Torque: 8 N·m (69 lb in)

CAUTION: Never use the air bag assembly from another vehicle and difference model year air bag assembly.
The air bag assembly has identification colors on the bar code label from ’00 model as follows.
Yellow color for driver air bag assembly.
White color for passenger air bag assembly.
Use only new air bag assembly proper to the Trooper which is being repaired.

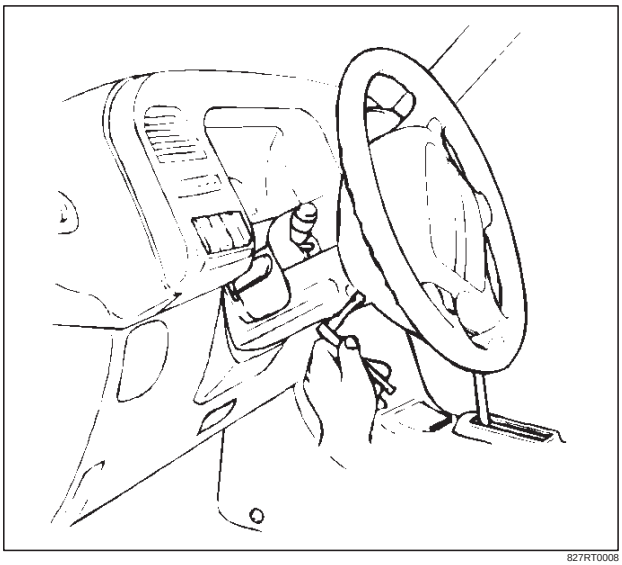

827RT0008

13. Enable the SRS (Refer to “Enabling the SRS” in this section).

Downloaded from www.Manualslib.com manuals search engine

Steering Column

Service Precautions

WARNING: SAFETY PRECAUTIONS MUST BE FOLLOWED WHEN HANDLING A DEPLOYED AIR BAG ASSEMBLY. AFTER DEPLOYMENT, THE AIR BAG ASSEMBLY SURFACE MAY CONTAIN A SMALL AMOUNT OF SODIUM HYDROXIDE, A BY–PRODUCT OF THE DEPLOYMENT REACTION, THAT IS IRRITATING TO THE SKIN AND EYES. MOST OF THE POWER ON THE AIR BAG ASSEMBLY IS HARMLESS. AS A PRECAUTION, WEAR GLOVES AND SAFETY GLASSES WHEN HANDLING A DEPLOYED AIR BAG ASSEMBLY, AND WASH YOUR HANDS WITH MILD SOAP AND WATER AFTERWARDS.

WARNING: WHEN CARRYING A LIVE AIR BAG ASSEMBLY, MAKE SURE THE BAG AND TRIM COVER ARE POINTED AWAY FROM YOU. NEVER CARRY AIR BAG ASSEMBLY BY THE WIRES OR CONNECTOR ON THE UNDERSIDE OF MODULE. IN THE CASE OF AN ACCIDENTAL DEPLOYMENT, THE BAG WILL THEN DEPLOY WITH MINIMAL CHANCE OF INJURY. WHEN PLACING ALIVE AIR BAG ASSEMBLY ON A BENCH OR OTHER SURFACE, ALWAYS FACE BAG AND RIM COVER UP, AWAY FROM THE SURFACE. NEVER REST A STEERING COLUMN ASSEMBLY ON THE STEERING WHEEL WITH THE AIR BAG ASSEMBLY FACE DOWN AND COLUMN VERTICAL. THIS IS NECESSARY SO THAT A FREE SPACE IS PROVIDED TO ALLOW THE AIR BAG ASSEMBLY TO EXPAND IN THE UNLIKELY EVENT OF ACCIDENTAL DEPLOYMENT. OTHERWISE, PERSONAL INJURY COULD RESULT.

NOTE: In the event deployment has occurred, inspect coil assembly wire for any signs of scorching, melting or any other damage due to excessive heat. If the coil has been damaged, replace it.

Removal

1. Disable the SRS (Refer to “Disabling the SRS ” in this section).
2. Loosen the air bag assembly fixing bolts from behind the steering wheel assembly using a TORX® driver or equivalent until the air bag assembly can be released from steering wheel.

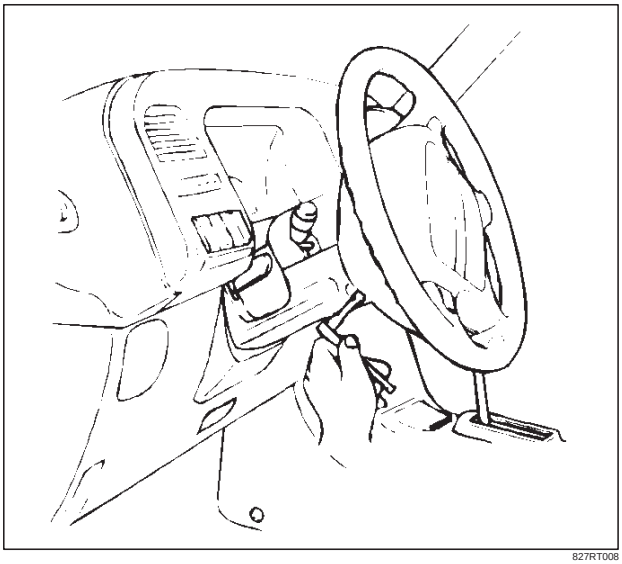

827RT008

3. Disconnect the yellow 2–pin connector located behind the air bag assembly and remove air bag assembly.Refer to “SRS Connectors” in this section for removal and installation.

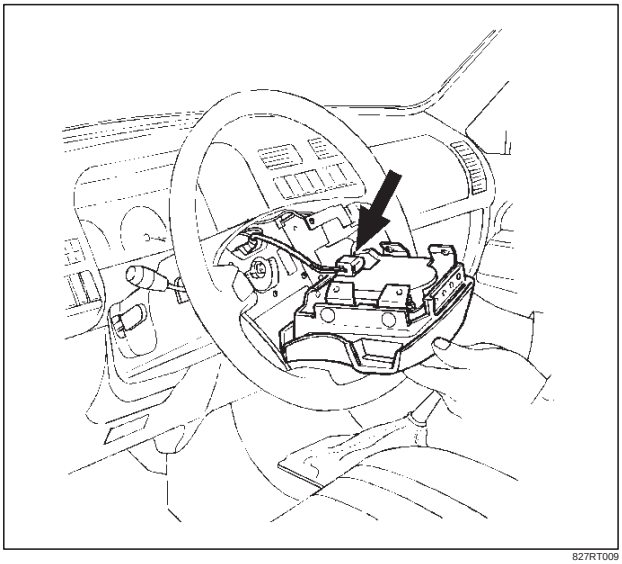

827RT009

4. Disconnect horn lead connector.
5. Remove the steering wheel attachment nut.

Downloaded from www.Manualslib.com manuals search engine

6. Apply a setting mark across the steering wheel and shaft so parts can be reassembled in their original position.

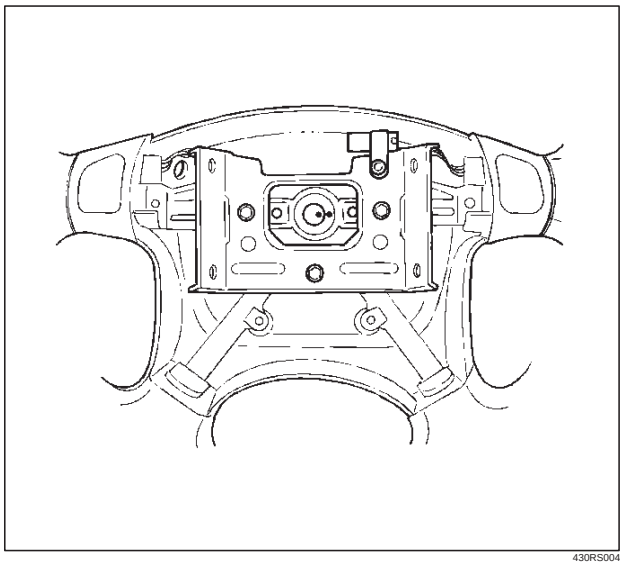

430RS004

7. Move the tires to the straight ahead position before removing the steering wheel and removing wheel with J–29752.

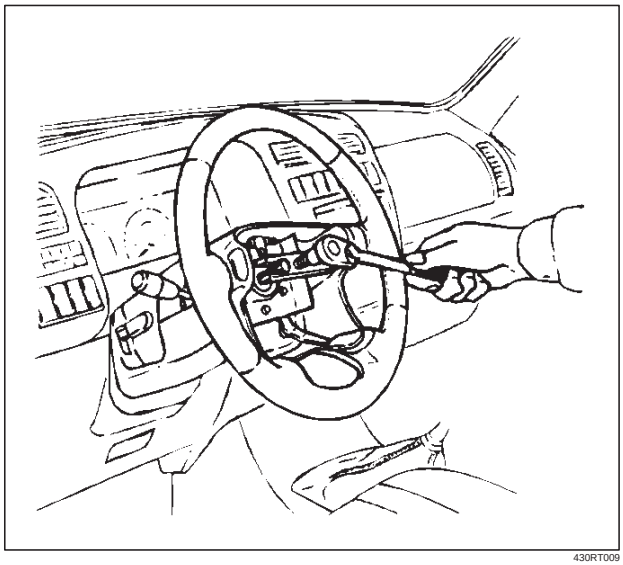

430RT009

8. Feed wiring though the wheel and remove wheel.
9. Remove the steering lower cover and engine hood opening lever.
10. Remove the driver knee bolster assembly.

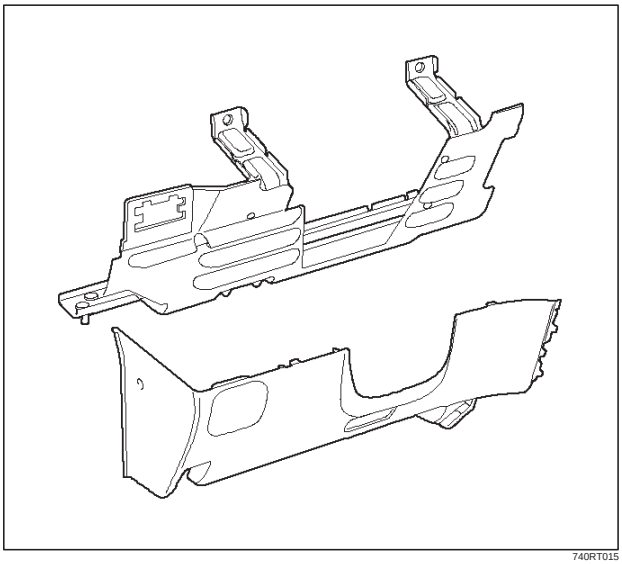

740RT015

11. Remove the steering column cover.
12. Remove air conditioning lower duct.
13. Disconnect the wiring harness connectors located at the base of steering column.

CAUTION: Never apply force to the steering wheel in direction of the shaft by using a hammer or other impact tools in an attempt to remove the steering wheel. The steering shaft is designed as an energy absorbing unit.

14. Remove the combination switch assembly with SRS coil.

NOTE: SRS coil is a part of combination switch assembly, which cannot be replaced separately. Therefore, be sure not to remove the SRS coil from the combination switch assembly.

15. Remove the snap ring.
16. Remove the cushion rubber.
17. Disconnect shift lock cable (A/T only).
18. Disconnect the starter switch harness connector located base of steering column.
19. Remove steering lock cylinder assembly.

Downloaded from www.Manualslib.com manuals search engine

20. Apply a setting mark across the universal joint and steering shaft to reassemble the parts in their original position.

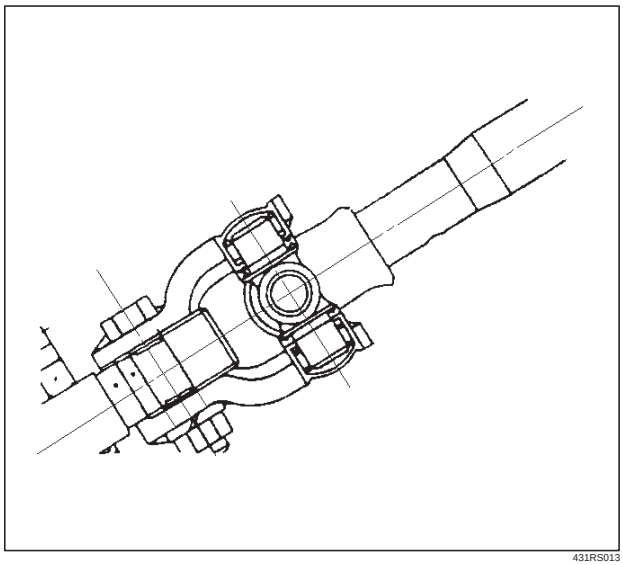

431RS013

21. Remove steering column assembly.

Installation

1. Install the steering column assembly and align the setting marks on the universal joint and steering shaft made during removal.

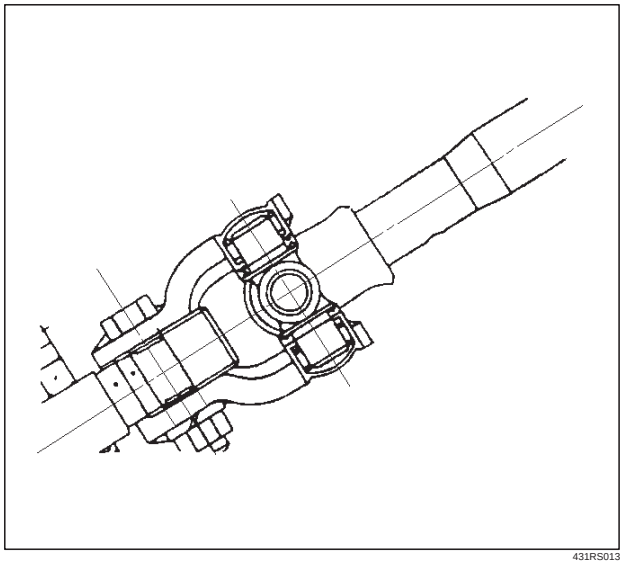

431RS013

2. Tighten the steering column fixing bolts (dash panel side) to the specified torque.

   Torque: 20 N·m (14 lb ft)

3. Tighten the steering column fixing bolts (Pedal bracket) to the specified torque.

   Torque: 20 N·m (14 lb ft)

4. Tighten the universal joint to the specified torque.

   Torque: 31 N·m (23 lb ft)

5. Install steering lock cylinder assembly.
6. Connect shift lock cable (For A/T)
7. Install cushion rubber.
8. Install snap ring.
9. Install the combination switch assembly with SRS coil.
10. Connect the wiring harness connector located on the base of steering column.
11. Turn the SRS coil counterclockwise to full, return about 3 turns and align the neutral mark (1).

CAUTION: When turning the SRS coil counterclockwise to full, stop turning if resistance is felt. Forced further turning may damage to the cable in the SRS coil.

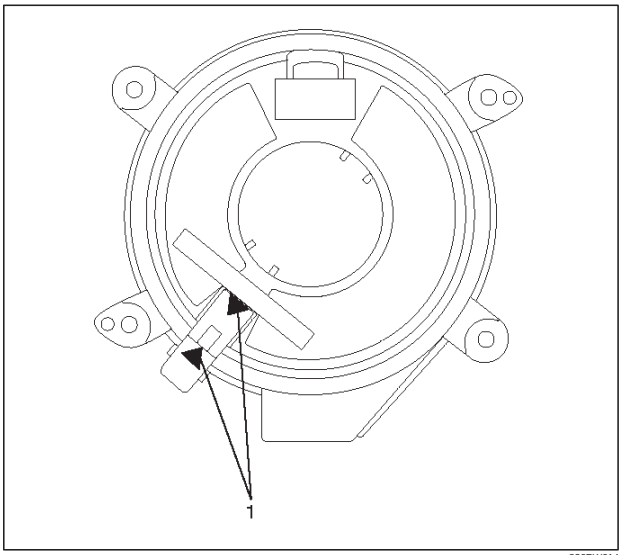

826RW014

12. Install steering column cover.

CAUTION: When installing the steering column cover, be sure to wire (through each harness) as illustrated so that the harness starter switch, combination switch and SRS coil may not catch wiring.

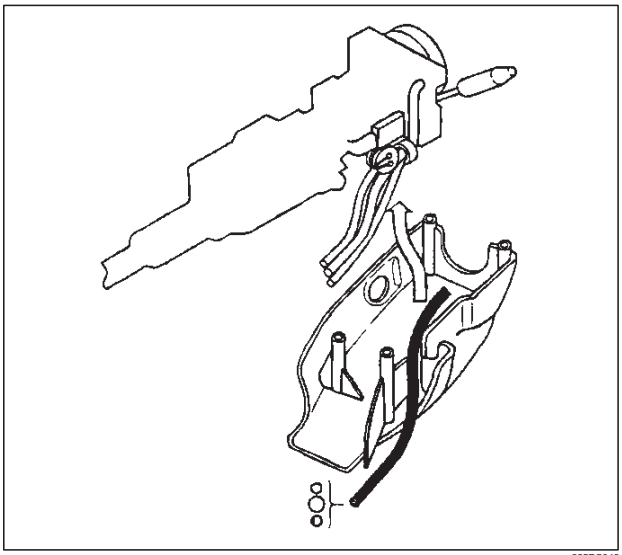

825RS048

Downloaded from www.Manualslib.com manuals search engine

13. Install the steering wheel and align the setting marks.

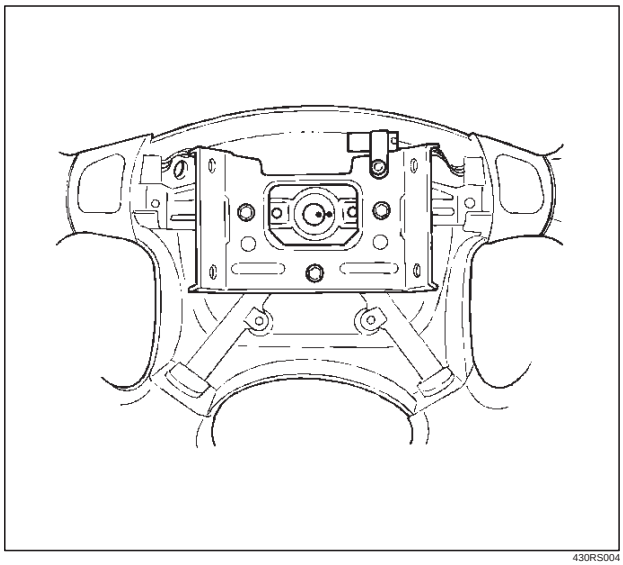

430RS004

14. Tighten the steering wheel fixing nut to the specified torque.

    Torque: 34 N·m (25 lb ft)

15. Connect horn lead.
16. Connect air bag wiring harness connector.

NOTE: Pass the lead wire through the tabs on the plastic cover (wire protector) of air bag to prevent lead wire from being pinched.

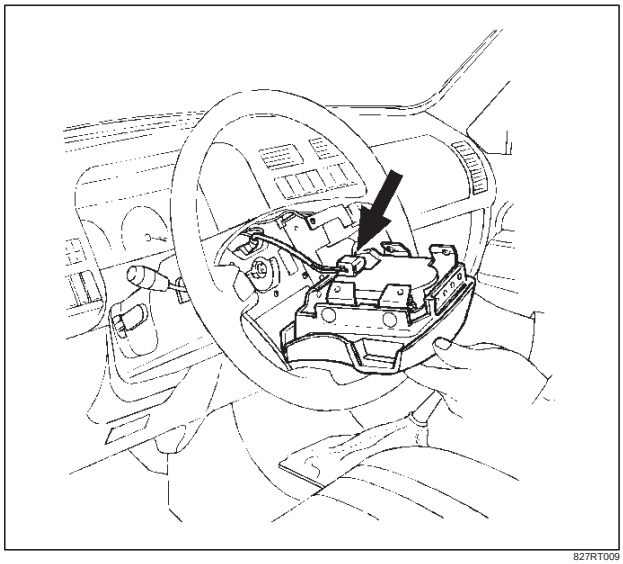

827RT009

17. Install air bag into steering wheel and tighten bolts to specified sequence as shown in figure.

    Torque: 8.8 N·m (78 lb in)

CAUTION: Never use the air bag assembly from another vehicle and difference model year air bag assembly.

The air bag assembly has identification colors on the bar code label from ’00 model as follows.

Yellow color for driver air bag assembly.

White color for passenger air bag assembly.

Use only new air bag assembly proper to the Trooper which is being repaired.

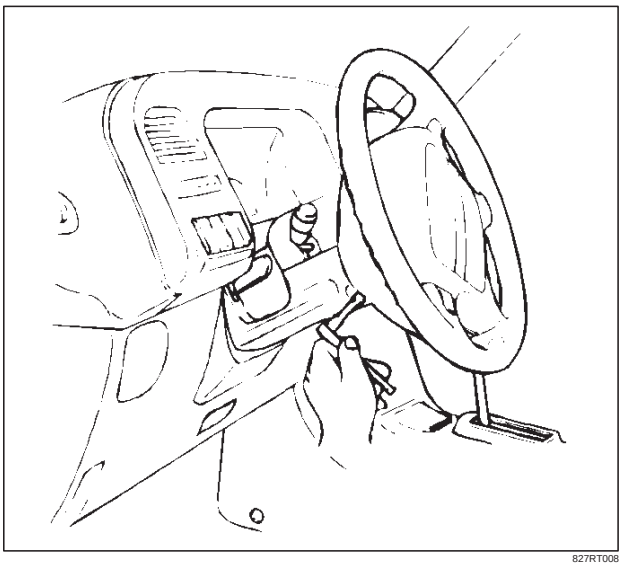

827RT008

18. Enable the SRS (Refer to “Enabling the SRS” in this section).

Downloaded from www.Manualslib.com manuals search engine

Passenger Air Bag Assembly

Service Precautions

WARNING: SAFETY PRECAUTIONS MUST BE FOLLOWED WHEN HANDLING A DEPLOYED AIR BAG ASSEMBLY. AFTER DEPLOYMENT, THE AIR BAG ASSEMBLY SURFACE MAY CONTAIN A SMALL AMOUNT OF SODIUM HYDROXIDE, A BY–PRODUCT OF THE DEPLOYMENT REACTION, THAT IS IRRITATING TO THE SKIN AND EYES. MOST OF THE POWER ON THE AIR BAG ASSEMBLY IS HARMLESS. AS A PRECAUTION, WEAR GLOVES AND SAFETY GLASSES WHEN HANDLING A DEPLOYED AIR BAG ASSEMBLY, AND WASH YOUR HANDS WITH MILD SOAP AND WATER AFTERWARDS.

WARNING: WHEN CARRYING A LIVE AIR BAG ASSEMBLY, MAKE SURE THE BAG AND TRIM COVER ARE POINTED AWAY FROM YOU. NEVER CARRY AIR BAG ASSEMBLY BY THE WIRES OR CONNECTOR ON THE UNDERSIDE OF MODULE. IN THE CASE OF AN ACCIDENTAL DEPLOYMENT, THE BAG WILL THEN DEPLOY WITH MINIMAL CHANCE OF INJURY. WHEN PLACING ALIVE AIR BAG ASSEMBLY ON A BENCH OR OTHER SURFACE, ALWAYS FACE BAG AND RIM COVER UP, AWAY FROM THE SURFACE. NEVER REST A STEERING COLUMN ASSEMBLY ON THE STEERING WHEEL WITH THE AIR BAG ASSEMBLY FACE DOWN AND COLUMN VERTICAL. THIS IS NECESSARY SO THAT A FREE SPACE IS PROVIDED TO ALLOW THE AIR BAG ASSEMBLY TO EXPAND IN THE UNLIKELY EVENT OF ACCIDENTAL DEPLOYMENT. OTHERWISE, PERSONAL INJURY COULD RESULT.

NOTE: **IN THE EVENT DEPLOYMENT HAS OCCURRED, INSPECT COIL ASSEMBLY WIRE FOR ANY SIGNS OF SCORCHING, MELTING OR ANY OTHER DAMAGE DUE TO EXCESSIVE HEAT. IF THE COIL HAS BEEN DAMAGED, REPLACE IT.**

Removal

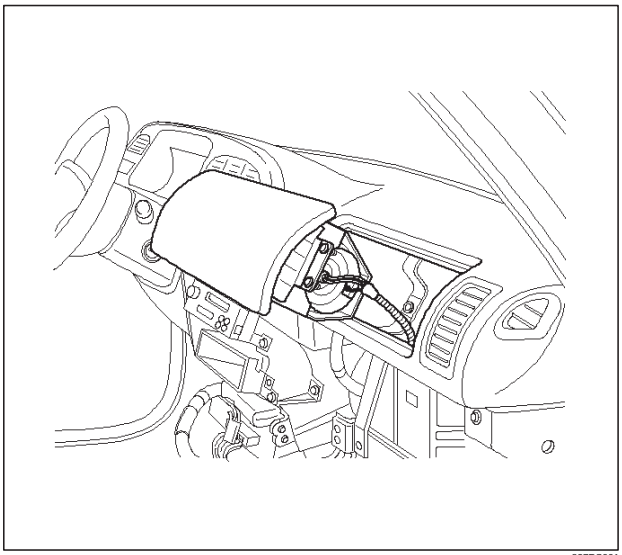

827RS001

1. Disable the SRS (Refer to “Disabling the SRS ” in this section).
2. Remove gear control knob.
3. Remove front console assembly.
4. Remove rear console assembly and disconnect harness connector.
5. Remove ECM and SDM cover.
6. Remove glove box assembly with lid.
7. Remove glove box cover.
8. Remove instrument panel assist side lower cover.
9. Disconnect engine hood opener lever.
10. Remove instrument panel door side lower cover.
11. Remove lower cluster with ashtray.
12. Remove meter cluster assembly and disconnect harness connector.
13. Remove instrument panel lower center cover.
14. Disconnect passenger air bag assembly harness connector.
15. Remove air bag assembly fixing bolts and nuts.
16. Remove passenger air bag assembly.

Downloaded from www.Manualslib.com manuals search engine

Installation

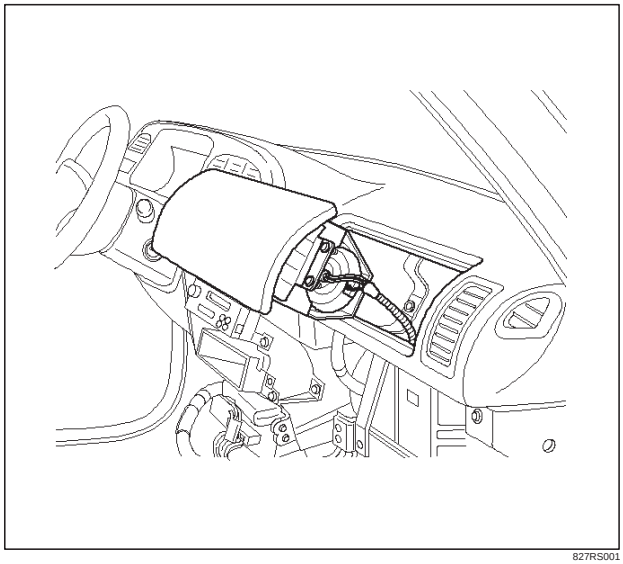

1. Install passenger air bag assembly.
2. Install air bag assembly fixing nuts and tighten to specified torque.

   Torque: 6 N·m (52 lb in)
3. Connect air bag assembly harness connector.
4. Install instrument panel lower center cover.
5. Install meter cluster assembly and connect harness connector.
6. Install lower cluster with ashtray.
7. Install instrument panel door side lower cover.
8. Connect engine hood opener lever.
9. Install instrument panel assist side lower cover.
10. Install glove box cover.
11. Install glove box assembly with lid.
12. Install ECM and SDM cover.
13. Install rear console assembly and connect harness connector.
14. Install front console assembly.
15. Install gear control knob.
16. Enable the SRS (Refer to “Enabling the SRS” in this section).

Main Data and Specifications

Fastener Tightening Specification

Application	N·m	Lb Ft	Lb In.
SDM	10	—	87
Driver air bag fixing bolt	8.8	—	78
Steering wheel fixing bolt	34	25	—
Steering column (dash panel side fixing bolts)	20	14	—
Steering column (Pedal bracket fixing bolt)	20	14	—
Steering column (Universal joint fixing bolt)	31	23	—
Passenger Air Bag fixing nuts	6	—	52

Downloaded from www.Manualslib.com manuals search engine

Trooper

RESTRAINTS

RESTRAINT CONTROL SYSTEM

CONTENTS

Service Precaution 9J1–1
Diagnostic Information 9J1–2
System Schematic 9J1–4
SRS Diagnostic System Check 9J1–4
Chart A SDM Integrity Check 9J1–6
Chart B "AIR BAG" Warning Lamp Comes "ON" Steady 9J1–8
Chart C "AIR BAG" Warning Lamp Does Not Come "ON" Steady (1/2) 9J1–10
DTC 15 Passenger Deployment Loop Resistance High 9J1–13
DTC 16 Passenger Deployment loop Resistance Low 9J1–15
DTC 17 Passenger Deployment Loop Open 9J1–17
DTC 18 Passenger Deployment Loop Short To Ground 9J1–19
DTC 19 Passenger Deployment Loop Short To Voltage 9J1–21
DTC 21 Driver Deployment Loop Resistance High 9J1–23
DTC 22 Driver Deployment Loop Resistance Low 9J1–26
DTC 24 Driver Deployment Loop Short To Ground 9J1–28
DTC 25 Driver Deployment Loop Short To Voltage 9J1–30
DTC 26 Driver Deployment Loop Open 9J1–32
DTC 51 Deployment Event Commanded . . . 9J1–34
DTC 53 Deployment Commanded With Deployment Loop Fault Or Energy Reserves Out Of Range 9J1–36
DTC 61 Warning Lamp Circuit Failure 9J1–38
DTC 71 Internal SDM Fault 9J1–40

Service Precaution

WARNING: THIS VEHICLE HAS A SUPPLEMENTAL RESTRAINT SYSTEM (SRS). REFER TO THE SRS COMPONENT AND WIRING LOCATION VIEW IN ORDER TO DETERMINE WHETHER YOU ARE PERFORMING SERVICE ON OR NEAR THE SRS COMPONENTS OR THE SRS WIRING. WHEN YOU ARE PERFORMING SERVICE ON OR NEAR THE SRS COMPONENTS OR THE SRS WIRING, REFER TO THE SRS SERVICE INFORMATION. FAILURE TO FOLLOW WARNINGS COULD RESULT IN POSSIBLE AIR BAG DEPLOYMENT, PERSONAL INJURY, OR OTHERWISE UNNEEDED SRS SYSTEM REPAIRS.

CAUTION: Always use the correct fastener in the proper location. When you replace a fastener, use ONLY the exact part number for that application. ISUZU will call out those fasteners that require a replacement after removal. ISUZU will also call out the fasteners that require thread lockers or thread sealant. UNLESS OTHERWISE SPECIFIED, do not use supplemental coatings (Paints, greases, or other corrosion inhibitors) on threaded fasteners or fastener joint interfaces. Generally, such coatings adversely affect the fastener torque and the joint clamping force, and may damage the fastener. When you install fasteners, use the correct tightening sequence and specifications. Following these instructions can help you avoid damage to parts and systems.

Downloaded from www.Manualslib.com manuals search engine

Diagnostic Information

CAUTION: When fasteners are removed, always reinstall them at the same location from which they were removed. if a fastener needs to be replaced, use the correct part number fastener for that application. if the correct part number fastener is not available, a fastener of equal size and strength (or stronger) may be used. fasteners that are not reused, and those requiring thread locking compound will be called out. the correct torque value must be used when installing fasteners that require it. if the above conditions are not followed, parts or system damage could result.

Diagnostic Procedures

WARNING: TO AVOID DEPLOYMENT WHEN TROUBLESHOOTING THE SRS, DO NOT USE ELECTRICAL TEST EQUIPMENT SUCH AS A BATTERY–POWERED OR AC–POWERED VOLTMETER, OHMMETER, ETC., OR ANY TYPE OF ELECTRICAL EQUIPMENT OTHER THAN THAT SPECIFIED IN THIS MANUAL. DO NOT USE A NON POWERED, PROBE–TYPE TESTER. INSTRUCTIONS IN THIS MANUAL MUST BE FOLLOWED CAREFULLY, OTHERWISE PERSONAL INJURY MAY RESULT.

The diagnostic procedures used in this section are designed to aid in finding and repairing SRS problems. Outlined below are the steps to find and repair SRS problems quickly and effectively. Failure to carefully follow these procedures may result in extended diagnostic time, incorrect diagnosis and incorrect parts replacement.

1. **Perform The "SRS Diagnostic System Check".**
   The "SRS Diagnostic System Check" should always be the starting point of any SRS diagnostics. The "SRS Diagnostic System Check" checks for proper "AIR BAG" warning lamp operation and checks for SRS trouble codes using both "Flash Code" and "Scan Tool" Methods.
2. **Refer To The Proper Diagnostic Chart As Directed By The "SRS Diagnostic System Check".**
   The "SRS Diagnostic System Check" will lead you to the correct chart to diagnose any SRS problems. Bypassing these procedures may result in extended diagnostic time, incorrect diagnosis and incorrect parts replacement.
3. **Repeat The "SRS Diagnostic System Check" After Any Repair Or Diagnostic Procedures Have Been Performed.**
   Preforming the "SRS Diagnostic System Check" after all repair or diagnostic procedures will assure that the repair has been made correctly and that no other conditions exist.

Diagnostic Codes

The Sensing and Diagnostic Module (SDM) maintains a history record of all diagnostic codes that have been detected since the SRS codes were last cleared during service.

1. Active Codes — Faults that are presently detected this ignition cycle. Active codes are stored in RAM (Random Access Memory).
2. History Codes — All faults detected since the last time the history fault memory was cleared. History codes are stored in EEPROM. (Electronically Erasable Programmable Read only Memory)

How To Read Trouble Codes

All codes (Active and history) can be read (or cleared) by using a scan tool or equivalent.
If a PDT is not available, have the vehicle serviced by ISUZU dealer.

How To Clear Trouble Codes

Trouble codes can only be cleared by using a Scan Tool. If a "scan tool" is not available then inform the owner of the stored codes and suggest that the codes are cleared upon the next visit to an Isuzu dealership.

Scan Tool Diagnostics

A scan tool can be used to read current and history codes and to clear all history codes after a repair is complete. The scan tool must be updated to communicate with the SRS through a replaceable cartridge or a manufacturer's update before it can be used for SRS diagnostics. To use the scan tool, connect it to the DLC connector and turn the ignition switch "ON". Then follow the manufacturer's directions for communication with the SRS. The scan tool reads serial data from the SDM "Serial Data" output (terminal 24) to the DLC connector (terminal 9).

Basic Knowledge Required

Before using this section of the Service Manual, there is some basic knowledge which will be required. Without this knowledge, you will have trouble using the diagnostic procedures in this section. Use care to prevent harm or unwanted deployment. Read all cautions in the service manual and on warning labels attached to SRS components.

Basic Electrical Circuits

You should understand the basic theory of electricity including series and parallel circuits, and understand the voltage drops across series resistors. You should know the meaning of voltage (volts), current (amps), and resistance (ohms). You should understand what happens in a circuit with an open or a shorted wire. You should be able to read and understand a wiring diagram.

"Flash Code" Diagnostics

Flash code diagnostics can be used to read active codes and to determine if history codes are present but cannot be used to clear codes or read history codes. Flash code diagnostics is enabled by grounding by terminal 4 shorting to terminal 13 of the DLC connector with the ignition switch "ON". Grounding terminal 4 of the DLC connector pulls the "Diagnostics Request" input (Terminal 1) of the SDM low and signals the SDM to enter the flash code diagnostic display mode.

Downloaded from www.Manualslib.com manuals search engine

The SDM displays the trouble codes by flashing the warning lamp. Each code that is displayed will consist of a number of flashes which represents the tens digit, a 1.2 second pause, following by a number of flashes which represents the ones digit of the code. Each code is displayed one time before moving on to the next code. After all of the codes have been displayed, the entire code sequence will continually by repeated until ground is removed from terminal 4 of the DLC connector.

Two special codes exist when reading in the flash code mode (Flash Code 12 and Flash Code 13). “Flash Code 12“ will always be the first code displayed when the flash code mode is enable Code 12 is not an indication of a SRS problem but an indication that the flash code mode has been enabled. If there are no active or history codes present, the SDM will display code 12 until ground is removed from the DLC connector at terminal 4. “flash Code 13” will be displayed if history codes are present. To read the history codes a scan tool must be used.

Downloaded from www.Manualslib.com manuals search engine

System Schematic

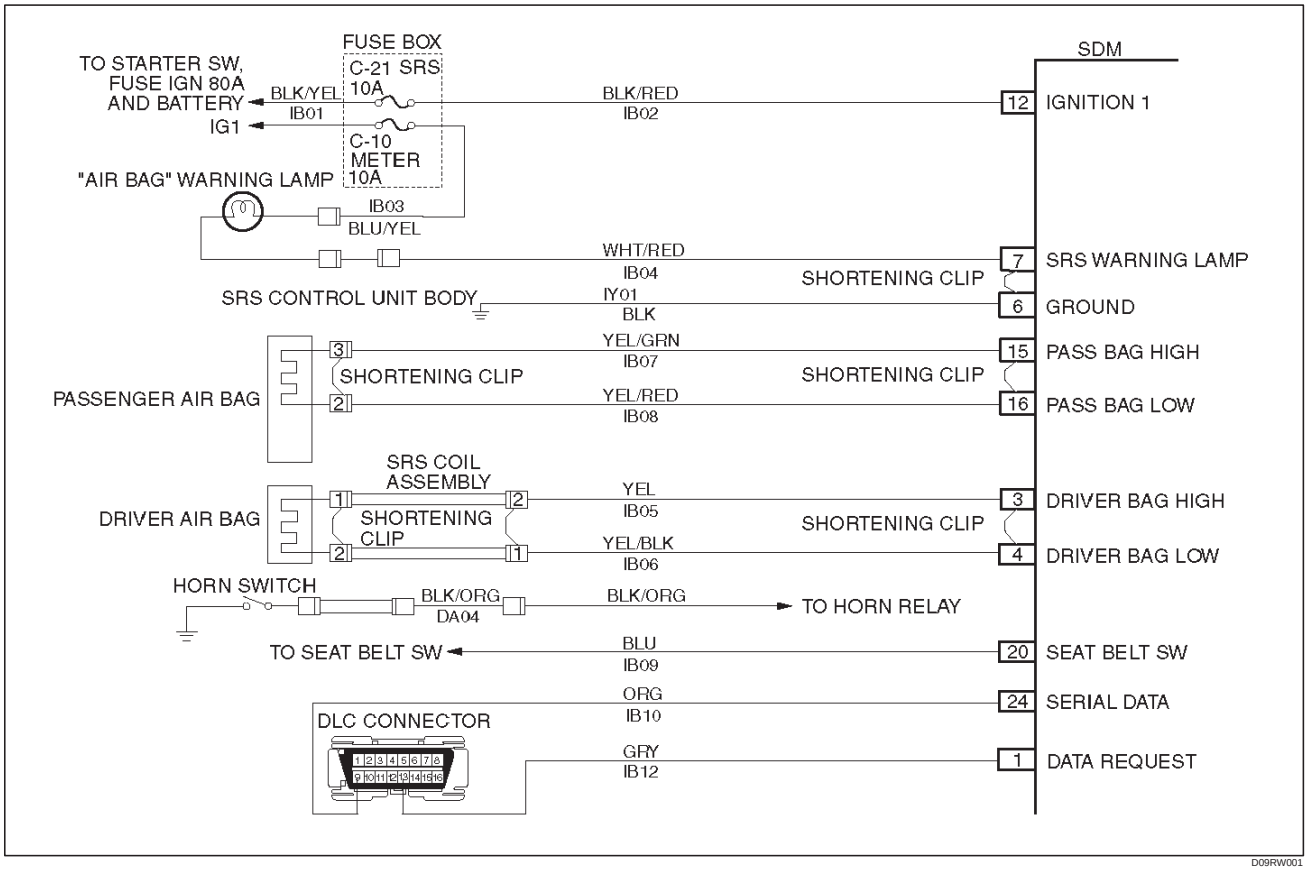

SRS Diagnostic System Check

The diagnostic procedures used in this section are designed to find and repair SRS malfunctions. To get the best results, it is important to use the diagnostic charts and follow the sequence listed below:

A. Perform the “SRS Diagnostic System Check.”

The “SRS Diagnostic System Check” must be the starting point of any SRS diagnostics. The “SRS Diagnostic System Check” checks for proper “AIR BAG” warning lamp operation, the ability of the SDM to communicate through the “Serial Data” line and whether SRS diagnostic trouble codes exist.

B. Refer to the proper diagnostic chart as directed by the “SRS Diagnostic System Check.”

The “SRS Diagnostic System Check” will lead you to the correct chart to diagnose any SRS malfunctions. Bypassing these procedures may result in extended diagnostic time, incorrect diagnosis and incorrect parts replacement.

C. Repeat the “SRS Diagnostic System Check” after any repair or diagnostic procedures have been preformed.

Performing the “SRS Diagnostic System Check” after all repair or diagnostic procedures will ensure that the repair has been made correctly and that no other malfunctions exist

Circuit Description

When the ignition switch is first turned “ON”, “Ignition 1” voltage is applied from the “C–21” fuse to the SDM at the “Ignition 1” input terminals “12”. The SDM responds by flashing the “AIR BAG” warning lamp seven times, while performing tests on the SRS.

Notes On System Check Chart:

1. The “AIR BAG” warning lamp should flash seven times after ignition is first turned “ON”.
2. After the “AIR BAG” warning lamp flashes seven times, it should turn “OFF”
3. This test checks for the proper operation of the “Serial Data” line. This test will also determine whether history diagnostic trouble codes are stored and, if so, identify them.
4. Improper operation of the “AIR BAG” warning lamp is indicated. This test differentiates a warning lamp stays “ON” condition from a warning lamp does not come “ON” condition.
5. This test checks for proper operation of the “Serial Data” line. This test will also identify the stored diagnostic trouble codes and whether they are current or history.

Diagnostic Aids:

The order in which diagnostic trouble codes are diagnosed is very important. Failure to diagnose the

Downloaded from www.Manualslib.com manuals search engine

diagnostic trouble codes in the order specified may result in extended diagnostic time, incorrect diagnosis and incorrect parts replacement.

SRS Diagnostic System Check

Step	Action	Yes	No
1	Note the “Air Bag” warning lamp as ignition switch is turned “ON.” Does the “AIR BAG” warning lamp flash seven (7) times?	Go to Step 2	Go to Step 3
2	Note the “AIR BAG” warning lamp after it flashed 7 times. Does the “AIR BAG” warning lamp go “OFF”?	Go to Step 4	Go to Step 5
3	Note the “AIR BAG” warning lamp as ignition switch is turned “ON”. Does the “AIR BAG” warning lamp come “ON” steady?	Go to Chart B	Go to Chart C
4	1. Note the “AIR BAG” warning lamp as that ignition switch is turned “ON.” Ignition switch “OFF.” 2. Connect a scan tool to data link connector. 3. Follow direction given in the scan tool instruction manual. Ignition switch “ON.” 4. Request the SRS diagnostic trouble code display, recode all history diagnostic trouble code(s). specify as such, on repair order Is (are) diagnostic trouble code(s) displayed?	Ignition switch “OFF” When DTC 71 is set, go to DTC 71 Chart For all other history codes refer to “Diagnostic Aids” For that specific DTC A history DTC indicates the malfunction has been repaired or is intermittent	SRS is functional and free of malfuncitons, no further diagnosis is required If scan tool indicated “NO DATA RECEIVED,” refer to chassis electrical section8
5	1. Ignition switch “OFF.” 2. Connect a scan tool to data link connector. 3. Follow directions as given in the scan tool instruction manual. 4. Ignition switch “ON.” 5. Request the SRS diagnostic trouble code display, Recode all diagnostic trouble code(s), specifying as current or history on repair order. Is (are) diagnostic trouble code (s) displayed?	Ignition switch “OFF” When DTC 53 is set, go to DTC 53 chart When DTC 51 is set, go to DTC 51 chart When DTC 19 is set, go to DTC 19 chart When DTC 25 is set, go to DTC 25 chart Diagnose remaining current DTCs from lowest to highest. When only history DTCs exist, refer to “Diagnostics Aids” for that specific DTC A history DTC indicates the malfunction has been repaired or is intermittent	If scan tool indicates “No Data Received,” refer to chassis electrical section8

Downloaded from www.Manualslib.com manuals search engine

Chart A SDM Integrity Check

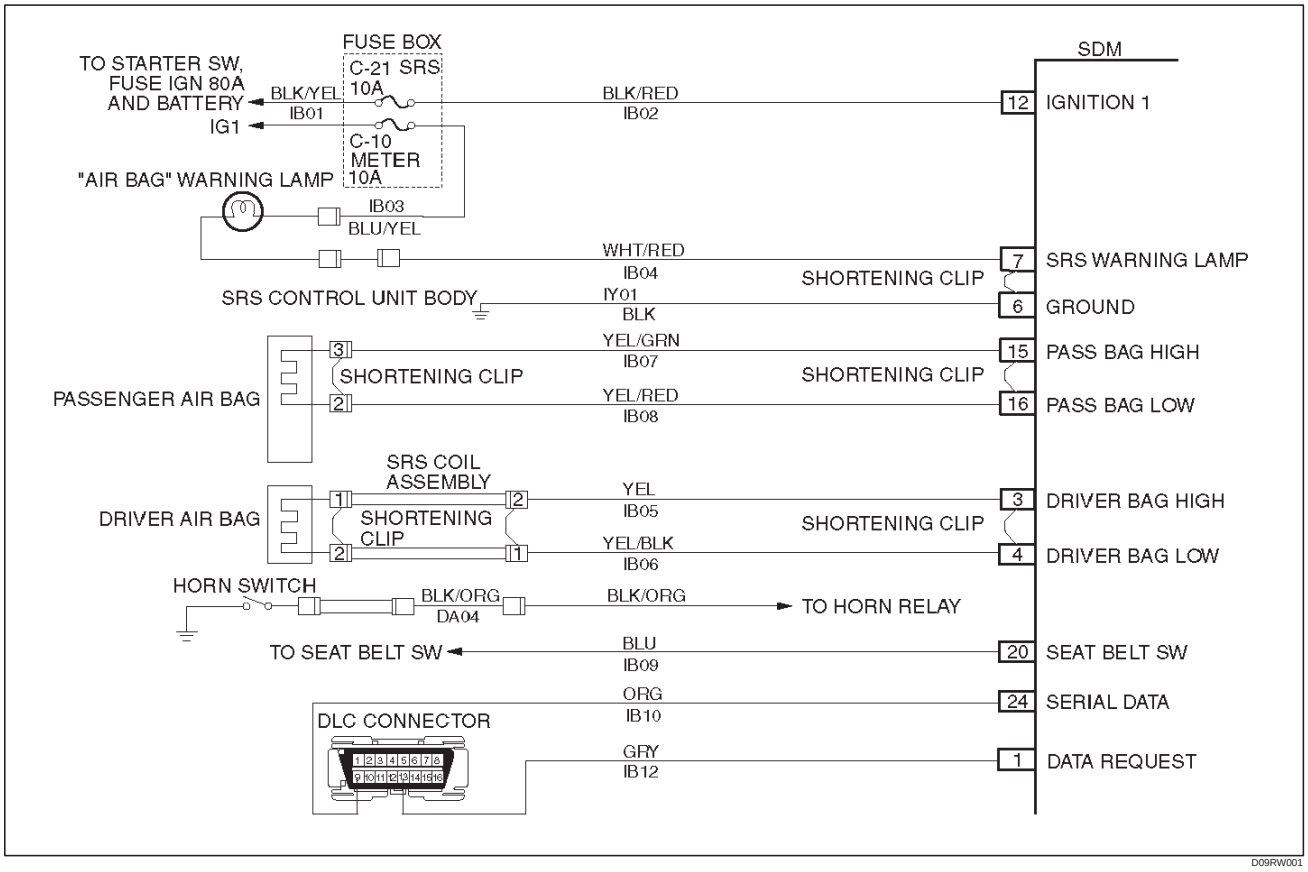

Circuit Description:

When the SDM recognizes “Ignition 1” voltage, applied to terminals “12”, is greater than 9 volts, the “AIR BAG” warning lamp is flashed 7 times to verify operation. At this time the SDM performs “Turn–ON” tests followed by “Continuous Monitoring” tests. When a malfunction is detected, the SDM sets a current diagnostic trouble code and illuminates the “AIR BAG” warning lamp. The SDM will clear current diagnostic trouble codes and move them to a history file when the malfunction is no longer detected and/or the ignition switch is cycled, except for DTCs 19, 25, 51, 53 and 71. DTC 71 can only be cleared using a scan tool “Clear Codes” command. If DTCs 51, 53 are not indicated then DTC 71 is not existing. DTCs 51, 53 and 71 can not be cleared after a “Clear Codes” command is issued.

Chart Test Description:

Number(s) below refer to step number(s) on the diagnostic chart:

1. This test confirms a current malfunction. If no current malfunction is occurring (history DTC set) the “Diagnostic Aids” for the appropriate diagnostic trouble code should be referenced. The SDM should not be replaced for a history diagnostic trouble code.
2. This test checks for a malfunction introduced into the SRS during the diagnostic process. It is extremely unlikely that a malfunctioning SDM would cause a new malfunction to occur during the diagnostic process.
3. When all circuitry outside the SDM has been found to operate properly, as indicated by the appropriate diagnostic chart, then and only then should the SDM be replaced.

Downloaded from www.Manualslib.com manuals search engine

Chart A SDM Integrity Check

WARNING: DURING SERVICE PROCEDURES. BE VERY CAREFUL WHEN HANDLING A SENSING AND DIAGNOSTIC MODULE (SDM). NEVER STRIKE OR JAR THE SDM. NEVER POWER UP THE SRS WHEN THE SDM IS NOT RIGIDLY ATTACHED TO THE VEHICLE. ALL SDM AND MOUNTING BRACKET FASTENERS MUST BE CAREFULLY TORQUED AND THE ARROW MUST BE POINTING TOWARD THE FRONT OF THE VEHICLE TO ENSURE PROPER OPERATION OF THE SRS. THE SDM COULD BE ACTIVATED WHEN POWERED WHILE NOT RIGIDLY ATTACHED TO THE VEHICLE WHICH COULD CAUSE DEPLOYMENT AND RESULT IN PERSONAL INJURY.

Step	Action	Yes	No
1	1. This chart assumes that the “SRS Diagnostic System Check” and either a symptom chart or a diagnostic trouble code chart diagnosis have been performed. When all circuitry outside the SDM has been found to operate properly, as indicated by the appropriate diagnostic chart, and the symptom or DTC remains current, the following 2. Diagnostic procedures must be performed to verify the need for SDM replacement. 3. Ignition switch “OFF”. 4. Reconnect all SRS components, ensure all components are properly mounted. 5. Ensure the ignition switch has been “OFF” for at least 15 seconds. 6. Note “AIR BAG” warning lamp as ignition switch is turned “ON.” Does warning lamp flash 7 times then go “OFF”?	The symptom or DTC is no longer occurring Clear SRS diagnostic trouble codes Repeat “SRS Diagnostic System Check”	Go to Step 2
2	Using a scan tool request diagnostic trouble code display. Is the same symptom or DTC occurring as was when the “SRS Diagnostic System Check ” was first performed?	Go to Step 3	Ignition switch “OFF” Go to the appropriate chart for the indicated malfunction
3	1. Clear “SRS Diagnostic Trouble Codes”. 2. Ignition switch “OFF” for at least two minutes. 3. Note “AIR BAG” warning lamp as ignition switch is turned “ON.” Does warning lamp flash 7 times then go “OFF”?	SRS is functional and free of malfunctions No further diagnosis is required Go to Step 4	Ignition switch “OFF” Replace SDM Go to Step 4
4	Reconnect all SRS components, ensure all components are properly mounted. Was this step finished?	Repeat the “SRS Diagnostic System Check”	Go to Step 4

Downloaded from www.Manualslib.com manuals search engine

Chart B "AIR BAG" Warning Lamp Comes "ON" Steady

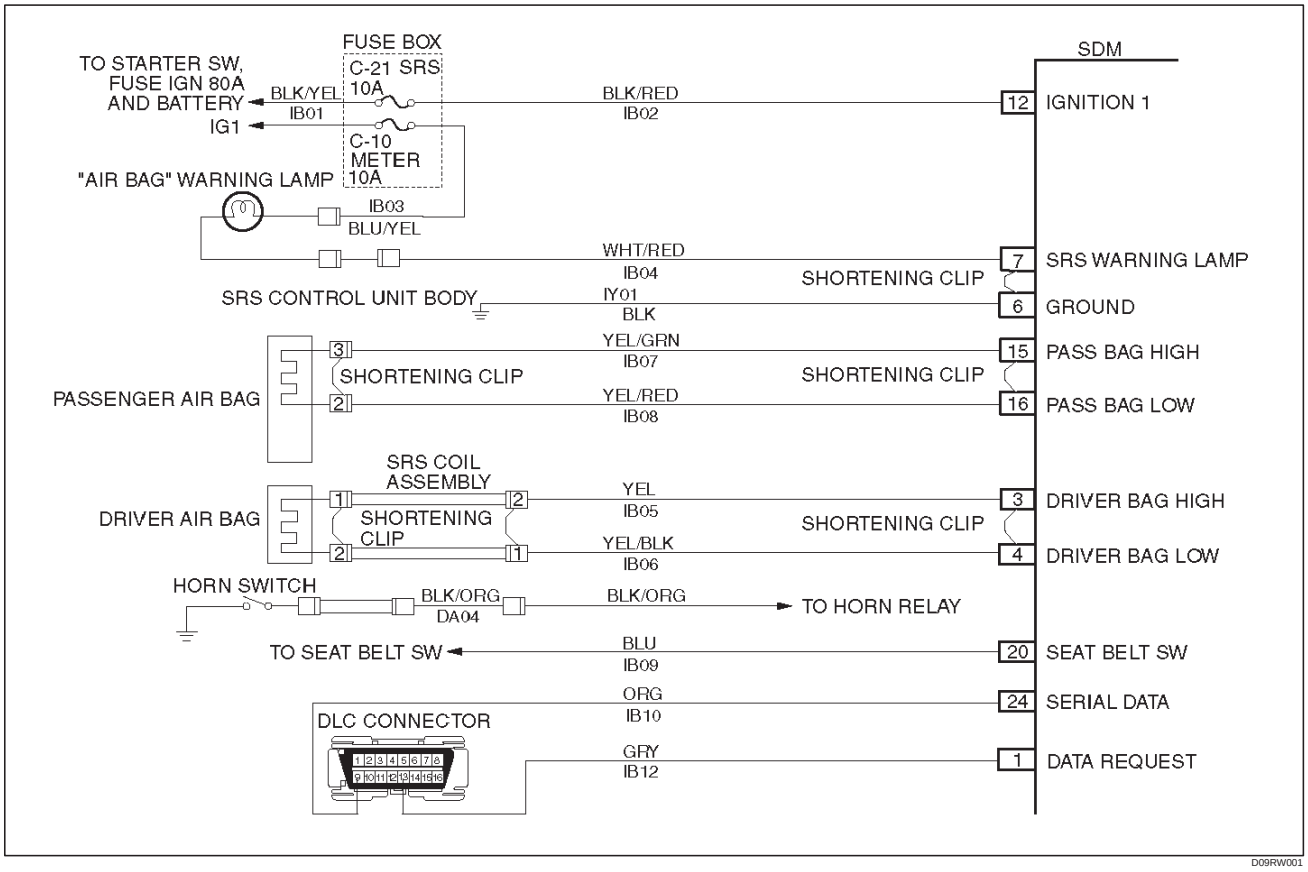

Circuit Description:

When the ignition switch is first turned "ON", "Ignition 1" voltage is applied from the "C–10" fuse to "AIR BAG", warning lamp which is connected to "SRS Warning Lamp", terminal "7". The "C–21" fuses apply system voltage to the "Ignition 1" inputs, terminals "12". The SDM responds by flashing the "AIR BAG" warning lamp 7 times. If "Ignition 1" is less than 9 volts, the "AIR BAG" warning lamp will come "ON" solid with no DTCs set.

Chart Test Description:

Number(s) below refer to step number(s) on the diagnostic chart.

2. This test checks for an open in the "Ignition 1" circuit to the SDM.
3. This test checks for the voltage of "IGNITION 1".
4. This test determines whether the malfunction is a short to ground in CKT IB04–WHT/RED.

Downloaded from www.Manualslib.com manuals search engine

Chart B “AIR BAG” warning lamp comes “ON” Steady

Step	Action	Yes	No
1	1. When measurements are requested in this chart use J–39200 DVM with correct terminal adapter from J–35616–A. 2. Ignition switch “OFF.” 3. Connect scan tool to data link connector, follow directions as given in the scan tool instruction MANUAL. 4. Ignition switch “ON.” 5. Request SRS diagnostic trouble code display. Dose scan tool indicate “No Data Received”?	Go to Step 2	Go to Step 3
2	1. Ignition switch “OFF”. 2. Inspect SDM harness connector connection to SDM. Is it securely connected to the SDM?	Ignition switch “OFF” Replace SDM Go to Step 5	Connect SDM securely to de–activate shorting clip in SDM harness connector Go to Step 5
3	Using scan tool, request SRS data list. Is “ignition” more than 9 volts?	Go to Step 4	Ignition switch “OFF” Replace SDM Go to Step 5
4	1. Ignition switch “OFF.” 2. Disconnect SRS coil and passenger air bag assemblies. yellow 2–pin connector located at base of steering column and behind the glove box assembly. Disconnect SDM. 3. Disconnect the connector of “SRS Warning Lamp” of instrument cluster. 4. Measure resistance from SDM harness connector terminal “6” to ground. Does J–39200 display “OL” (Infinite)?	Go to Chart A	Replace SRS harness Go to Step 5
5	Reconnect all SRS components, ensure all components are properly mounted. Was this step finished?	Repeat the “SRS Diagnostic System Check”	Go to Step 5

Downloaded from www.Manualslib.com manuals search engine

Chart C "AIR BAG" Warning Lamp Does Not Come "ON" Steady (1/2)

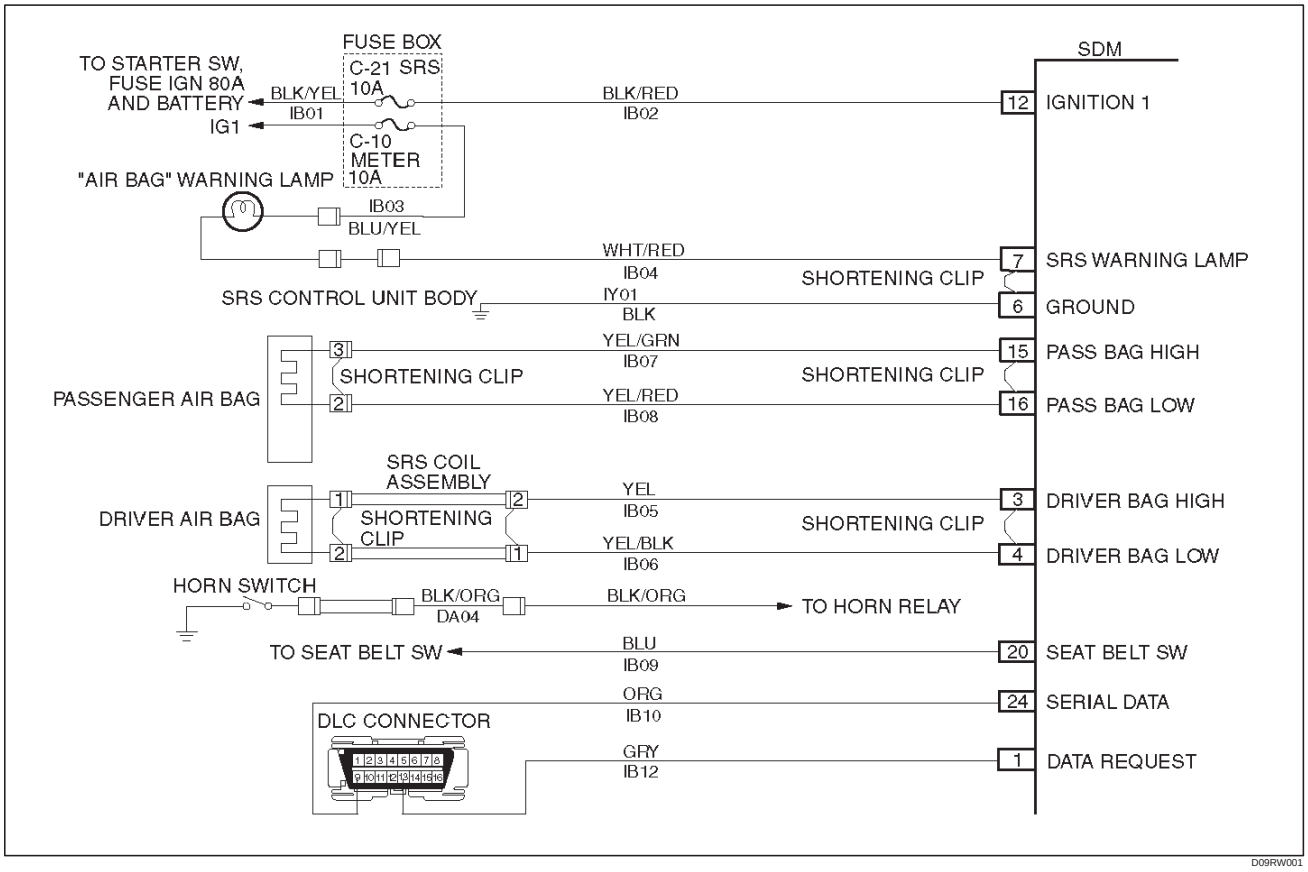

Circuit Description:

When the ignition switch is first turned "ON", "Ignition 1" voltage is applied from the "C–10" fuse to the "AIR BAG" warning lamp which is connected to "SRS Warning Lamp", terminal "7". The "C–21" fuse apply system voltage to the "Ignition 1" inputs, terminals "12". The SDM responds by flashing the "AIR BAG" warning lamp seven times. If "Ignition 1" is more than 16 volts, the "AIR BAG" warning lamp will be still "OFF" solid with no DTCs set.

Chart Test description:

Number(s) below refer to step number(s) on the diagnostic chart:

1. This test decides whether power is available to SDM warning lamp power feed circuit.
2. This test determines whether the voltage is present in the warning lamp circuit.
3. This test determines if the malfunction is in the instrument cluster.
4. This test checks for open in the warning lamp circuitry.
5. This test isolates the IB04–WHT/RED circuit and checks for a short in the IB04–WHT/RED circuit to B+.
8. This test checks for a short from the SDM warning lamp power feed circuit to ground.
9. This test determines whether the short to ground is due to a short in the wiring.

Downloaded from www.Manualslib.com manuals search engine

Chart C “AIR BAG” Warning Lamp Does Not Come “ON” Steady

Step	Action	Yes	No
1	1. When measurements are requested in this chart,use J–39200 DVM with correct terminal adapter from J–35616–A. 2. Ignition switch “OFF.” 3. Remove and inspect “C–10” fuse to the “AIR BAG” warning lamp. Is fuse good?	Go to Step 2	Go to Step 7
2	1. Ignition switch “OFF.” 2. Disconnect SRS coil and passenger air bag assemblies. Yellow 2–pin connector located at base of steering column and behind the glove box assembly. 3. Disconnect SDM. 4. Ignition switch “ON.” 5. Measure voltage on SDM harness connector from terminal “7” to terminal “6” (ground). Is system voltage present on terminal “7”?	Go to Step 4	Go to Step 3
3	1. Ignition switch “OFF.” 2. Remove instrument meter cluster. 3. Check for proper connection to instrument cluster at IB04–WHT/RED terminal. 4. If ok, then remove and inspect “AIR BAG” bulb. Is bulb good?	Go to Step 5	Replace bulb Go to Step 6
4	1. Ignition switch “OFF.” 2. Disconnect instrument meter cluster harness connector. 3. Ignition switch “ON.” 4. Measure voltage on SDM harness connector from terminal “7” to terminal “6” (GROUND). Is voltage 1 volt or less?	Go to Chart A	Replace SRS harness Go to Step 6
5	1. Install bulb. 2. Measure resistance from instrument meter cluster harness connector IB04–WHT/RED terminal to SDM harness connector terminal “7”. Is resistance 5.0 ohms or less?	Service instrument meter cluster Install instrument meter cluster Go to Step 6	Replace SRS harness Go to Step 6
6	Reconnect all SRS components, ensure all components are properly mounted. Was this step finished?	Repeat the “SRS Diagnostic System Check”	Go to Step 6
7	Perform chart C. Was this step finished?	Go to Step 8	Go to Step 1
8	1. Replace “C–10” fuse. 2. Ignition switch “ON” wait 10 Seconds then ignition switch “Off.” 3. Remove and inspect “C–10” fuse. Is fuse good?	Install “C–10” fuse Go to Step 10	Go to Step 9

Downloaded from www.Manualslib.com manuals search engine

Chart C “AIR BAG” Warning Lamp Does Not Come “ON” Steady (Cont’d)

Step	Action	Yes	No
9	1. Disconnect SRS coil and passenger air bag assemblies. Yellow 2–pin connector located at base of steering column and behind the glove box assembly. 2. Disconnect SDM. 3. Replace “C–10” fuse. 4. Ignition switch “ON” wait 10 seconds. 5. Ignition switch “OFF”. 6. Remove and inspection “C–10” fuse. Is fuse good?	Install“C–10” fuse Go to Chart A	Replace SRS harness Replace “C–10” fuse Go to Step 10
10	Reconnect all SRS components, ensure all components are properly mounted. Was this step finished?	Repeat the “SRS Diagnostic System Check”	Go to Step 10

Downloaded from www.Manualslib.com manuals search engine

DTC 15 Passenger Deployment Loop Resistance High

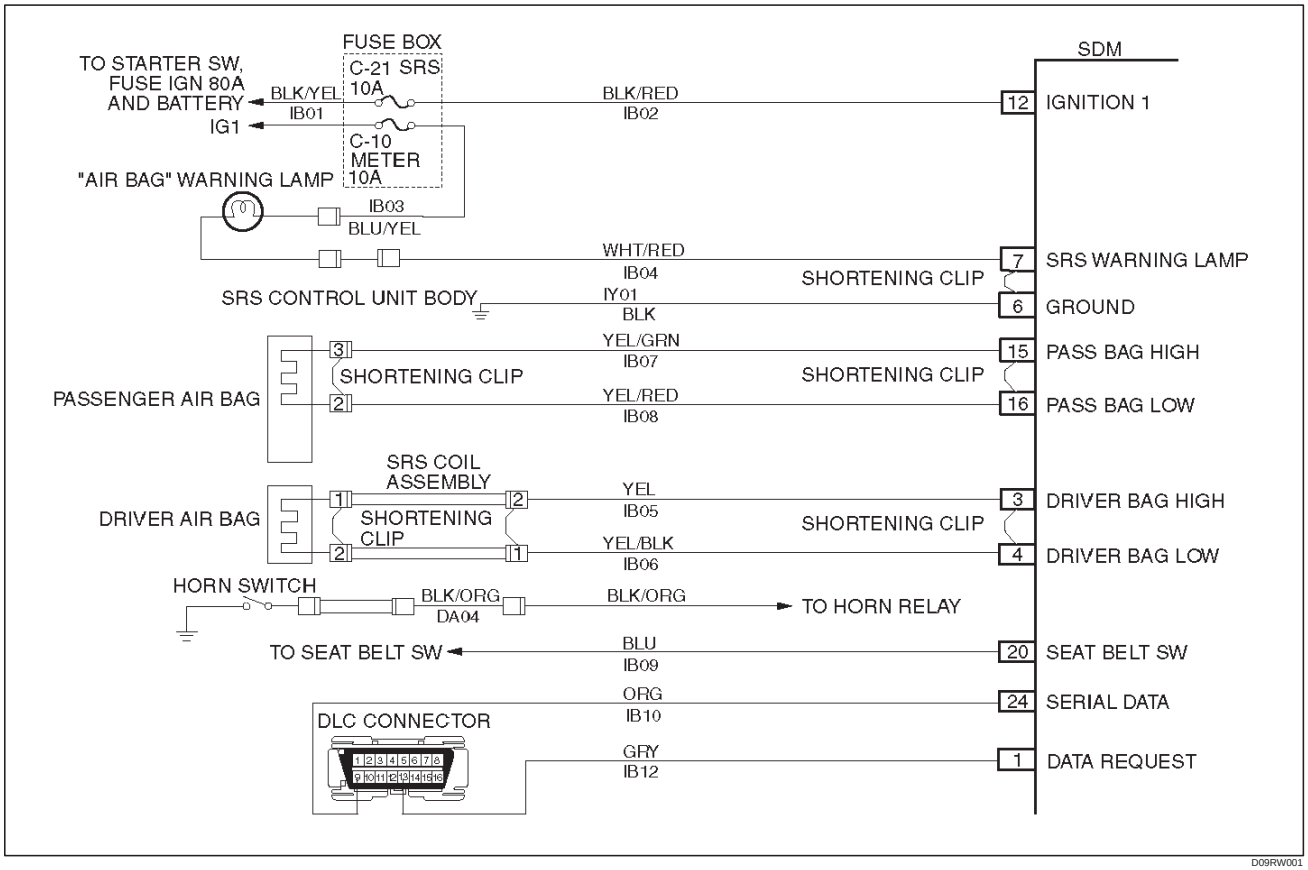

Circuit Description:

When the ignition switch is turned “ON”, the SDM will perform tests to diagnose critical malfunctions within itself. Upon passing these tests “Ignition 1”, and deployment loop voltages are measured to ensure they are within their respective normal voltage ranges. The SDM then proceeds with the “Resistance Measurement Test”. “Passenger Bag Low” terminal “16” is grounded through a resister and the passenger current source connected to “Passenger Bag High” terminal “15” allows a known amount of current to flow. By monitoring the voltage difference between “Passenger Bag High” and “Passenger Bag Low” the SDM calculates the combined resistance of the passenger air bag assembly, harness wiring CKTs IB07–YEL/GRN and IB08–YEL/RED connector terminal contact.

DTC Will Set When:

The combined resistance of the passenger air bag assembly, harness wiring CKTs IB07–YEL/GRN and IB08–YEL/RED, and connector terminal contact is above a specified value. This test is run once each ignition cycle during the “Resistance Measurement Test” when:

1. No “higher priority faults” are detected during “Turn–ON”,
2. “Ignition 1” voltage is in the specified value.

Action Taken:

SDM turns “ON” the “AIR BAG” warning lamp and sets a diagnostic trouble code.

DTC Will Clear When:

The ignition switch is turned “OFF.”

DTC Chart Test Description:

Number(s) below refer to step number(s) on the diagnostic chart:

2. This test determines whether the malfunction is in the SDM.
3. This test verifies proper connection of the yellow 2–pin connector.
4. This test checks for proper contact and/or corrosion of the yellow 2–pin connector terminals.
5. The test checks for a malfunctioning passenger air bag assembly.
6. This test determines whether the malfunction is due to high resistance in the wiring.

Diagnostic Aids:

An intermittent condition is likely to be caused by a poor connection at the passenger air bag assembly harness connector terminals “1” and “2”, SDM terminal “15” and “16”, or a poor wire to terminal connection in CKTs IB07–YEL/GRN and IB08–YEL/RED. This test for this diagnostic trouble code is only run while the “AIR BAG”

Downloaded from www.Manualslib.com manuals search engine

warning lamp is performing the bulb check, unless DTC 17 or DTC 26 is detected. When a scan tool “Clear Codes” command is issued and the malfunction is still present, the DTC will not reappear until the next ignition cycle.

DTC 15 Passenger Deployment loop Resistance High

Step	Action	Yes	No
1	Was the “SRS Diagnostic System Check” Performed?	Go to Step 2	Go to The “SRS Diagnostic System Check”
2	1. When measurements are requested in this chart use J–39200 DVM with correct terminal adapter from J–35616–A. 2. Use scan tool data list function, read and record the passenger deployment loop resistance. Is passenger resist. more than 2.9 ohms?	Go to Step 3	Go to Chart A
3	1. Ignition switch “Off.” 2. Make sure the passenger air bag assembly yellow 2–pin connector located behind the glove box assembly is seated properly. Is the yellow 2–pin connector connected properly?	Go to Step 4	Seat passenger Air Bag assembly yellow 2–pin connector properly Go to Step 7
4	1. Disconnect and inspect the passenger air bag assembly yellow 2–pin connector located behind the glove box assembly. 2. If ok, reconnect the passenger air bag assembly 2–pin connector. 3. Ignition switch “ON.” Is DTC 15 current?	Go to Step 5	Go to Step 7
5	1. Ignition switch “Off.” 2. Disconnect SRS coil and passenger air bag assembly, yellow 2–pin connector located at the base of the steering column and behind the glove box assembly. 3. Connect J–41433 SRS driver / passenger load tool and appropriate adapters to SRS coil and passenger air bag assembly harness connectors. 4. Ignition switch “ON.” Is DTC 15 Current?	Go to Step 6	Ignition switch “Off” Replace the passenger air bag assembly Go to Step 7
6	1. Ignition switch “Off.” 2. There has been an increase in the total circuit resistance of the passenger inflator deployment loop. 3. Use the high resolution ohmmeter mode of the DVM while checking CKTS IB07–YEL/GRN and IB08–YEL/RED, and SDM connector terminal “15” and “16” to locate the root cause. Was a fault found?	Replace SRS harness Go to Step 7	Go to Chart A
7	1. Reconnect all components ensure all component are properly mounted. 2. Clear diagnostic trouble codes. Was This step finished?	Repeat the “SRS Diagnostic System Check”	Go to Chart 7

Downloaded from www.Manualslib.com manuals search engine

DTC 16 Passenger Deployment loop Resistance Low

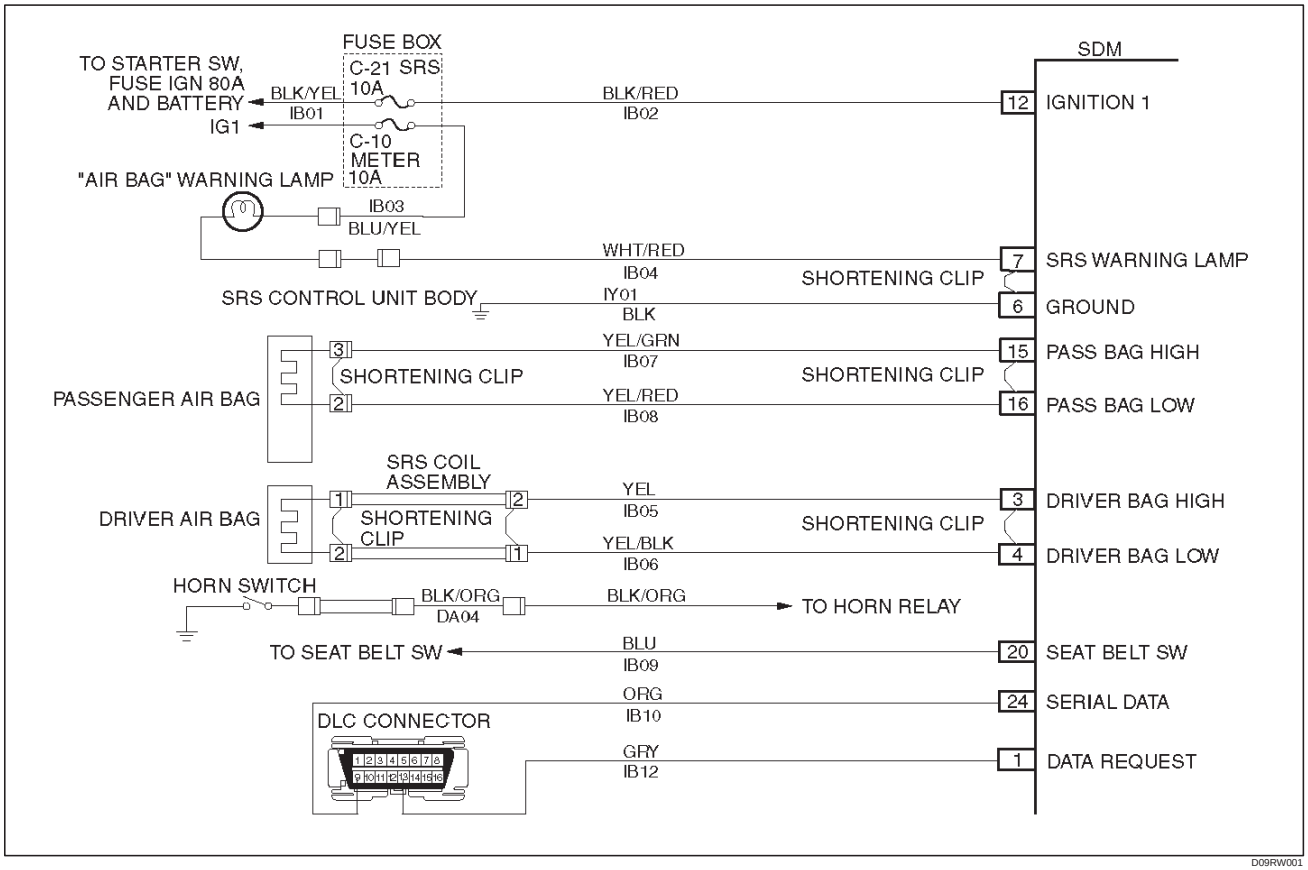

Circuit Description:

When the ignition switch is turned “ON”, the SDM will perform tests to diagnose critical malfunctions within itself. Upon passing these tests “Ignition 1”, and deployment loop voltages are measured to ensure they are within their respective normal voltage ranges. The SDM then proceeds with the “Resistance Measurement Test”. “Passenger Bag Low” terminal “16” is grounded through a resistor and the passenger current source connected to “Passenger Bag High” terminal “15” allows a known amount of current to flow. By monitoring the voltage difference between “Passenger Bag High” and “Passenger Bag Low”, the SDM calculates the combined resistance of the passenger air bag assembly, harness wiring CKTs IB07–YEL/GRN and IB08–YEL/RED connector terminal contact.

DTC Will Set When:

The combined resistance of the passenger air bag assembly, harness wiring CKTs IB07–YEL/GRN and IB08–YEL/RED, and connector terminal contact is above a specified value. This test is run once each ignition cycle during the “Resistance Measurement Test” when:

1. No “higher priority faults” are detected during “Turn–ON”,
2. “Ignition 1” voltage is in the specified value.

Action Taken:

SDM turns “ON” the “AIR BAG” warning lamp and sets a diagnostic trouble code.

DTC Will Clear When:

The ignition switch is turned “OFF.”

DTC Chart Test Description:

Number(s) below refer to step number(s) on the diagnostic chart:

2. This test determines whether the malfunction is in the SDM.
3. This test verifies connection of the yellow 2–pin connector.
4. This test cheeks for proper operation of the shorting clip in the yellow 2–pin connector.
5. The test checks for a malfunction passenger air bag assembly.
6. This test determines whether the malfunctioning is due to shortening in the wiring.

Diagnostic Aids:

An intermittent condition is likely to be caused by a short between CKTs IB07–YEL/GRN and IB08–YEL/RED, or a malfunctioning shorting clip on the passenger air bag assembly which would require replacement of the air bag assembly. The test for this diagnostic trouble code is only run while “AIR BAG” warning lamp is performing the bulb

Downloaded from www.Manualslib.com manuals search engine

check, unless DTC 17 or DTC 26 is detected. When a scan tool “Clear Codes” command is issued and the malfunction is still present, the DTC will not reappear until the next ignition cycle.

DTC 16 Passenger Deployment loop Resistance Low

Step	Action	Yes	No
1	Was the “SRS Diagnostic System Check” performed?	Go to Step 2	Repeat the “SRS Diagnostic System Check”
2	1. When measurements are requested in this chart use J–39200 DVM with correct terminal adapter from J–35616–A. 2. Using scan tool data list function, read and record the passenger deployment loop resistance. Is passenger resist. less than 1.4 ohms?	Go to Step 3	Go to Chart A
3	1. Ignition switch “Off.” 2. Make sure the passenger air bag assembly yellow 2–pin connector located behind the glove box assembly is seated properly. Is the yellow 2–pin connector connected properly?	Go to Step 4	Seat passenger air bag assembly yellow 2–pin connector properly Go to Step 7
4	1. Disconnect and inspect the passenger air bag assembly yellow 2–pin connector located behind the glove box assembly. 2. If ok, reconnect the passenger air bag assembly 2–pin connector. 3. Ignition switch “ON.” Is DTC 16 Current?	Go to Step 5	Go to Step 7
5	1. Ignition switch “Off.” 2. Disconnect SRS coil and passenger air bag assembly, yellow 2–pin connector located at the base of the steering column and behind the glove box assembly. 3. Connect J–41433 SRS driver/passenger load tool and appropriate adapters to SRS coil and passenger air bag assembly harness connectors. 4. Ignition switch “ON.” Is DTC 16 current?	Go to Step 6	Ignition switch “Off” Replace the passenger air bag assembly Go to Step 7
6	1. Ignition switch “Off.” 2. There has been a decrease in the total circuit resistance of the passenger inflator deployment loop. 3. Use the high resolution ohmmeter mode of the DVM while checking CKTS IB07–YEL/GRN and IB08–YEL/RED, and SDM connector terminal “15” and “16” to locate the root cause. Was a fault found?	Replace SRS harness Go to Step 7	Go to Chart A
7	1. Reconnect all components, ensure all component are properly mounted. 2. Clear diagnostic trouble codes. Was this step finished?	Repeat the “SRS Diagnostic System Check”	Go to Step 7

Downloaded from www.Manualslib.com manuals search engine

DTC 17 Passenger Deployment Loop Open

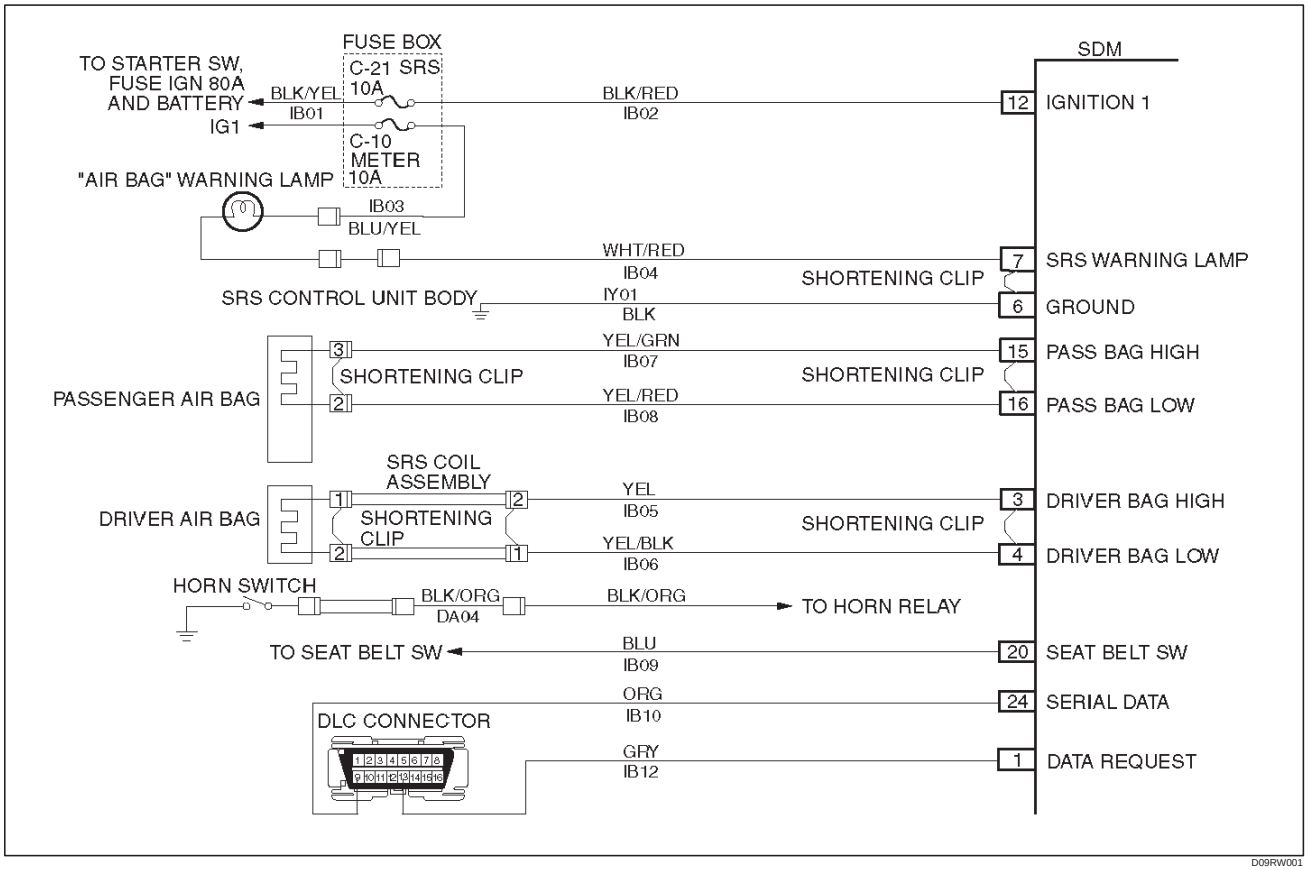

Circuit Description:

When the ignition switch is turned “ON”, the SDM will perform tests to diagnose critical malfunctions within itself. Upon passing these tests, “Ignition 1”, and deployment loop voltages are measured to ensure they are within their respective normal voltage ranges. During “Continuous Monitoring” diagnostics, a fixed amount of current is flowing in the deployment loop. This produces proportional voltage drops in the loop. By monitoring the voltage difference between “Passenger Bag High” and “Passenger Bag Low”, the SDM calculates the combined resistance of the passenger air bag assembly, harness wiring CKTs IB07–YEL/GRN AND IB08–YEL/RED, and connector terminal contact.

DTC Will Set When:

The voltage difference between “Passenger Bag High” terminal “15” and “Passenger Bag Low” terminal “16” is above or equal to a specified value for 500 milliseconds during “Continuous Monitoring”.

Action Taken:

SDM turns “ON” the “AIR BAG” warning lamp and sets a diagnostic trouble code.

DTC Will Clear When:

The voltage difference between “Passenger Bag High” terminal “15” and “Passenger Bag Low” terminal “16” is below a specified value for 500 milliseconds during “Continuous Monitoring”.

DTC Chart Test Description:

Number(s) below refer to step number(s) on the diagnostic chart:

2. This test determines whether the malfunction is in the SDM.
3. This test verifies proper connection of the yellow 2–pin connector.
4. This test cheeks for proper contact and/or corrosion of the shorting clip in the yellow 2–pin connector terminals.
5. The test checks for a malfunctioning passenger air bag assembly.
6. This test determines whether the open in the wiring.

Diagnostic Aids:

An intermittent condition is likely to be caused by a poor connection at the passenger air bag assembly harness connector terminals“1” and “2”, SDM terminals “15” and “16”, or an open in CKT IB07–YEL/GRN and IB08–YEL/RED.

Downloaded from www.Manualslib.com manuals search engine

DTC 17 Passenger Deployment Loop Open

Step	Action	Yes	No
1	Was the “SRS Diagnostic System Check” performed?	Go to Step 2	Go to the “SRS Diagnostic System Check”
2	1. When measurements are requested in this chart use J–39200 DVM with correct terminal adapter from J–35616–A. 2. Using scan tool data list function, read and record the passenger differential voltage. Is passenger VDIF. 0.4 volts or more?	Go to Step 3	Go to Chart A
3	1. Ignition switch “OFF”. 2. Make sure the passenger air bag assembly yellow 2–pin connector located behind the glove box assembly is seated properly. Is the yellow 2–pin connector connected properly?	Go to Step 4	Seat passenger air bag assembly yellow 2–pin connector properly Go to Step 7
4	1. Disconnect and inspect the passenger air bag assembly yellow 2–pin connector located behind the glove box assembly. 2. If ok, reconnect the passenger air bag assembly 2–pin connector. 3. Ignition switch “ON”. Is DTC 17 current?	Go to Step 5	Go to Step 7
5	1. Ignition switch “Off.” 2. Disconnect SRS coil and passenger air bag assembly, yellow 2–pin connector located at the base of the steering column and behind the glove box assembly. 3. Connect J–41433 SRS driver / passenger load tool and appropriate adapters to SRS coil and passenger air bag assembly harness connectors. 4. Ignition switch “ON.” Is DTC 17 current?	Go to Step 6	Ignition switch “Off” Replace the passenger air bag assembly Go to Step 7
6	1. Ignition switch “Off.” 2. There has been an open circuit resistance in the passenger deployment loop. 3. Use the high resolution ohmmeter mode of the DVM while checking CKTS IB07–YEL/GRN and IB08–YEL/RED, and SDM connector terminal “15” and “16” to locate the root cause. Was a fault found?	Replace SRS harness Go to Step 7	Go to Chart A
7	1. Reconnect all components ensure all component are properly mounted. 2. Clear diagnostic trouble codes. Was this step finished?	Go to the “SRS Diagnostic System Check”	Go to Step 7

Downloaded from www.Manualslib.com manuals search engine

DTC 18 Passenger Deployment Loop Short To Ground

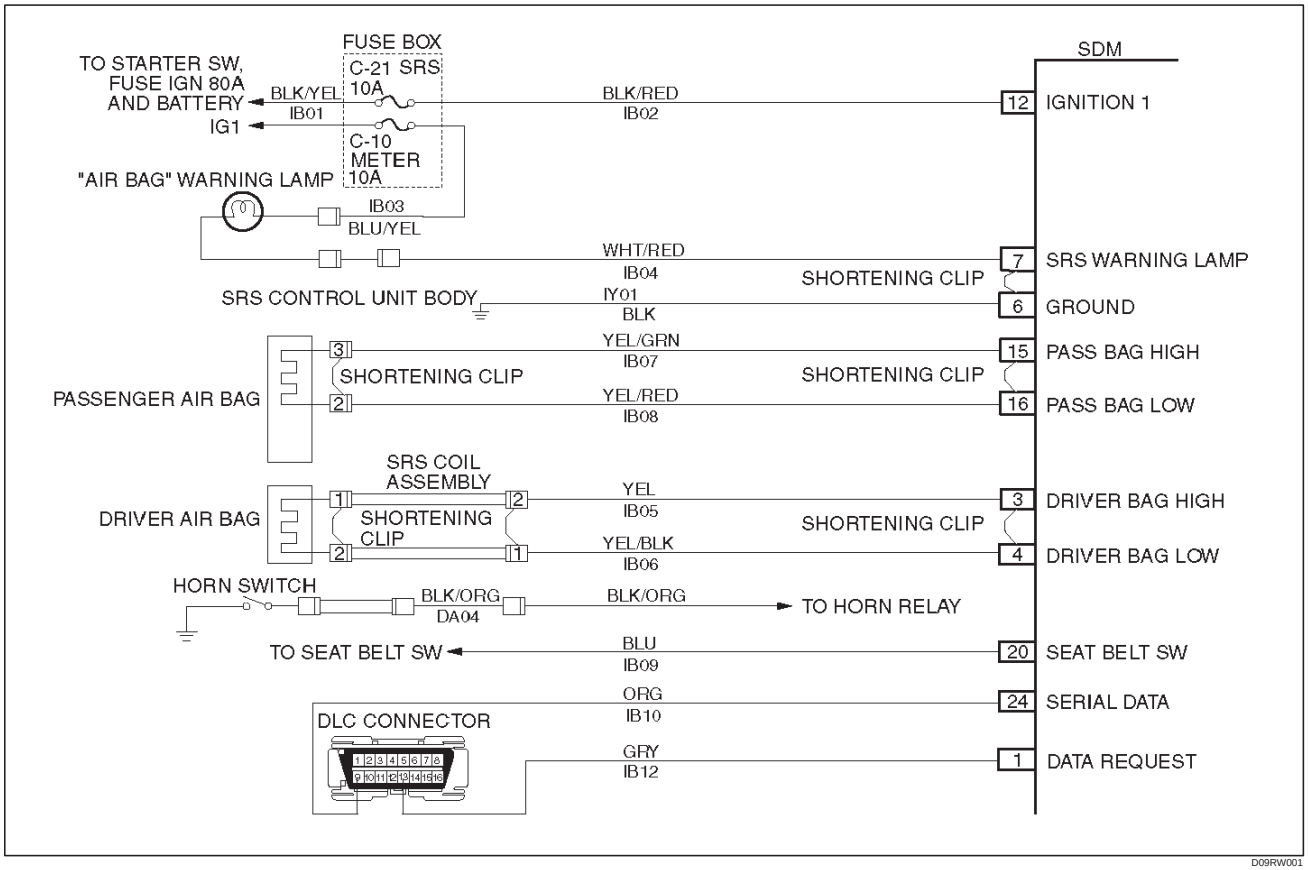

Circuit Description:

When the ignition switch is turned “ON”, the SDM will perform tests to diagnose critical malfunctions within itself. Upon passing these tests, “Ignition 1”, and deployment loop voltages are measured to ensure they are within their respective normal voltage ranges.
The SDM monitors the voltages at “Driver Bag Low” terminal “4” and “Passenger Bag Low” terminal “16” to detect short to ground in the air bag assembly circuits.

DTC Will Set When:

Neither of the two air bag assemblies is open.
“Ignition 1” is within the normal operating voltage range.
Once these conditions are met and the voltage at “Passenger Bag Low” is below a specified value, DTC 18 will set. This test is run once each ignition cycle and “Continuous Monitoring”.

Action Taken:

SDM turns “ON” the “AIR BAG” warning lamp and sets a diagnostic trouble code.

DTC Will Clear When:

This malfunction is no longer occurring and the ignition switch is turned “OFF”.

DTC Chart Test Description:

Number(s) below refer to circled number(s) on the diagnostic chart.

2. This test determines whether the SDM is malfunctioning.
3. This test isolates the malfunction to one side of the passenger air bag assembly yellow 2–pin connector behind glove box compartment.
4. This test determines whether the malfunction is in CKT IB07–YEL/GRN.
5. This test determines whether the malfunction is in CKT IB08–YEL/RED.

Diagnostic Aids:

An intermittent condition is likely to be caused by a short to ground in the passenger air bag assembly circuit. Inspect CKTs IB07–YEL/GRN and IB08–YEL/RED carefully for cutting or chafing. If the wiring pigtail of the passenger air bag assembly is damaged, the component must be replaced.

Downloaded from www.Manualslib.com manuals search engine

DTC 18 Passenger Deployment Loop Short To Ground

Step	Action	Yes	No
1	Was the “SRS Diagnostic System Check” performed?	Go to Step 2	Go to the “SRS Diagnostic System Check”
2	1. When measurements are requested in this chart use J–39200 DVM with correct terminal adapter from J–35616–A. 2. Ignition switch “OFF.” 3. Connect scan tool data link connector. follow directions as given in the scan tool operator’s MANUAL. 4. Ignition switch “ON.” 5. Read passenger sense LO. Is passenger sense LO less than 1.5 volts?	Go to Step 3	Go to Chart A
3	1. Ignition switch “OFF.” 2. Disconnect passenger air bag assembly yellow 2–pin connector behind the glove box assembly. 3. Leave driver air bag assembly connected. 4. Connect SRS driver / passenger load tool J–41433 and appropriate adapter to passenger air bag assembly harness connector. 5. Ignition switch “ON.” Is DTC 18 current?	Go to Step 4	Ignition switch “OFF” Replace passenger air bag assembly Go to Step 6
4	1. Ignition switch “OFF”. 2. Disconnect SRS driver / passenger load tool 3. Measure resistance on SDM harness connector from terminal “15” to terminal “16” (ground). Does J–39200 display “OL” (Infinite)?	Go to Step 5	Replace SRS Harness Go to Step 6
5	Measure resistance on SDM harness connector from terminal “16” to terminal “6” (ground). Does J–39200 display “OL” (Infinite)?	Go to Chart A	Replace SRS Harness Go to Step 6
6	1. Reconnect all components and ensure all component are Properly Mounted. 2. Clear diagnostic trouble codes. Was this step finished?	Go to the “SRS Diagnostic system check”	Go to Step 6

Downloaded from www.Manualslib.com manuals search engine

DTC 19 Passenger Deployment Loop Short To Voltage

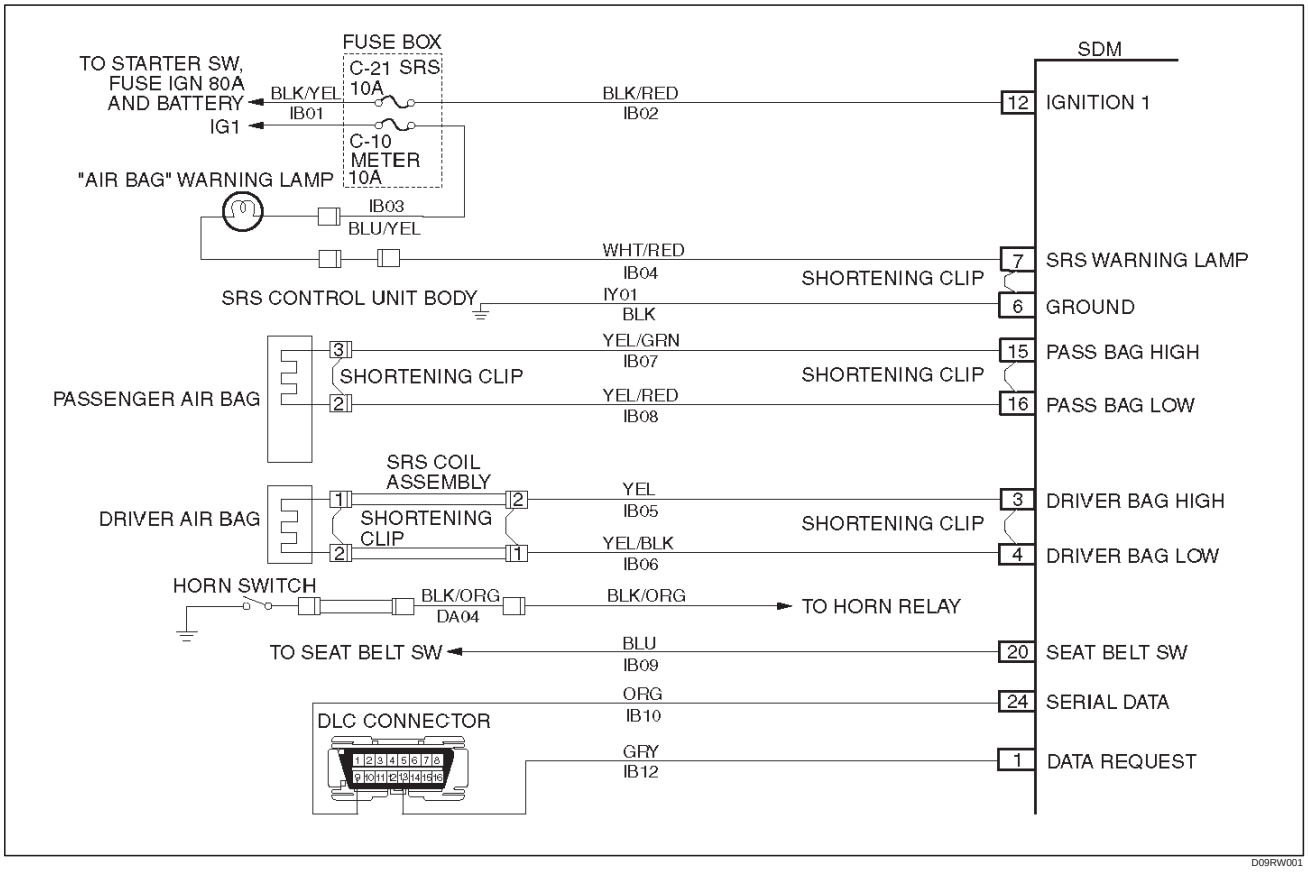

Circuit Description:

When the ignition switch is turned “ON”, the SDM will perform tests to diagnose critical malfunctions within itself. Upon passing these tests, “Ignition 1”, and deployment loop voltages are measured to ensure they are within their respective normal voltage ranges.

The SDM monitors the voltages at “Driver Bag Low” terminal “4” and “Passenger Bag Low” terminal “16” to detect short to B+ in the air bag assembly circuits.

DTC Will Set When:

“Ignition 1” is within the normal operating voltage range. Once these conditions are met and the voltage at “Passenger Bag Low” is above a specified value, DTC 19 will set. This test is run once each ignition cycle and “Continuous Monitoring”.

Action Taken:

SDM turns “ON” the “AIR BAG” warning lamp and sets DTC 19 and also DTC 71.

DTC Will Clear When:

The SDM is replaced.

DTC Chart Test Description:

Number(s) below refer to step number(s) on the diagnostic chart:

2. This test determines whether the malfunction is in the SDM.
3. This test isolates the malfunction to one side of the passenger air bag assembly yellow 2–pin connector behind glove box assembly.
4. This test determines whether the malfunction is in CKT IB07–YEL/GRN.
5. This test determines whether the malfunction is in CKT IB08–YEL/RED.

Diagnostic Aids:

An intermittent condition is likely to be caused by a short to B+ in the passenger air bag assembly circuit. Inspect CKTs IB07–YEL/GRN and IB08–YEL/RED carefully for cutting or chafing. If the wiring pigtail of the passenger air bag assembly is damaged, the component must be replaced. A careful inspection of CKT IB07–YEL/GRN and IB08–YEL/RED, including the passenger air bag assembly pigtail is essential to ensure that the replacement SDM will not be damaged.

Downloaded from www.Manualslib.com manuals search engine

DTC 19 Passenger Deployment Loop Short To Voltage

CAUTION: When DTC 19 has been set, it is necessary to replace the SDM. Setting DTC 19 will also cause DTC 71 to set. When a scan tool "CLEAR CODES" command is issued and the malfunction is no longer present, DTC 71 will remain current. Ensure that the short to voltage condition is repaired prior to installing a replacement SDM to avoid damaging the SDM.

Step	Action	Yes	No
1	Perform the "SRS Diagnostic System Check." Was the "SRS Diagnostic System Check" performed?	Go to Step 2	Repeat the "SRS Diagnostic System Check"
2	1. When measurements are requested in this chart use J–39200 DVM With correct terminal adapter from J–35616–A. 2. Ignition switch "OFF." 3. Connect scan tool data link connector. follow directions as given in the scan tool operator's manual. 4. Ignition switch "ON." 5. Read passenger sense LO. Is passenger sense LO more than 3.5 volts?	Go to Step 3	Go to chart A
3	1. Ignition switch "OFF". 2. Disconnect passenger air bag assembly yellow 2–pin connector behind the glove box assembly. 3. Leave driver air bag assembly connected. 4. Connect SRS driver / passenger load tool J–41433 and appropriate adapter to passenger air bag assembly harness connector. 5. Ignition switch "ON." Is passenger sense LO more than 3.5 volts?	Go to Step 4	Ignition switch "OFF" Replace passenger air bag assembly Go to Step 6
4	1. Ignition switch "OFF." 2. Disconnect SDM. 3. Disconnect SRS driver / passenger load tool. 4. Measure resistance on SDM harness connector from terminal "15" to terminal "12" (ignition). Does J–39200 display "OL" (infinite)?	Go to Step 5	Replace SRS harness Go to Step
5	Measure resistance on SDM harness connector from terminal "16" and terminal "12" (ignition). Does J–39200 display "OL" (infinite)?	Go to Chart A	replace SRS harness Go to Step 6
6	1. Reconnect all components ensure all component are properly mounted. 2. Ignition switch "ON". Is passenger senslo less than 3.5 volts?	Ignition switch "OFF" Replace SDM Go to Step 7	Go to Chart A
7	1. Reconnect all components ensure all component are properly mounted. 2. Clear diagnostic trouble codes. Was this step finished?	Repeat the "SRS Diagnostic System Check"	Go to Step 7

Downloaded from www.Manualslib.com manuals search engine

DTC 21 Driver Deployment Loop Resistance High

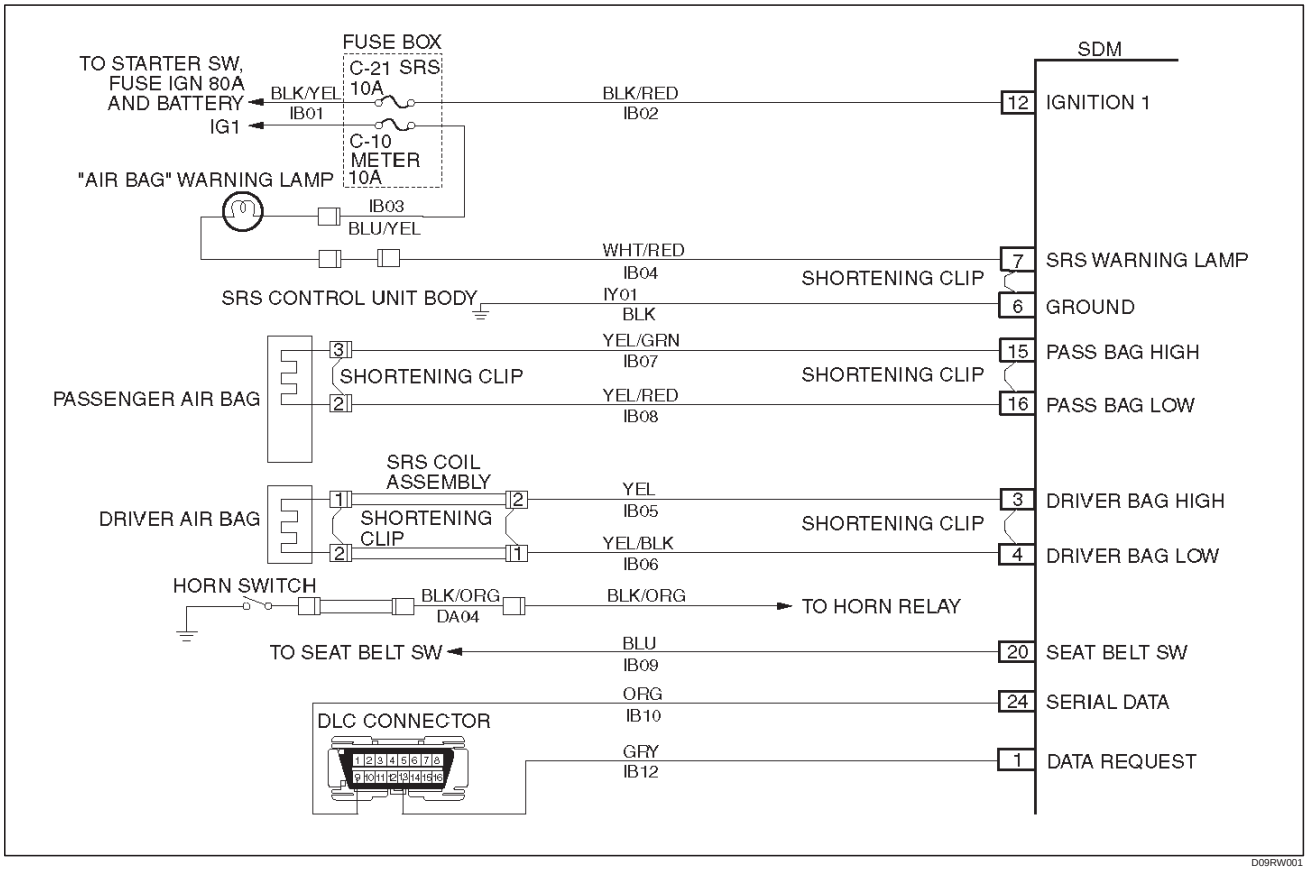

Circuit Description:

When the ignition switch is turned “ON”, the SDM will perform tests to diagnose critical malfunctions within itself. Upon passing these tests, “Ignition 1”, and deployment loop voltages are measured to ensure they are within their respective normal voltage ranges.

The SDM then proceeds with the “Resistance Measurement Test” “Driver Bag Low” terminal “4” is grounded through a current sink and the driver current source connected to “Driver Bag High” terminal “3” allows a known amount of current to flow. By monitoring the voltage difference between “Driver Bag High” and “Driver Bag Low”, the SDM calculates the combined resistance of the driver air bag assembly, SRS coil assembly, harness wiring CKTs IB05–YEL and IB06–YEL/BLK, and connector terminal contact.

DTC Will Set When:

The combined resistance of the driver air bag assembly, SRS Coil assembly, harness wiring CKTs IB05–YEL and IB06–YEL/BLK, and connector terminal contact is above a specified value. This test run once each ignition cycle during the “Resistance Measurement Test” when:

1. No “higher priority faults” are detected during “Turn–ON”
2. “Ignition 1” voltage is in the specified value.

Action Taken:

SDM turns “ON” the “AIR BAG” warning lamp and sets DTC 21.

DTC Will Clear When:

The ignition switch is turned “OFF”.

DTC Chart Test Description:

Number(s) below refer to step number(s) on the diagnostic chart:

2. This test determines whether the malfunction is in the SDM.
3. This test verifies proper connection of the yellow 2–pin connector at the base of the steering column.
4. This test checks for proper contact and/or corrosion of the 2–pin connector terminals at the base of steering column.
5. This test isolate the malfunction to one side of the SRS coil assembly yellow 2–pin connector located at the base of the steering column.
6. This test determines whether the malfunction is due to high resistance in the wiring.
7. This test determines whether the malfunction is in the SRS coil assembly or the driver air bag assembly.

Downloaded from www.Manualslib.com manuals search engine

Diagnostic Aids:

An intermittent condition is likely to be caused by a poor connection at terminals “1” and “2” of the SRS coil 2–pin connector at the base of the steering column, terminal “1” and “2” of the driver air bag assembly 2–pin connector at the top of the steering column, SDM terminals “3” and “4” or a poor wire to terminal connection in CKT IB05–YEL or IB06–YEL/BLK. The test for this diagnostic trouble code is only run while the “AIR BAG” warning lamp is performing the bulb check, unless DTC 17 or DTC 26 is detected. When a scan tool “Clear Codes” command is issued and the malfunction is still present, the DTC will not reappear until the next ignition cycle.

DTC 21 Driver Deployment Loop Resistance High

Step	Action	Yes	No
1	Perform the “SRS Diagnostic System Check”. Was the “SRS Diagnostic System Check” performed?	Go to Step 2	Repeat the “SRS Diagnostic System Check”
2	1. When measurements are requested in this chart use J–39200 DVM with correct terminal adapter from J–35616–A. 2. Use scan tool data list function, read and record the driver deployment loop resistance. Is driver resistance more than 3.7 ohms?	Go to Step 3	Go to Chart A
3	1. Ignition switch “OFF.” 2. Disconnect SRS coil assembly yellow 2–pin connector located at base of steering column is seated properly. Is the 2–pin connector connected properly?	Go to Step 4	Seat SRS coil assembly 2–pin connector properly Go to Step 8
4	1. Disconnect and inspect the SRS coil assembly yellow 2–pin connector located base of steering column. 2. If ok, reconnect the SRS coil assembly yellow 2–Pin connector. 3. Ignition switch “ON.” Is DTC 21 current?	Go to Step 5	Go to Step 8
5	1. Ignition switch “OFF.” 2. Disconnect SRS coil and passenger air bag assembly, yellow 2–pin connector located at the base of steering column and behind the glove box assembly. 3. Connect SRS driver / passenger load tool J–41433 and appropriate adapter to SRS coil and passenger air bag assembly harness connectors. 4. Ignition switch “ON.” Is DTC 21 current?	Go to Step 6	Go to Step 7
6	1. Ignition switch “Off.” 2. There has been a increase in the total circuit resistance of the driver deployment loop. 3. Use the high resolution ohmmeter mode of the DVM while checking CKTS IB05–YEL and IB06–YEL/BLK, and SDM connector terminal “3” and “4” to locate the root cause. Was a fault found?	Replace SRS harness Go to Step 8	Go to Chart A

Downloaded from www.Manualslib.com manuals search engine

DTC 21 Driver Deployment Loop Resistance High (Cont'd)

Step	Action	Yes	No
7	1. Ignition switch "OFF." 2. Disconnect SRS driver / passenger load tool from SRS coil assembly harness connector. 3. Connect SRS driver / passenger load tool J–41433 on the top of steering column. 4. Reconnect SRS coil assembly harness connector as the base of steering column. 5. Ignition switch "ON." Is DTC 21 current?	Ignition switch "OFF" Replace SRS coil assembly Go to Step 8	Ignition switch "OFF" Replace driver air bag assembly Go to Step 8
8	1. Reconnect all components ensure all component are properly mounted. 2. Clear diagnostic trouble codes. Was this step finished?	Repeat the "SRS Diagnostic System Check"	Go to Step 8

Downloaded from www.Manualslib.com manuals search engine

DTC 22 Driver Deployment Loop Resistance Low

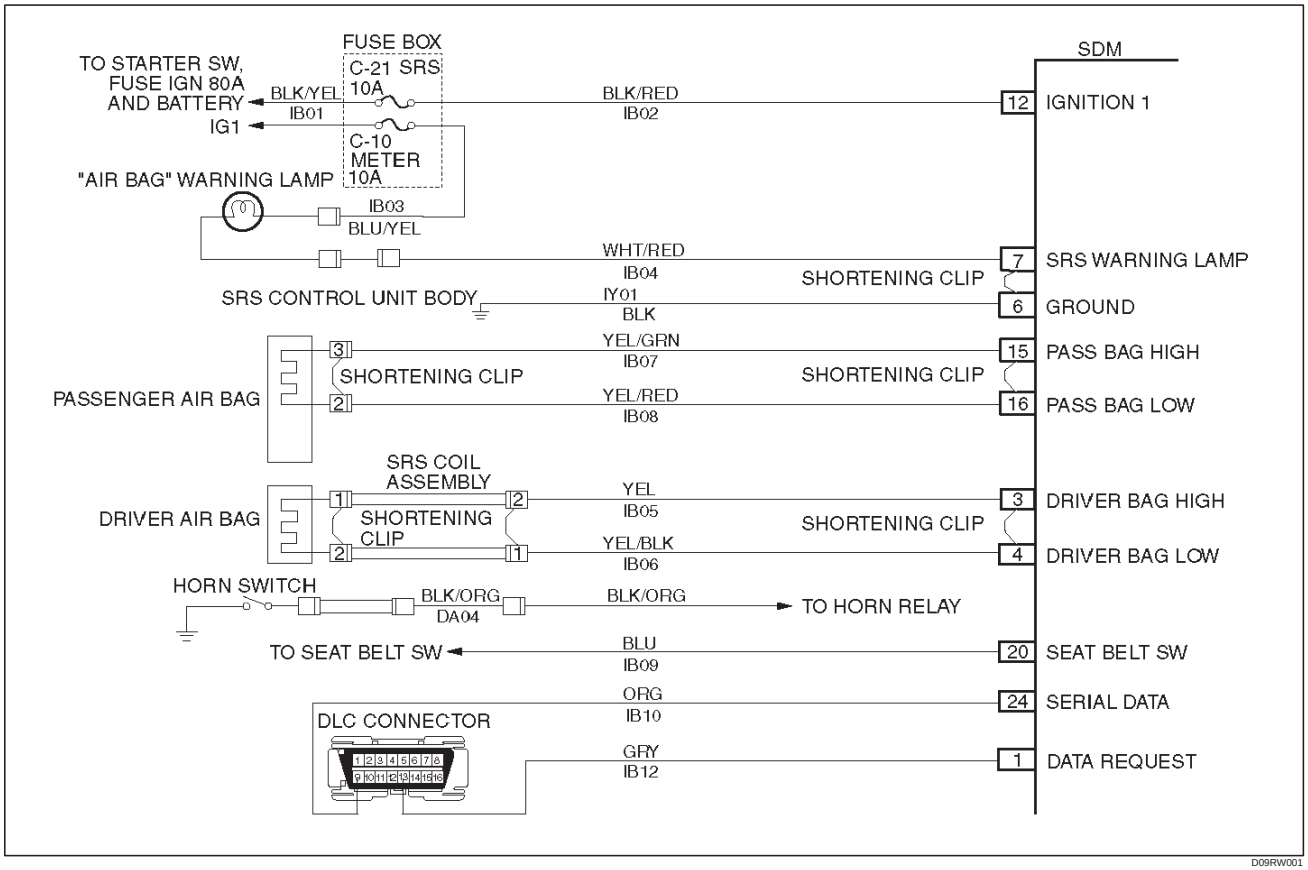

Circuit Description:

When the ignition switch is turned “ON”, the SDM will perform tests to diagnose critical malfunctions within itself. Upon passing these tests “Ignition 1”, and deployment loop voltages are measured to ensure they are within their respective normal voltage ranges.

The SDM then proceeds with the “Resistance Measurement Test” “Driver Bag Low” terminal “4” is grounded through a current sink and the driver current source connected to “Driver Bag High” terminal “3” allows a known amount of current to flow. By monitoring the voltage difference between “Driver Bag High” and “Driver Bag Low” the SDM calculates the combined resistance of the driver air bag assembly, SRS coil assembly, harness wiring CKTs IB05–YEL and IB06–YEL/BLK and connector terminal contact.

DTC Will Set When:

The combined resistance of the driver air bag assembly, SRS Coil assembly, harness wiring CKTs IB05–YEL and IB06–YEL/BLK and connector terminal contact is above a specified value. This test is run once each ignition cycle during the “Resistance Measurement Test” when:

1. No “higher priority faults” are detected during “Turn–ON”
2. “Ignition 1” voltage is in the specified value.

Action Taken:

SDM turns “ON” the “AIR BAG” warning lamp and sets DTC 22.

DTC Will Clear When:

The ignition switch is turned “OFF.”

DTC Chart Test Description:

Number(s) below refer to circled number(s) on the diagnostic chart:

2. This test determines whether the malfunction is in the SDM.
3. This test verifies proper connection of the yellow 2–pin connector at the base of the steering column.
4. This test checks for proper operation of the shorting clip in the yellow 2–pin connector.
5. This test isolate the malfunction to one side of the SRS coil assembly yellow 2–pin connector located at the base of steering column.
6. This test determines whether the malfunction is due to shortening in the wiring.
7. This test determines whether the malfunction is in the SRS coil assembly or the driver air bag assembly.

Diagnostic Aids:

An intermittent condition is likely to be caused by a short between CKT IB05–YEL or IB06–YEL/BLK or a

Downloaded from www.Manualslib.com manuals search engine

malfunctioning shorting clip on the driver air bag assembly or SRS coil assembly which would require replacement of the component. The test for this diagnostic trouble code is only run while the “AIR BAG” warning lamp is performing the bulb check, unless DTC 17 or DTC 26 is detected. When a scan tool “Clear Codes” command is issued and the malfunction is still present, the DTC will not reappear until the next ignition cycle.

DTC 22 Driver Deployment Loop Resistance Low

Step	Action	Yes	No
1	Perform the “SRS Diagnostic System Check.” WAS THE “SRS Diagnostic System Check” performed?	Go to Step 2	Go to the “SRS Diagnostic System Check”
2	1. When measurements are requested in this chart use J–39200 DVM with correct terminal adapter from J–35616–A. 2. Use scan tool data list function, read and record the driver deployment loop resistance. Is driver deployment loop resistance less than 1.7 ohms?	Go to Step 3	Go to Chart A
3	1. Ignition switch “OFF.” 2. Make sure the SRS coil assembly yellow 2–pin connector located at the base of steering column is seated properly. Is the 2–pin connector connected properly?	Go to Step 4	Seat driver air bag assembly 2–pin connector properly Go to Step 8
4	1. Disconnect and inspect the SRS coil assembly yellow 2–pin connector located base of steering column. 2. If ok, reconnect the SRS coil assembly yellow 2–pin connector. 3. Ignition switch “ON.” Is DTC 22 current?	Go to Step 5	Go to Step 8
5	1. Ignition switch “OFF.” 2. Disconnect SRS coil and passenger air bag assembly, yellow 2–pin connector located at the base of steering column and behind the glove box assembly. 3. Connect SRS driver / passenger load tool J–41433 and appropriate adapter to SRS coil and passenger air bag assembly harness connectors. 4. Ignition switch “ON.” Is DTC 22 current?	Go to Step 6	Go to Step 7
6	1. Ignition switch “OFF.” 2. There has been a decrease in the total circuit resistance of the driver deployment loop. 3. Use the high resolution ohmmeter mode of the DVM while checking CKTS IB05–YEL and IB06–YEL/BLK, and SDM connector terminal “3” and “4” to locate the root cause. Was a fault found?	Replace SRS harness Go to Step 8	Go to Chart A
7	1. Ignition switch “OFF.” 2. Disconnect SRS driver / passenger load tool from driver air bag assembly harness connector. 3. Connect SRS driver / passenger load tool J–41433 to the top of steering column 2–pin connector. 4. Reconnect SRS coil assembly harness connector as the base of steering column. 5. Ignition switch “ON.” Is DTC 22 current?	Ignition switch “OFF” Replace SRS coil assembly Go to Step 8	Ignition switch “OFF” Replace driver air bag assembly Go to Step 8
8	1. Reconnect all components, ensure all component are properly mounted. 2. Clear diagnostic trouble codes. Was this step finished?	Go to the “SRS Diagnostic System Check”	Go to Step 8

Downloaded from www.Manualslib.com manuals search engine

DTC 24 Driver Deployment Loop Short To Ground

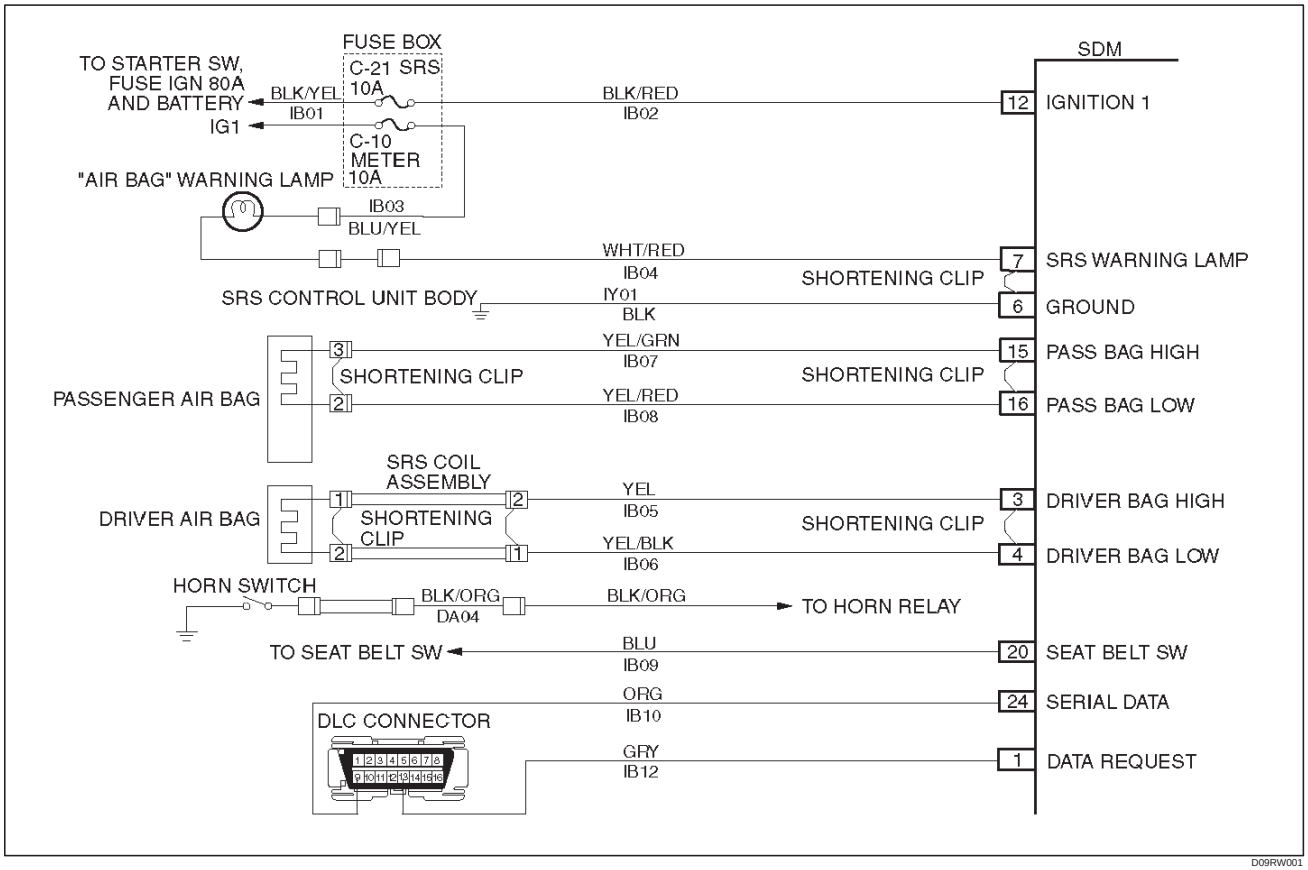

Circuit Description:

When the ignition switch is turned “ON”, the SDM will perform tests to diagnose critical malfunctions within itself. Upon passing these tests, “Ignition 1”, and deployment loop voltages are measured to ensure they are within their respective normal voltage ranges.
The SDM monitors the voltage at “Driver Bag Low” terminal “4” and “passenger Bag Low” terminal “16” to detect shorts to ground in the air bag assembly circuits.

DTC Will Set When:

Neither of the two air bag assemblies is open.
“Ignition 1” is within the normal operating voltage range.
This test is run once each ignition cycle and “Continuous Monitoring”. Once these conditions are met and the voltage at “Driver Bag Low” is below a specified value, DTC 24 will set.

Action Taken:

SDM turns “ON” the “AIR BAG” warning lamp and sets a diagnostic trouble code.

DTC Will Clear When:

The malfunction is no longer occurring and the ignition is turned “OFF”.

DTC Chart Test Description:

Number(s) below refer to step number(s) on the diagnostic chart:

2. This test determines whether the SDM is malfunctioning
3. This test isolates the malfunction to one side of the SRS coil assembly yellow 2–pin connector at the base of the steering column.
4. This test determines whether the malfunction is in CKT IB05–YEL.
5. This test determines whether the malfunction is in CKT IB06–YEL/BLK.
6. This test determines whether the malfunction is in the SRS coil assembly or the driver air bag assembly.

Diagnostic Aids:

An intermittent condition is likely to be caused by a short to ground in the driver air bag assembly circuit. Inspect CKTs IB05–YEL and IB06–YEL/BLK carefully for cutting or chafing.

Downloaded from www.Manualslib.com manuals search engine

DTC 24 Driver Deployment Loop Short To Ground

Step	Action	Yes	No
1	Was the “SRS Diagnostic System Check” performed?	Go to Step 2	Go to the “SRS Diagnostic System Check”
2	1. When measurements are requested in this chart use J–39200 DVM with correct terminal adapter from J–35616–A. 2. Ignition switch “OFF.” 3. Connect scan tool data link connector. follow directions as given in the scan tool operator’s manual. 4. Ignition switch “ON.” 5. Read driver sense LO. Is driver sense LO less than 1.5 volts?	Go to Step 3	Go to Chart A
3	1. Ignition switch “OFF.” 2. Disconnect SRS coil assembly yellow 2–pin connector located at base of the steering column. leave passenger air bag assembly connected. 3. Connect SRS driver / passenger load tool J–41433 and appropriate adapter to SRS coil assembly harness connector. 4. ignition switch “ON.” Is DTC 24 current?	Go to Step 4	Go to Step 6
4	1. Ignition switch “OFF.” 2. Disconnect SDM. 3. Disconnect SRS driver / passenger load tool. 4. Measure resistance on SDM harness connector “3” to terminal “6” (ground). Does J–39200 display “OL” (infinite)?	Go to Step 5	Replace SRS harness Go to Step 7
5	measure resistance on SDM harness connector from terminal “4” to terminal “6” (ground). Does J–39200 display “OL” (infinite)?	Go to Chart A	Replace SRS harness Go to Step 7
6	1. Ignition switch “OFF.” 2. Disconnect SRS driver / passenger load tool J–41433 from SRS coil assembly harness connector. 3. connect SRS driver / passenger load tool J–41433 and appropriate adapter J–35616–A to driver air bag assembly harness connector. located top of the steering column 2–pin connector. 4. Reconnect SRS coil assembly harness connector as the base of steering column. 5. Ignition switch “ON.” Is DTC 24 current?	Ignition switch “OFF” Replace SRS coil assembly Go to Step 7	Ignition switch “OFF” Replace driver air bag assembly Go to Step 7
7	1. Reconnect all components ensure all component are properly mounted. 2. Clear diagnostic trouble codes. Was this step finished?	Go to the “SRS Diagnostic System Check”	Go to Step 7

Downloaded from www.Manualslib.com manuals search engine

DTC 25 Driver Deployment Loop Short To Voltage

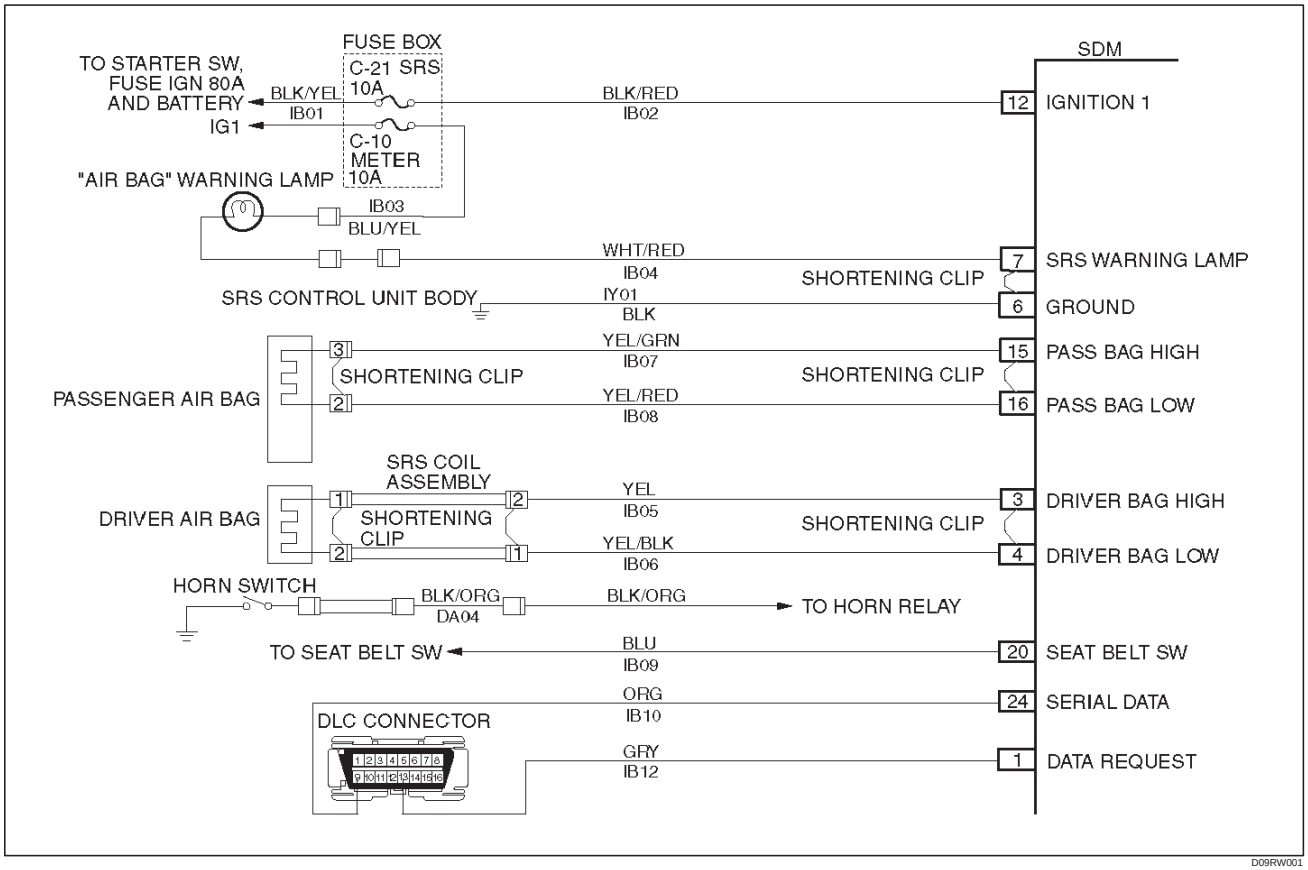

Circuit Description:

When the ignition switch is turned “ON”, the SDM will perform tests to diagnose critical malfunctions within itself. Upon passing these tests, “Ignition 1”, and deployment loop voltages are measured to ensure they are within their respective normal voltage ranges.
The SDM monitors the voltage at “Driver Bag Low” terminal “4” and “Passenger Bag Low” terminal “16” to detect shorts to B+ in the air bag assembly circuits.

DTC Will Set When:

“Ignition 1” is in the normal operating voltage range. This test is run once each ignition cycle and “Continuous monitoring”. Once these conditions are met and the voltage at “Driver Bag Low” is above a specified value, DTC 25 will set.

Action Taken:

SDM turns “ON” the “AIR BAG” warning lamp and sets DTC 25 and also DTC 71

DTC Will Clear When:

The SDM is replaced.

DTC Chart Test Description:

Number(s) below refer to step number(s) on the diagnostic chart:

2. This test determines whether the SDM is malfunctioning.
3. This test isolates the malfunction to one side of the driver air bag assembly yellow 2–pin connector at the base of steering column.
4. This test determines whether the malfunction is in CKT IB05–YEL.
5. This test determines whether the malfunction is in CKT IB06–YEL/BLK.
6. This test determines whether the malfunction is in the SRS coil assembly or the driver air bag assembly.

Diagnostic Aids:

An intermittent condition is likely to be caused by a short to B+ in the driver air bag assembly circuit. Inspect CKTs IB05–YEL and IB06–YEL/BLK carefully for cutting or chafing. If the wiring pigtail of the driver air bag assembly and SRS coil assembly is damaged, the components must be replaced. A careful inspection of CKT IB05–YEL and IB06–YEL/BLK, including the SRS coil assembly and driver air bag assembly is essential to ensure that the replacement SDM will not be damaged.

Downloaded from www.Manualslib.com manuals search engine

DTC 25 Driver Deployment Loop Short To Ignition

CAUTION: When DTC 25 has been set, it is necessary to replace the SDM. Setting DTC 25 will also cause DTC 71 to set. When a scan tool "CLEAR CODES" command is issued and the malfunction is no longer present, DTC 71 will remain current. Ensure that the short to voltage condition is repaired prior to installing a replacement SDM to avoid damaging the SDM.

Step	Action	Yes	No
1	Was the "SRS Diagnostic System Check" performed?	Go to Step 2	Go to the "SRS Diagnostic System Check"
2	1. When measurements are requested in this chart use J–39200 DVM with correct terminal adapter from J–35616–A. Ignition switch "OFF." Connect scan tool data link connector. follow directions as given in the scan tool operator's manual. 2. Ignition switch "ON." 3. Read driver sense LO . Is driver sense LO more than 3.5 volts?	Go to Step 3	Go to Chart A
3	1. Ignition switch "OFF." 2. Disconnect SRS coil assembly yellow 2–pin connector at the base of the steering column. leave passenger air bag assembly connected. 3. Connect SRS driver /passenger load tool J–41433 and appropriate adapter to SRS coil assembly harness connector. 4. Ignition switch "ON." Is driver sense LO more than 3.5 volts?	Go to Step 4	Go to Step 6
4	1. Ignition switch "OFF." 2. Disconnect SDM. 3. Disconnect SRS driver /passenger load tool. 4. Measure resistance on SDM harness connector "3" to terminal "12" (ignition). Does J–39200 display "OL" (infinite)?	Go to Step 5	Replace SRS harness Go to Step 7
5	Measure resistance on SDM harness connector from terminal "4" to terminal "12" (ignition). Does J–39200 display "OL" (infinite)?	Go to Chart A	Replace SRS harness Go to Step 7
6	1. Ignition switch "OFF." 2. Disconnect SRS driver / passenger load tool J–41433 and appropriate adapter J–35616–A to driver air bag assembly harness 2-pin connector located at top of the steering column. 3. Reconnect SRS coil assembly harness connector as the base of steering column. 4. Ignition switch "ON." Is driver sense LO more than 3.5 volts?	Ignition switch "OFF" Replace SRS coil assembly Go to Step 7	Ignition switch "OFF" Replace driver air bag assembly Go to Step 7
7	1. Reconnect all components, ensure all component are properly mounted. 2. Ignition switch "ON." Is passenger senslo less than 3.5 volts?	Ignition switch "OFF" Replace SDM Go to Step 8	Go to Chart A
8	1. Reconnect all components ensure all component are properly mounted. 2. Clear diagnostic trouble codes. Was this step finished?	Go to the "SRS Diagnostic System Check"	Go to Step 8

Downloaded from www.Manualslib.com manuals search engine

DTC 26 Driver Deployment Loop Open

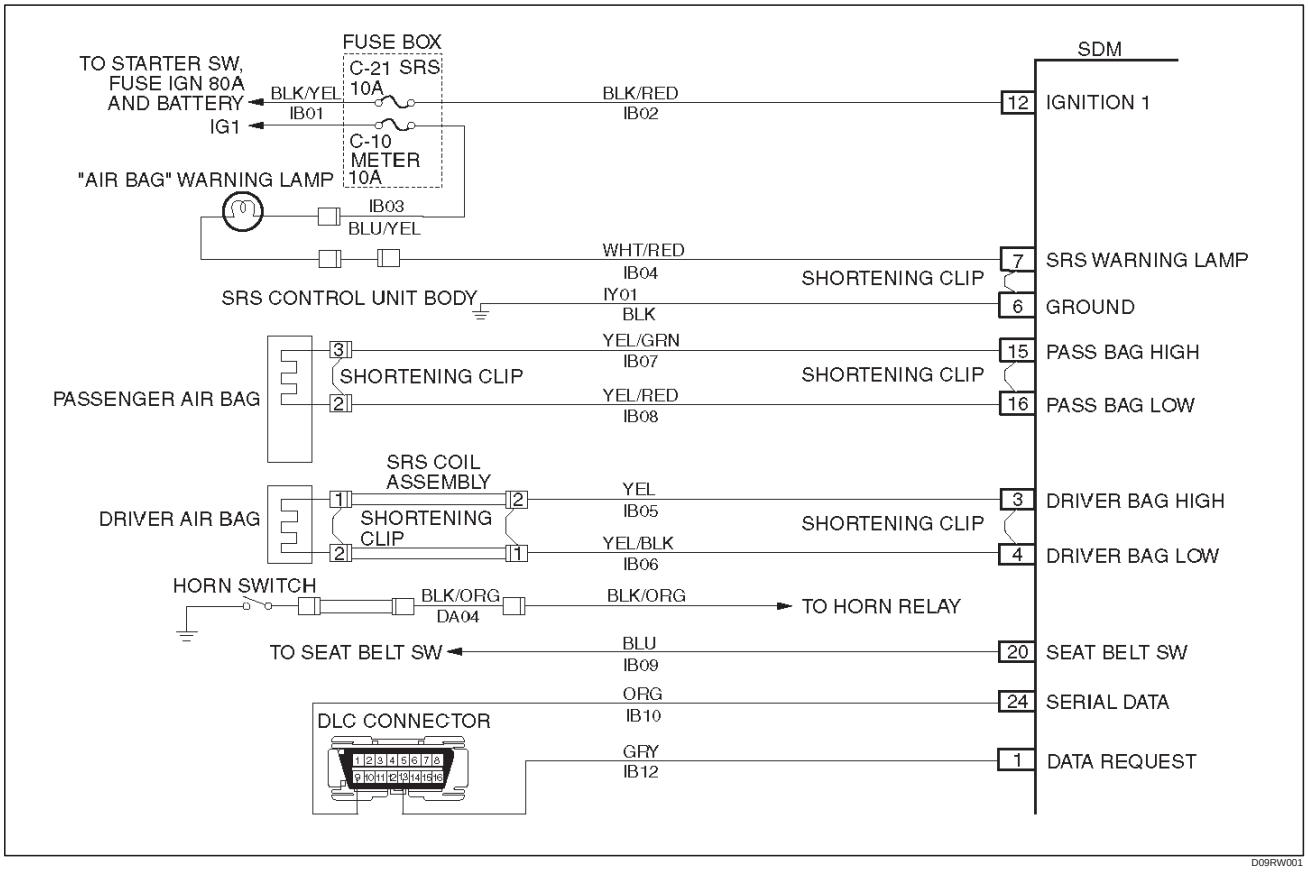

Circuit Description:

When the ignition switch is turned “ON”, the SDM will perform tests to diagnose critical malfunctions within itself. Upon passing these tests, “Ignition 1”, and deployment loop voltages are measured to ensure they are within their respective normal voltage ranges.

During “Continuous Monitoring” diagnostics, a fixed amount of current is following in the deployment loop. This produces proportional voltage drops in the loop. By monitoring the voltage difference between “Driver Bag High” and “Driver Bag Low”, the SDM calculates the combined resistance of the driver air bag assembly, SRS coil assembly, harness wiring CKTs IB05–YEL and IB06–YEL/BLK, and connector terminal contact.

DTC Will Set When:

The voltage difference between “Driver Bag High” terminal “3” and “Driver Bag Low” terminal “4” is above or equal to a specified value for 500 milliseconds during “Continuous Monitoring”.

Action Taken:

SDM turns “ON” the “AIR BAG” warning lamp and sets a diagnostic trouble code.

DTC Will Clear When:

The voltage difference between “Driver Bag High” terminal “3” and “Driver Bag Low” terminal “4” is below a specified value for 500 milliseconds during “Continuous Monitoring”.

DTC Chart Test Description:

Number(s) below refer to step number(s) on the diagnostic chart:

2. This test determines whether the malfunction is in the SDM.
3. This test verifies proper connection of the yellow 2–pin connector at the base of the steering column.
4. This test checks for proper contact and/or corrosion of the yellow 2–pin connector at the base of the steering column.
5. This test isolates the malfunction to one side of the SRS coil assembly yellow 2–pin connector located at the base of steering column.
6. This test determines whether the open is in the wiring.
7. This test determines whether the malfunction is in the SRS coil assembly or the driver air bag assembly.

Diagnostic Aids:

An intermittent condition is likely to be caused by a poor connection at the driver air bag assembly harness 2–pin connector terminals “1” and “2” at the top of the steering column, SRS coil assembly harness 2–pin connection terminals “1” and “2”, SDM terminals “3” and “4”, or an open in CKTs IB05–YEL and IB06–YEL/BLK.

Downloaded from www.Manualslib.com manuals search engine

DTC 26 Driver Deployment Loop Open

Step	Action	Yes	No
1	Was the “SRS Diagnostic System Check” performed?	Go to Step 2	Go to the “SRS Diagnostic System Check”
2	1. When measurements are requested in this chart use J-39200 DVM with correct terminal adapter from J–35616–A. 2. use scan tool data list function, read and record the driver differential voltage. Is driver VDIF more than 4 volts?	Go to Step 3	Go to Chart A
3	1. Ignition switch “OFF.” 2. Make sure the SRS coil assembly yellow 2–pin connector located at the base of steering column is seated properly. Is the yellow 2–pin connector connected properly?	Go to Step 4	Seat driver air bag assembly 2–pin connector Go to Step 8
4	1. Disconnect and inspect the SRS coil assembly yellow 2–pin connector located base of steering column. 2. If ok, reconnect the SRS coil assembly yellow 2–pin connector. 3. Ignition switch “ON.” Is DTC 26 current?	Go to Step 5	Go to Step 8
5	1. Ignition switch “OFF”. 2. Disconnect SRS coil and passenger air bag assembly, yellow 2–pin connector located at the base of steering column and behind the glove box assembly. 3. Connect SRS driver/passenger load tool J–41433 and appropriate adapter to SRS coil and passenger air bag assembly harness connectors. 4. Ignition switch “ON.” Is DTC 26 current?	Go to Step 6	Go to Step 7
6	1. Ignition switch “OFF.” 2. there has been an open circuit in the driver inflator deployment loop. 3. use the high resolution ohmmeter mode of the DVM while checking CKTS IB05–YEL and IB06–YEL/BLK, and SDM connector terminal “3” and “4” to locate the root cause. Was a fault found?	Replace SRS harness Go to Step 8	Go to Chart A
7	1. Ignition switch “OFF.” 2. Disconnect SRS driver / passenger load tool from SRS coil assembly harness connector. 3. connect SRS driver / passenger load tool J–41433 on steering column 2–pin connector. 4. Reconnect SRS coil assembly harness connector at the base of steering column. 5. Ignition switch “ON.” IS DTC 26 CURRENT?	Ignition switch “OFF” Replace SRS coil assembly Go to Step 8	Ignition switch “OFF” Replace driver air bag assembly Go to Step 8
8	1. Reconnect all components ensure all component are properly mounted. 2. Clear diagnostic trouble codes. Was this step finished?	Repeat the “SRS Diagnostic System Check”	Go to Step 8

Downloaded from www.Manualslib.com manuals search engine

DTC 51 Deployment Event Commanded

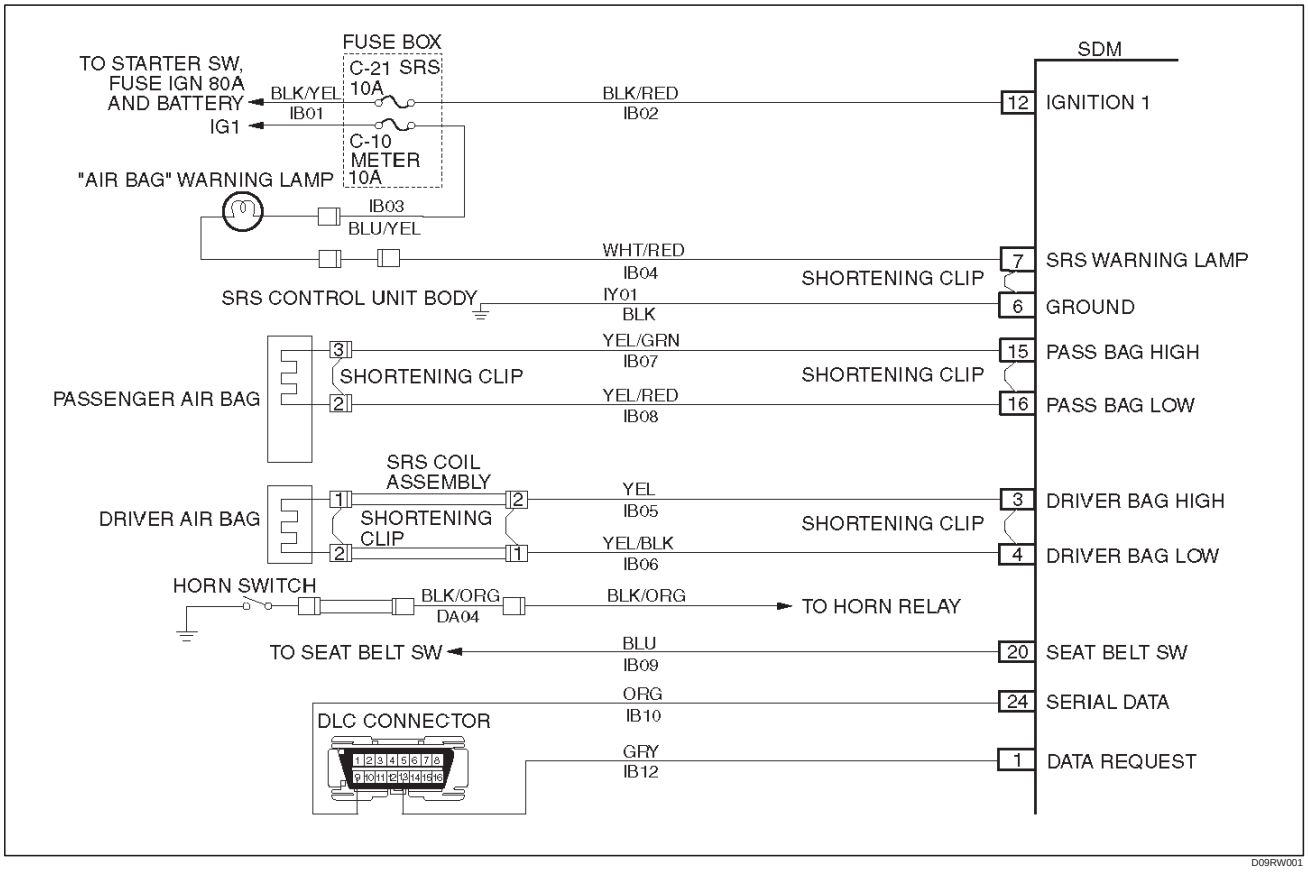

Circuit Description:

The SDM contains a sensing device which converts vehicle velocity changes to an electrical signal. The electrical signal generated is processed by the SDM and then compared to a value stored in memory. When the generated signal exceeds the stored value, the SDM will cause current to flow through the air bag assembly deploying the air bags and causing DTC 51 to set.

DTC Will Set When:

The SDM detects a frontal crash, up to 30 degrees off the centerline of the vehicle, of sufficient force to warrant deployment of the air bags.

Action Taken:

SDM turns “ON” the “AIR BAG” warning lamp records “Crash Data”, and sets a diagnostic trouble code.

DTC Will Clear When:

The SDM is replaced.

DTC Chart Test Description:

Number(s) below refer to step number(s) on the diagnostic chart:

2. If air bag assembly (s) has not deployed, DTC 51 may have falsely set.
3. If DTC 51 has set with no signs of frontal impact, the diagnostic trouble code has falsely set.

Downloaded from www.Manualslib.com manuals search engine

DTC 51 Deployment Event Commanded

WARNING: DURING SERVICE PROCEDURES. BE VERY CAREFUL WHEN HANDLING A SENSING AND DIAGNOSTIC MODULE (SDM). NEVER STRIKE OR JAR THE SDM. NEVER POWER UP THE SRS WHEN THE SDM IS NOT RIGIDLY ATTACHED TO THE VEHICLE. ALL SDM AND MOUNTING BRACKET FASTENERS MUST BE CAREFULLY TORQUED AND THE ARROW MUST BE POINTING TOWARD THE FRONT OF THE VEHICLE TO ENSURE PROPER OPERATION OF THE SRS. THE SDM COULD BE ACTIVATED WHEN POWERED WHILE NOT RIGIDLY ATTACHED TO THE VEHICLE WHICH COULD CAUSE DEPLOYMENT AND RESULT IN PERSONAL INJURY.

Step	Action	Yes	No
1	Was the “SRS Diagnostic System Check” performed?	Go to Step 2	Go to the “SRS Diagnostic System Check”
2	Ignition switch “OFF.” Have air bag assemblies deployed?	Replace components and perform inspections as directed in “repairs and inspections required after an accident” in this section clear diagnostic trouble codes Repeat “SRS Diagnostic System Check”	Go to Step 3
3	Inspect front of vehicle and undercarriage for sings of impact. Were signs of impact found?	Replace components and perform inspections as directed in “Repairs and Inspections Required After An Accident” in this section Clear diagnostic trouble codes Repeat “SRS Diagnostic System Check”	Ignition switch “OFF” Replace SDM Reconnect all SRS system components, ensure all components are properly mounted Repeat “SRS Diagnostic System Check”

Downloaded from www.Manualslib.com manuals search engine

DTC 53 Deployment Commanded With Deployment Loop Fault Or Energy Reserves Out Of Range

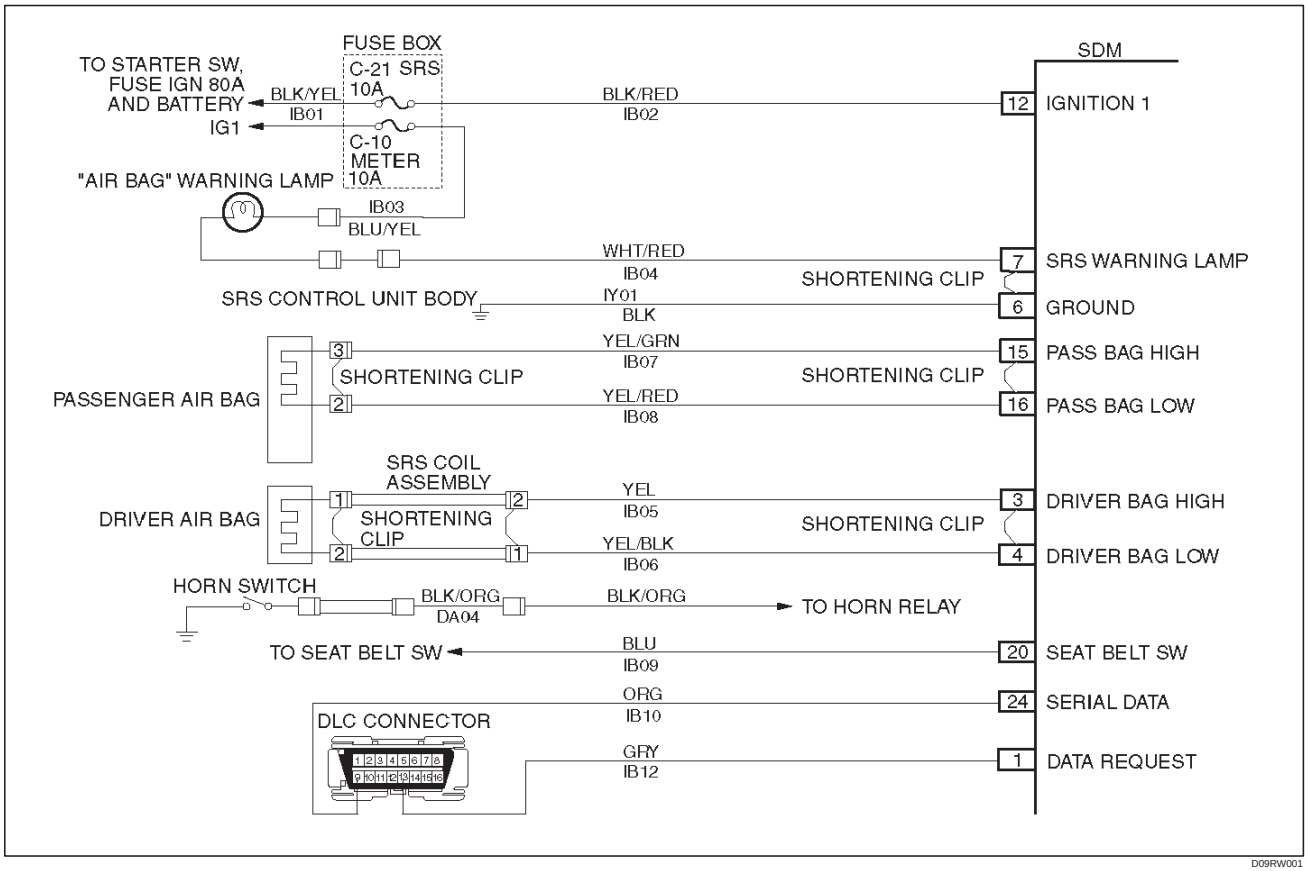

Circuit Description:

The SDM contains a sensing drive which converts vehicle velocity changes to an electrical signal. The electrical signal generated is processed by the SDM and then compared to a value stored in memory. When the generated signal exceeds the stored value, the SDM will cause current to flow through the air bag assembly deploying the air bags. DTC 53 is set accompanying with DTC 51 when a deployment occurs while an air bag assembly circuit fault is present that could possible result in a no deployment situation in one or both air bag assemblies.

DTC Will Set When:

The SDM detects a frontal crash, up to 30 degrees off the centerline of the vehicle, of sufficient force to warrant deployment of the air bags and an inflator circuit fault is present..

Action Taken:

SDM turns “ON” the “AIR BAG” warning lamp records “Crash Data”, and sets a diagnostic trouble code.

DTC Will Clear When:

The SDM is replaced. If DTC 53 is set, one or more DTCs will be set in addition to DTC 53. Malfunction(s) setting DTC(s) (other than DTC 71) must be repaired so that DTC(s) will not be set when a new SDM is installed.

DTC Chart Test Description:

Number(s) below refer to step number(s) on the diagnostic chart:

2. If air bag assembly have not deployed, DTC 53 may have falsely set.
3. If DTC 53 has set with no signs of frontal impact, the diagnostic trouble code has falsely set.

Downloaded from www.Manualslib.com manuals search engine

DTC 53 Deployment Commanded WITH Deployment Loop Fault Or Energy Reserves Out Of Range

WARNING: DURING SERVICE PROCEDURES. BE VERY CAREFUL WHEN HANDLING A SENSING AND DIAGNOSTIC MODULE (SDM). NEVER STRIKE OR JAR THE SDM. NEVER POWER UP THE SRS WHEN THE SDM IS NOT RIGIDLY ATTACHED TO THE VEHICLE. ALL SDM AND MOUNTING BRACKET FASTENERS MUST BE CAREFULLY TORQUED AND THE ARROW MUST BE POINTING TOWARD THE FRONT OF THE VEHICLE TO ENSURE PROPER OPERATION OF THE SRS. THE SDM COULD BE ACTIVATED WHEN POWERED WHILE NOT RIGIDLY ATTACHED TO THE VEHICLE WHICH COULD CAUSE DEPLOYMENT AND RESULT IN PERSONAL INJURY.

Step	Action	Yes	No
1	Was the “SRS Diagnostic System Check” performed?	Go to Step 2	Go to the “SRS Diagnostic System Check”
2	Ignition switch “OFF.” Have air bag assembles deployed?	Replace components and perform inspections as directed in “Repairs And Inspections Required After An Accident” in this section Clear diagnostic trouble codes Repeat the “SRS Diagnostic System Check”	Go to Step 3
3	Inspect front of vehicle and undercarriage for signs of impact. Were signs of impact found?	Replace components and perform inspections as directed in “Repairs And Inspections Required After An Accident” in this section Clear diagnostic trouble codes Repeat “SRS Diagnostic System Check”	Ignition switch “OFF” Replace SDM Reconnect all SRS system components, ensure all components are properly mounted Repeat the “SRS Diagnostic System Check”

Downloaded from www.Manualslib.com manuals search engine

DTC 61 Warning Lamp Circuit Failure

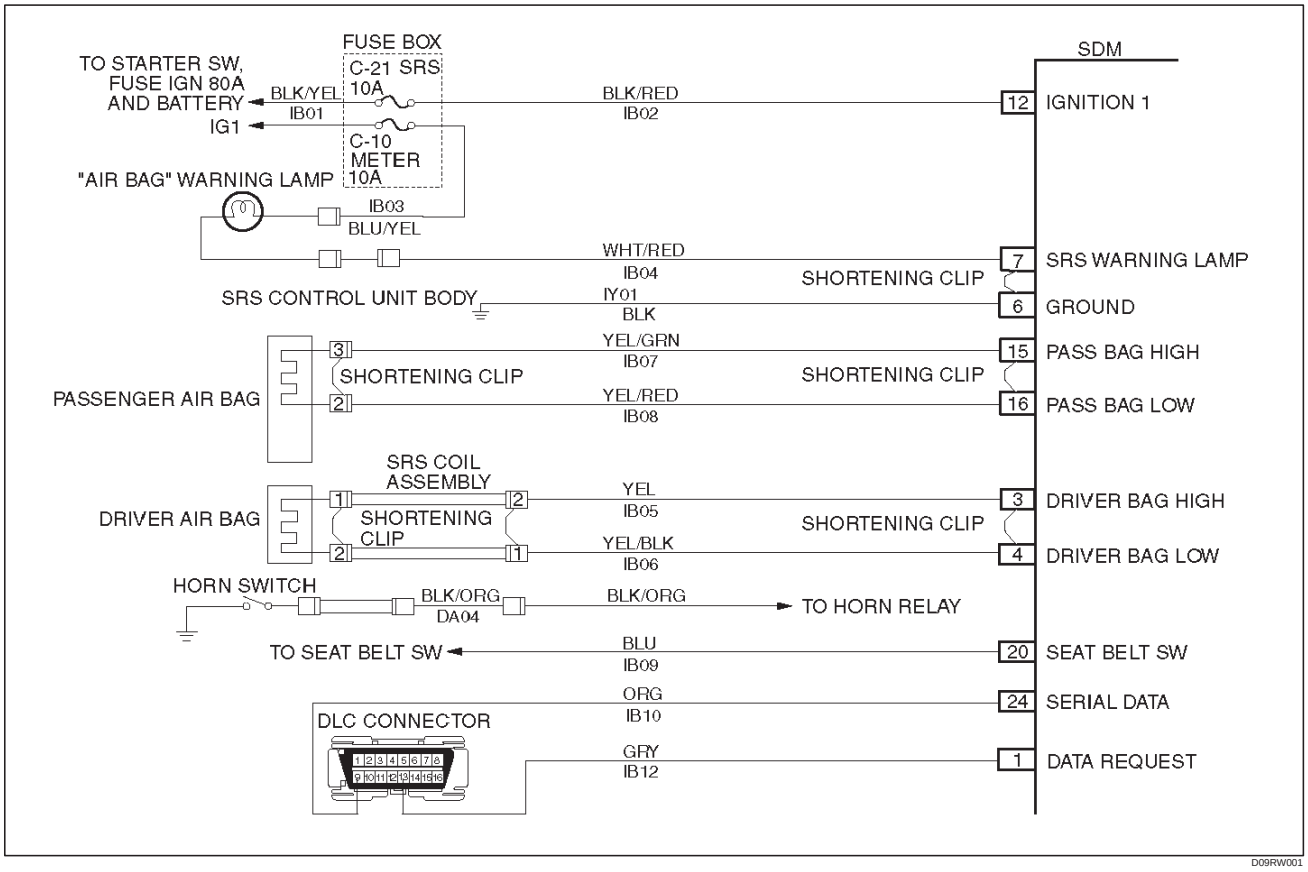

Circuit Description:

When the ignition switch is turned “ON”, battery voltage is applied to the “AIR BAG” warning lamp and to the “Ignition 1” input terminal “12”. The SDM responds by flashing the “AIR BAG” warning lamp seven times. The SDM monitors the lamp driver output by comparing the output state at “SRS Warning Lamp” terminal “7” to the microprocessor commanded state. When “Ignition 1” is in the specified value, and the output state does not match the commanded state of the lamp driver for 500 milliseconds, DTC 61 is set.

DTC Will Set When:

“Ignition 1” voltage is in the specified value and the output state at the “SRS Warning Lamp” terminal does not match the commanded state of the lamp driver for 500 milliseconds. This test is run every 100 milliseconds during “Continuous Monitoring” tests and once per each ignition cycle at the beginning.

Action Taken:

SDM attempts to turn “ON” the “AIR BAG” warning lamp and sets a diagnostic trouble code.

DTC Will Clear When:

The ignition switch is turned “OFF.”

Diagnostic Aids:

Refer to Charts B and C to diagnose warning lamp circuit malfunctions.

Downloaded from www.Manualslib.com manuals search engine

DTC 61 Warning Lamp Circuit Failure

Step	Action	Yes	No
1	Was the “SRS Diagnostic System Check” performed?	Go to Step 2	Go to the “SRS Diagnostic System Check.”
2	1. Malfunctions within the “AIR BAG” warning lamp circuitry will set this diagnostic trouble code. 2. These malfunctions are addressed in the “SRS Diagnostic System Check” via Chart B and Chart C. 3. Failure to properly perform the “SRS Diagnostic System Check” may result in misdiagnosis. 4. Ignition switch “ON.” 5. Clear SRS diagnostic trouble codes. IS DTC 61 set?	Ignition switch “OFF.” Go to Chart A.	Repeat the “SRS Diagnostic System Check.”

Downloaded from www.Manualslib.com manuals search engine

DTC 71 Internal SDM Fault

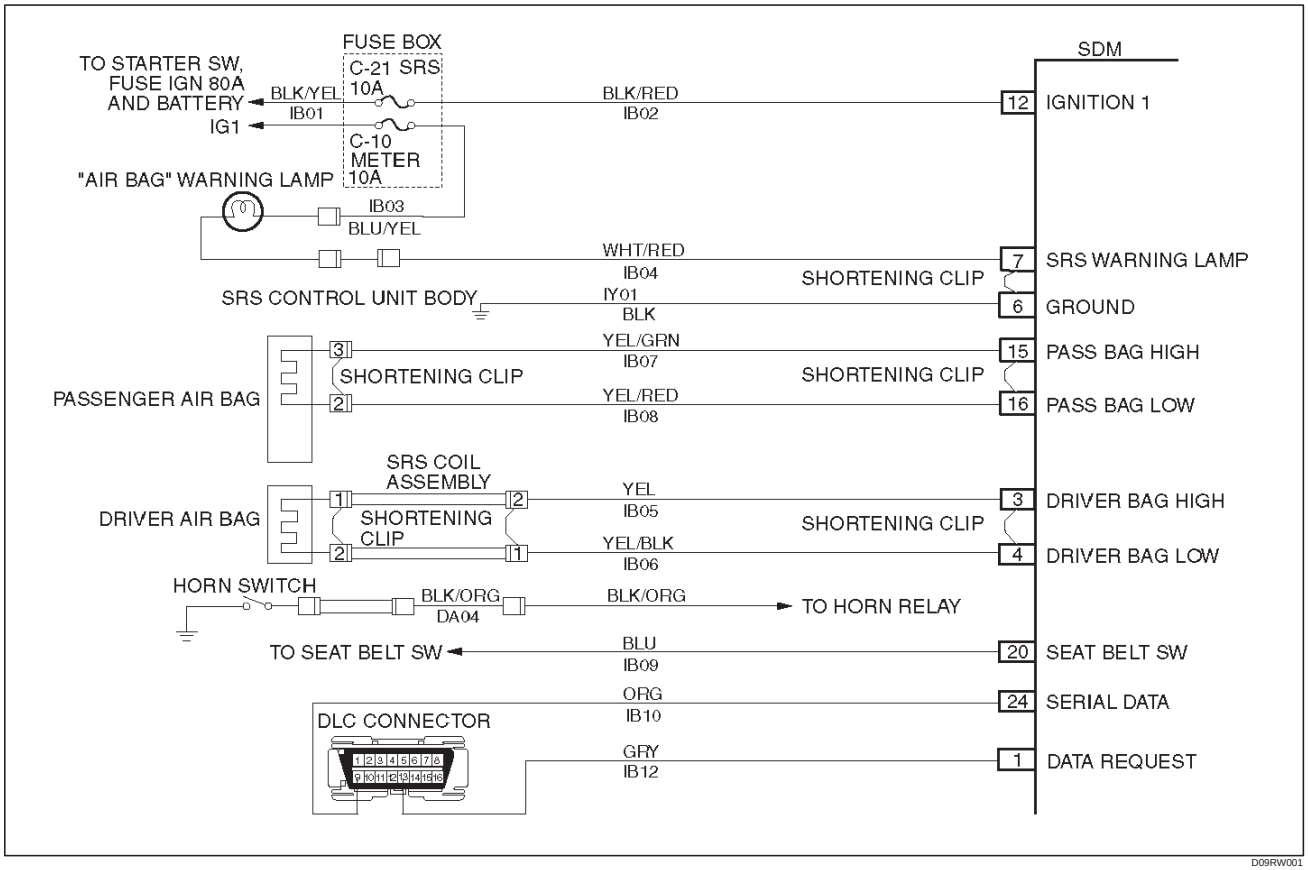

Circuit Description:

DTC 71 is an indication of a potential internal SDM malfunction and will set if any of the following conditions are detected:

1) Deployment or microprocessor energy reserve failure.
2) EEPROM failure.
3) ROM failure.
4) RAM failure.
5) Calibration check sum failure.
6) Deployment switch faults.
7) Accelerometer fault.
8) Arming sensor fault.
9) Diagnostic current faults.
10) DTC 19
11) DTC 25
12) DTC 51
13) DTC 53

DTC Will Set When:

Any of the above indicated malfunctions are detected by the SDM. The malfunctions described above are tested mainly during “Continuous Monitoring” and some ones run each ignition cycle.

Action Taken:

SDM turns “ON” the “AIR BAG” warning lamp and sets a diagnostic trouble code.

DTC Will Clear When:

A scan tool “Clear Codes” commanded is received by the SDM. Some of the indicated malfunctions will only allow the “AIR BAG” warning lamp to go out.
But when DTC 19, 25, 51, 53 are also set, SDM is replaced.

Downloaded from www.Manualslib.com manuals search engine

DTC 71 Internal SDM Fault

WARNING: DURING SERVICE PROCEDURES. BE VERY CAREFUL WHEN HANDLING A SENSING AND DIAGNOSTIC MODULE (SDM). NEVER STRIKE OR JAR THE SDM. NEVER POWER UP THE SRS WHEN THE SDM IS NOT RIGIDLY ATTACHED TO THE VEHICLE. ALL SDM AND MOUNTING BRACKET FASTENERS MUST BE CAREFULLY TORQUED AND THE ARROW MUST BE POINTING TOWARD THE FRONT OF THE VEHICLE TO ENSURE PROPER OPERATION OF THE SRS. THE SDM COULD BE ACTIVATED WHEN POWERED WHILE NOT RIGIDLY ATTACHED TO THE VEHICLE WHICH COULD CAUSE DEPLOYMENT AND RESULT IN PERSONAL INJURY.

CAUTION: When DTC 19 or 25 has been set, it is necessary to replace the SDM. Setting DTC 19 and 25 or 51 or 53 will also cause DTC 71 to set. When a scan tool "CLEAR CODES" command is issued and the malfunction is no longer present, DTC 51 or 53 and DTC 71 will remain current. Ensure that the short to voltage condition DTC 19, 25 is repaired prior to installing a replacement SDM to avoid damaging the SDM.

Step	Action	Yes	No
1	Was the "SRS Diagnostic System Check" performed?	Go to Step 2	Go to the "SRS Diagnostic System Check"
2	Note SRS "Diagnostic System Check." Is DTC 19 or 25 or 51 or 53 also set (CURRENT OR HISTORY)? (refeer to notice above.)	Go to DTC 19 if DTC 19 is set Go to DTC 25 if DTC 25 is set Go to DTC 51 if DTC 51 is set Go to DTC 53 if DTC 53 is set	Ignition switch "OFF" Replace SDM Repeat the "SRS Diagnostic System Check"

Downloaded from www.Manualslib.com manuals search engine

TROOPER

CONTROL SYSTEM

CRUISE CONTROL SYSTEM

CONTENTS

Service Precaution 10A–1
General Description 10A–1
Brake Switch 10A–2
Removal 10A–2
Installation 10A–2
Adjustment 10A–3
Clutch Switch 10A–3
Removal and Installation 10A–3
Adjustment 10A–3
Starter Switch 10A–4
Removal 10A–4
Installation 10A–4
Cruise Control Main Switch 10A–5
Removal 10A–5
Installation 10A–5
Cruise Control Switch (Combination Switch) 10A–5
Removal and Installation 10A–5
Powertrain Control Module (PCM) 10A–5
Removal and Installation 10A–5
Mode Switch 10A–5
Removal and Installation 10A–5
Diagnosis 10A–6

Service Precaution

WARNING: THIS VEHICLE HAS A SUPPLEMENTAL RESTRAINT SYSTEM (SRS). REFER TO THE SRS COMPONENT AND WIRING LOCATION VIEW IN ORDER TO DETERMINE WHETHER YOU ARE PERFORMING SERVICE ON OR NEAR THE SRS COMPONENTS OR THE SRS WIRING. WHEN YOU ARE PERFORMING SERVICE ON OR NEAR THE SRS COMPONENTS OR THE SRS WIRING, REFER TO THE SRS SERVICE INFORMATION. FAILURE TO FOLLOW WARNINGS COULD RESULT IN POSSIBLE AIR BAG DEPLOYMENT, PERSONAL INJURY, OR OTHERWISE UNNEEDED SRS SYSTEM REPAIRS.

CAUTION: Always use the correct fastener in the proper location. When you replace a fastener, use ONLY the exact part number for that application. ISUZU will call out those fasteners that require a replacement after removal. ISUZU will also call out the fasteners that require thread lockers or thread sealant. UNLESS OTHERWISE SPECIFIED, do not use supplemental coatings (Paints, greases, or other corrosion inhibitors) on threaded fasteners or fastener joint interfaces. Generally, such coatings adversely affect the fastener torque and the joint clamping force, and may damage the fastener. When you install fasteners, use the correct tightening sequence and specifications. Following these instructions can help you avoid damage to parts and systems.

General Description

The cruise control keeps the vehicle running at a fixed speed until a signal canceling this fixed speed is received . When the main switch “AUTO CRUISE” is turned on with the vehicle in the running mode, the battery voltage is applied to the control unit. When a signal from the control switch is input to the PCM while the vehicle is in this state, the cruise control system is activated. Also, while the system is operating, the “AUTO CRUISE” indicator light in the meter assembly lights up.

1. SET/COAST Switch Function

1. **Set Function:** When the SET/COAST switch is pressed and released with the main switch on, the speed at which the vehicle is running at that moment is stored in the memory, and the vehicle automatically runs at the stored speed.
2. **Coast-down Function:** When the SET/COAST switch is kept on while the vehicle in running, the vehicle decelerates during that time. The speed at which vehicle is running when the control switch is turned off is stored in the memory, and the vehicle automatically returns to the stored speed.
3. **Tap-down Function:** When the SET/COAST switch is turned on and off instantaneously while the vehicle is running, the vehicle decelerates a mile for each on/off operation. The vehicle speed at which the vehicle was running when the SET/COAST was turned off last is stored in the memory, and the vehicle automatically returns to this stored speed.

Downloaded from www.Manualslib.com manuals search engine

2. RESUME/ACCEL Switch Function

1. **Resume Function:** When the RESUME/ACCEL switch is turned on/off after the system is temporarily deactivated by pressing the brake or clutch pedal while the vehicle is running, the vehicle resumes the speed stored before the system was released, and the vehicle automatically runs at the stored speed .
2. **Accelerate Function:** When the RESUME/ACCEL switch is kept on after the system is released completely, the vehicle accelerates its speed during that time. The vehicle speed at which the vehicle was running when the switch was turned off is stored in the memory, and the vehicle automatically returns to this speed.
3. **Tap-up Function:** When the RESUME/ACCEL switch is turned on and off instantaneously while the vehicle is running, the vehicle accelerates a mile for each on/off operation. The vehicle speed at which the vehicle was running when the switch was turned off last is stored in the memory, and the vehicle automatically returns to this stored speed.

3. CANCEL Function

1. **Temporary Cancellation:**
   - When the cancel switch is turned on.
   - When the brake pedal is pressed.
   - When the clutch pedal is pressed. (M/T)
   - When the select lever is shifted to any position other than “D”, “3”, “2” or “L”. (A/T)
   - When the cancel switch is operated.
   - When the vehicle speed exceeds about 12.5mph over the vehicle speed stored in the memory.
   - Turning the RESUME/ACCEL switch will return the vehicle to the speed stored in the cruise control memory.
   - When the vehicle speed gets lower than 20 mph (32 km/h).
2. **Complete Cancellation:**
   - When the starter switch or the main switch is turned off.
   - When the fail-safe function is activated.
   - When the vehicle speed is about 24 mph.

Brake Switch

Removal

1. Disconnect the battery ground cable.
2. Remove the brake switch (1).
   - Disconnect the connector.
   - Loosen the lock nuts of the switch.
   - Remove the switch by turning it.

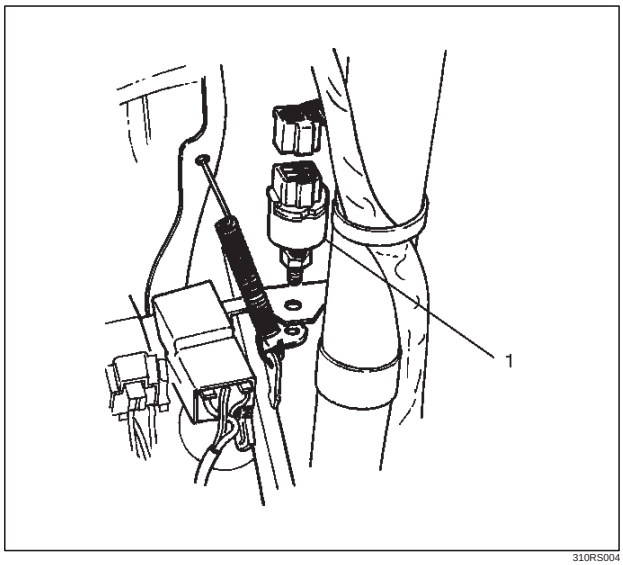

310RS004

Installation

To install, follow the removal steps in the reverse order, noting the following points.

1. Check to see if the brake pedal has been returned by the return spring to the specified position.
2. Turn the switch clockwise until the tip of the threaded portion of the brake switch contacts the pedal arm.
3. Turn the switch counterclockwise until the space between the tip of the threaded portion and the pedal arm is 0.5 to 1.0 mm (0.02-0.04 in.) as shown in the figure.

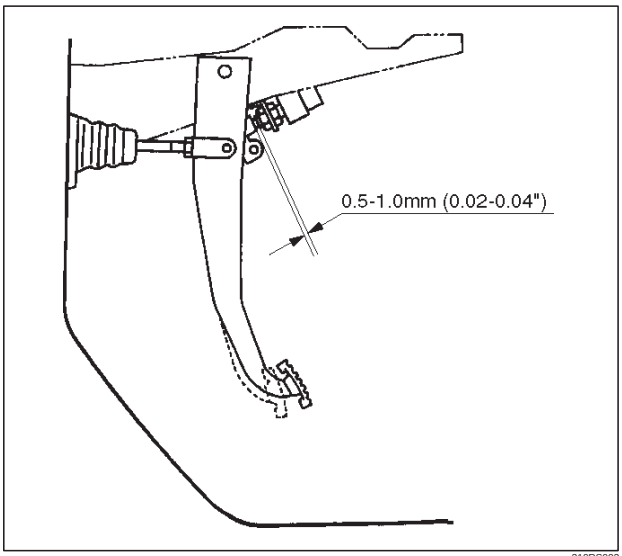

310RS003

Downloaded from www.Manualslib.com manuals search engine

Adjustment

1. Check to be sure that the brake pedal (3) has been completely returned by the return spring.
2. Disconnect the switch connector.
3. Loosen the lock nut (1) of the switch (2).
4. Turn the switch clockwise until the tip of screw portion of the brake pedal hits the pedal arm.
5. Turn the switch counterclockwise until the clearance between the tip of the screw portion and the pedal arm becomes 0.5 to 1.0 mm (0.02-0.04 in).
6. Tighten the lock nut.
7. Connect the switch connector.

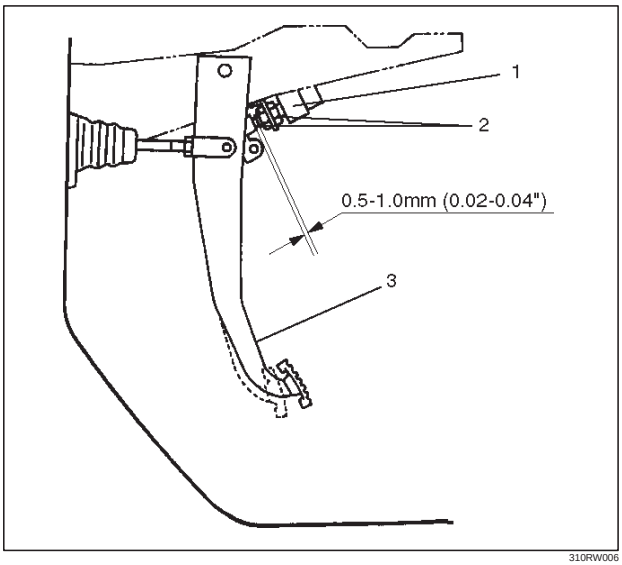

310RW006

Clutch Switch

Removal and Installation

Refer to the Clutch Control removal and installation steps in Clutch section.

Adjustment

1. Check to be sure that the clutch pedal (1) has been completely returned by the return spring.
2. Disconnect the switch connector.
3. Loosen the lock nut (2) of the switch (3).
4. Push the switch by hand until the push rod cannot be seen from the tip portion of the switch.
5. Give the switch one reverse rotation.
6. Tighten the lock nut.
7. Connect the switch connector.

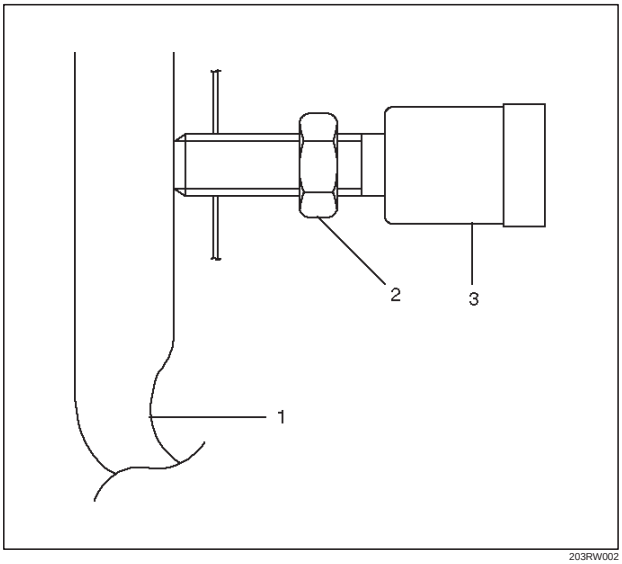

203RW002

Downloaded from www.Manualslib.com manuals search engine

Starter Switch

Removal

1. Disconnect the battery ground cable.
2. Remove the front console assembly (1). Refer to the Instrument Panel Assembly in Body Structure section.
3. Remove the lower cluster assembly (2). Refer to the Instrument Panel Assembly in Body Structure section.
4. Remove the instrument panel driver lower cover assembly (3). Refer to the Instrument Panel Assembly in Body Structure section.

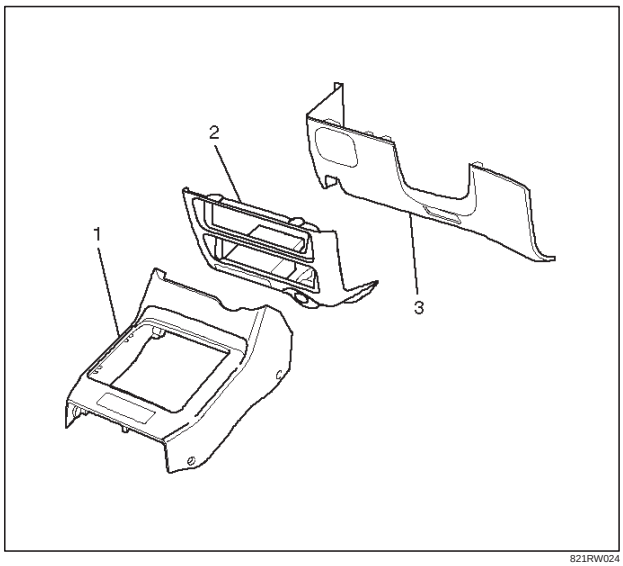

821RW024

5. Remove seven screws to remove the steering cowl (6).
6. Disconnect the connector, remove the screw (4) and then remove the starter switch (5).

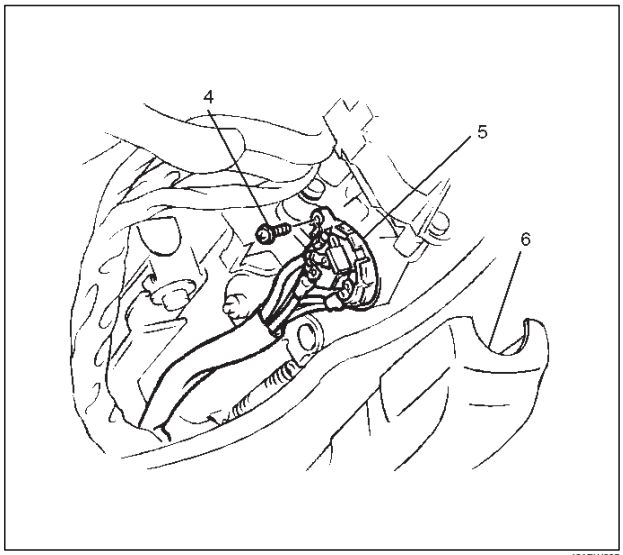

431RW005

Installation

To install, follow the removal steps in the reverse order, noting the following point.

1. When installing the steering cowl (10), be sure to pass the harnesses through the route as shown in the figure so that the starter switch harness (7), the combination switch harness (8) and the inflator module harness (9) will not catch.

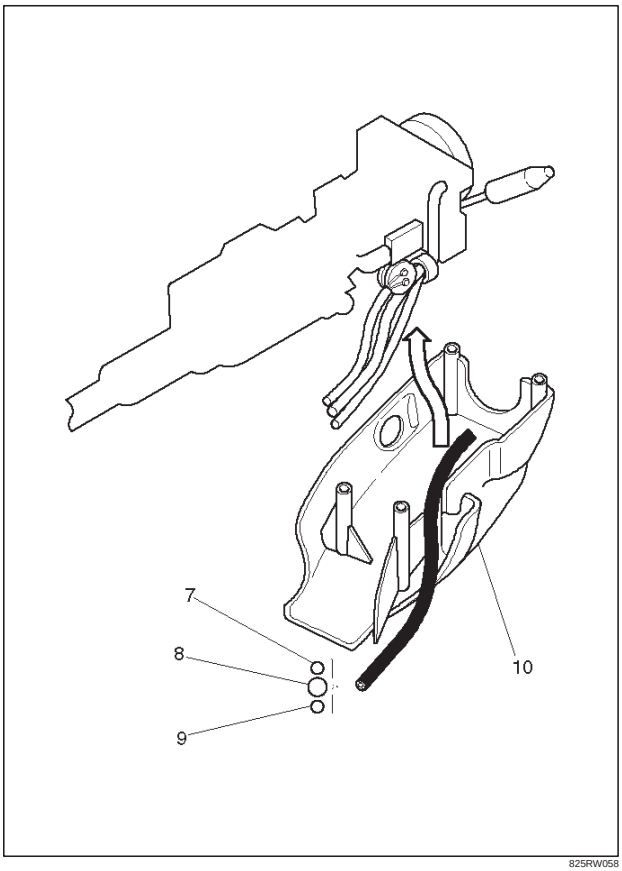

825RW058

Downloaded from www.Manualslib.com manuals search engine

Cruise Control Main Switch

Removal

1. Disconnect the battery ground cable.
2. Remove the front console assembly (1). Refer to the Instrument Panel Assembly in Body Structure section.
3. Remove the lower cluster assembly (2). Refer to the Instrument Panel Assembly in Body Structure section.
4. Remove the instrument panel driver lower cover assembly (3). Refer to the Instrument Panel Assembly in Body Structure section.

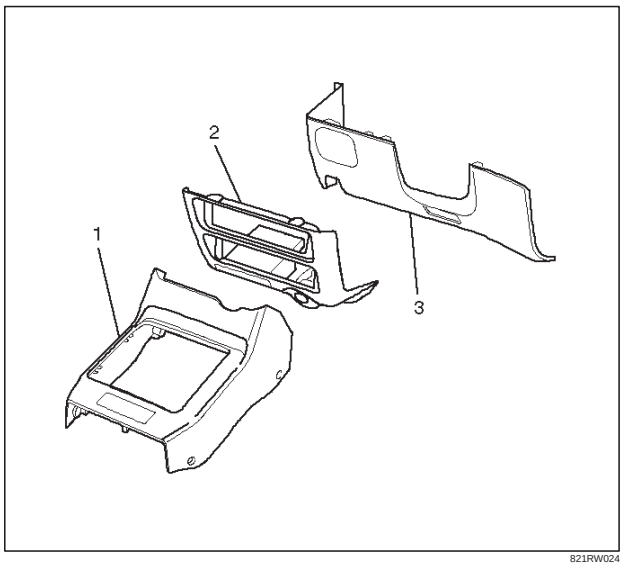

821RW024

5. Remove the instrument panel cluster assembly (5). Refer to the Instrument Panel Assembly in Body Structure section.
6. Disconnect the and push the lock from the side of the instrument panel cluster assembly to remove the cruise control main switch (4).

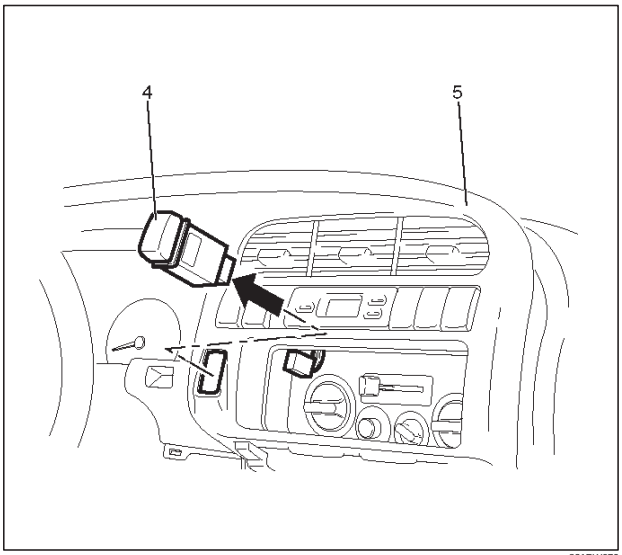

821RW079

Installation

To install, follow the removal steps in the reverse order, noting the following point.

1. Push in the switch with your fingers until the switch is locked securely.

Cruise Control Switch (Combination Switch)

Removal and Installation

Refer to the Lighting Switch (Combination Switch) removal and installation steps of Lighting System in Body and Accessories section.

Powertrain Control Module (PCM)

Removal and Installation

Refer to Powertrain Control Module (PCM) in Engine section.

Mode Switch

Removal and Installation

Refer to the Mode Switch removal and installation steps in Automatic Transmission section.

Downloaded from www.Manualslib.com manuals search engine

Diagnosis

Cruise control system is controlled by the PCM as well as 6VE1 engine and automatic transmission. DTC codes are stored in the PCM if troubles occur in the circuit. DTC codes categorized “type D” are shown only by the Tech 2 scan tool. The following chart only shows some typical DTCs for cruise control system. Refer to PCM Diagnostic Trouble Codes in Driveability and Emissions for entire DTC diagnosis.

DTC	TROUBLE PART	DTC TYPE	MAJOR CONDITION OF TROUBLE	DIAGNOSIS PERIOD
P0565	CRUISE MAIN CIRCUIT	D	• THE SWITCH CONTACT REMAINS ON FOR 15 SECONDS OR MORE. • NOISES ARE GENERATED BY THE POOR SWITCH CONTACT 60 TIMES WITHIN 1 SECOND.	DIAGNOSIS IS ENABLED IN 130 SECONDS AFTER THE SWITCH OPERATED.
P0566	CRUISE CANCEL CIRCUIT	D	• THE SWITCH CONTACT REMAINS ON FOR 40 SECONDS OR MORE. • NOISES ARE GENERATED BY THE POOR SWITCH CONTACT 100 TIMES WITHIN 1.6 SECONDS.	DIAGNOSIS IS ENABLED IN 120 SECONDS AFTER THE SWITCH OPERATED.
P0567	CRUISE RESUME CIRCUIT	D	• THE SWITCH CONTACT REMAINS ON FOR 50 SECONDS OR MORE. • NOISES ARE GENERATED BY THE POOR SWITCH CONTACT 100 TIMES WITHIN 1.6 SECONDS.	DIAGNOSIS IS ENABLED IN 110 SECONDS AFTER THE SWITCH OPERATED.
P0568	CRUISE SET CIRCUIT	D	• THE SWITCH CONTACT REMAINS ON FOR 120 SECONDS OR MORE. • NOISES ARE GENERATED BY THE POOR SWITCH CONTACT 100 TIMES WITHIN 1.6 SECONDS.	DIAGNOSIS IS ENABLED IN 125 SECONDS AFTER THE SWITCH OPERATED.

DTC: Diagnostic Trouble Code

NOTE: The DTCs are detected while the engine is running

Downloaded from www.Manualslib.com manuals search engine